* This publication supersedes TM 9-2320-260-20-1, TM 9-2320-260-20-2-1, TM 9-2320-260-20-2-2, TM 9-2320-260-20-3-1, TM 9-2320-260-20-3-2, TM 9-2320-260-20-3-3, and TM 9-2320-260-20-3-4, dated 12 January 1981, for M809 Series Trucks.

TECHNICAL MANUAL

UNIT MAINTENANCE

5-TON, 6X6, M809 SERIES TRUCKS (DIESEL)

TRUCK, CARGO: 5-TON, 6X6
M813 (2320-00-050-8902) (EIC:BSB);
(2320-00-050-8890) (EIC:BSA)
M813A1 (2320-00-050-8913) (EIC:BSD);
[2320-00-050-8905) (EIC:BSC)
M814 {2320-00-050-8988) (EIC:BSK);
(2320-00-050-8987) (EIC:BSJ)

TRUCK, BOLSTER, LOGGING: 5-TON, 6X6
M815 (2320-00-050-8927) (EIC:BSE)

TRUCK, WRECKER, MEDIUM 5-TON, 6X6
M816 [2320-00-051-0489) (EIC:BSQ)

TRUCK, DUMP: 5-TON, 6X6
M817 (2320-00-050-8970) (EIC:BSF);
(2320-00-051-0589) (EIC:BSR)

TRUCK, TRACTOR 5-TON, 6X6
M818 (2320-00-050-8984) (EIC:BSH);
(2320-00-050-8978) (EIC:BSG)

TRUCK, TRACTOR, WRECKER 5-TON, 6X6
M819 (2320-00-050-9004) (EIC:BSL)

TRUCK, VAN, EXPANSIBLE: 5-TON, 6X6
M820 {2320-00-050-9006) (EIC:BSM)
M820A1 (2320-00-050-9007)
M820A2 (2320-00-050-9010) (EIC:BSN)

TRUCK, STAKE, BRIDGE TRANSPORTING: 5-TON, 6X6
M821 [2320-00-050-9015) [EIC:BSP)

DISTRIBUTION STATEMENT A. Approved for public release; distribution is unlimited.

HOW TO USE THIS MANUAL v
INTRODUCTION 1-1
SERVICE AND TROUBLESHOOTING INSTRUCTIONS 2-1
ENGINE SYSTEMS MAINTENANCE 3-1
ELECTRICAL SYSTEM MAINTENANCE 4-1
TRANSMISSION MAINTENANCE 5-1
TRANSFER CASE SYSTEM MAINTENANCE 6-1
PROPELLER SHAFTS, AXLES, AND SUSPENSION SYSTEM MAINTENANCE 7-1
MECHANICAL PARKING BRAKE, COMPRESSED AIR, AND SERVICE BRAKE SYSTEM MAINTENANCE 8-1
WHEELS, HUBS, DRUMS, AND STEERING SYSTEM MAINTENANCE 9-1
FRAME MAINTENANCE 10-1
BODY, CAB, AND ACCESSORIES MAINTENANCE 11-1
SPECIAL PURPOSE BODIES MAINTENANCE 12-1
HOIST, WINCH, CRANE, AND POWER TAKEOFF MAINTENANCE 13-1
SPECIAL PURPOSE KITS MAINTENANCE 14-1
SHIPMENT AND LIMITED STORAGE 15-1

DEPARTMENTS OF THE ARMY AND THE AIR FORCE
APRIL 1995

WARNING

EXHAUST GASES CAN KILL

1. DO NOT operate your vehicle engine in enclosed area.
2. DO NOT idle vehicle engine with cab windows closed.
3. DO NOT drive vehicle with inspection plates or cover plates removed.
4. BE ALERT at all times for exhaust odors.
5. BE ALERT for exhaust poisoning symptoms. They are:
   - Headache
   - Dizziness
   - Sleepiness
   - Loss of muscular control
6. If YOU SEE another person with exhaust poisoning symptoms:
   - Remove person from area
   - Expose to open air
   - Keep person warm
   - Do not permit person to move
   - Administer artificial respiration, if necessary*

* For artificial respiration, refer to FM 21-11.

WARNING SUMMARY

- Drycleaning solvent is flammable and will not be used near open flame. Use only in well-ventilated places. Failure to do so may result in injury to personnel.
- Do not perform battery system checks or inspections near open flame. Injury to personnel may result.
- Diesel fuel is highly flammable. Do not perform troubleshooting checks near open flame. Injury to personnel may result.
- Compressed air source will not exceed 30 psi (207 kPa). When cleaning with compressed air, eyeshields must be worn. Failure to wear eyeshields may result in injury to personnel.
- Care should be taken when removing surge tank filler cap. Steam or hot coolant under pressure may cause injury to personnel.
- Do not perform this procedure while smoking or within 50 feet of sparks or open flame. Fuel is flammable and can explode easily, causing injury or death to personnel and damage to equipment.
- Do not use compressed air or dry brush for cleaning when working in areas of vehicle where asbestos brake lining dust may accumulate. Remove asbestos dust and other residue from these areas using a soft bristle brush or cloth soaked with water. Breathing asbestos dust may cause injury to personnel.
- Loosen outlet line at air compressor very slowly. Stop procedure and tighten fitting the moment air begins to escape. Injury to personnel may result if line is accidently disconnected from serviceable operating compressor.

WARNING SUMMARY (Contd)

- Do not look into service chamber vent port when performing test. Injury to personnel may result.
- Do not disconnect air lines before draining air reservoir. Small parts under pressure may shoot out with high velocity, causing injury to personnel.
- Do not look into limiting valve vent port when performing test. Injury to personnel may result.
- Wear protective mask and work in well-ventilated area when removing glaze from brakeshoes. Asbestos dust may form during glaze removal, causing harm to your health if inhaled.
- Loosen supply line at valve very slowly. Stop procedure and tighten fitting of supply line the moment air begins to escape. Injury to personnel may result if supply line is disconnected from valve.
- Loosen delivery line at valve very slowly. Stop procedure and tighten fitting of delivery line the moment air begins to escape. Injury to personnel may result if delivery line is disconnected from valve.
- Do not look into parking brake valve vent port when performing test. Injury to personnel may result.
- Battery acid (electrolyte) is extremely harmful. Always wear safety goggles and rubber gloves, and do not smoke when performing battery maintenance. Severe injury will result if acid contacts eyes or skin.
- Remove all jewelry such as rings, dog tags, bracelets, etc. If jewelry or disconnected battery ground cable contact battery terminal, a direct short can result, causing instant heating of tools, severe injury to personnel, or damage to equipment.
- When removing battery cables, disconnect ground cable first. Do not allow tools to come in contact with vehicle when disconnecting cable clamps. A direct short can result, causing instant heating of tools, injury to personnel, tool damage, battery damage, or battery explosion.
- Some vehicles have two separate wires and connectors. Mark wires for installation. Connecting wires on wrong terminals may cause fuel to ignite, resulting in injury to personnel.
- Do not perform testing near fuel tank with fill cap or sending unit removed. Fuel may ignite, causing injury to personnel.
- Do not drain oil when engine is hot. Injury to personnel may result.
- If NBC exposure is suspected, all air filter media should be handled by personnel wearing protective equipment. Consult your unit NBC officer or NBC NCO for appropriate handling or disposal instructions.
- NBC contaminated filters must be handled using adequate precautions (FM 21-40) and must be disposed of by trained personnel.
- Diesel fuel is flammable. Do not perform fuel system procedures near open flame. Injury to personnel may result.
- Do not touch hot exhaust system components with bare hands. Injury to personnel may result.
- Care must be taken while removing surge tank cap when engine temperature is above 175°F (79°C). Escaping steam or hot coolant may cause injury to personnel.
- Use caution when testing thermostat. Hot water may cause injury to personnel.
- Use care when removing fan blade. Failure to do so may cause injury to personnel.
- Eye protection must be worn when removing or installing springs under tension. Failure to do so may result in injury to personnel.
- Do not smoke, have open flame, or make sparks when performing battery maintenance. Batteries may explode, causing severe injury to personnel.
- Do not wear jewelry when repairing harnesses. Injury to personnel may result if circuit is suddenly energized.

WARNING SUMMARY (Contd)

- Brakeshoe springs are under high tension. Use brake spring pliers to replace brakeshoe retracting springs. Other tools may fail to hold spring, causing injury to personnel.
- When removing spring hanger pins, personnel must stand clear of spring ends. Tension may cause spring to snap out of hanger, resulting in injury to personnel.
- Leaves and plates of assembled spring are under tension. Release tension slowly. Failure to do this may result in injury to personnel.
- Eye protection is required when using wire brush for cleaning. Failure to do this may result in injury to personnel.
- Use of C-clamps on spring assembly places this unit under tension. Do not complete assembly until center screw nut is tightened to specification. Failure to do this may result in injury to personnel.
- When removing spring shackle pins, personnel must stand clear of spring ends. Tension may cause spring to snap out of shackle, causing injury to personnel.
- Ensure vehicle is firmly supported while spring seat is removed. Failure to do so may result in injury to personnel.
- Incorrect brakeshoe installation will prevent automatic adjusters from working. The longer radius end of brakeshoe web must ride on the adjustable plunger. Incorrect brakeshoe installation may cause vehicle brakes to fail, resulting in serious injury or death to personnel.
- Do not remove switch before draining air reservoirs. Small parts under pressure may shoot out with high velocity, causing injury to personnel.
- Do not work under vehicle that is supported by jack only. Jack may slip, causing vehicle to fall, and result in injury or death to personnel.
- Never remove tire lockring before deflating tire. Lockring may explode otY, causing injury or death to personnel.
- Lockring must be properly seated around wheel when installed. If lockring is not correctly installed, it may explode off when tire is inflated, causing injury or death to personnel.
- Never attempt to correct seating of lockring by hammering, striking, or forcing while tire is inflated. Lockring may explode off, causing injury or death to personnel.
- Never inflate a tire with tire Iockring facing personnel or without a tire inflation cage. Injury or death to personnel may result from exploding wheel components.
- Always use tire inflation equipment specified in TM 9-2610-200-24 and stand 10 ft (3.05 m) away from tire inflation cage while inflating tire. Injury or death may result from exploding wheel components.
- Never rest or lean against tire inflation cage while tire is being inflated. Injury or death to personnel may result.
- Keep fingers clear of hood and cowling when replacing hinge. Failure to do so may result in injury to personnel.
- Support cab body while in raised position for insulator replacement. Failure to do so may result in injury to personnel.
- All personnel must stand clear during lifting operations. A swinging or shifting load may cause injury to personnel.
- Ensure locking handles at forward end of dropsides are engaged before removing tailgate. Failure to do so may cause injury to personnel.
- Use eyeshields and gloves when removing and installing door window glass. Glass could shatter, causing injury to personnel.

WARNING SUMMARY (Contd)

- Support hinged roof panel before removing counterbalance cable. Failure to do so may cause injury to personnel.
- Wear hand protection when handling winch cable. Broken wires may cause injury to personnel.
- Never stand between vehicles. Assistant must remain in secondary vehicle to engage service brakes if cable snaps or automatic brake fails. Failure to do this may result, in injury to personnel.
- A minimum of four turns of cable must remain on winch drum at all times. Failure to do this may result in injury to personnel or damage to equipment.
- Always use hand throttle to control engine speed when operating winch. Avoid sudden changes in speed. Rough or jerky operations may cause a shearpin to break or cable to snap. Damage to vehicle or injury to personnel may result.
- Brakeband cover and adjustment screw maybe too hot to proceed with this task. If cover and screw are too hot, allow them to cool before continuing with adjustment. Failure to do this may result in injury to personnel.
- Do not remove slave receptacle before disconnecting battery ground cables. If energized battery cables contact cab, a direct short will result and may cause injury to personnel.
- Cleaning solvents are flammable and will not be used near open flame. Use only in well-ventilated places. Failure to do so may result in injury to personnel.
- Stay clear of moving parts while engine is running. Failure to do so may result in injury or death to personnel.
- Do not operate a deadline vehicle without preliminary inspection. Failure to do so may cause further damage to a disabled component and possible injury to personnel.
- Do not use a dry brush or compressed air to clean brakeshoes. There maybe asbestos dust on brakeshoes which can be dangerous to your health if you breathe it. (Brakeshoes must be wet; use a soft bristle brush.)

* ARMY TM 9-2320-260-20
AIR FORCE TO 36A12-lC-491

TECHNICAL MANUAL
NO. 9-2320-260-20

TECHNICAL ORDER
No. 36A12-lC-491

DEPARTMENTS OF THE ARMY
AND THE AIR FORCE

WASHINGTON, D.C. 28 April 1995

TECHNICAL MANUAL
UNIT MAINTENANCE
FOR
5-TON, 6X6, M809 SERIES TRUCKS
(DIESEL)

Model		NSN Without Winch (EIC)	NSN With Winch (EIC)
Truck, Cargo	M813	2320-00-050-8902 (BSB)	2320-00-050-8890 (BSA)
	M813A1	2320-00-050-8913 (BSD)	2320-00-050-8905 (BSC)
	M814	2320-00-050-8988 (BSK)	2320-00-050-8987 (BSJ)
Truck, Bolster, Logging	M815		2320-00-050-8927 (BSE)
Truck, Wrecker, Medium	M816		2320-00-051-0489 (BSQ)
Truck, Dump	M817	2320-00-050-8970 (BSF)	2320-00-051-0589 (BSR)
Truck, Tractor	M818	2320-00-050-8984 (BSH)	2320-00-050-8978 (BSG)
Truck, Tractor, Wrecker	M819		2320-00-050-9004 (BSL)
Truck, Van, Expansible	M820	2320-00-050-9006 (BSM)	
	M820A1	2320-00-050-9007	
	M820A2	2320-00-050-9010 (BSN)	
Truck, Stake, Bridge Transporting	M821		2320-00-050-9015 (BSP)

* This publication supersedes TM 9-2320-260-20-1, TM 9-2320-260-20-2-1, TM 9-2320-260-20-2-2, TM 9-2320-260-20-3-1, TM 9-2320-260-20-3-2, TM 9-2320-260-20-3-3, and TM 9-2320-260-20-3-4, dated 12 January 1981, for M809 Series Trucks.

DISTRIBUTION STATEMENT A. Approved for public release; distribution is unlimited.

REPORTING OF ERRORS

You can help improve this manual. If you find any mistakes or if you know of a way to improve the procedures, please let us know. Mail your letter, DA Form 2028 (Recommended Changes to Publications and Blank Forms), or DA Form 2028-2 located in back of this manual direct to: Commander, U.S. Army Tank-Automotive Command, ATTN: AMSTA-MB, Warren, Michigan 48397-5000. A reply will be furnished to you.

		Page
	HOW TO USE THIS MANUAL	v
CHAPTER 1	INTRODUCTION	1-1
Section I.	General Information	1-1
II.	Equipment Description and Data	1-3
III.	Principles of Operation	1-36
CHAPTER 2	SERVICE AND TROUBLESHOOTING INSTRUCTIONS	2-1
Section I.	Repair Parts, Special Tools, TMDE, and Support Equipment	2-1
II.	Service Upon Receipt	2-1
III.	Preventive Maintenance Checks and Services (PMCS)	2-2
IV.	Mechanical Systems Troubleshooting	2-66
V.	Compressed Air and Air-Hydraulic Brake System Troubleshooting	2-88
VI.	Electrical Systems Troubleshooting	2-96
VII.	STE/ICE Troubleshooting (Simplified Test Equipment for Internal Combustion Engines)	2-186
CHAPTER 3	ENGINE SYSTEMS MAINTENANCE	3-1
Section I.	Engine Lubrication System Maintenance	3-1
II.	Clutch System Maintenance	3-16
III.	Air Intake System Maintenance	3-23
IV.	Fuel System Maintenance	3-32
V.	Accelerator System Maintenance	3-68
VI.	Exhaust System Maintenance	3-74
VII.	Cooling System Maintenance	3-84
CHAPTER 4	ELECTRICAL SYSTEM MAINTENANCE	4-1
Section I.	Charging System Maintenance	4-1
II.	Starting System Maintenance	4-10
III.	Instruments, Sending Units, Switches, and Horn Maintenance	4-13
IV.	Lighting System Maintenance	4-66
V.	Battery System Maintenance	4-90
VI.	Wiring Circuits and Harness Maintenance	4-106

CHAPTER 5 TRANSMISSION MAINTENANCE 5-1

CHAPTER 6 TRANSFER CARE SYSTEM MAINTENANCE 6-1

CHAPTER 7 PROPELLER SHAFTS, AXLES, AND SUSPENSION SYSTEM MAINTENANCE 7-1

Section I. Propeller Shafts Maintenance 7-1
II. Front and Rear Axle Maintenance 7-13
III. Front and Rear Suspension Maintenance 7-27

CHAPTER 8 MECHANICAL PARKING BRAKE, COMPRESSED AIR, AND SERVICE BRAKE SYSTEM MAINTENANCE 8-1

Section I. Mechanical Parking Brake Maintenance 8-1
II. Service Brakes and Hydraulic System Maintenance 8-13
III. Compressed Airand Brake System Maintenance 8-38

CHAPTER 9 WHEELS, HUBS, DRUMS, AND STEERING SYSTEM MAINTENANCE 9-1

Section I. Wheels, Hubs, and Drums Maintenance 9-1
II. Steering System Maintenance 9-21

CHAPTER 10 FRAME MAINTENANCE 10-1

CHAPTER 11 BODY, CAB, AND ACCESSORIES MAINTENANCE 11-1

Section I. Bodyand Cab Maintenance 11-1
II. Accessorie sItemsMaintenance 11-67

CHAPTER 12 SPECIAL PURPOSE BODIES MAINTENANCE 12-1

Section I. Cargo Body Maintenance 12-1
II. Dump Body Maintenance 12-21
III. Van Body Maintenance 12-34
IV. Wrecker Body Maintenance 12-101
V. Tractor Wrecker Body Maintenance 12-116
VI. Bolster Body Maintenance 12-122
VII. Tractor Body Maintenance 12-130

CHAPTER 13 HOIST, WINCH, CRANE, AND POWER TAKEOFF MAINTENANCE 13-1

Section I. Hoist and Winch Maintenance 13-1
II. Power Divider Maintenance 13-123
III. Power Takeoff Maintenance 13-134

CHAPTER 14 SPECIAL PURPOSE KITS MAINTENANCE 14-1

Section I. Winterization Kits Maintenance. 14-1
II. Deepwater Fording Kit Maintenance 14-52
III. A-Frame Kit Maintenance 14-58
IV. Mounting Kit Maintenance 14-62
V. Mini Lighting Kit Maintenance 14-72
VI. 100-Amp Alternator Kit Maintenance 14-78
VII. Troop Seat and Seatbelt Kits Maintenance 14-84
VIII. Hand Airbrake Kit Maintenance 14-90
IX. Tachograph Kit Maintenance 14-92
X. Convoy Warning Light Kit Maintenance 14-96
XI. Van Cable Reel Kit Maintenance 14-116

CHAPTER 15 SHIPMENT AND LIMITED STORAGE 15-1

Section I. General Preparation of Truck for Shipment 15-1
II. Loading and Movement 15-2
III. Limited Storage 15-2

APPENDIX A REFERENCES A-1
APPENDIX B MAINTENANCE ALLOCATION CHART B-1
APPENDIX C EXPENDABLE/DURABLE SUPPLIES AND MATERIALS LIST C-1
APPENDIX D TORQUE LIMITS D-1
APPENDIX E SCHEMATIC AND WIRING DIAGRAMS E-1
INDEX . . . . . Index 1

HOW TO USE THIS MANUAL

ABOUT YOUR MANUAL

Spend some time looking through this manual. You'll find that it has a new look, different than most of the TM's you've been using.

New features added to improve the convenience of this manual and increase your efficiency are:

a. **Accessing Information –** These include features such as the bleed-to-edge locators on the cover and edge of the manual. Extensive troubleshooting guides for specific systems lead directly to step-by-step directions for problem solving and maintenance tasks.

b. **Illustrations –** A variety of methods are used to make locating and fixing components much easier. Locator illustrations with keyed text, exploded views, and cut-away diagrams make the information in this manual easier to understand and follow.

c. **Modification or Special Purpose Kits –** M809 series vehicles can be updated with modification kits or equipped with special purpose kits. They allow the vehicle to operate more efficiently or perform a special function. Sometimes the vehicle being worked on doesn't exactly match the maintenance procedure in this manual because the proper kit has not been installed. Refer to troubleshooting sections in chapter 2 to find troubleshooting instructions or a reference to kit installation instructions.

d. **Keying Text With Illustrations –** Illustration and text are located on facing pages that show the specific task you are working on. In some cases, the task steps and illustrations are located side by side. Continue reading for an example of modular text and illustrations.

e. **General Features -** Your TM is the best source available for providing information and data critical to vehicle operation and maintenance:

- Safety summary (warning pages a, b, c, and d)
- General information, equipment description, and data (chapter 1, sections I and II)
- Principles of operation (chapter 1, section III)
- Preventive Maintenance Checks and Services – PMCS (chapter **2,** section III)
- Systems Troubleshooting (chapter 2, sections IV, V, VI, and VII)
- Detailed maintenance procedures (chapters 3 through 14)
- Shipment and limited storage (chapter 15, sections I, II, and III)
- References (appendix A)
- Maintenance Allocation Chart – MAC (appendix B)
- Expendable/durable supplies and materials list (appendix C)
- Torque limits (appendix D)
- Schematic and Wiring Diagrams (appendix E)

Atypical example of how to use this manual is provided on the following pages.

USING YOUR MANUAL: AN EXAMPLE

TASK: The operator of a M809 series vehicle, model number M813A1, has complained of excessive exhaust noise and exhaust fumes entering the cab of his vehicle. The vehicle has been assigned to you for repair.

TROUBLESHOOTING STEPS:

1. Look at the cover of this manual. You'll see chapter/section titles listed from top to bottom on the right-hand side.
2. Look at the right-edge of the manual. On some of the pages you'll see edge indicators (black bars) that are alined with the chapter/section bars on the cover. These are the locations of the chapters/sections in the text.
3. Look for "SERVICE AND TROUBLESHOOTING INSTRUCTIONS" in the chapter list on the cover. This is where the troubleshooting information is located.
4. Turn to those pages with the edge indicator matching the black bar for service and troubleshooting instructions. Page numbers are also listed next to chapter/section titles.
5. Chapter 2 is divided into seven sections:
   - Section I - Repair Parts, Special Tools, TMDE, and Support Equipment
   - Section II - Service Upon Receipt
   - Section III - Preventive Maintenance Checks and Services (PMCS)
   - Section IV - Mechanical Systems Troubleshooting
   - Section V - Compressed Air and Air-Hydraulic Brake System Troubleshooting
   - Section VI - Electrical Systems Troubleshooting
   - Section VII - STE/ICE Troubleshooting
6. Turn to section IV, "MECHANICAL SYSTEMS TROUBLESHOOTING" (page 2-22). This troubleshooting section is system-oriented and is broken down into 23 major vehicle systems.
7. One of the first pages of this section is the "MECHANICAL TROUBLESHOOTING SYMPTOM INDEX" (turn to page 2-23).
8. Look down the list until you find "EXHAUST SYSTEM." Beneath that heading you will find the symptoms noted by the vehicle operator: "Excessive exhaust noise" and "Exhaust fumes in cab."
9. Turn to the page indicated: 2-30.

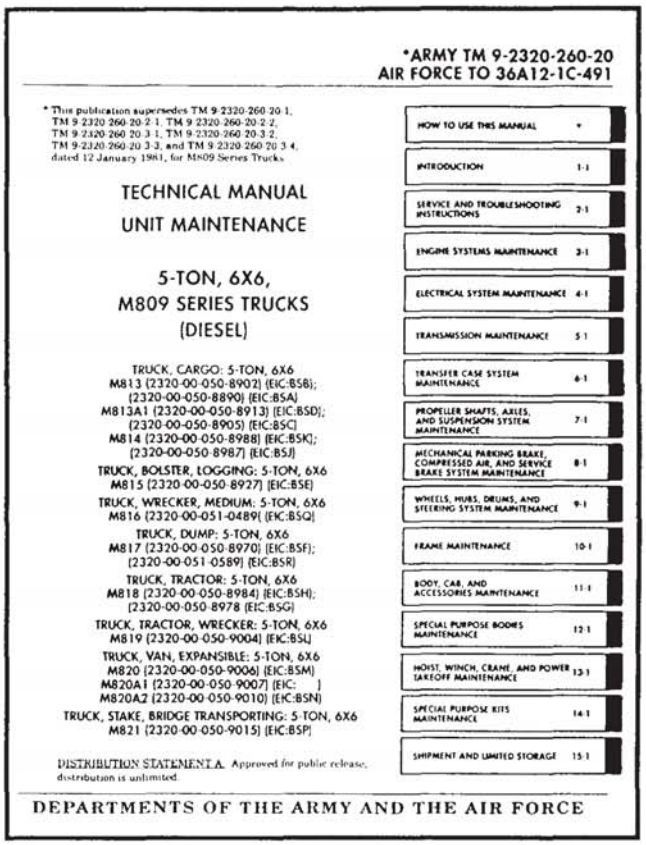

*ARMY TM 9-2320-260-20
AIR FORCE TO 36A12-1C-491

* This publication supersedes TM 9-2320-260-20-1, TM 9-2320-260-20-2-1, TM 9-2320-260-20-2-2, TM 9-2320-260-20-3-1, TM 9-2320-260-20-3-2, TM 9-2320-260-20-3-3, and TM 9-2320-260-20-3-4, dated 12 January 1981, for M809 Series Trucks.

TECHNICAL MANUAL
UNIT MAINTENANCE

5-TON, 6X6,
M809 SERIES TRUCKS
(DIESEL)

TRUCK, CARGO: 5-TON, 6X6
M813 (2320-00-050-8902) (EIC:BSB);
(2320-00-050-8890) (EIC:BSA)
M813A1 (2320-00-050-8913) (EIC:BSD);
(2320-00-050-8905) (EIC:BSC)
M814 (2320-00-050-8988) (EIC:BSK);
(2320-00-050-8987) (EIC:BSJ)
TRUCK, BOLSTER, LOGGING: 5-TON, 6X6
M815 (2320-00-050-8927) (EIC:BSE)
TRUCK, WRECKER, MEDIUM: 5-TON, 6X6
M816 (2320-00-051-0489) (EIC:BSQ)
TRUCK, DUMP: 5-TON, 6X6
M817 (2320-00-050-8970) (EIC:BSF);
(2320-00-051-0589) (EIC:BSR)
TRUCK, TRACTOR: 5-TON, 6X6
M818 (2320-00-050-8984) (EIC:BSH);
(2320-00-050-8978 (EIC:BSG)
TRUCK, TRACTOR, WRECKER: 5-TON, 6X6
M819 (2320-00-050-9004) (EIC:BSL)
TRUCK, VAN, EXPANSIBLE: 5-TON, 6X6
M820 (2320-00-050-9006) (EIC:BSM)
M820A1 (2320-00-050-9007) (EIC:)
M820A2 (2320-00-050-9010) (EIC:BSN)
TRUCK, STAKE, BRIDGE TRANSPORTING: 5-TON, 6X6
M821 (2320-00-050-9015) (EIC:BSP)

DISTRIBUTION STATEMENT A. Approved for public release, distribution is unlimited.

HOW TO USE THIS MANUAL	*
INTRODUCTION	1-1
SERVICE AND TROUBLESHOOTING INSTRUCTIONS	2-1
ENGINE SYSTEMS MAINTENANCE	3-1
ELECTRICAL SYSTEM MAINTENANCE	4-1
TRANSMISSION MAINTENANCE	5-1
TRANSFER CASE SYSTEM MAINTENANCE	6-1
PROPELLER SHAFTS, AXLES, AND SUSPENSION SYSTEM MAINTENANCE	7-1
MECHANICAL PARKING BRAKE, COMPRESSED AIR, AND SERVICE BRAKE SYSTEM MAINTENANCE	8-1
WHEELS, HUBS, DRUMS, AND STEERING SYSTEM MAINTENANCE	9-1
FRAME MAINTENANCE	10-1
BODY, CAB, AND ACCESSORIES MAINTENANCE	11-1
SPECIAL PURPOSE BODIES MAINTENANCE	12-1
HOIST, WINCH, CRANE, AND POWER TAKEOFF MAINTENANCE	13-1
SPECIAL PURPOSE KITS MAINTENANCE	14-1
SHIPMENT AND LIMITED STORAGE	15-1

DEPARTMENTS OF THE ARMY AND THE AIR FORCE

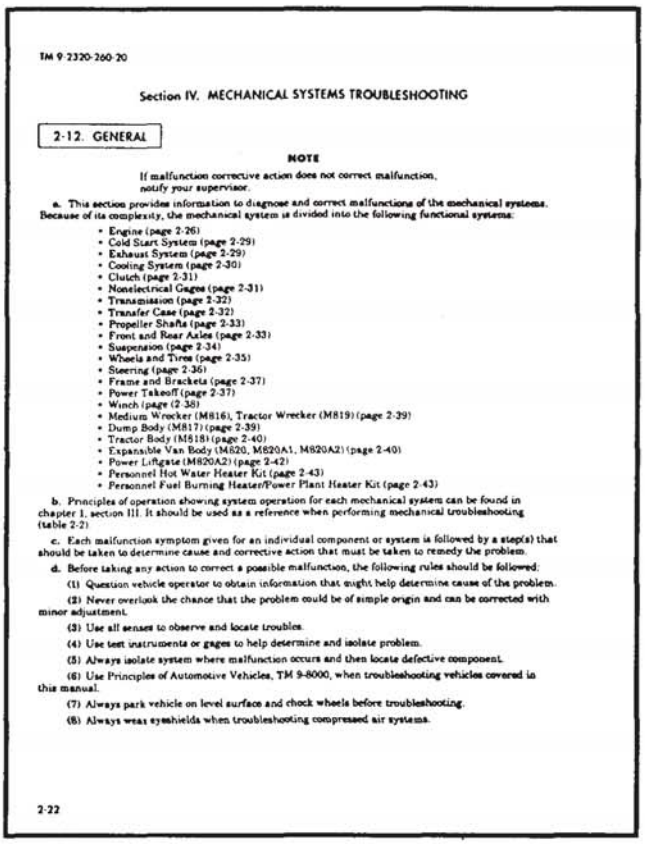

TM 9-2320-260-20

Section IV. MECHANICAL SYSTEMS TROUBLESHOOTING

2-12. GENERAL

NOTE

If malfunction corrective action does not correct malfunction, notify your supervisor.

a. This section provides information to diagnose and correct malfunctions of the mechanical systems. Because of its complexity, the mechanical system is divided into the following functional systems:

- Engine (page 2-26)
- Cold Start System (page 2-29)
- Exhaust System (page 2-29)
- Cooling System (page 2-30)
- Clutch (page 2-31)
- Nonelectrical Gages (page 2-31)
- Transmission (page 2-32)
- Transfer Case (page 2-32)
- Propeller Shafts (page 2-33)
- Front and Rear Axles (page 2-33)
- Suspension (page 2-34)
- Wheels and Tires (page 2-35)
- Steering (page 2-36)
- Frame and Brackets (page 2-37)
- Power Takeoff (page 2-37)
- Winch (page (2-38)
- Medium Wrecker (M816), Tractor Wrecker (M819) (page 2-39)
- Dump Body (M817) (page 2-39)
- Tractor Body (M818) (page 2-40)
- Expansible Van Body (M820, M820A1, M820A2) (page 2-40)
- Power Liftgate (M820A2) (page 2-42)
- Personnel Hot Water Heater Kit (page 2-43)
- Personnel Fuel Burning Heater/Power Plant Heater Kit (page 2-43)

b. Principles of operation showing system operation for each mechanical system can be found in chapter 1, section III. It should be used as a reference when performing mechanical troubleshooting (table 2-2).

c. Each malfunction symptom given for an individual component or system is followed by a step(s) that should be taken to determine cause and corrective action that must be taken to remedy the problem.

d. Before taking any action to correct a possible malfunction, the following rules should be followed:

(1) Question vehicle operator to obtain information that might help determine cause of the problem.

(2) Never overlook the chance that the problem could be of simple origin and can be corrected with minor adjustment.

(3) Use all senses to observe and locate troubles.

(4) Use test instruments or gages to help determine and isolate problem.

(5) Always isolate system where malfunction occurs and then locate defective component.

(6) Use Principles of Automotive Vehicles, TM 9-8000, when troubleshooting vehicles covered in this manual.

(7) Always park vehicle on level surface and chock wheels before troubleshooting.

(8) Always wear eyeshields when troubleshooting compressed air systems.

2-22

10. On page 2-30, step/test relating to resolving the problem of “Excessive exhaust noise” is listed:

    step 1. During your inspection, you discover that an exhaust pipe is cracked and rusted. The part must be replaced. Chapter 3, section VI is referenced.

11. Turn to the ‘TABLE OF CONTENTS” and find the chapter dealing with the engine. You find it as "CHAPTER 3, ENGINE SYSTEMS MAINTENANCE.” Furthermore, you note that the chapter is divided into seven sections. You are interested in “Section VI. Exhaust System Maintenance.”

NOTE: Before attempting to repair or replace the exhaust system, as a Unit mechanic, you must:

a. Determine the maintenance responsibility of repair or replacement of the component.

b. If the task is at your echelon of maintenance responsibility, you must identify the tools needed and the replacement parts required.

Refer to the Maintenance Allocation Chart - MAC (appendix B) to determine not only the maintenance responsibility of the item, but also to obtain an estimate of the time required to perform the task, tools needed, and any special notes/requirements necessary.

Refer to TM 9-2320-260-20P, Unit Maintenance Repair Parts and Special Tools List for M809 Series Vehicles, for requisition data concerning replacement parts for this task.

12. Turn to chapter 3, section VI, which covers "EXHAUST SYSTEM MAINTENANCE.” In the maintenance index we find that there are four paragraphs listed.

13. Paragraph 3-41 is a task for replacing the exhaust system used only on model M821 vehicles. All other M809 series vehicles will follow para. 3-40 for replacement of the exhaust system. Notice that, in this case, it starts on page 3-76.

14. The first two pages shown have procedures and illustrations for performing the removal steps for components of the exhaust system.

TM 9-2320-260-20

Table 2-2. Mechanical Troubleshooting (Contd).

MALFUNCTION TEST OR INSPECTION CORRECTIVE ACTION

Step 2. If problem persists, notify your supervisor.

END OF TESTING!

16. EXCESSIVE EXHAUST NOISE

Inspect exhaust pipes for secure connections, cracks, breaks, and excessive rust.

Replace damaged parts (chapter 3, section VI).

END OF TESTING!

17. EXHAUST FUMES IN CAB

Inspect exhaust manifold, exhaust pipes, muffler, and connections for leaks.

a. Replace damaged parts (chapter 3, section VI).

b. If exhaust manifold is leaking or damaged, notify your supervisor.

END OF TESTING!

COOLING SYSTEM

18. ENGINE COOLANT TEMPERATURE GAGE ABOVE 230°F (110°C).

WARNING

Care should be taken when removing surge tank filler cap. Steam or hot coolant under pressure may cause injury to personnel.

Step 1. Check coolant protection level with antifreeze tester.

CAUTION

Do not add coolant when engine is hot. Internal engine damage could result.

If coolant is not within safe range, service cooling system (para. 3-45).

Step 2. Inspect drivebelts and drive pulleys of accessories for damage and check belt tension.

a. Replace or adjust drivebelts (para. 3-52, 3-54, 4-4, or 9-16).

b. Replace accessory if drive pulley will not turn (para. 3-49, 3-55, 4-2, or 9-17).

Step 3. Inspect radiator, hoses and hose connections, drain valves, and surge tank for leaks.

a. Tighten hose clamps and fittings.

b. Replace defective cooling system components (chapter 3, section VII).

c. Tighten or close drain valves.

d. Replace leaking radiator (para. 3-50).

e. Replace leaking surge tank (para. 3-48).

Step 4. Inspect fan blade for broken or missing blades.

Replace fan blade (para. 3-53).

Step 5. Inspect radiator for bent fins and airflow obstructions.

Straighten bent fins, clear obstructions, or replace radiator (para. 3-50).

Step 6. Check cooling system for restriction.

Clean and flush system (para. 3-45).

Step 7. Check operation of temperature gage (table 2-4, electrical troubleshooting, malfunction 30).

Replace thermostat if condition continues (para. 3-47).

END OF TESTING!

2-30

TM 9-2320-260-20

Section VI. EXHAUST SYSTEM MAINTENANCE

3-39. EXHAUST SYSTEM MAINTENANCE INDEX

PARA. NO.	TITLE	PAGE NO.
3-40.	Vertical Exhaust Pipe Replacement	3-74
3-41.	Horizontal Exhaust Pipe Maintenance (M821)	3-76
3-42.	Exhaust Muffler Replacement	3-80
3-43.	Exhaust Muffler Bracket Maintenance	3-82

3-40. VERTICAL EXHAUST PIPE REPLACEMENT

THIS TASK COVERS:

a. Removal b. Installation

INITIAL SETUP

APPLICABLE MODELS
All

MATERIALS/PARTS
Two locking plates
Gasket
Ten locknuts
Antiseize compound (Appendix C, Item 5)

REFERENCES (TM)
TM 9-2320-260-10
TM 9-2320-260-20P

EQUIPMENT CONDITION
Parking brake set (TM 9-2320-260-10).

GENERAL SAFETY INSTRUCTIONS
Do not perform this task when exhaust system is hot.

WARNING

Do not touch hot exhaust system components with bare hands. Injury to personnel may result.

a. Removal

1. Remove two clamps (13) from exhaust pipe (22).
2. Remove four locknuts (26), screws (24), washers (23), two brackets (12), and exhaust shield (25) from exhaust pipe (22). Discard locknuts (26).
3. Remove two locknuts (4), washers (3), U-clamp (27), and exhaust stack (1) from bracket (2) and exhaust pipe (22). Discard locknuts (4).
4. Bend tabs of two locking plates (21) away from screws (20).
5. Remove four screws (20), two locking plates (21), exhaust pipe (22), and gasket (19) from right front fender (17) and muffler (18). Discard locking plates (21) and gasket (19).
6. Remove locknut (11), screw (6), two washers (7), springs (5), and bracket (2) from bracket (8). Discard locknut (11).
7. Remove locknut (15), screw (9), two locknuts (16), screws (10), and bracket (8) from gun mount bracket (14). Discard locknuts (15) and (16).

3-74

DETAILED MAINTENANCE PROCEDURES:

15. Detailed procedures: Include everything you must do to accomplish a basic maintenance task.

a. Before beginning the maintenance task, look through the procedure. You must familiarize yourself with the entire maintenance procedure before beginning the maintenance task. The entire procedure of paragraph 3-40: "VERTICAL EXHAUST PIPE MAINTENANCE" includes: a. Removal and b. Installation.

b. The eight basic headings listed under "INITIAL SETUP" outline special tools, materials, personnel requirements, and special conditions. Headings will not be listed if there are no entries. The headings are:

- **APPLICABLE MODELS** Any models that require that particular maintenance task.
- **TEST EQUIPMENT** Test equipment needed to complete a task.
- **SPECIAL TOOLS** Those special tools needed to complete a task. Common tools are not listed.
- **MATERIALS/PARTS** All parts or materials needed to complete a task.
- **PERSONNEL REQUIRED** The number of personnel needed to perform a task. If only one mechanic is needed, this heading will not be used. If you think that you need more help to correctly or safely complete a task (perhaps as the result of unusual conditions, etc.), alert your supervisor and ask for help.
- **REFERENCES (TM)** Those additional manuals needed to complete a task.
- **EQUIPMENT CONDITION** Notes the conditions that must exist before starting the task. For exhaust system replacement, the vehicle must have the parking brake set and the air cleaner element removed.
- **GENERAL SAFETY INSTRUCTIONS** Summarizes all safety warnings for the maintenance task.

c. A step-by-step maintenance procedure follows the "INITIAL SETUP" and gives detailed instructions for the procedure. These instructions give part name and action performed. The numbers in parentheses correspond to the part's callout number in the accompanying illustration. Warnings, cautions, and notes give additional information.

- **WARNINGS –** Indicate conditions, practices, or procedures which must be observed to avoid personnel injury, loss of life, or long-term health hazard.
- **CAUTIONS –** Indicate conditions, practices, or procedures which must be observed to avoid damage to equipment or destruction of equipment.
- **NOTES –** Include essential information of special importance, interest, or aid in job performance.

d. At the end of a procedure, "FOLLOW-ON TASKS" will list those additional tasks that must be performed to complete the procedure.

16. You can also use the Table of Contents (page ii) to find more information about the vehicle. For example: Principles of Operation in chapter 1.

17. Unit PMCS are presented in table 2-1 starting on page 2-4.

18. Chapter 2, section VII, STE/ICE Troubleshooting, can be used if STE/ICE is available for troubleshooting or PMCS.

19. Refer to TM 9-2320-260-20P, Unit Maintenance Repair Parts and Special Tools List for Truck, 5-Ton, 6x6, M809 Series, when requisitioning parts, special tools, and equipment for unit maintenance.

20. Your manual is easier to use once you understand its design. We hope it will encourage you to use it more often as an aid to maintenance support for M809 series vehicles.

CHAPTER 1
INTRODUCTION

Section I. General Information (page 1-1)
Section II. Equipment Description and Data (page 1-3)
Section III. Principles of Operation (page 1-36)

Section I. GENERAL INFORMATION

1-1. SCOPE

a. This technical manual contains information for unit maintenance of 5-ton, 6x6, M809 series vehicles.

b. Vehicle model numbers and equipment names covered are:

M813 Cargo Truck, W/W and WO/W
M813A1 Cargo Truck, W/W and WO/W (Dropside)
M814 Cargo Truck, W/W and WO/W (XLWB)
M815 Bolster Logging Truck, W/W
M816 Medium Wrecker Truck, W/W
M817 Dump Truck, W/W and WO/W
M818 Tractor Truck, W/W and WO/W
M819 Wrecker Tractor Truck, W/W
M820 and M820A1 Expansible Van Truck, WO/W
M820A2 Expansible Van Truck, WO/W (W/HLG)
M821 Bridge Transporting Stake Truck, WO/W

c. The 5-ton, 6x6, M809 series trucks are designed for transporting and retrieving materials and personnel.

1-2. MAINTENANCE FORMS, RECORDS, AND REPORTS

Department of the Army forms and procedures used for equipment maintenance will be those prescribed by DA Pam 738-750, The Army Maintenance Management System (TAMMS).

1-3. DESTRUCTION OF ARMY MATERIEL TO PREVENT ENEMY USE

Procedures for destruction of Army equipment to prevent enemy use can be found in TM 750-244-6.

1-4. PREPARATION FOR STORAGE OR SHIPMENT

Storage and limited storage instructions are in chapter 15 of this manual. Additional information can be found in TM 746-10, Marking, Packing and Shipment of Supplies and Equipment General Packaging Instructions for Field Use.

1-5. REPORTING EQUIPMENT IMPROVEMENT RECOMMENDATIONS (EIR's)

If the design of your vehicle needs improvement, let us know. If your vehicle is in proper operating condition and there are problems with vehicle or equipment performance, send us an EIR. You, the user, are the only one who can tell us what you don't like about your equipment. It is not necessary to show a new design or a better way to perform a procedure. Just let us know why you don't like the design or performance. Put it on an SF 368 (Quality Deficiency Report). Mail it to us at Commander, U.S. Army Tank-Automotive and Armaments Command, ATTN: AMSTA-IM-MMAA Warren, Michigan 48397-5000. We'll send you a reply.

1-6. EQUIPMENT IMPROVEMENT REPORT AND MAINTENANCE DIGEST (EIR MD)

The quarterly Equipment Improvement Report and Maintenance Digest, TB 43-0001-39 series, contains valuable field information on the equipment covered in this manual. The information in the TB 43-0001-39 series is compiled from some of the Equipment Improvement Reports that you prepared on the vehicles covered in this manual. Many of these articles resulted from comments, minor alterations, proposed Modification Work Orders (MWO's), actions taken on some of your DA form 2028's (Recommended Changes to Publications), and advance information on proposed changes that may affect this manual. The information will help you in doing your job better and will help in keeping you advised of the latest changes to this manual.

1-7. WARRANTY INFORMATION

The 5-ton, 6x6, M809 series Cummins diesel engine (model NHC-250), and Dana transmission (model 6453) are warranted in accordance with TB 9-2320-295-15/21. The warranty starts on the date, found in block 23, DA Form 2408-9, in the logbook. Report all defects in material or workmanship to your supervisor, who will take appropriate action.

Section II. EQUIPMENT DESCRIPTION AND DATA

1-8. GENERAL

The 5-ton, 6x6, M809 series trucks are tactical vehicles designed for use over all types of roads and cross-country terrain, in extreme high or low temperatures and humidity. All vehicles in this series are powered by a 240 horsepower Cummins, NHC-250 series diesel engine. A five-speed manual transmission and two-speed transfer case provide ten overall speed ranges. The trucks are capable of fording hard-bottom water crossings up to 30 inches (76.2 centimeters) without a deepwater fording kit, and 78 inches (198. 1 centimeters) with the kit All trucks are also equipped with a rear pintle hook for towing operations. Two front shackles and a pin on top of the rear springs provide a ready means of lifting the truck for transportation.

1-9. EQUIPMENT DESCRIPTION AND DATA INDEX

PARA. NO.	TITLE	PAGE NO.
1-10.	Equipment Characteristics, Capabilities, and Features	1-4
1-11.	Location and Description of Major External Components	1-10
1-12.	Location and Description of Major Internal Components	1-12
1-13.	Location and Contents of Warning, Caution, and Data Plates	1-14
1-14.	Differences Between Models	1-32
1-15.	Vehicle Performance Data	1-33

1-10. EQUIPMENT CHARACTERISTICS, CAPABILITIES, AND FEATURES

a. M813 Cargo Truck, W/W and WO/W.

PURPOSE: This model is used to transport cargo and troops. The M813 has permanent steel-welded sides, making it a preferred vehicle when transporting bulky or shifting loads. Side racks have built-in troop seats which may be positioned for troop transport operations. A bow and tarpaulin kit is available.

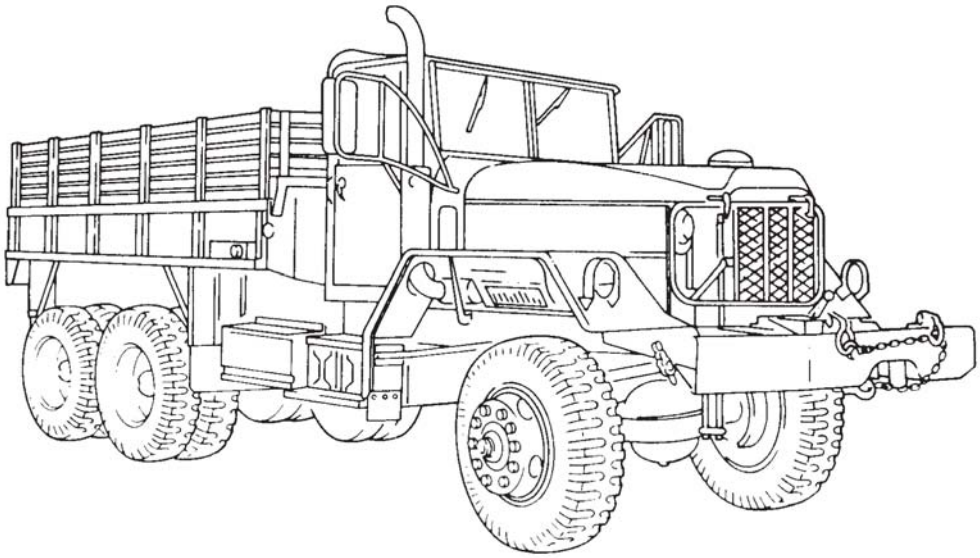

CARGO TRUCK (M813)

b. M813A1 Cargo Truck With Dropsides, W/W and WO/W.

PURPOSE: This model is used to transport cargo and troops. The hinged steel sides can be folded down or removed for easy loading and unloading operations. Side racks have built-in troop seats which may be positioned for troop transport operations. A bow and tarpaulin kit is available.

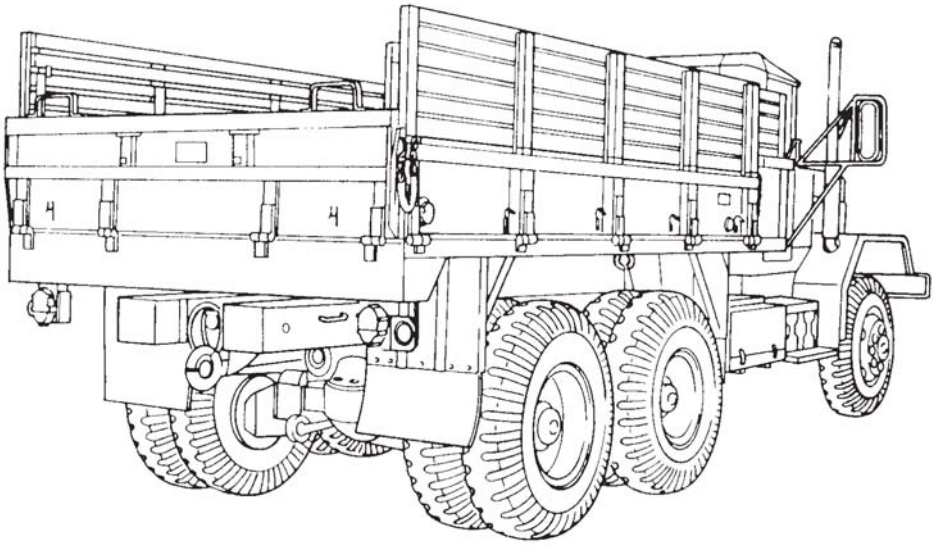

CARGO TRUCK, DROPSIDE (M813A1)

1-10. EQUIPMENT CHARACTERISTICS, CAPABILITIES, AND FEATURES (Contd)

c. M814 Cargo Truck With Extra Long Wheelbase (XLWB), W/W and WO/W.

PURPOSE: This model has the same load capacities as the M813 and M813A1. However, the M814 truck bed is 72 in. (183 cm) longer. This provides each vehicle with an additional 744 cu ft (20.8 cu m) of cargo space. 'hop seata maybe positioned for troop transport operations.

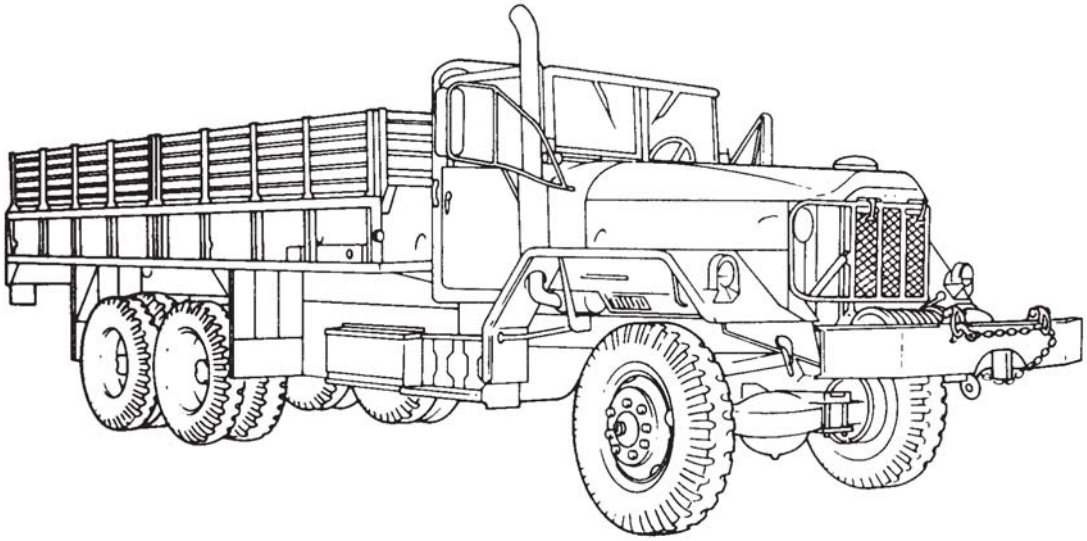

CARGO TRUCK (M814)

d. M815 Bolster Logging Truck, W/W.

PURPOSE: This model is used for transporting utility poles, bridge sections, and logs. It is equipped with a cab protector, front and midship winches, bolster assembly, and an adjustable M796 bolster trailer.

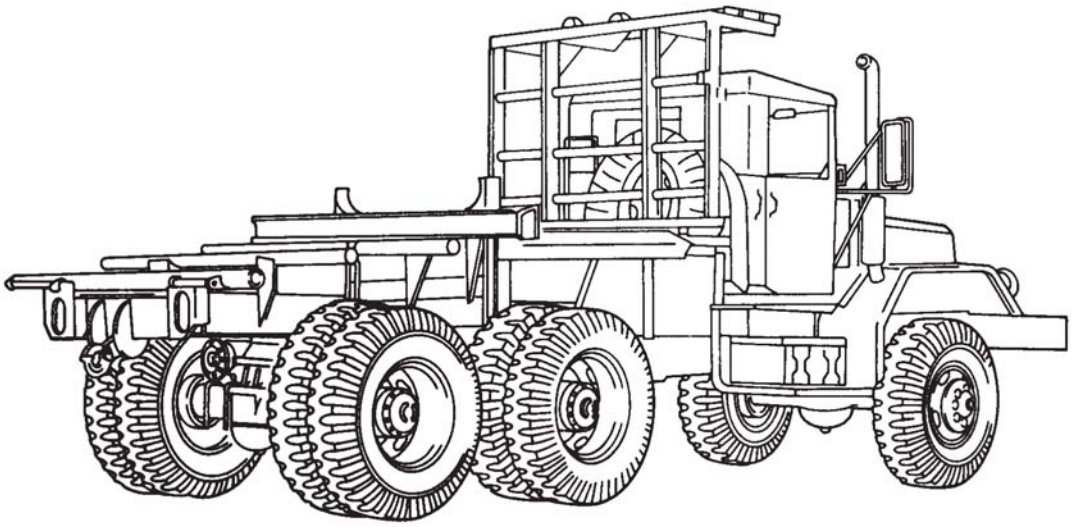

BOLSTER LOGGING TRUCK (M815)

1-10. EQUIPMENT CHARACTERISTICS, CAPABILITIES, AND FEATURES (Contd)

e. M816 Medium Wrecker Truck, W/W.

PURPOSE: This model is used for wrecker and salvage operations and has a revolving hydraulic crane with a self-supporting boom that can extend from 10-18 ft (3.05-5.49 m). Boom-to-ground supports are provided. Crane lifting capacity is 20,000 lb (9,080 kg). The vehicle is also equipped with a front winch [20,000 lb (9,080 kg) capacity] and rear winch [45,000 lb (20,430 kg) capacity] for freeing the vehicle when it becomes mired.

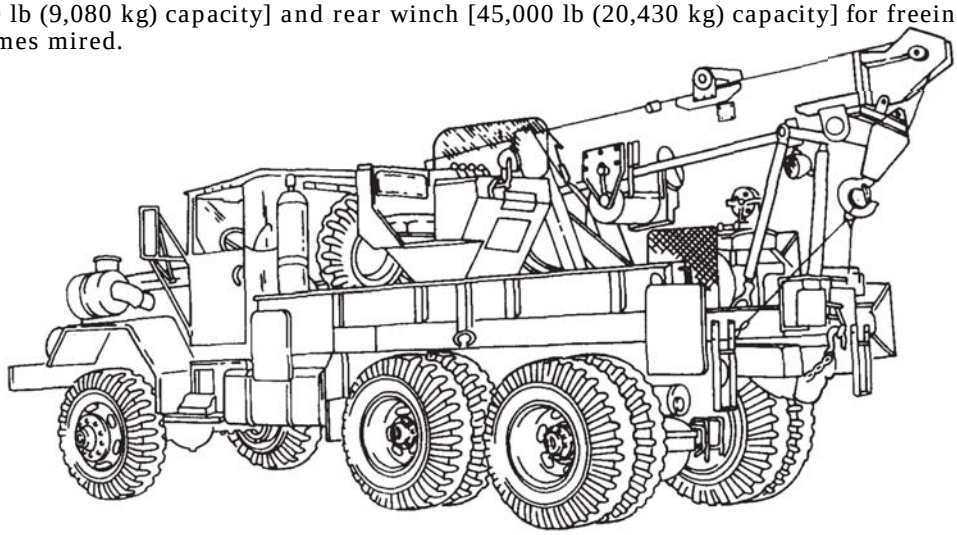

MEDIUM WRECKER TRUCK (M816)

f. M817 Dump Truck, W/W and WO/W.

PURPOSE: This model is used for hauling and dumping cargo. The body has provisions for installing side rack, troop seat, bow, and canvas kits for troop transport. It can haul up to 10,000 lb (4,540 kg) and tow up to 15,000 lb (6,810 kg) when fully loaded. The front end of the welded steel body extends up and over the vehicle cab to protect it from damage during loading operations.

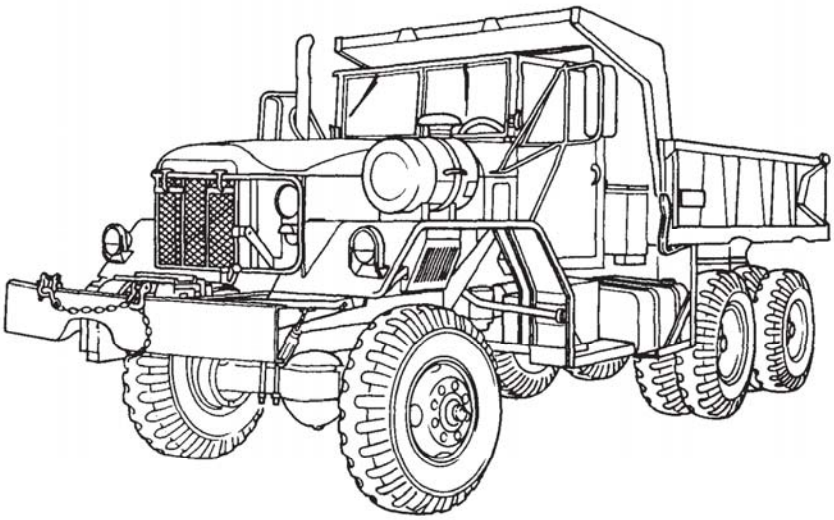

DUMP TRUCK (M817)

1-10. EQUIPMENT CHARACTERISTICS, CAPABILITIES, AND FEATURES (Contd)

g. M818 Tractor Truck, W/W and WO/W.

PURPOSE: This model is equipped with a fifth wheel and is used to transport semitrailers. The fifth wheel is capable of pivoting up to 21 degrees up, 15 degrees down, or 7 degrees sideways. This enables the M818 to be more versatile in tactical operations under difficult conditions. Those equipped with a winch can be used for recovery operations.

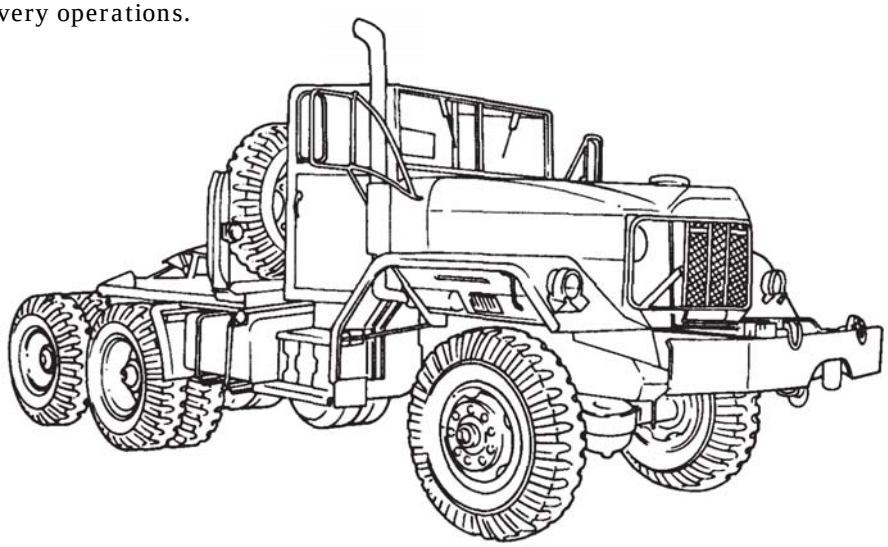

TRACTOR TRUCK (M818)

h. M819 Wrecker Tractor Truck, W/W.

PURPOSE: This model is used for wrecker, hauling, and salvage operations. It has a hydraulically-powered, engine-driven crane that is capable of extending 11.5-26 ft (3.5 1-7.93 m), rotating 270 degrees, and elevating 45 degrees. The M819 is also equipped with a fifth wheel for hauling semitrailers and a front winch to free the vehicle when it becomes mired.

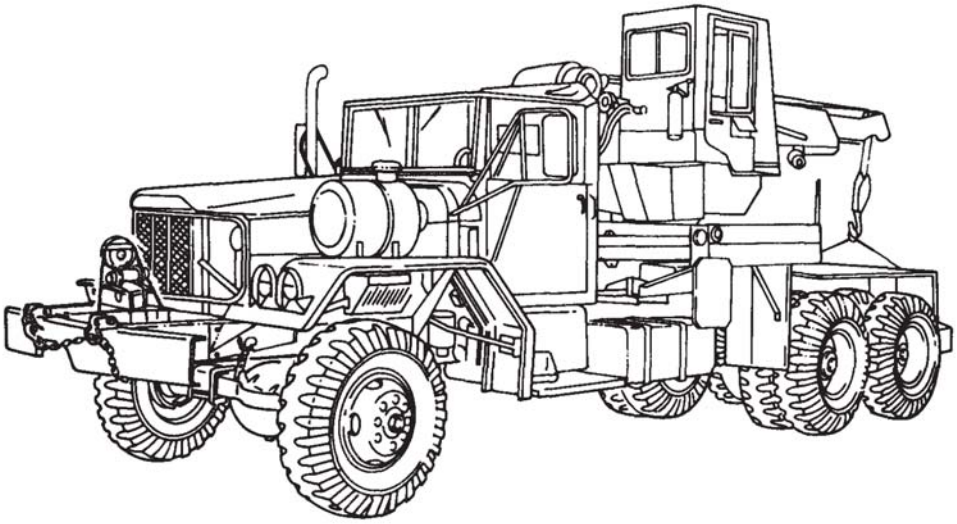

WRECKER TRACTOR TRUCK (M819)

1-10. EQUIPMENT CHARACTERISTICS, CAPABILITIES, AND FEATURES (Contd)

i. M820, M820A1, and M820A2 Expansible Van Truck, WO/W.

PURPOSE: These models are used for electrical, maintenance, supply, power, and base station operations. The M820A2 has a hydraulic liftgate [3,000 lb (1,362 kg) capacity], which makes it the preferred vehicle to use when heavy, delicate electronic equipment has to be moved in or out of the van.

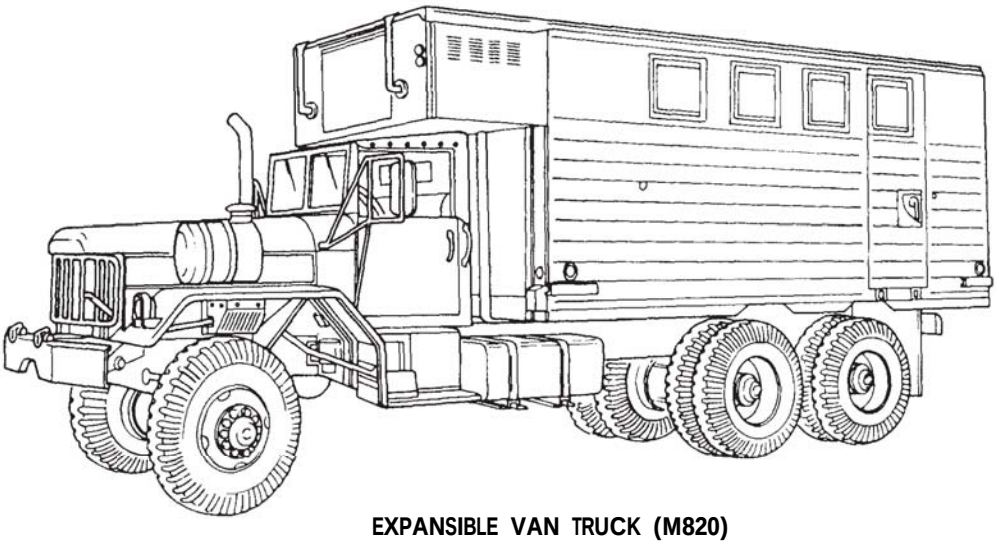

EXPANSIBLE VAN TRUCK (M820)

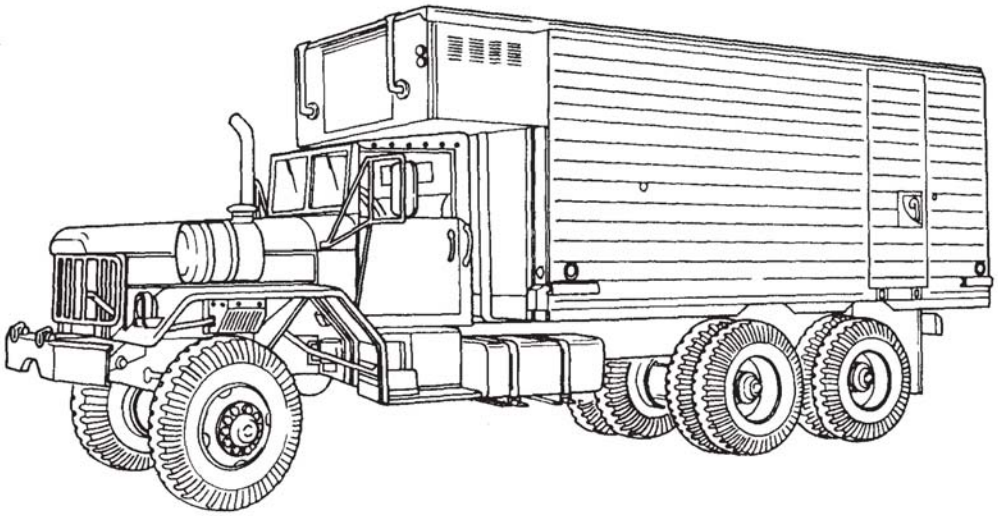

EXPANSIBLE VAN TRUCK (M820A1)

1-10. EQUIPMENT CHARACTERISTICS, CAPABILITIES, AND FEATURES (Contd)

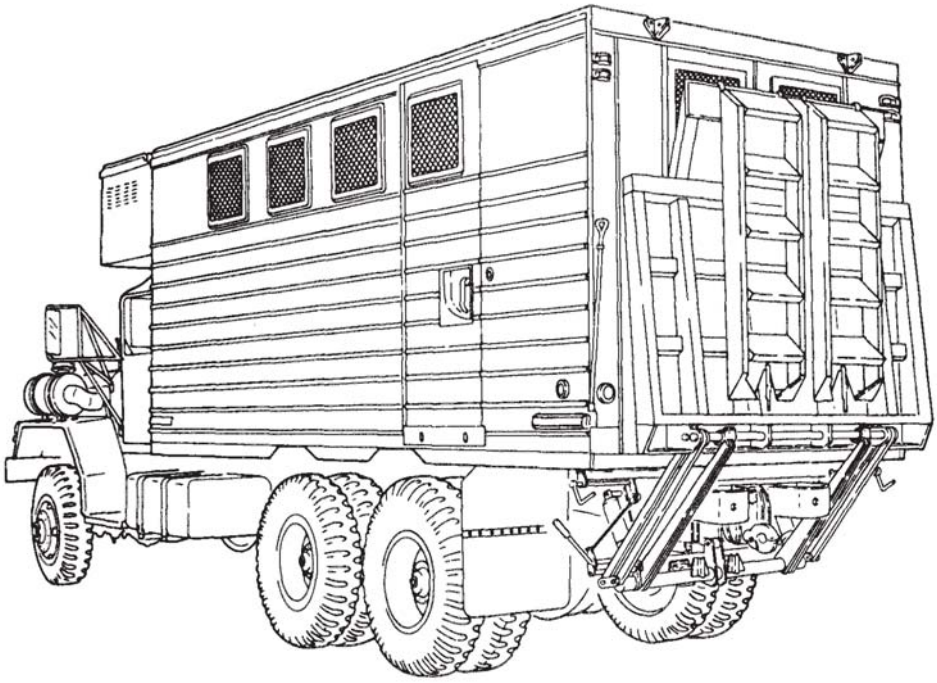

EXPANSIBLE VAN TRUCK, W/HLG (M820A2]

j. M821 Bridge Transporting Stake Truck, WO/W.

PURPOSE: This model is designed for transporting bridge building equipment and other cargo. It is equipped with a front snatch Mock and rear roller for easier loading and unloading. The two hand-operated winches on the left side of the body and two winches at the rear of the body are used to secure a load on the truck.

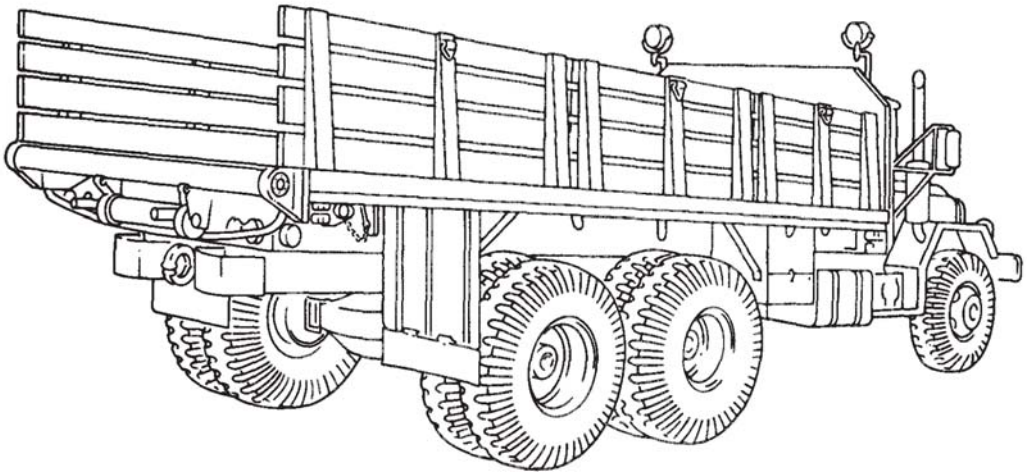

BRIDGE TRANSPORTING STAKE TRUCK (M821)

1-11. LOCATION AND DESCRIPTION OF MAJOR EXTERNAL COMPONENTS

The external components described below are common to most of the vehicles covered in this manual. Special differences can be found in TM 9-2320-260-10 or table 1-1, Differences Between Models, in this manual.

A ENGINE – Provides power for the vehicle.

B LIFTING/TIEDOWN SHACKLES – Used for lifting the vehicle during ship-to-shore operations and for tiedown attachments when transporting vehicle.

C FRONT WINCH – Powered by a propeller shaft extending from transmission power takeoff to permit recovery operations.

D TRANSMISSION – Manual transmission that transmits engine power to transfer case.

E REAR PROPELLER SHAFT(S) – Transmits engine power from transmission to transfer case and then to rear differentials.

F FUEL TANK(S) – Stores fuel.

G REAR BOGIE – Suspension system that supports rear vehicle weight.

H TOWING PINTLE HOOK – Permits towing of vehicles, trailers, and other equipment.

I REAR DIFFERENTIALS – Transmit power from propeller shafts through axles to wheels.

J TRANSFER CASE – The two-speed transfer case, along with five forward speed transmission, provides 10 speed ranges to front and rear differentials.

K AIR RESERVOIRS – Two storage tanks for compressed air.

L FRONT PROPELLER SHAFT – Transmits engine power from transfer case to front differential.

M FUEL FILTER AND WATER SEPARATOR – Filters contaminants from fuel.

N AIR CLEANER – Filters air before it enters the intake manifold.

1-11. LOCATION AND DESCRIPTION OF MAJOR EXTERNAL COMPONENTS (Contd)

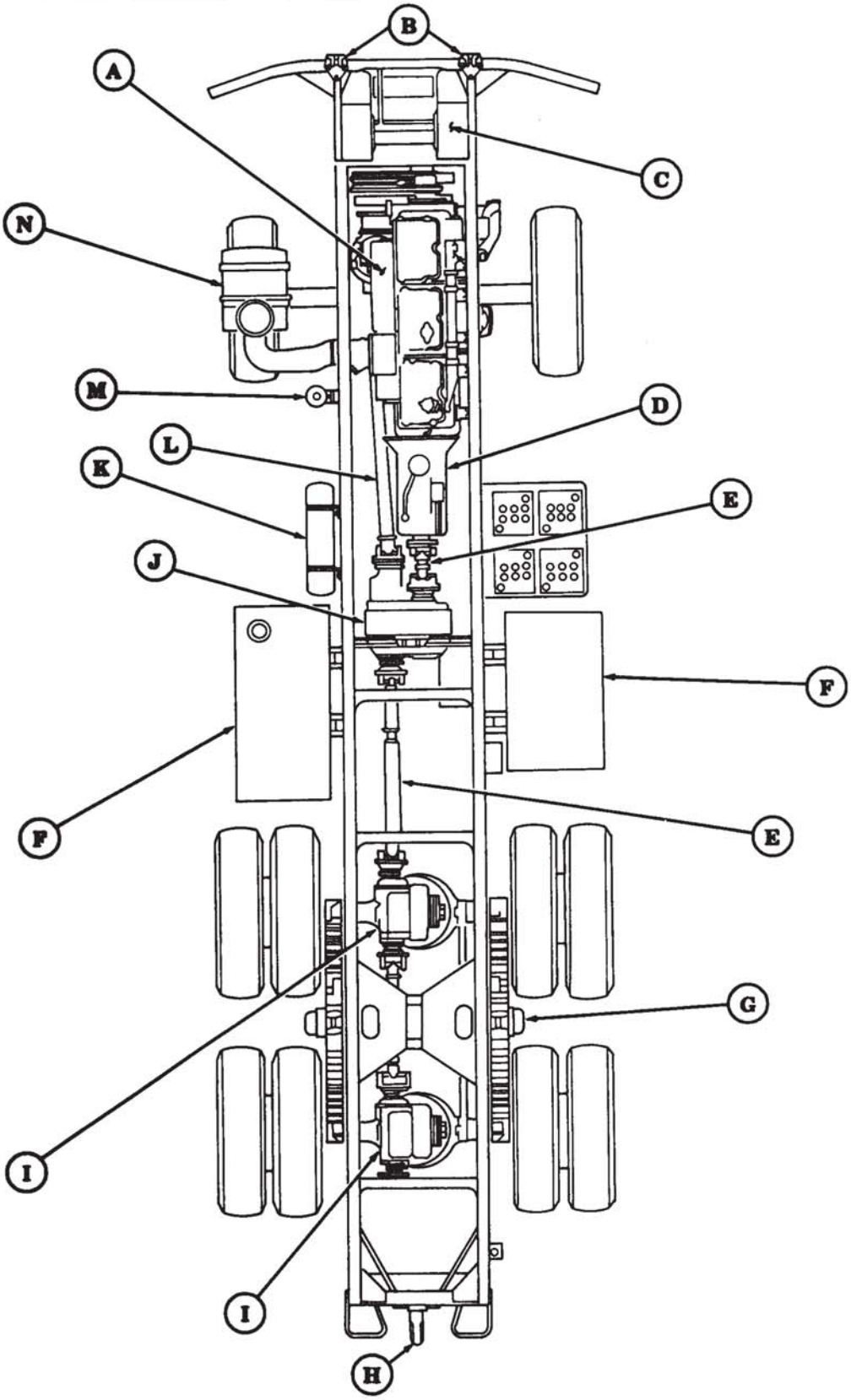

1-12. LOCATION AND DESCRIPTION OF MAJOR INTERNAL COMPONENTS

The internal components described below are common to most of the vehicles covered in this manual. Components not covered here are found in TM 9-2320-260-10 or the applicable maintenance chapters of this manual.

A STEERING WHEEL - Used to manually control vehicle.

B TRANSMISSION GEARSHIFT LEVER - Used to place transmission in 1 through 5 forward drive positions, reverse, or neutral.

C FRONT WINCH CONTROL LEVER - A two-position lever to engage or disengage drive to front winch.

D TRANSFER CASE SHIFT LEVER - Used on all vehicles to change ratio of driving power to axles and wheels. Lever is pulled up for HIGH range (greater speed and lower power) or pushed down for LOW range (lower speed and higher power).

E DRIVER'S SEAT - One crewmember, flotation, or fixed, adjustable.

F POWER DIVIDER CONTROL LEVER LOCK (M816) - Prevents power divider control lever from being placed in engaged position.

G POWER DIVIDER CONTROL LEVER (M816) - Used to power hydraulic crane, dump body hydraulics, and rear winch.

H PARKING BRAKE CONTROL LEVER - Pulled up to apply parking brake. The knob at the top of the handle is turned clockwise to increase brake cable tension.

I HEADLIGHT BEAM SELECTOR SWITCH - Depressed to select HIGH or LOW headlight beam.

J ACCELERATOR PEDAL - Used to control engine speed.

K CLUTCH PEDAL - Depressed to disengage engine from transmission and allows shifting to a different gear ratio.

L BRAKE PEDAL - Depressed to slow or stop vehicle.

M INSTRUMENT PANEL – Contains indicators, gages, and various switches used to monitor engine performance and activate accessory components of the vehicle.

1-12. LOCATION AND DESCRIPTION OF MAJOR INTERNAL COMPONENTS (Contd)

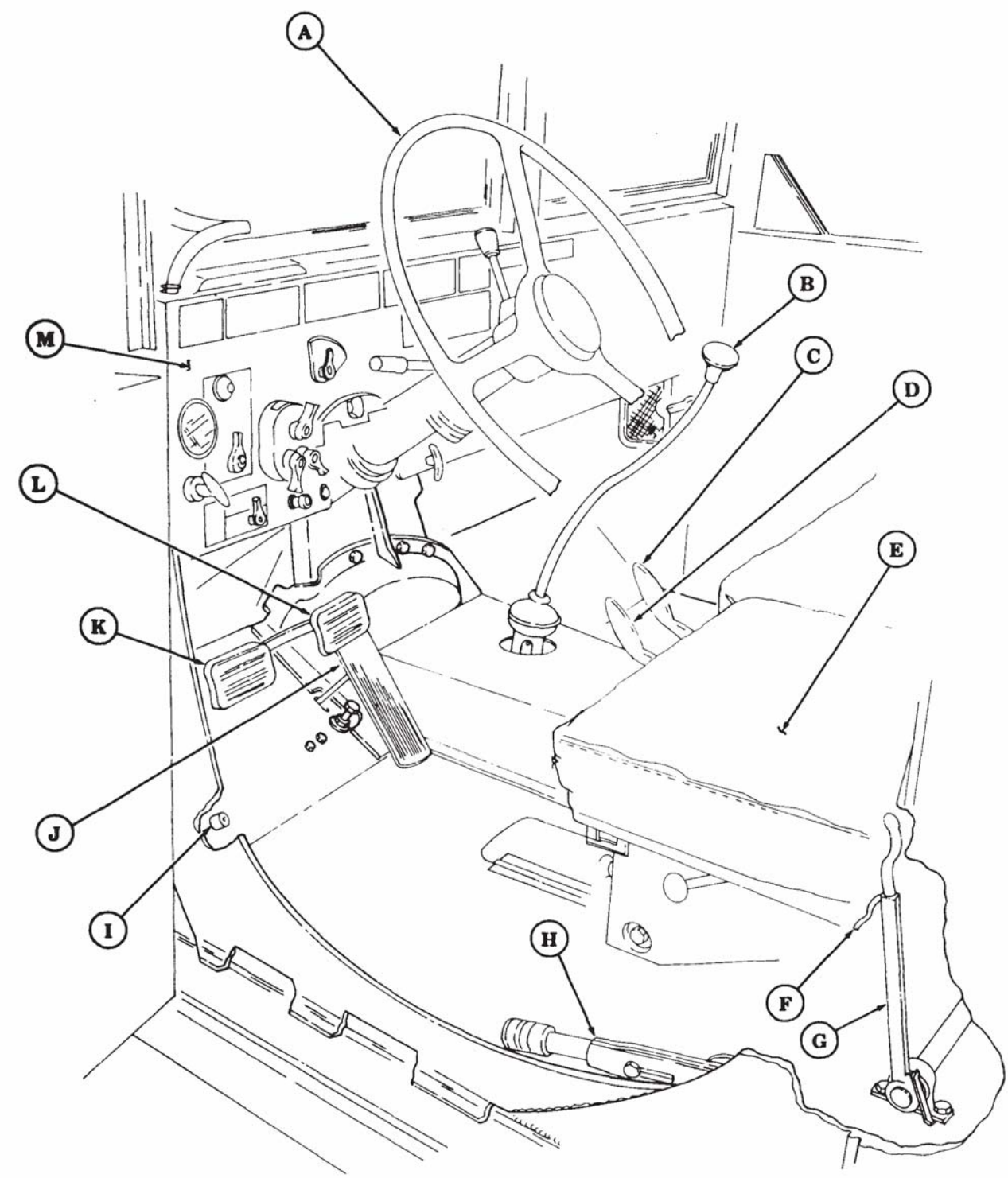

1-13. LOCATION AND CONTENTS OF WARNING, CAUTION, AND DATA PLATES

a. The location and contents of warning, caution, and data plates are provided in this paragraph. A complete list and location of all warning, caution, and data plates is in TM 9-2320-260-20P. If plates are worn, broken, painted over, missing, or unreadable, they must be replaced.

b. Below are plates located inside the cab. These plates are common to one or more models covered in this manual.

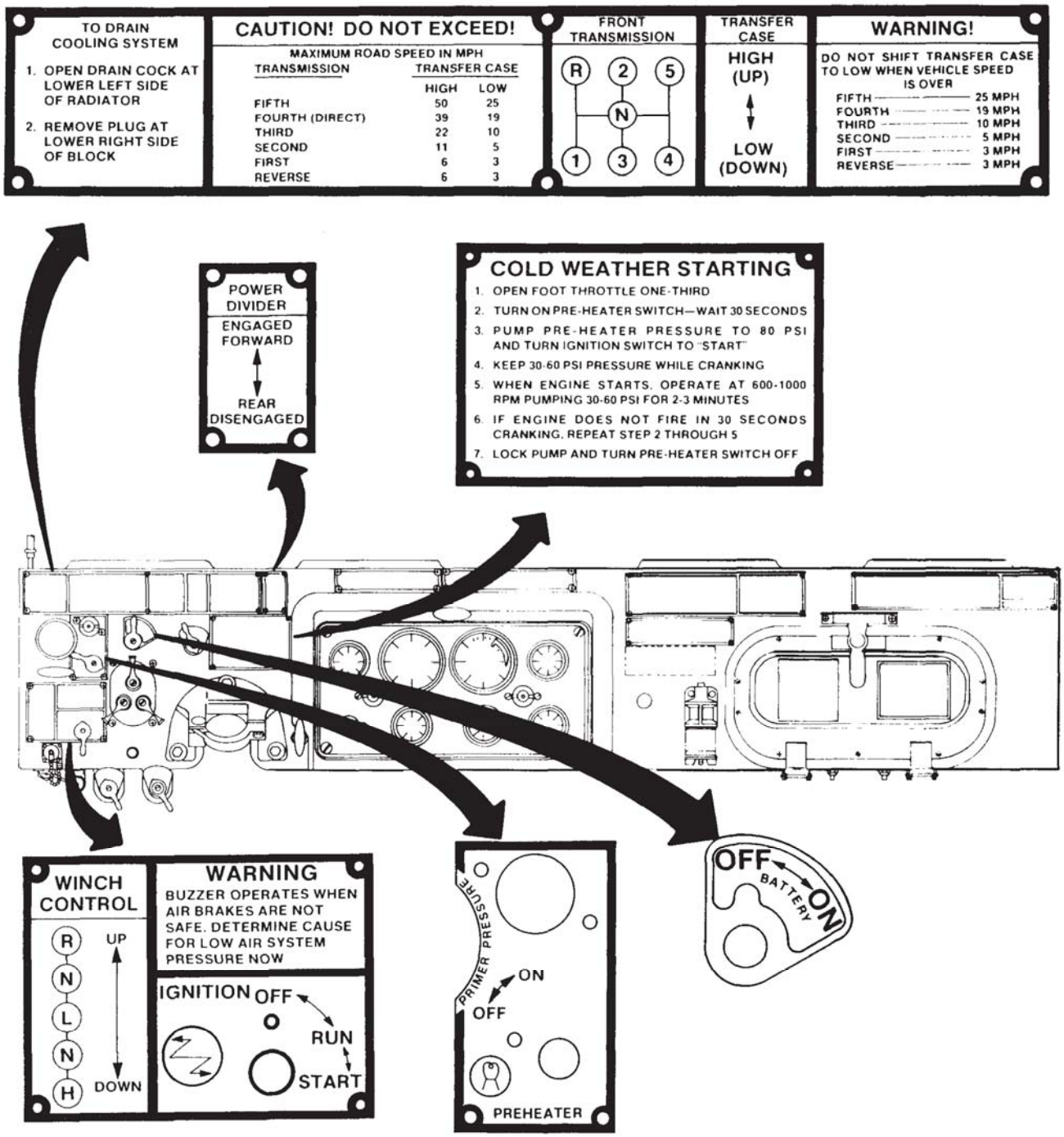

1-13. LOCATION AND CONTENTS OF WARNING, CAUTION, AND DATA PLATES (Contd)

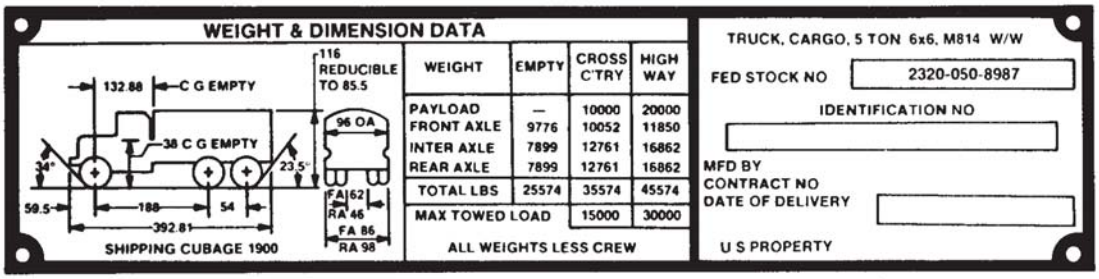

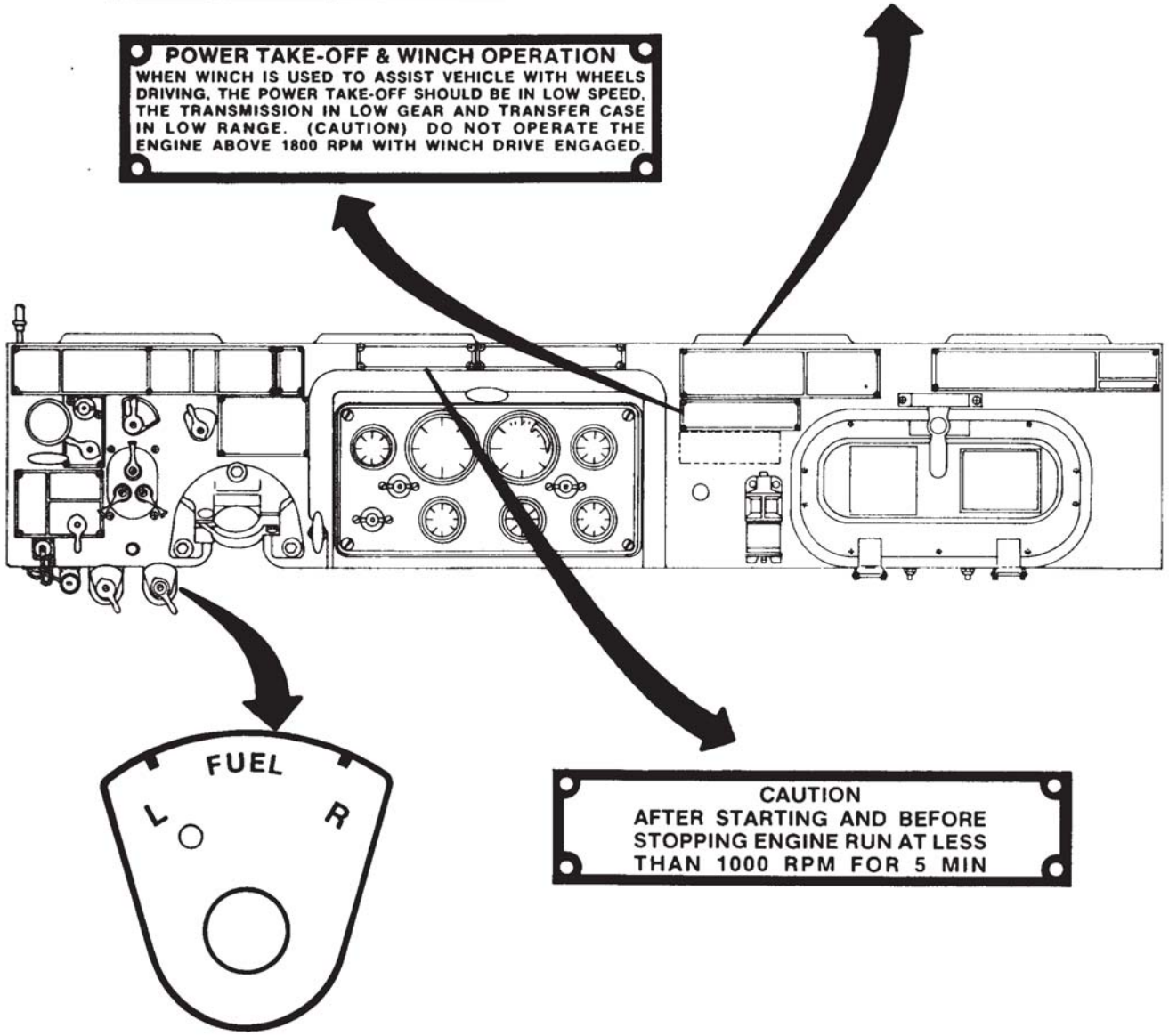

1-13. LOCATION AND CONTENTS OF WARNING, CAUTION, AND DATA PLATES (Contd)

SERVICING DATA			ELECTRICAL SYSTEM 24V		
DIESEL FUEL PER FEDERAL SPEC VV-F-800			TIRE INFLATION PRESSURE (PSI)		
FUEL TANK	CAPACITY	GAL	HIGHWAY	FRT	REAR
COOLING SYSTEM	CAPACITY	42 QTS	OFF HIGHWAY	FRT	REAR
TOTAL LUBE OIL	CAPACITY	28 QTS	MUD, SAND & SNOW	FRT "C"	REAR "D"

TEMPERATURE	ENGINE OIL	GEAR OIL	GREASE
ABOVE 32° F	OE/HDO-30 (SPEC MIL-L-2104)	GO 80/90 (SPEC MIL-L-2105)	GAA
+40° F TO -65° F	OEA (SPEC MIL-L-46167)	GO-75 (SPEC MIL-L-2105)	GAA

PUBLICATIONS APPLYING TO THIS VEHICLE	
OPER. MANUAL	TM 9-2320-260-10
LUB. ORDER	LO 9-2320-260-12
MAINT. MANUAL	TM 9-2320-260-20
PARTS MANUAL	TM 9-2320-260-20P

CHANGE OIL & FILTERS EVERY 6000 MILES OR 3 MONTHS

WARNING

WHEN OPERATING CRANE, TRANSMISSION MUST BE IN 4TH OR 5TH SPEED. BEFORE LIFTING LOADS OR OPERATING WINCHES, BE SURE TO SET MICRO-BRAKE LOCK BY MEANS OF PUSH BUTTON ON INSTRUMENT PANEL. MICROBRAKE LOCK NEVER TO BE USED FOR PROLONGED PARKING.

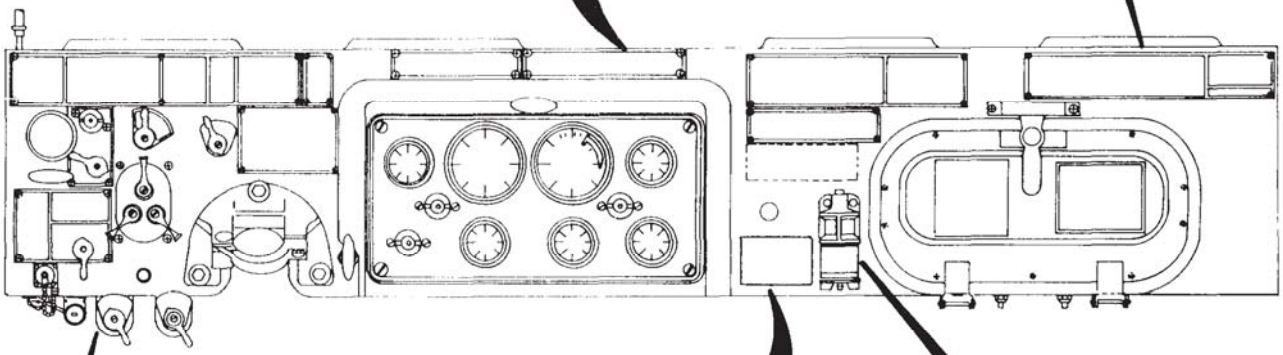

WARNING

IF NBC EXPOSURE IS SUSPECTED, ALL AIR FILTER MEDIA WILL BE HANDLED BY PERSONNEL WEARING FULL NBC PROTECTIVE EQUIPMENT. SEE OPERATOR/MAINTENANCE MANUALS.

7690-01-114-3702

AIR CLEANER RESTRICTION GAGE
ORD. NO. 11664550

1. AT 1600 ENGINE RPM RED INDICATOR MUST RISE AT LEAST TO GREEN LINE.
2. WHEN RED INDICATOR IS LATCHED TO TOP AT ANY SPEED FILTER SERVICE IS REQUIRED.
3. FOR COMPLETE INSTRUCTIONS SEE OPERATOR'S MANUAL.

1-13. LOCATION AND CONTENTS OF WARNING, CAUTION, AND DATA PLATES (Contd)

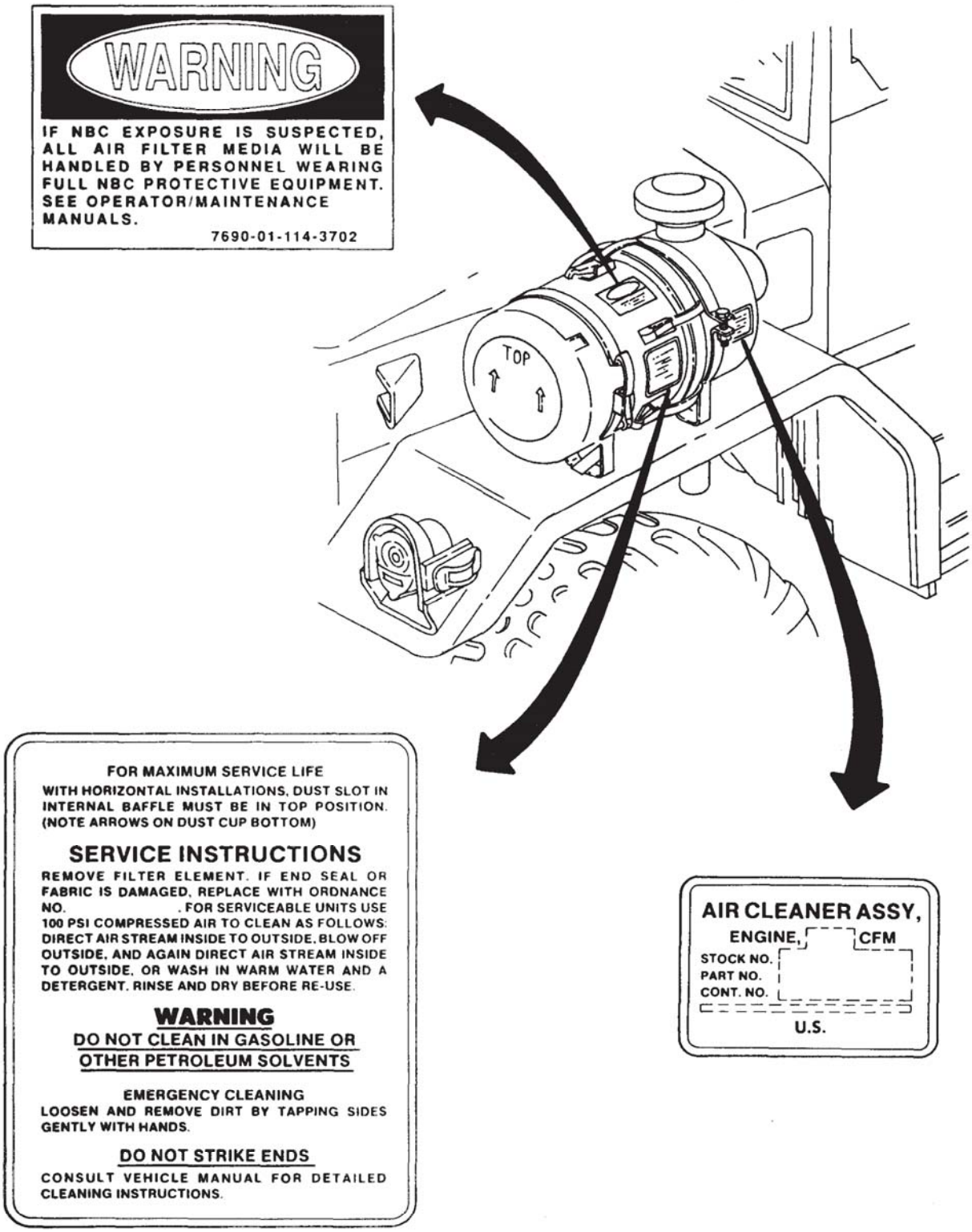

1-13. LOCATION AND CONTENTS OF WARNING, CAUTION, AND DATA PLATES (Contd)

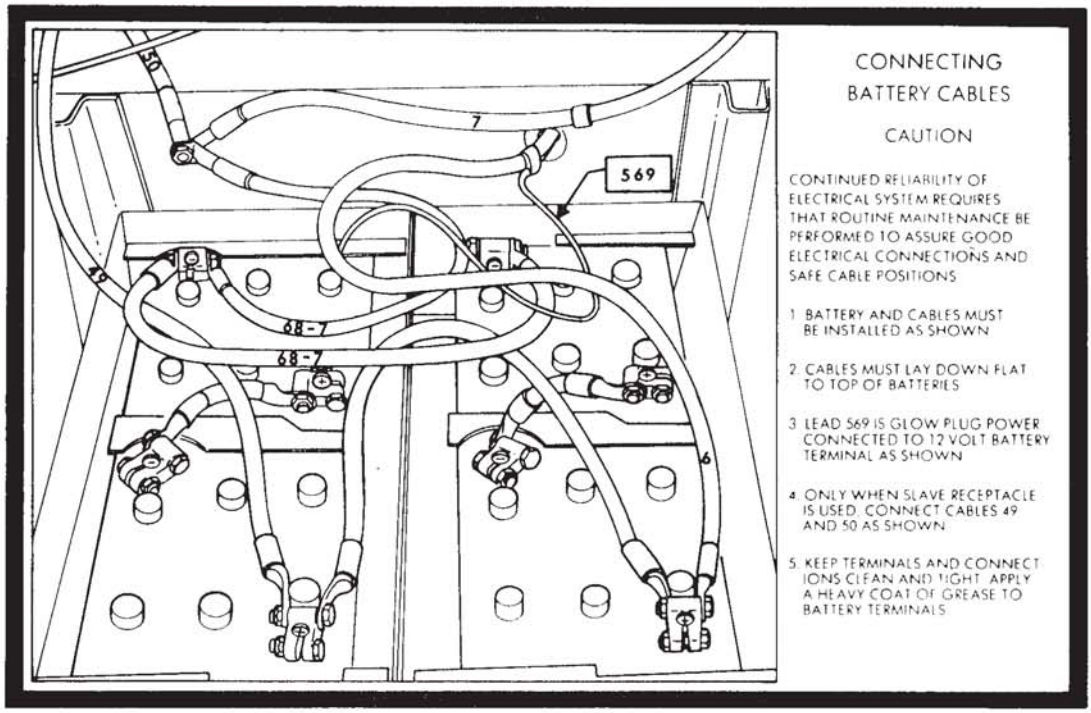

CONNECTING BATTERY CABLES

CAUTION

CONTINUED RELIABILITY OF ELECTRICAL SYSTEM REQUIRES THAT ROUTINE MAINTENANCE BE PERFORMED TO ASSURE GOOD ELECTRICAL CONNECTIONS AND SAFE CABLE POSITIONS

1. BATTERY AND CABLES MUST BE INSTALLED AS SHOWN
2. CABLES MUST LAY DOWN FLAT TO TOP OF BATTERIES
3. LEAD 569 IS GLOW PLUG POWER CONNECTED TO 12 VOLT BATTERY TERMINAL AS SHOWN
4. ONLY WHEN SLAVE RECEPTACLE IS USED, CONNECT CABLES 49 AND 50 AS SHOWN
5. KEEP TERMINALS AND CONNECTIONS CLEAN AND TIGHT. APPLY A HEAVY COAT OF GREASE TO BATTERY TERMINALS

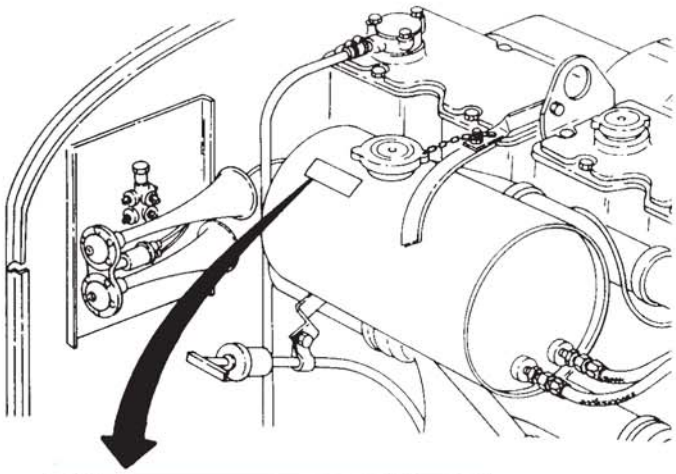

CAUTION

OPEN PETCOCKS ON TOP OF ENGINE AND TOP OF RADIATOR WHEN ADDING COOLANT. AFTER SYSTEM HAS BEEN COMPLETELY FILLED, CLOSE PETCOCKS.

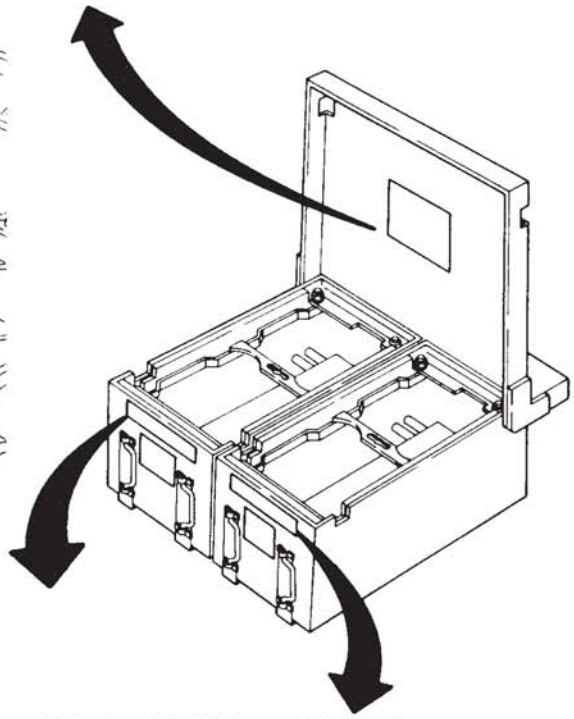

CAUTION

DISCONNECT BATTERY GROUND CABLE (NEGATIVE TERMINAL OF REAR BATTERY) FIRST AND THEN DISCONNECT CABLE FROM POSITIVE TERMINAL OF FORWARD BATTERY BEFORE PERFORMING ANY ELECTRICAL SYSTEM SERVICE. AFTER SERVICE RECONNECT BATTERY GROUND LEAD LAST.

1-13. LOCATION AND CONTENTS OF WARNING, CAUTION, AND DATA PLATES(Contd)

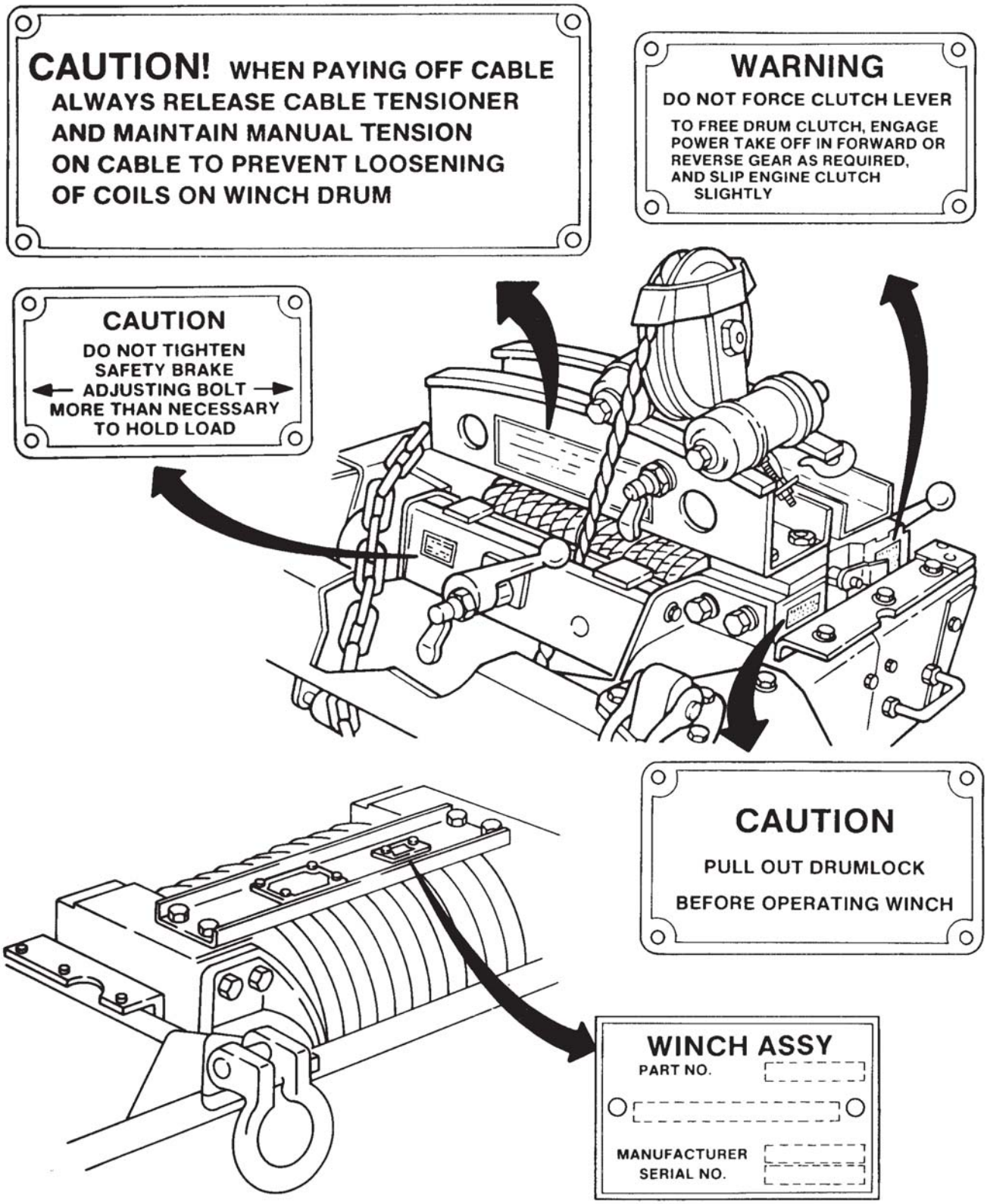

1-13. LOCATION AND CONTENTS OF WARNING, CAUTION, AND DATA PLATES (Contd)

c. The following data plates are common only to M816 medium wreckers.

SUB ZERO OPERATING INSTRUCTIONS

SELECT ONE CONTROL LEVER AND MOVE IT UNTIL TRUCK ENGINE BEGINS TO STALL OR HYDRAULIC OIL RELIEF VALVE OPENS. RETURN LEVER PAST NEUTRAL SO AS TO REVERSE ACTION TO ORIGINAL POSITION. REPEAT THIS ROCKING PROCEDURE, EACH TIME PROGRESSIVELY MOVING FARTHER THAN THE TIME BEFORE. CONTINUE UNTIL THIS OPERATION IS IN MAXIMUM POSITION AND OIL HAS WARMED SUFFICIENTLY TO FLOW FREELY IN THIS CIRCUIT. FOLLOW THIS PROCEDURE WITH EACH ADDITIONAL CONTROL UNTIL OIL HAS REACHED PROPER OPERATING TEMPERATURE WHICH WILL BE INDICATED BY CONTROLS AND FUNCTIONS OF CRANE WORKING FREELY.

OIL HYDRAULIC SYSTEM

USE OE10 MIL-0-2104-10° TO +90°

USE OE30 MIL-0-2104 ABOVE 90°

USE OES MIL-0-10295 0° TO -65°

CRANE CAPACITY

2 PART HOIST LINE		
RADIUS	WITH OUTRIGGERS	WITHOUT OUTRIGGERS
18 FT.	4000	3000
17 FT.	4250	3200
16 FT.	4550	3500
15 FT.	5000	3800
14 FT.	5600	4100
13 FT.	6300	4600
12 FT.	7150	5100
11 FT.	8400	5800
10 FT.	10000	6700

MAXIMUM CAPACITY WITH BOOM RETRACTED & BOOM SUPPORTED TO FRAME-20,000# @ 10 FT. RADIUS WITH ALL OUTRIGGERS DOWN 3-PART LINE.
20,000# @ 15 FT. RADIUS WITH BOOM JACKS TO GROUND, 3-PART LINE - REAR OUTRIGGERS UP.

CAUTION

WHEN USING BOOM JACKS, PROVIDE A SOLID FOOTING, TIMBERS OR BLOCKS IF NECESSARY. RELIEVE LOAD OFF BOOM RAM WITH BOOM LEVER UNTIL PRESSURE IS EXERTED ON BOOM JACKS.

OPERATION DATA

TO ENGAGE CRANE DRIVE: ENGAGE POWER DIVIDER WITH LEVER IN TRUCK CAB THEN, USING CONTROLS AT REAR OF VEHICLE, DISENGAGE CLUTCH AND ENGAGE CRANE DRIVE. RE-ENGAGE CLUTCH. ALL THROTTLE ADJUSTMENTS MAY NOW BE CONTROLLED FROM OPERATORS STATION BY MEANS OF TOGGLE SWITCH.

CABLE HOIST LINE MUST BE LOWERED AS BOOM IS EXTENDED TO PREVENT FOULING OF SHEAVE AND HOOK AT END OF BOOM.

LUBRICATE ALL POINTS ON CRANE AS INDICATED ON LUBRICATION GUIDE.

SHIMS ARE PROVIDED IN THE FORWARD ROLLER AND UPPER ROLLER FOR TAKING LATERAL LOOSENESS OUT OF BOOM. AN ECCENTRIC MOUNTING OF REAR LOWER ROLLER TAKES VERTICAL LOOSENESS OUT OF BOOM.

WARNING

WHEN EXTENDING BOOM

MOVE HOIST AND CROWD LEVERS TOGETHER

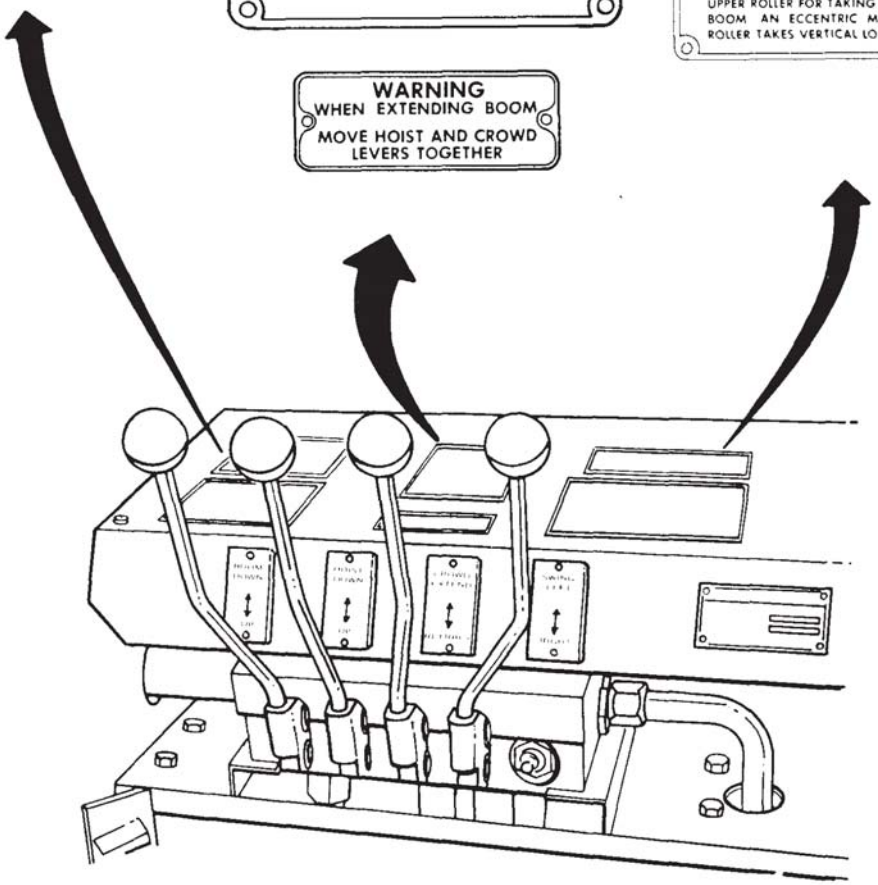

1-13. LOCATION AND CONTENTS OF WARNING, CAUTION, AND DATA PLATES (Contd)

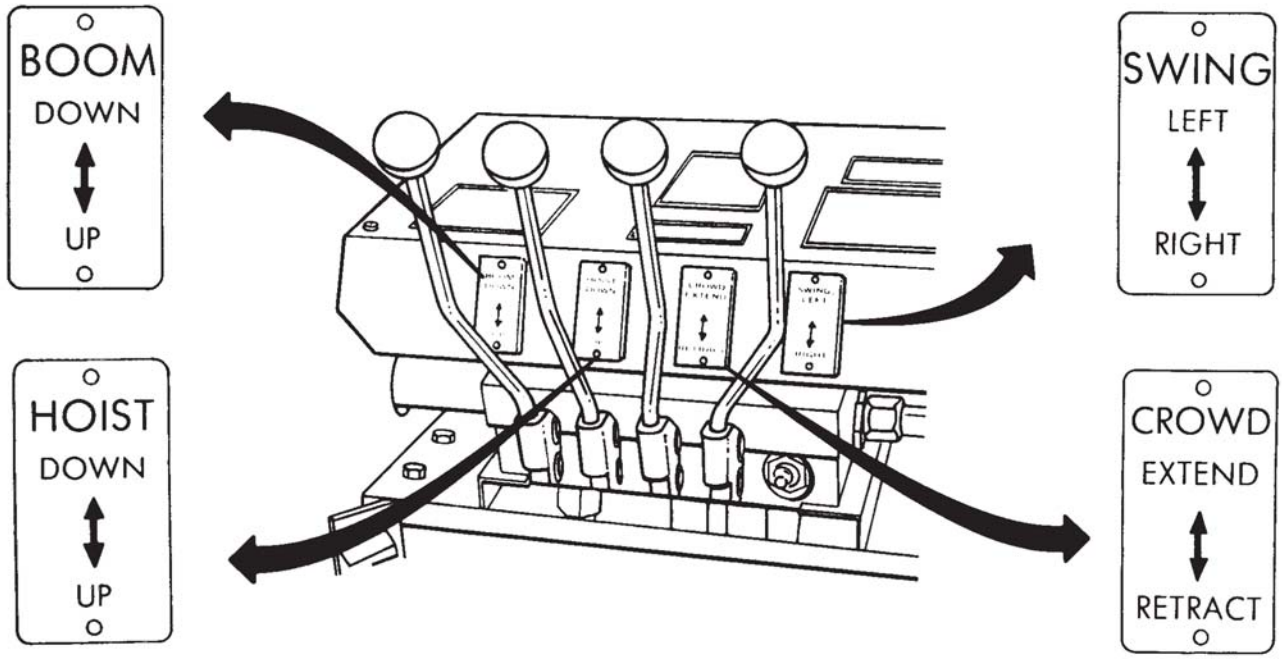

d. The following data plates are common only to M819 wrecker tractors.

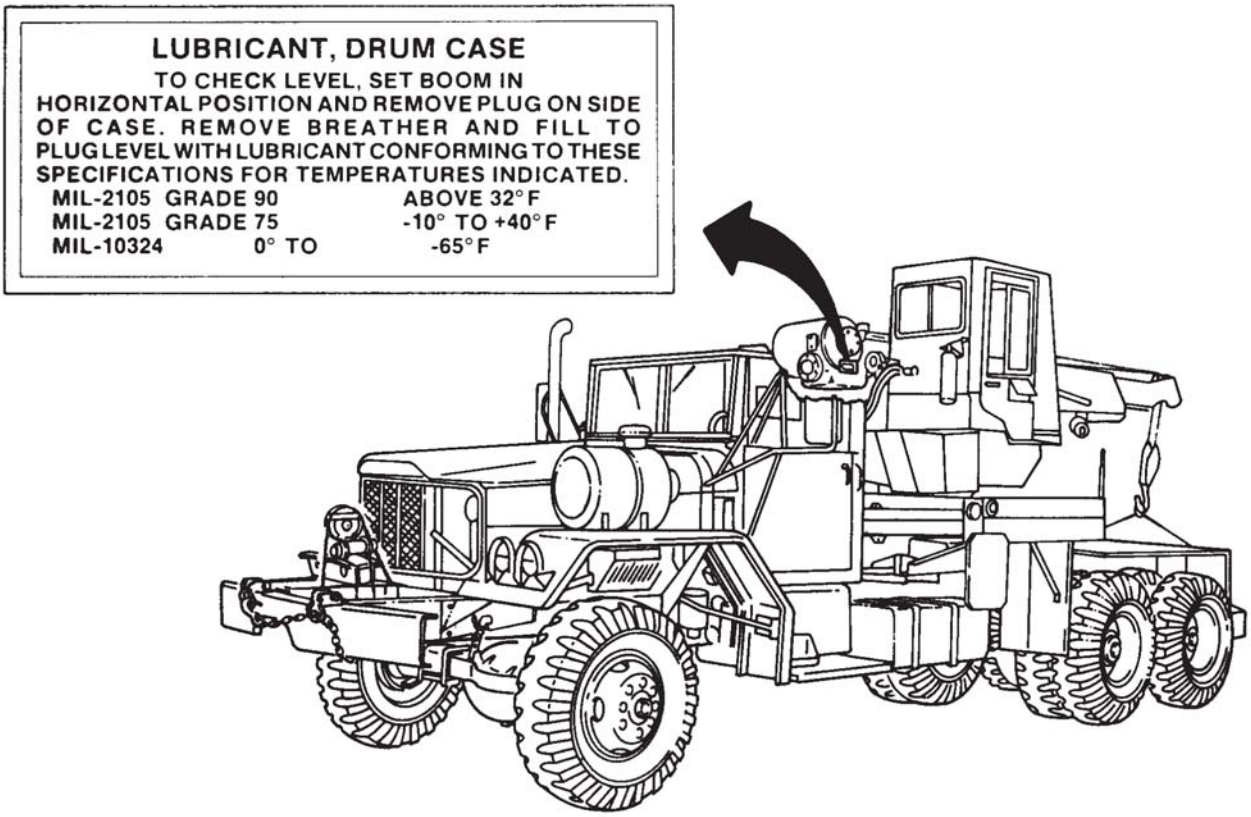

1-13. LOCATION AND CONTENTS OF WARNING, CAUTION, AND DATA PLATES (Contd)

OPERATION DATA

TO OPERATE HYDRAULIC PUMP: TRUCK TRANSMISSION MUST BE IN 4TH* GEAR. ENGAGE POWER TAKE-OFF IN TRUCK CAB.
ADVANCE THROTTLE CONTROL TILL 1600 RPM ± 50 IS REACHED AT NO LOAD. LEAVE THROTTLE CONTROL IN THIS POSITION AS ENGINE HAS GOVERNOR CONTROL AND NO FURTHER SETTING IS REQUIRED.

*ALSO 4TH GEAR ON MACK (M246A2), BUT 5TH GEAR ON GAS (M246) AND MULTIFUEL (M246A2).

SWING AND BOOM HOIST VALVES HAVE TAPERED CUT-OFF AND OPERATIONS CAN BE THROTTLED DOWN.

CABLE HOIST LINE MUST BE LOWERED AS BOOM IS EXTENDED TO PREVENT FOULING OF SHEAVE AND HOOK AT END OF BOOM.

RELIEF VALVE SETTING - 3200#.

LUBRICATE ALL POINTS ON CRANE, AS INDICATED ON LUBRICATION GUIDE.

SHIMS ARE PROVIDED IN THE FORWARD ROLLER AND UPPER ROLLER FOR TAKING LATERAL LOOSENESS OUT OF BOOM. AN ECCENTRIC MOUNTING OF REAR LOWER ROLLER TAKES VERTICAL LOOSENESS OUT OF BOOM.

SAFE LOAD CHART

RADIUS	WITH OUTRIGGERS LOAD IN LBS.	WITHOUT OUTRIGGERS LOAD IN LBS
11 FT. 6 IN.	10000	5200
12 FT.	9600	4750
13 FT.	8800	4275
14 FT.	8200	3800
15 FT.	7650	3500
16 FT.	7200	3175
17 FT.	6750	2950
18 FT.	6400	2700
19 FT.	6000	2500
20 FT.	5750	2300
21 FT.	5450	2200
22 FT.	5200	2100
23 FT.	5000	2000
24 FT.	4800	1950
25 FT.	4650	1825
26 FT.	4500	1700

MAXIMUM CAPACITY 20,000# AT 15 FT. RADIUS WITH BOOM JACKS TO GROUND REAR OUTRIGGERS UP & 3 PART LINE.

—WARNING—

PIN FOR BOOM JACKS TO BE INSERTED THRU BOOM AND EXTENSION - NOT THRU EXTENSION ONLY.

WHEN USING BOOM JACKS, PROVIDE SOLID FOOTING FOR BASES, THEN RELIEVE LOAD OFF BOOM RAM WITH BOOM LEVER

MAXIMUM CAPACITY WITH BOOM RETRACTED TO 11'6" RADIUS, WITH 2-PART LINE AND BOOM SUPPORTED TO FRAME - 10000#

MAXIMUM CAPACITY WITH BOOM RETRACTED TO 11'6" RADIUS, WITH 2-PART LINE AND ALL OUTRIGGERS DOWN - 10000#

WARNING

BEFORE ALL DEEP WATER FORDING OPERATIONS, REMOVE BREATHER CAPS FROM HYDRAULIC TANK AND SWING DRIVE AND REPLACE WITH PIPE PLUGS. TIGHTEN PLUGS SUFFICIENTLY TO MAKE WATERTIGHT.

REMOVE PIPE PLUGS AND REPLACE BREATHER CAPS AFTER FORDING OPERATION IS COMPLETED.

WARNING

AFTER ALL DEEP WATER FORDING OPERATIONS, REMOVE PIPE PLUGS FROM BOTTOM OF BASE PLATE. PIVOT POST AND RING GEAR HOUSING SHOULD BE DRAINED THOROUGHLY BEFORE REPLACING PLUG.

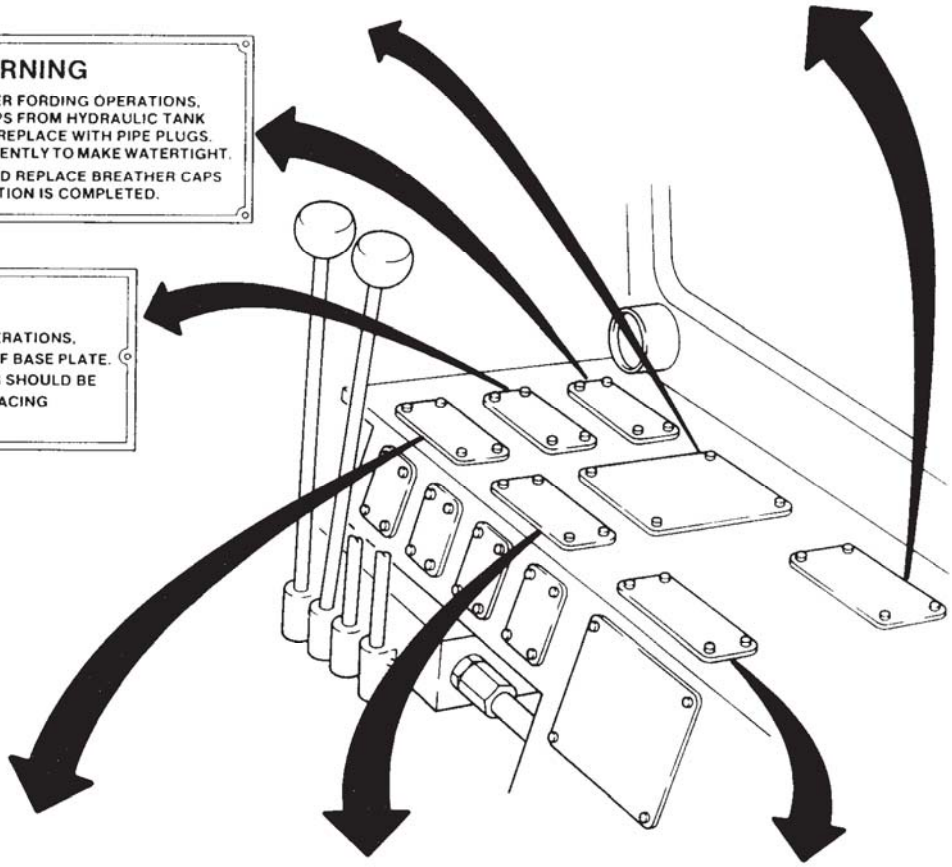

OIL HYDRAULIC SYSTEM
USE OE10 MIL-0-2104-10° TO +90°

USE OE30 MIL-0-2104 ABOVE 90°

USE OES MIL-0-10295 0° TO -65°

CAUTION

MOVE CROWD AND HOIST LEVERS TOGETHER

WARNING

REMOVE LOCK PIN FROM PIVOT POST. STOP BEFORE OPERATING CRANE. REPLACE PIN FOR TRANSIT.

1-13. LOCATION AND CONTENTS OF WARNING, CAUTION, AND DATA PLATES (Contd)

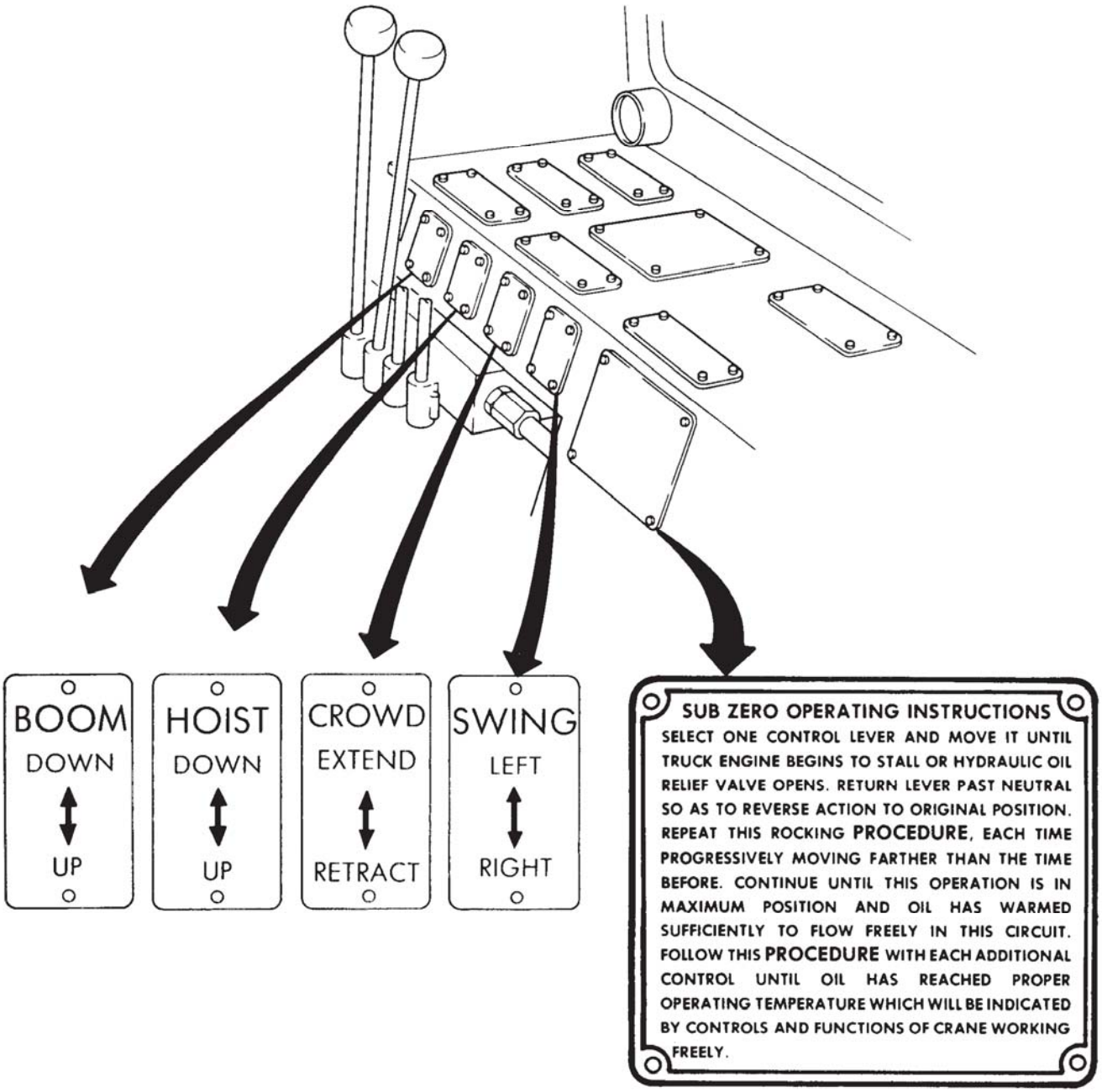

1-13. LOCATION AND CONTENTS OF WARNING, CAUTION, AND DATA PLATES (Contd)

e. The following data plates are common only to M813, M813A1, and M814 cargo trucks.

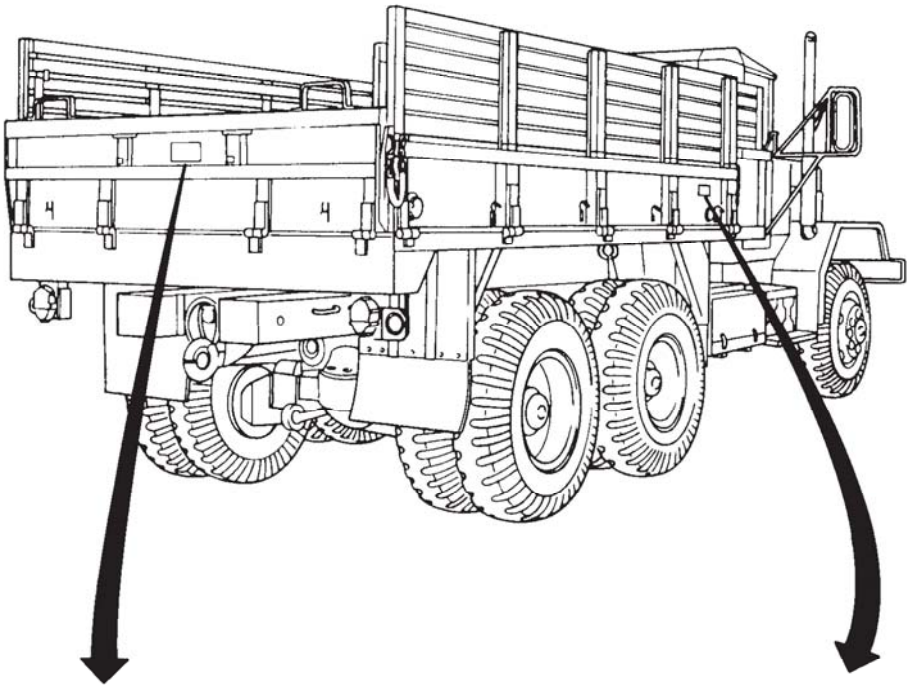

CAUTION

SECURE SIDE PANEL FRONT LOCKS PRIOR TO UNLATCHING TAILGATE.

SECURE SIDE RACK BRACES TO FLOOR WHEN TRANSPORTING TROOPS

CAUTION

TROOP SEATS, SIDE RACK BRACES, BOWS & SIDE RACKS MUST BE IN STOWED POSITION & SECURED BEFORE LOWERING SIDES.

M813A1

1-13. LOCATION AND CONTENTS OF WARNING, CAUTION, AND DATA PLATES (Contd)

f. The following data plates are common only to M820, M820A1, and M820A2 expansible vans.

NOTICE

DO NOT ATTEMPT TO EXPAND VAN UNTIL THESE INSTRUCTIONS ARE READ AND FOLLOWED TO THE LETTER TO PREVENT POSSIBLE PERMANENT BODY DAMAGE

1. BEFORE EXPANDING SIDE SECTIONS, MAKE SURE VAN IS APPROXIMATELY LEVEL. SEE INSTRUCTIONS BELOW FOR LEVELING.

   NOTE: LEVELING JACKS SHALL BE USED REGARDLESS OF GROUND CONDITION TO IMPROVE STABILITY OF EXPANDED VAN.

2. RELEASE FOUR (4) SIDEWALL CORNER LOCKS. LOCATED ONE (1) EACH LOWER CORNER.
3. USING SQUARE SOCKET WRENCH HANDLE PROVIDED, RELEASE FOUR (4) SIDE LOCKS ONE QUARTER (1/4) TURN COUNTER CLOCKWISE. LOCATED TWO (2) EACH SIDE IN MIDDLE OF SIDE PANELS MARKED "A".
4. USING RATCHET CRANK WITH HEXAGON SOCKET PROVIDED, RELEASE RATCHETS MARKED "B" LOCATED BELOW DOORS ON REAR. CRANK BOTH SIDES FULL OUT.
5. OPEN FOUR (4) SIDE END DOORS USING HOOK HOLDERS AT BOTTOM MARKED "C" TO HOLD ALL DOORS OPEN 120 .
6. RELEASE LOCKS ON OUTSIDE OF UPPER CEILING PANELS MARKEO "D" AND PULL PARTIALLY OUTWARD. STANDING CLEAR ON GROUND PULL ON GRAB HANDLE ATTACHED TO LOWER FLOOR PANELS AND RAISE COUNTER BALANCED CEILING PANELS.
7. LIFT HINGED ROOF AND TURN SIX (6) SWIVEL HOOKS 90° FROM SIDE MARKED "E". PULL SWIVEL HOOKS IN UNTIL HINGED ROOF CAN REST ON THEM.
8. RELEASE FOUR (4) HOOKS MARKED "C" (BE SURE TO REPLACE IN CLIP HOLDERS) FROM END PANEL DOORS AND PULL DOORS IN UNTIL THEY MAKE CONTACT WITH HINGEO FLOOR AND ROOF SEALS. NOTE: IT IS NECESSARY YO LIFT HINGED ROOF TO GET A SNUG FIT WITH SEALS.
9. WITH END PANEL DOORS IN PLACE USE LARGE END OF SQUARE SOCKET WRENCH TO PUSH SLIDING BOLT INSIDE CORNER POST GUIDE MARKED "F" (NOTE: FULLY EXTEND SLIDING BOLT).
10. SWITCH RATCHET LOCKING MECHANISM MARKED "B" INTO ITS CLOSED POSITION AND PUT RATCHET CRANK ("B") ARM INTO A HORIZONTAL POSITION.
11. BRING SIDE SECTION IN JUST ENOUGH TO ENGAGE EYE BOLTS ON TOGGLE CLAMPS MARKED "C". PULL SIDE PANEL STRAIGHT BY PARTIALLY CLOSING ("G"). WHILE DOING THIS LIFT HINGED ROOF AT END PANEL DOORS SLIGHTLY TO ENSURE SEAL ALIGNMENT. THE SIDE IS NOW READY TO BE COMPLETELY CLOSED.
12. FOR FINAL LOCKING OF SIDE, STEP INSIDE VAN AND JUMP LIGHTLY UP AND DOWN ON HINGED FLOOR TO FREE SAME FROM POSSIBLE BINDING OF ALIGNMENT PINS. NOW APPLY FULL WEIGHT ON CRANK TO ENSURE A FINAL AND TIGHT SEAL. MAKE SURE THAT SEALS ON HINGED ROOF AND NEOPRENE RUBBER BLOCKS ARE LIBERALLY GREASED TO PREVENT BINDING. THIS IS ESPECIALLY IMPORTANT WHERE END PANEL DOOR MOVES INTO THE HINGED ROOF CORNER SEAL AT CORNER POST.
13. ENGAGE SIX (6) DRAW CLAMP LOCKS MARKED "G" IN GUIDE HOOKS MARKED "E" ON RAISED CEILING PANELS TO DRAW SIDES, END DOORS AND CEILING PANELS TIGHT AGAINST SEALS (CLOSE CENTER CLAMP FIRST).
14. EXTEND SLIDING BOLTS TO FULLY EXTENDED POSITION IN CORNER POST GUIDE.
15. ENGAGE FOUR (4) SIDEWALL CORNER LOCKS IN EXTENSION RODS LOCATED ON FOUR (4) CORNER POSTS

TO RETRACT VAN REVERSE PROCEDURE ABOVE. BE CERTAIN TO USE EXTREME PRESSURE ON RATCHET "B" TO LOCK SIDES TIGHT AGAINST BOTTOM SEALS BEFORE CLOSING FOUR (4) SIDE LOCKS "A".

INSTRUCTIONS FOR LEVELING VAN

1. SELECT LOCATION IF POSSIBLE TO PROVIOE NEAREST LEVEL OF VEHICLE. IF NECESSARY USE DUNNAGE UNDER APPROPRIATE WHEEL TO OBTAIN NEAR LEVEL FLOOR LINE.
2. REMOVE TWO (2) ADJUSTING JACKS AND BASE PLATES FROM COMPARTMENT UNDER REAR OF BODY AND PLACE ONE IN EACH OF TWO (2) SOCKETS MARKED "H" LOCATED AT THE TWO (2) REAR CORNERS.
3. USING CHAINED PINS ADJUST LENGTH OF JACKS AS REQUIRED.
4. RATCHET JACK SCREW TO RAISE OR LOWER EACH CORNER OF VAN.
5. DO NOT ATTEMPT TO JACK VAN CLEAR OF GROUND WITH LEVELING JACKS.

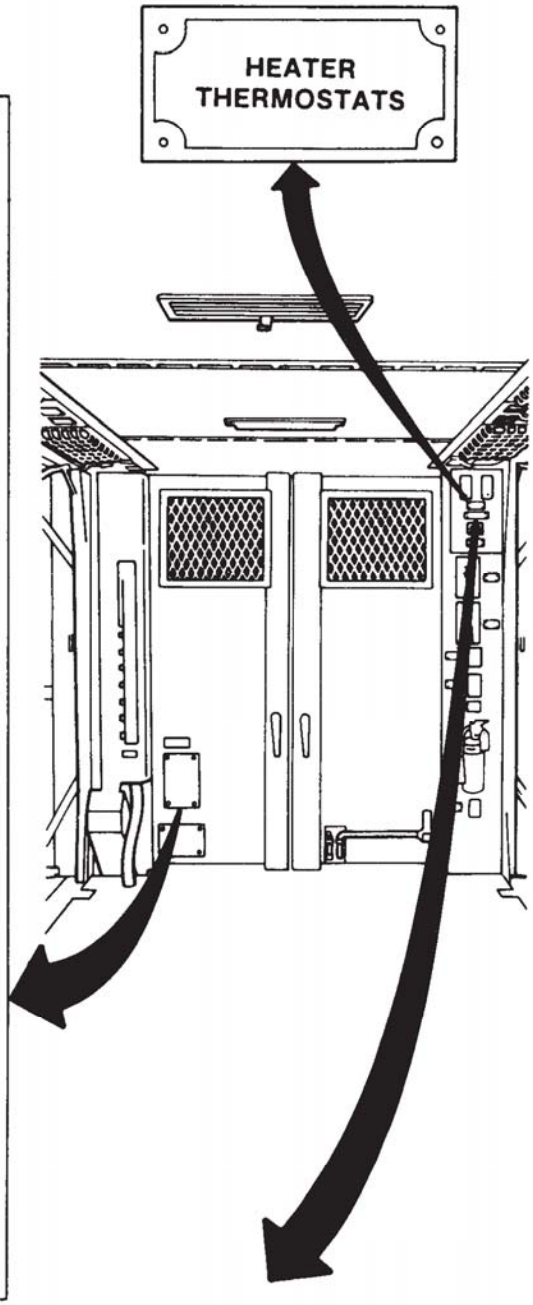

NOTICE: THESE THERMOSTATS MUST BE SET ABOVE ROOM TEMPERATURE BEFORE HEATERS CAN BE STARTED.

1-13. LOCATION AND CONTENTS OF WARNING, CAUTION, AND DATA PLATES (Contd)

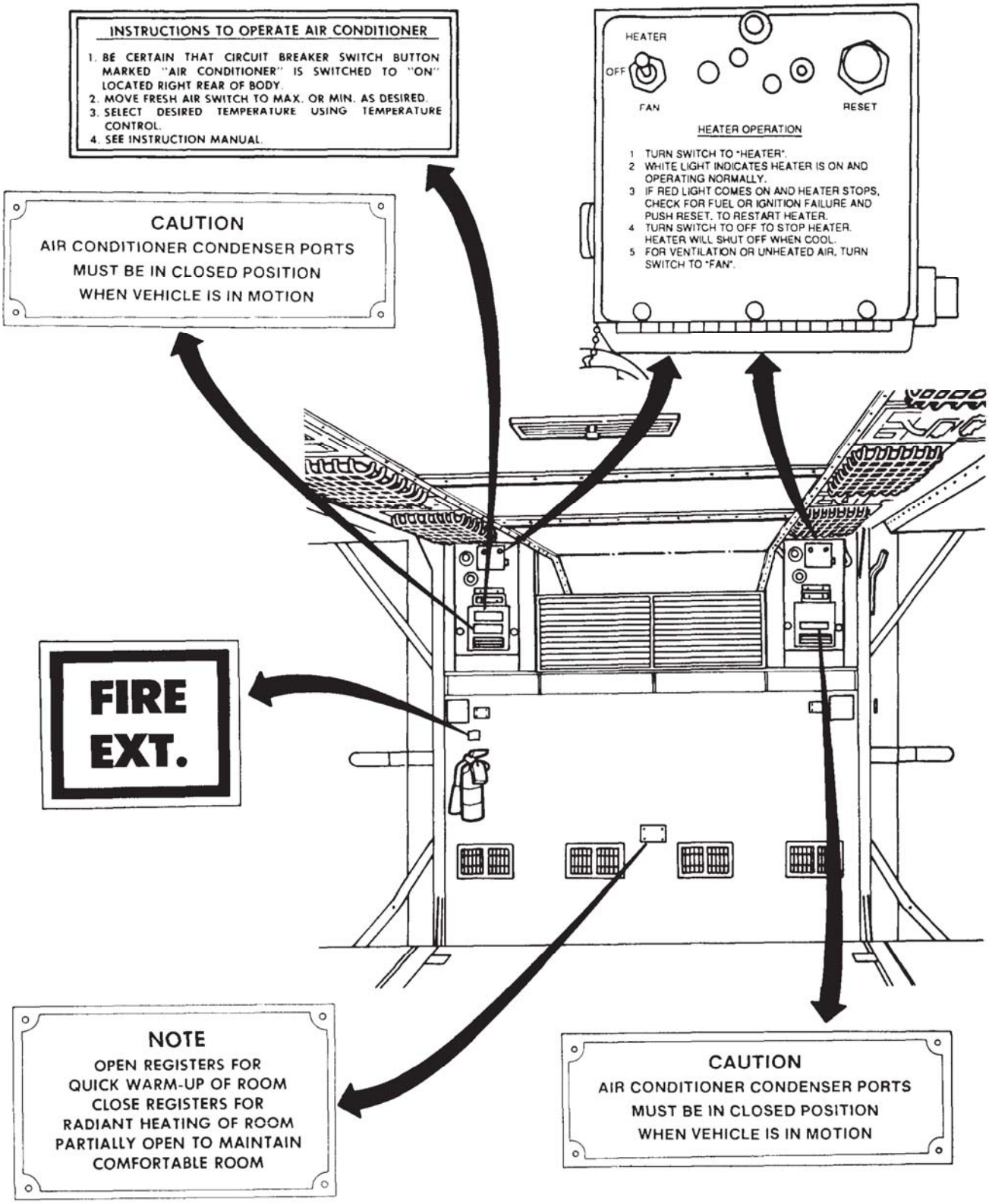

1-13. LOCATION AND CONTENTS OF WARNING, CAUTION, AND DATA PLATES (Contd)

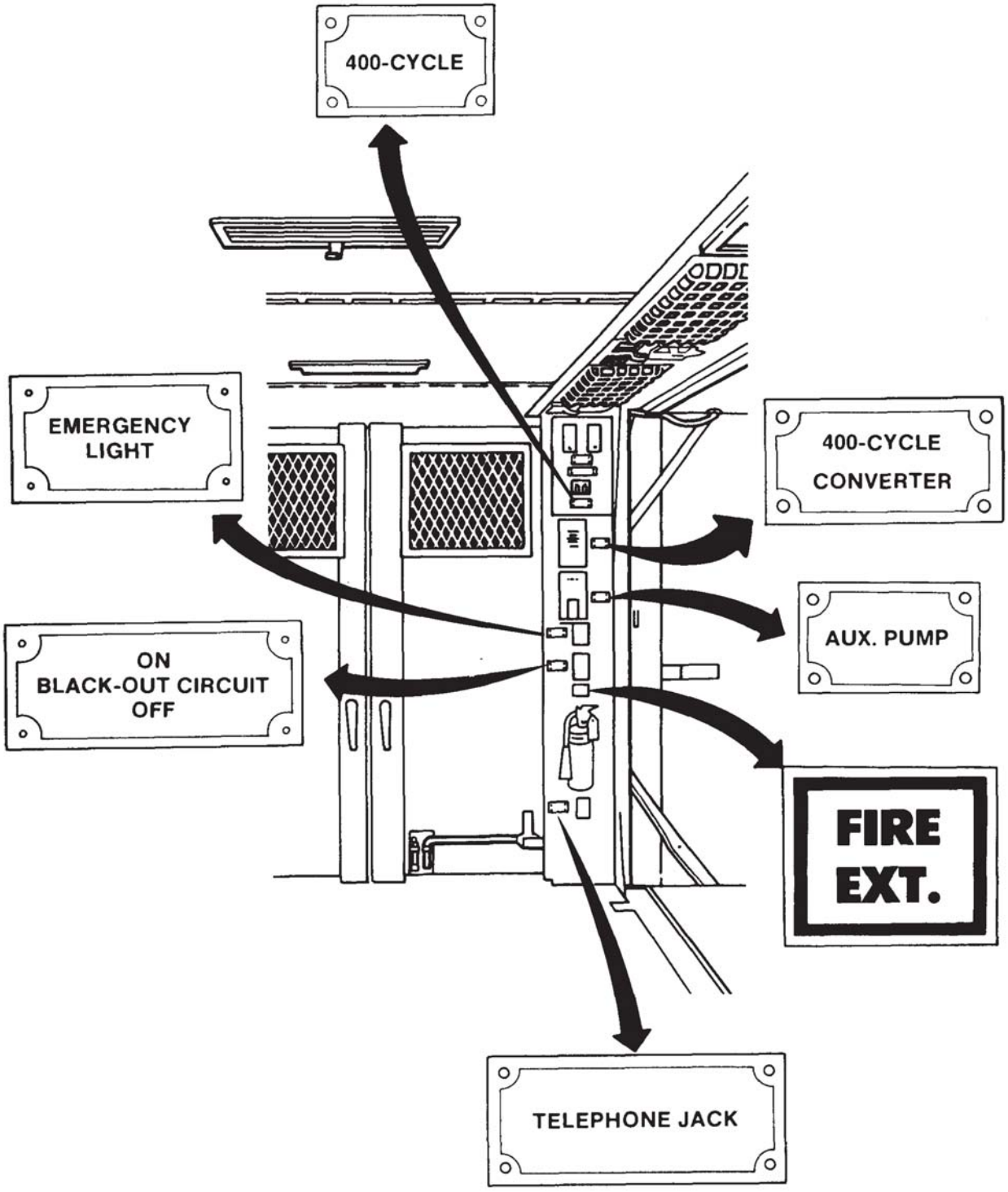

1-13. LOCATION AND CONTENTS OF WARNING, CAUTION, AND DATA PLATES (Contd)

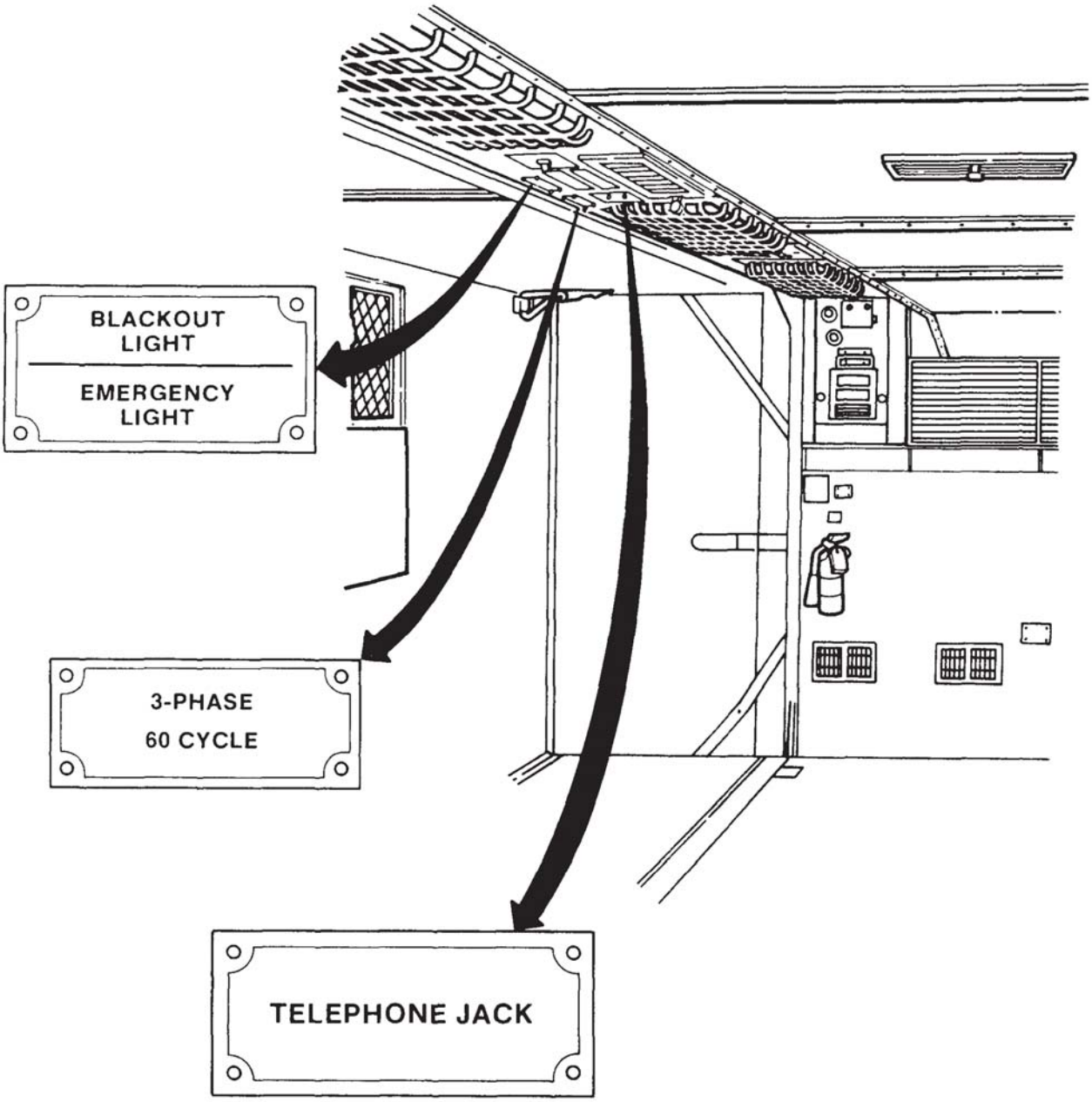

1-13. LOCATION AND CONTENTS OF WARNING, CAUTION, AND DATA PLATES (Contd)

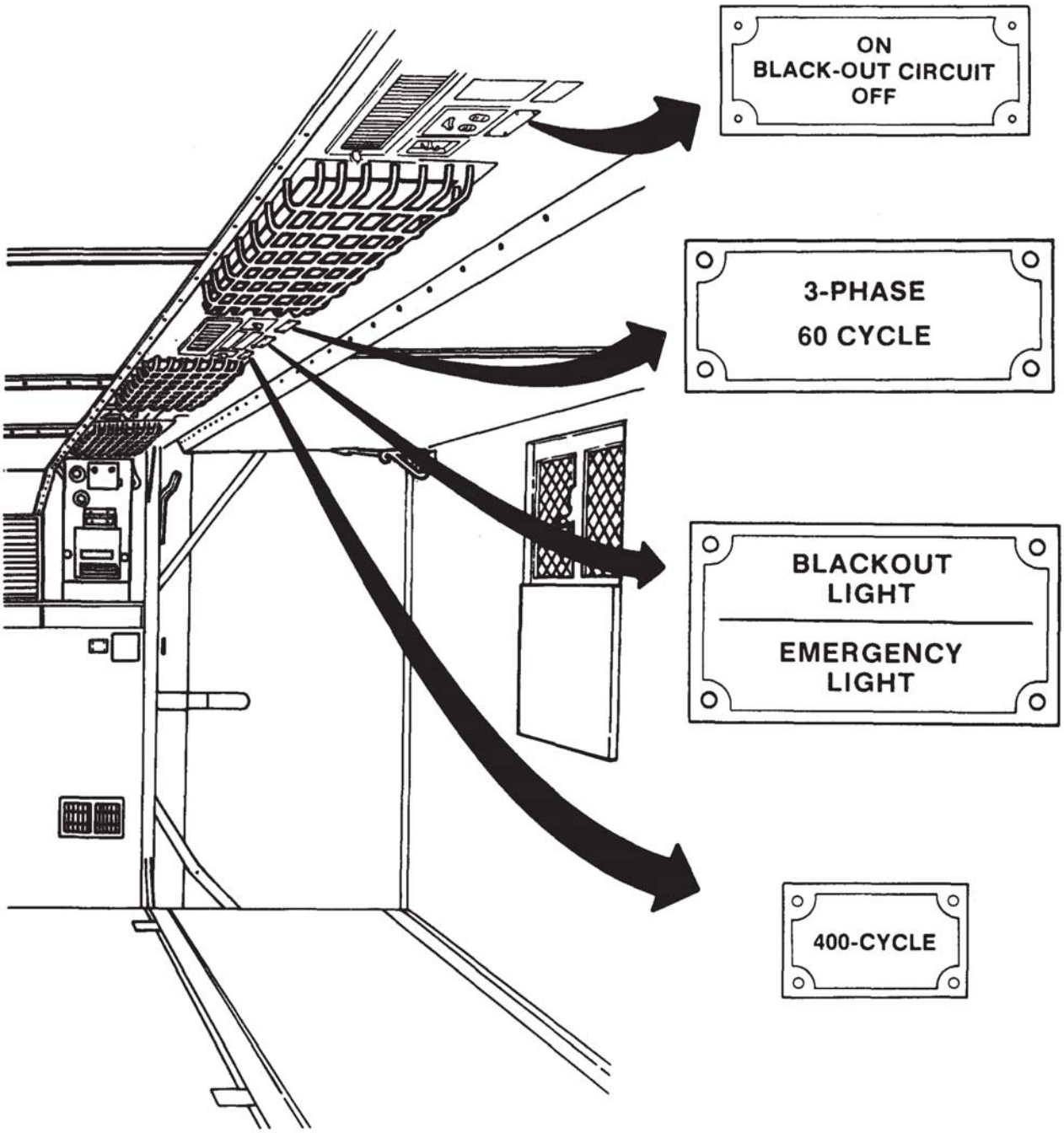

1-13. LOCATION AND CONTENTS OF WARNING, CAUTION, AND DATA PLATES (Contd)

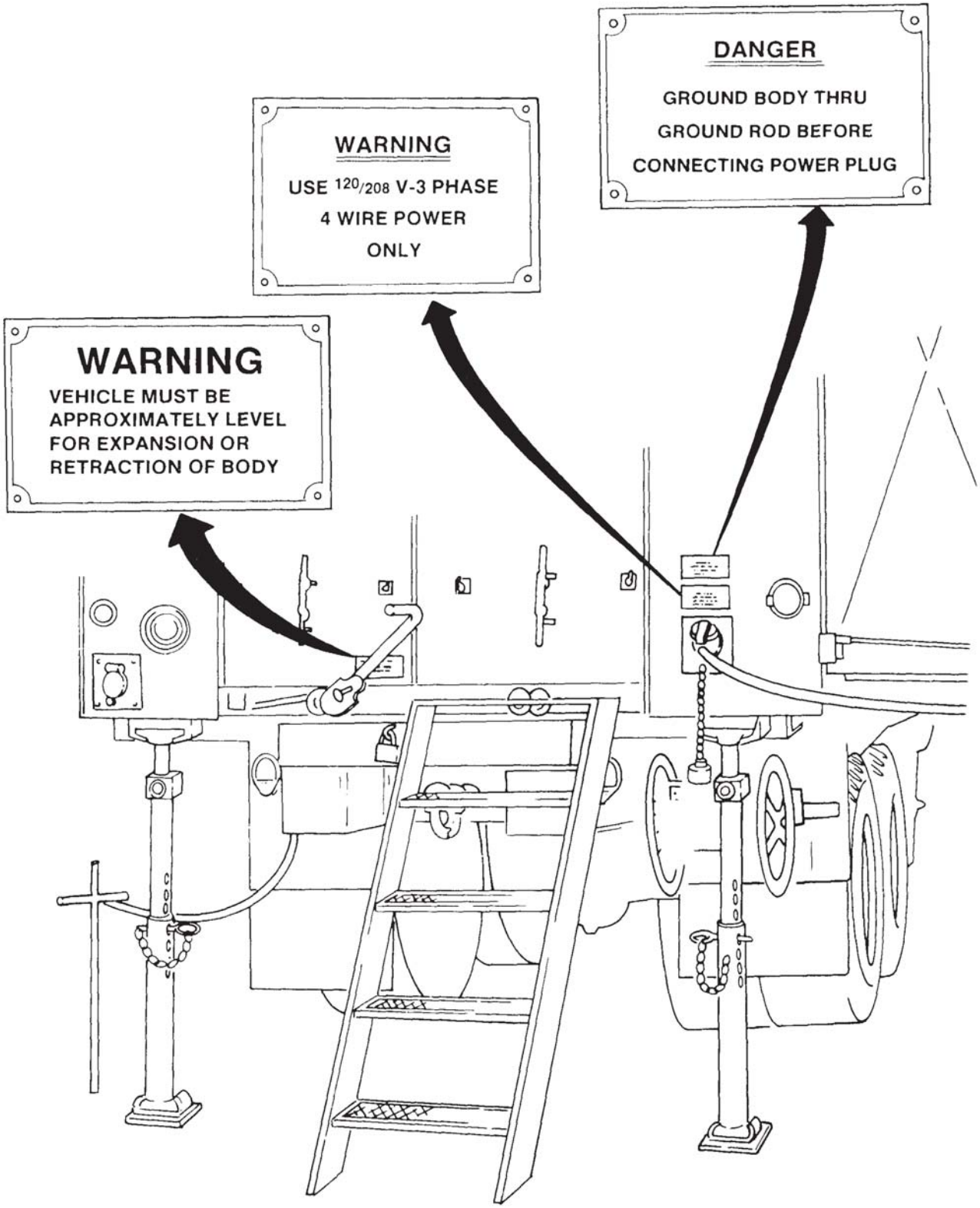

1-13. LOCATION AND CONTENTS OF WARNING, CAUTION, AND DATA PLATES (Contd)

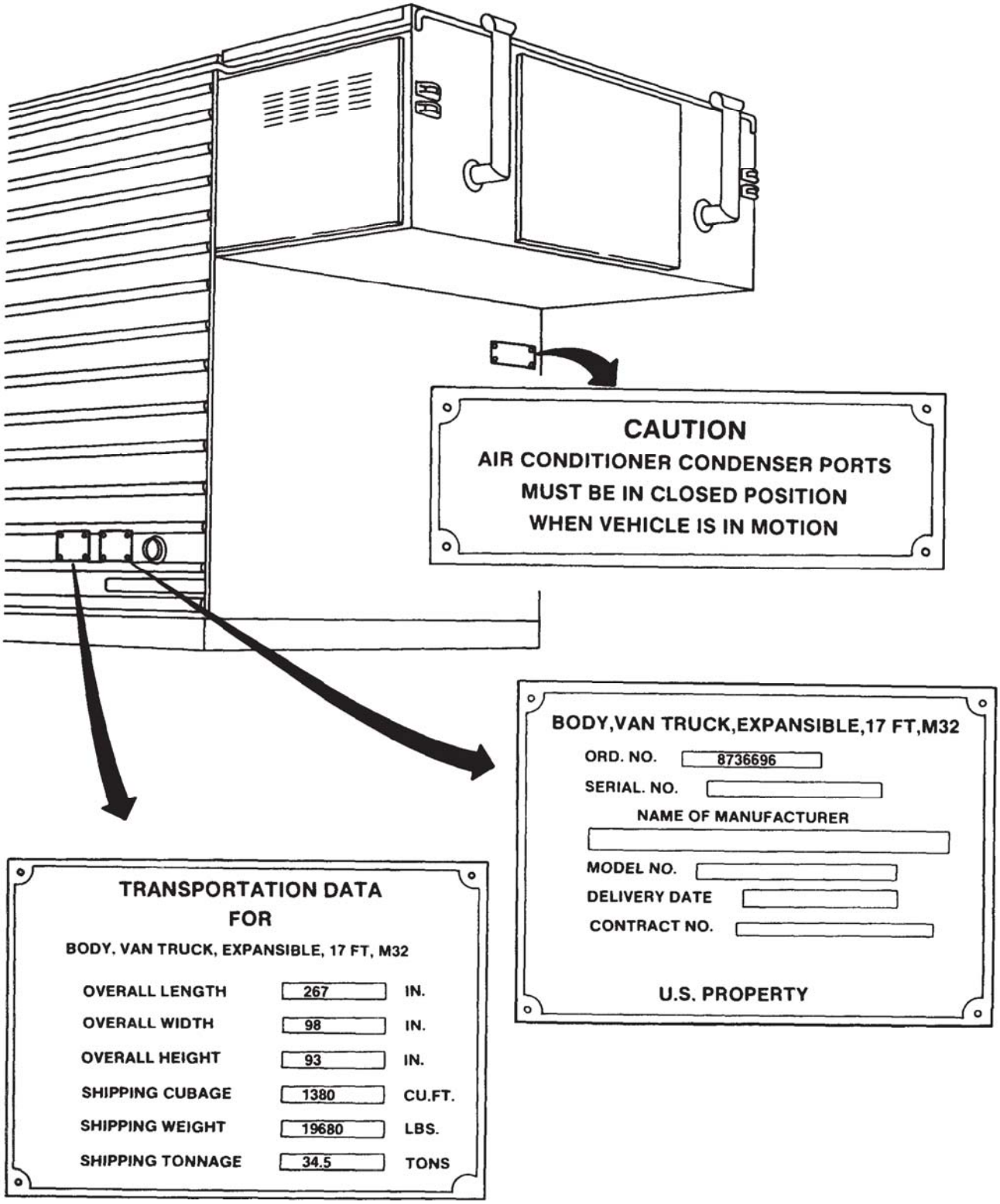

1-14. DIFFERENCES BEWEEN MODELS

Table 1-1. Differences Between Models.

EQUIPMENT/FUNCTION	M813	M813A1	M814	M815	M816	M817	M818	M819	M820	M820A1	M820A2	M821
Personnel/Cargo Operations	x	x	x	x		x						x
Wrecker Operations					x			x				
Dump Operations						x						
Fifth Wheel Operations							x	x				
Communications/Electronic/ Shop Repair Operations									x	x	x	
Front Winch	x	x	x	x	x	x	x	x				
Midships Winch				x								
Rear Winch					x							
Wheelbase:												
167 in. (424 cm)						x	x					
179 in. (455 cm)	x	x		x	x							
215 in. (546 cm)			x					x	x	x	x	x
Floodlights					x			x				x
Body:												
Cargo Dropside		x										
Cargo (Permanent Sides)	x		x			x						
Dump						x						
Tractor							x					
Wrecker					x			x				
Van									x	x	x	
Crane					x			x				
Fuel Tanks:												
Single Tank	x	x	x	x				x	x	x	x	x
Dual Tanks:												
110 gal. (416 L)						x	x					
133 gal. (503 L)					x							
Hydraulic Liftgate											x	
Tire Size:												
11 x 20	x	x	x	x	x	x	x		x	x	x	
12 x 20							x					
14 x 20								x				X

1-15. VEHICLE PERFORMANCE DATA

Equipment performance data for the M809 series vehicles is listed in table 1-2. This information includes only that data applicable to unit maintenance. Information not covered can be found in TM 9-2320-260-10 or LO 9-2320-260-12.

Table 1-2. Equipment Performance Data.

NOTE

Standard and metric measurements will be used in this table. A list of their abbreviations is provided below.

MEASUREMENT	ABBREVIATION
Ampere	A
Celsius	C
Centimeter	cm
Cubic Inch	cu in.
Cubic Meter	cu m
Fahrenheit	F
Gallon	gal.
Horsepower	hp
Inch	in.
Kilogram	kg
Kilometers Per Liter	km/L
Kilopascal	kPa
Kilowatt	kw
Liter	L
Miles Per Gallon	mpg
Newton Meter	N·m
Pint	pt
Pound-Feet	lb-ft
Pounds Per Square Inch	psi
Quart	qt
Revolutions Per Minute	rpm
Volt	V

	STANDARD	METRIC
1. PAYLOAD		
M813, M813A1, M814, M815, M817, M821	10,000 lb	4,540 kg
M816	7,000 lb	3,178 kg
M818	15,000 lb	6,180 kg
M819	12,000 lb	5,448 kg
M820, M820A1, M820A2	5,000 lb	2,270 kg
2. CAPACITIES		
Cooling System:		
WO/Heater Kit	32 qt	30 L
W/Heater Kit	42 qt	40 L
Engine Crankcase:		
WO/Filter	23 qt	22 L
W/Filter	27 qt	26 L
Differentials (Front and Rear)	12 qt	11 L
Transmission:		
WO/PTO	9 qt	8 L
W/PTO	11 qt	10 L
Dump Body Hydraulic System (M817)	37 qt	35 L
Fuel Tank(s):		
Single Tank (M813, M813A1, M814, M815, M819, M820, M820A1, M820A2, M821)	78 gal.	295 L
Dual Tanks:		
M816	133 gal.	503 L
M817, M818	110 gal.	416 L
Liftgate Hydraulic Tank (M820A2)	12 qt	11 L
Steering System	5.25 qt	5 L
Transfer Case	7 qt	7 L
Winch(es):		
Front	2.6 pt	1.2 L
Midship (M815)	2.6 pt	1.2 L
Rear	3.0 pt	1.4 L
Front End Frame	1.75 pt	0.83 L
Midship End Frame (M815)	1.75 pt	0.83 L

Table 1-2. Equipment Performance Data(Contd).

	STANDARD	METRIC
3. ENGINE		
Manufacturer	Cummins Engine Co.	
Model	NHC-250	
Type	Diesel, liquid-cooled	
Weight	2,498 lb	1,134 kg
Idle Speed	600-650 rpm	
Operating Speed	1500-2100 rpm	
Brake Horsepower	240 hp @ 2100 rpm	179 kw @ 2100 rpm
Cylinders	6 (in-line)	
Ignition System	Compression	
Firing Order	1-5-3-6-2-4	
Bore	5.50 in.	14.0 cm
Stroke	6.00 in.	15.0 cm
Displacement	885 cu in.	15 cu m
Compression Ratio	15.8:1	
Compression Pressure (@ 1000 rpm)	500-600 psi	3448-4137 kPa
Maximum Torque (@ 1500 rpm)	658 lb-ft	892 N·m
Governed Speed:		
Full Load	2100 rpm	
No Load	2400 rpm	
Fuel Consumption (Approx)	4.4 mpg	1.87 km/L
4. FUEL SYSTEM		
Fuel Pump (Mechanical):		
Make	Cummins Engine Co.	
Model	PT (pressure time)	
Type	G	
Location	Side of engine, left side center	
Fuel Filter:		
Make	Cummins Engine Co.	
Model	Fleet Guard	
Air Cleaner:		
Make	United Air Cleaner Div., UFC	
Type	Dry element	
5. COOLING SYSTEM		
Surge Tank Cap Pressure	14 lb	6.4 kg
Thermostat:		
Make	American Standard	
Type	Modulating	
Starts to Open	175°F	79°C
Fully Open	195°F	91°C
Water Pump:		
Make	Cummins Engine Co.	
Type	Centrifugal impeller	
Radiator:		
Make	McCord	
Type	Standard down flow	
Fan:		
Make	Dayco-Cummins	
Type	Six-blade, 24 in.	

Table 1-2. Equipment Performance Data (Contd).

	STANDARD	METRIC
6. ELECTRICAL SYSTEM		
Batteries:		
Model	6TN	
Voltage	12V	
PlatesPerCell	23	
Number of Batteries Used	4	
Specific Gravity (Full Charged)	1.275/ 1.280@70°F	1.275/ 1.280@21°C
Alternator:		
Model	AMA	
Voltage Output	28V	
Maximum Output	60A	
Voltage Regulator	Mounted internally	
Model	A001.2256A	
Voltage Output	28V	
Maximum Output	100A	
Voltage Regulator	Mounted internally	
Starter		
Model	MFY	
Voltage	24V	
7. TRANSMISSION		
Make	Dana	
Model	6453	
Type	Synchromesh	
Speeds Forward	5	
SpeedsReverse	1	
GearRatios:		
1st	6.07.1	
2nd	3.40.1	
3rd	1.79.1	
4th	1.00.1	
5th	0.78.1	
Reverse	6.09.1	
8. TRANSFERCASE		
Make	Rockwell Standard	
Model	T-138	
Type	Automatic front axle drive	

Section III. PRINCIPLES OF OPERATION

1-16. GENERAL

This section explains how components of the 5-ton, M809 series vehicles work together. A functional description of these components and their related parts will be covered in the following paragraphs. Electrical wiring schematics shown are for reference only and are not to be used for troubleshooting. To find the operation of a specific system or component, see the principles of operation reference index below.

1-17. PRINCIPLES OF OPERATION REFERENCE INDEX

PARA. NO.	TITLE	PAGE NO.
1-18.	Control Systems Operation	1-36
1-19.	Power Systems Operation	1-45
1-20.	Electrical Systems Operation	1-56
1-21.	Compressed Air and Air-Hydraulic Brake System Operation	1-62
1-22.	Special Purpose Bodies Systems Operation	1-64

1-18. CONTROL SYSTEMS OPERATION

The control systems include those controls and their related parts that are essential to the operation of the vehicle. These controls are common to all vehicles with the exception of transfer case power takeoff controls. Each of these parts will be described as part of the following systems:

a. Starting System Operation (page 1-38).
b. Cold Starting System Operation (page 1-38).
c. Accelerator Controls System Operation (page 1-39).
d. Parking Brake System Operation (page 1-40).
e. Steering System Operation (page 1-41).
f. Clutch Control System Operation (page 1-43).
g. Transfer Case and Power Takeoff Control Systems Operation (page 1-44).

a. Starting System Operation.

The starting system will start the engine in all types of weather and has built-in protection that prevents starter engagement once the engine has started. Major components of the starting system are:

A BATTERIES - Four 6TN batteries provide 24-volt power to energize starter motor and electrical accessories.

B BATTERY SWITCH - Activates all electrical circuits except arctic heaters.

C IGNITION SWITCH - When engaged, provides battery power to starter solenoid. Has OFF, RUN, and START positions. Switch automatically returns from START to RUN when released,

D PROTECTIVE CONTROL BOX – Prevents engagement of starter motor once engine is running.

E STARTER MOTOR - When energized, converts electrical energy to mechanical power as it engages the flywheel to crank engine.

1-18. CONTROL SYSTEMS OPERATION (Contd)

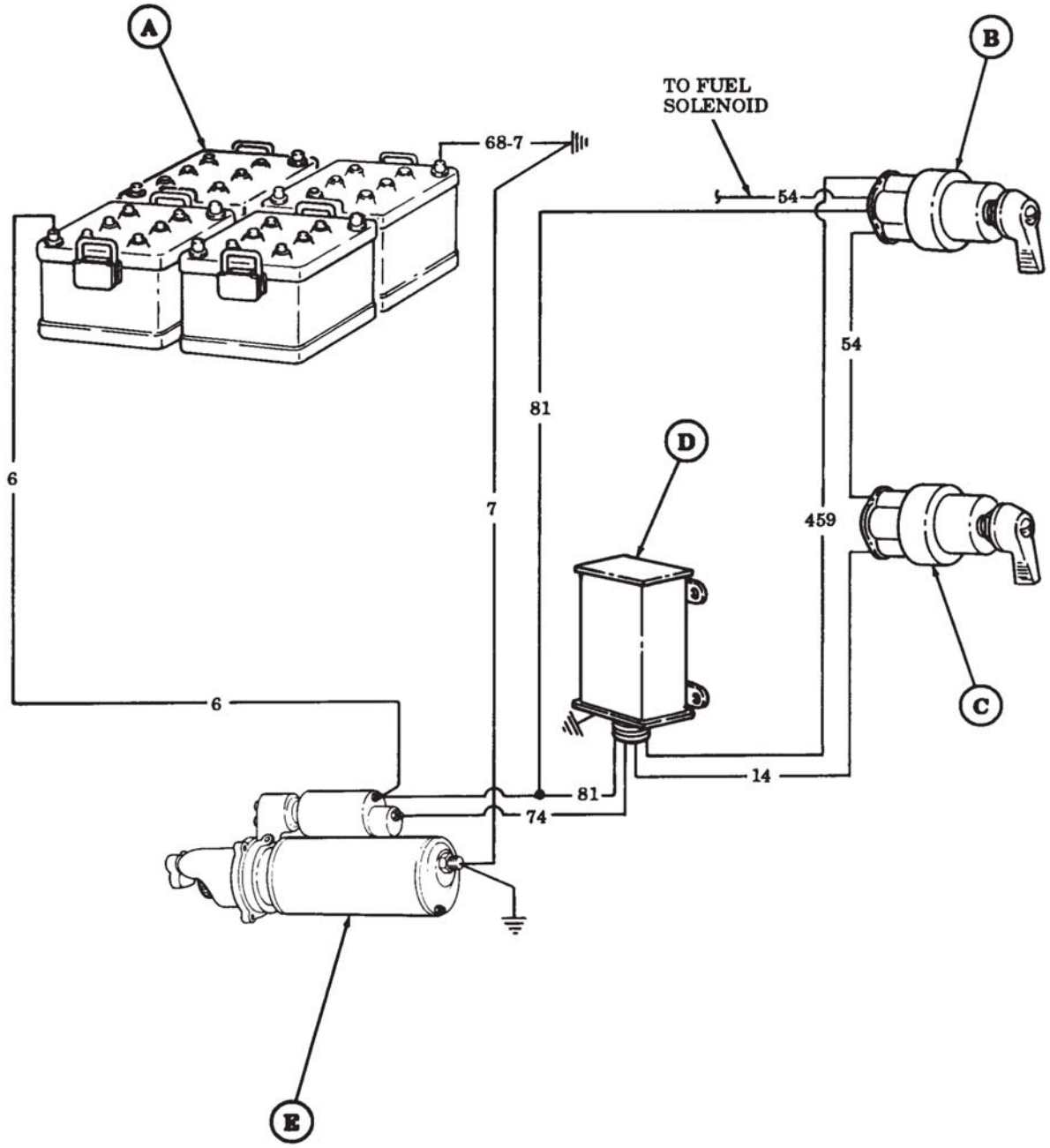

1-18. CONTROL SYSTEMS OPERATION (Contd)

b. Cold Starting System Operation.

The cold start system is an electrical and pneumatic system which allows engine starting in cold weather. Major components of the cold starting system are:

A **COLD START INDICATING LAMP** – Indicates cold start switch being placed in "ON" position.

B **FUEL PRIMER PUMP** - Increases fuel pressure to cold starting system and purges air from fuel system.

C **COLD START SWITCH** - Controls 12-volt power to activate or deactivate cold starting system.

D **COLD START PRESSURE GAGE** - Indicates pressure buildup when pumping cold start pump or purging fuel system of air.

E **COLD START GLOW PLUG** - Ignites fuel injected into air intake manifold by cold start nozzle.

F **COLD START RELAY** – Maintains glow plug voltage by reducing the resistance in series with glow plug during cranking.

G **COLD START RESISTOR** – Regulates 6-volt power to cold start indicator and glow plug.

H **COLD START NOZZLE** – Injects fuel under pressure into air intake manifold.

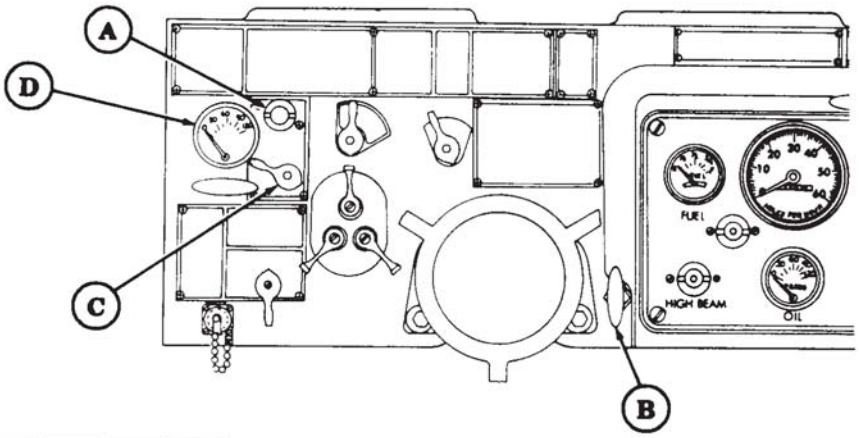

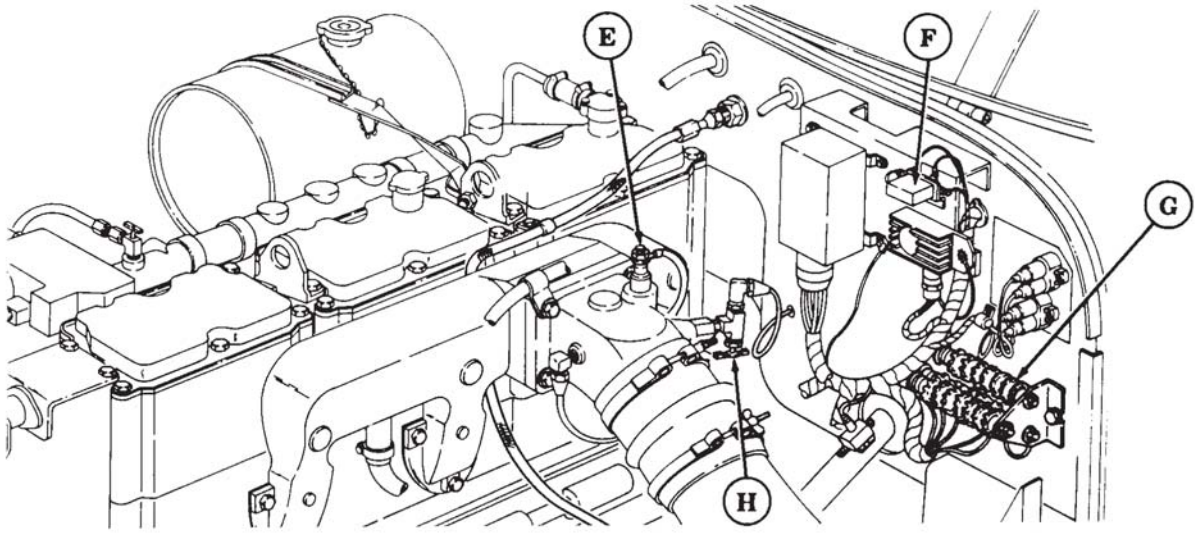

1-18. CONTROL SYSTEMS OPERATION (Contd)

c. Accelerator Controls System Operation.

The accelerator controls system permits the operator to control vehicle speed and engine power. Major components of the accelerator controls system are:

A HAND THROTTLE CONTROL - Sets engine speed at desired rpm without operator maintaining pressure on accelerator pedal.

B EMERGENCY STOP CONTROL - Cuts off fuel supply to engine when pulled.

C ACCELERATOR PEDAL - Controls engine speed.

D ACCELERATOR LINKAGE - Links accelerator pedal and throttle control to fuel pump.

1. Injection Pump Lever
2. Accelerator Rod
3. Return Spring
4. Pivot Lever

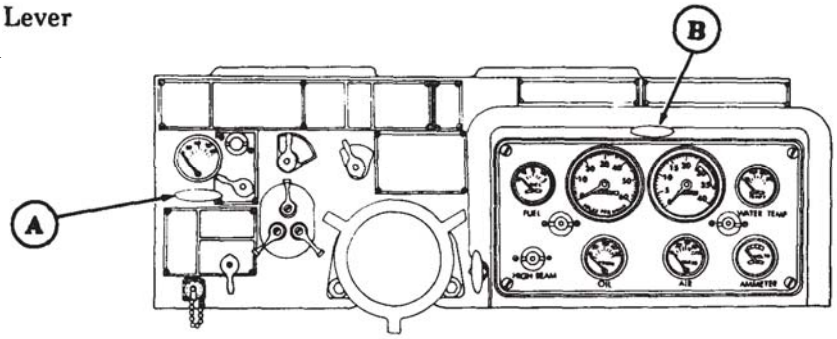

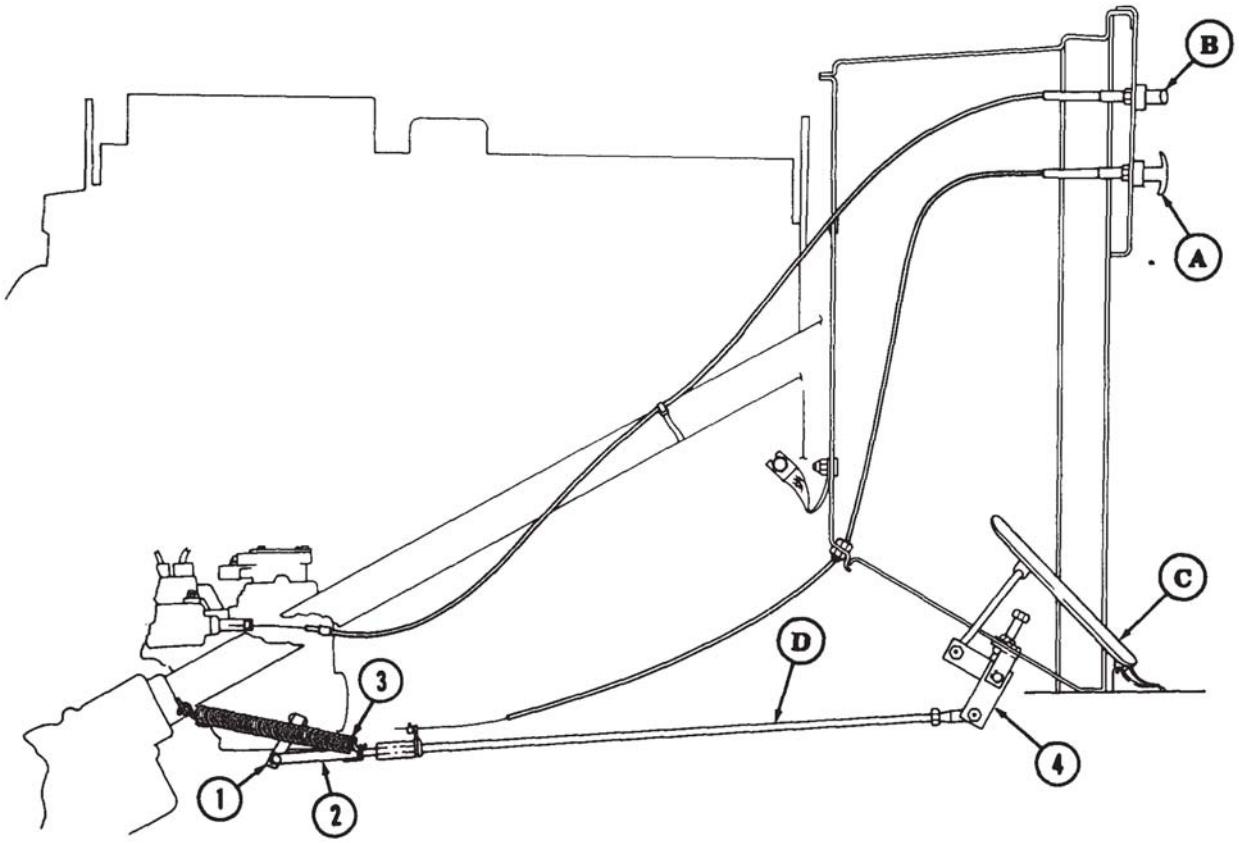

1-18. CONTROL SYSTEMS OPERATION (Contd)

d. Parking Brake System Operation.

The parking brake system is a manually-operated system that provides a means of keeping the vehicle motionless when it is stopped. Major components of the parking brake system are:

A PARKING BRAKE CONTROL LEVER – Sets parking brake when pulled to raised position. When lowered, parking brake is released.

B ADJUSTING KNOB - Permits operator to make minor tension adjustment in parking brake cable.

C PARKING BRAKE CABLE - Links parking brake lever to actuating lever.

D BRAKEDRUM – Provides surface for brakeshoes to press against when brakes are applied.

E ACTUATING LEVER – Forces inner and outer brakeshoes against brakedrum when parking brake control lever is raised.

F PARKING BRAKE ADJUSTING SCREW – Used to ensure full contact of brakeshoes with brakedrum.

G BRAKESHOES – Press against brakedrum when parking brake control lever is raised.

H ECCENTRIC PIN – Equalizes distance between brakeshoes and brakedrum.

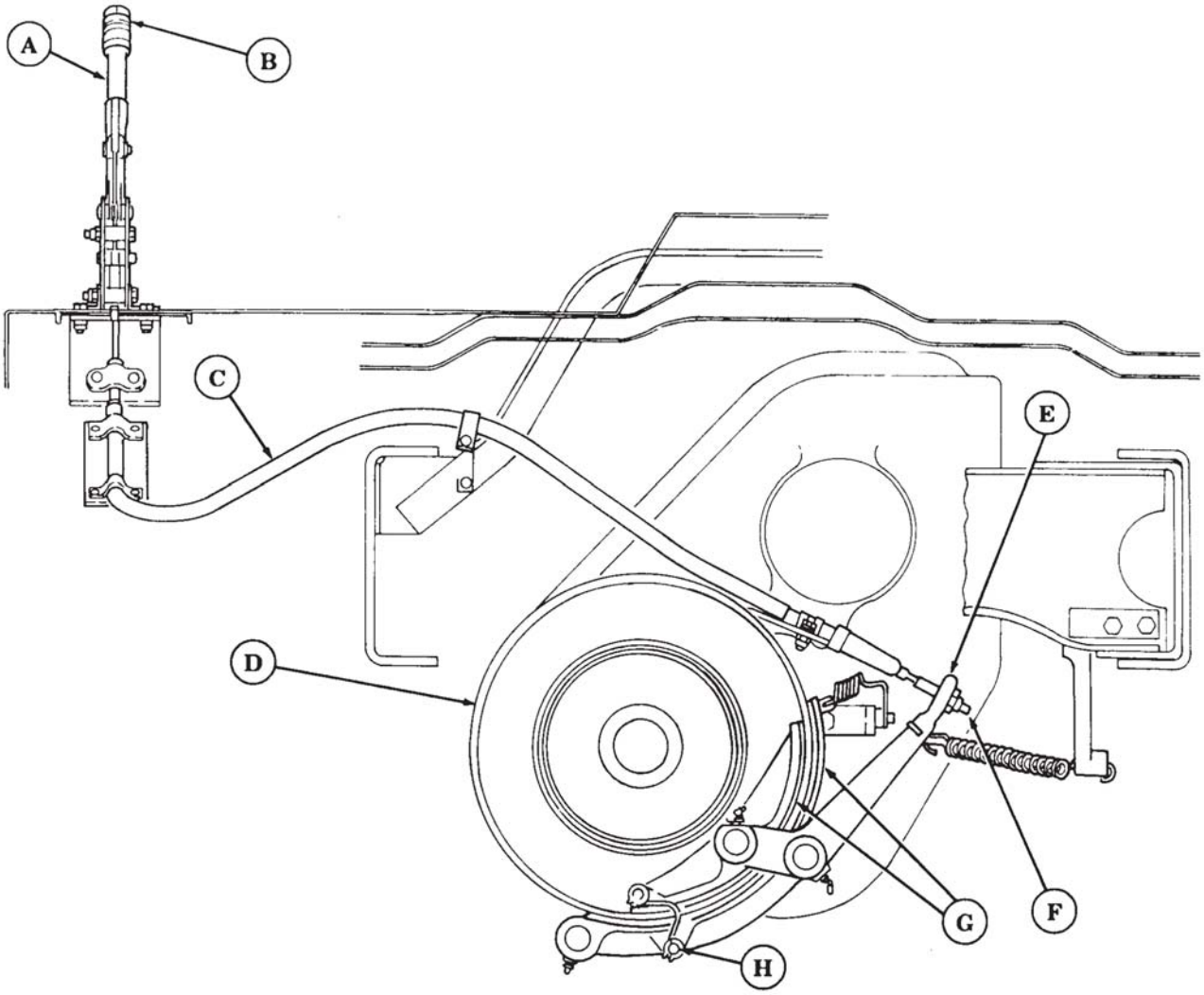

1-18. CONTROL SYSTEMS OPERATION (Contd)

e. Steering System Operation.

The steering system is identical for all models covered in this manual. It is a hydraulically-assisted system that provides ease of turning and control for the operator. Major components of the steering system are:

A **OIL RESERVOIR AND POWER STEERING PUMP** - Combined in one unit, the reservoir serves as an oil filling point and the pump mechanically creates pressure to supply oil throughout the steering system.

B **STEERING COLUMN** - Supports steering shaft through instrument panel and firewall to steering gear.

C **STEERING WHEEL** - Serves as manual steering control for operator.

D **STEERING COLUMN UNIVERSAL JOINT** - Connects, at an angle, the steering wheel column and input shaft of power steering gear.

E **POWER STEERING ASSIST CYLINDER** – Receives hydraulic measure from the steering rear to assist in turning the right wheel.

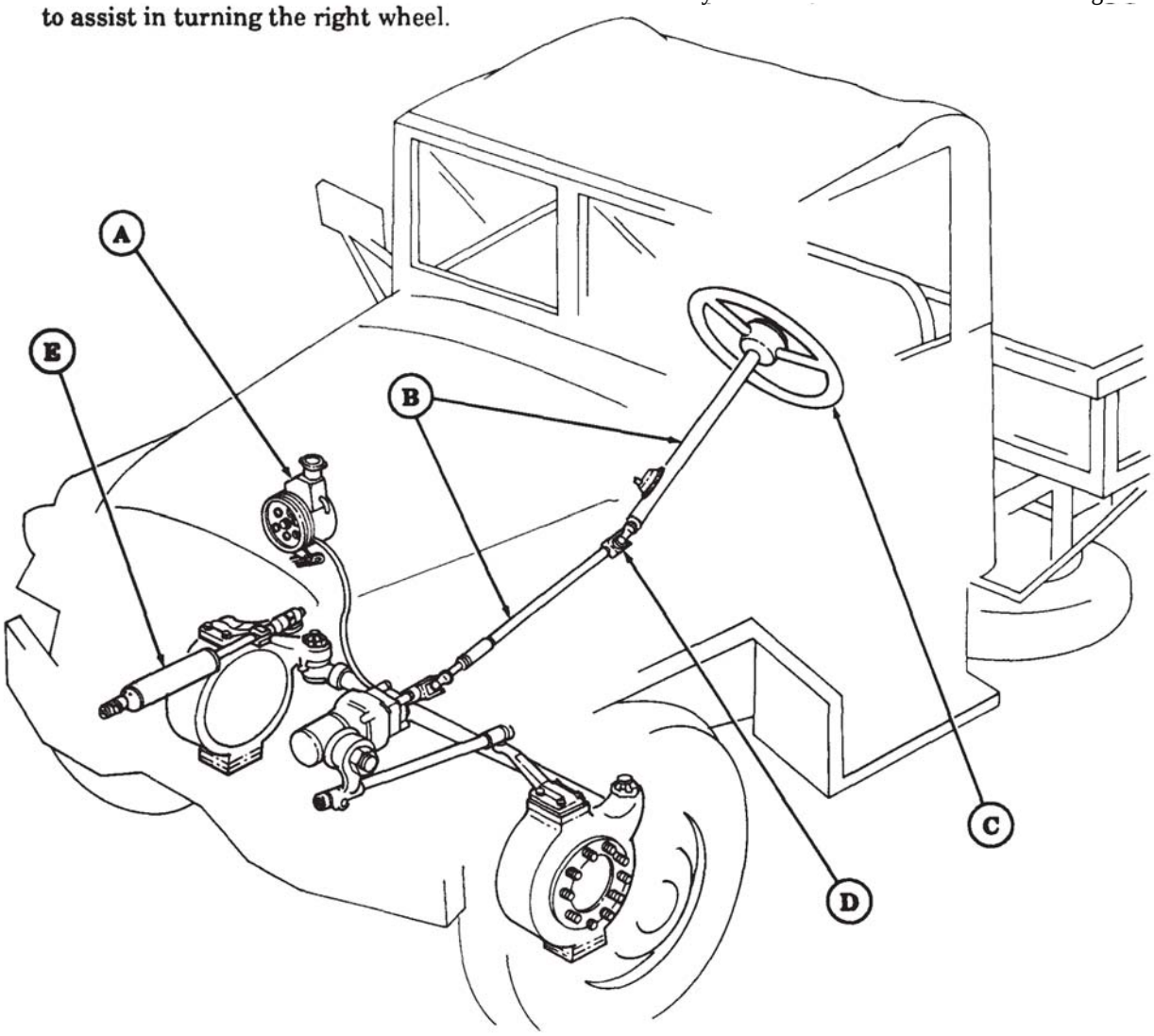

1-18. CONTROL SYSTEMS OPERATION (Contd)

e. Steering System Operation (Contd).

F **STEERING GEAR** – Converts hydraulic pressure from power steering pump into mechanical power at pitman arm.

G **TIE ROD ASSEMBLY** – Connects steering knuckles so both wheels will turn at the same time.

H **STEERING ARM** – Connects drag link to steering knuckle.

I **STEERING KNUCKLE** – Serves as the pivot point and link for the front wheel from the tie rod assembly.

J **DRAG LINK** – Transmits movement from pitman arm to steering gear at drag link.

K **PITMAN ARM** – Transfers steering torque from steering gear to drag link.

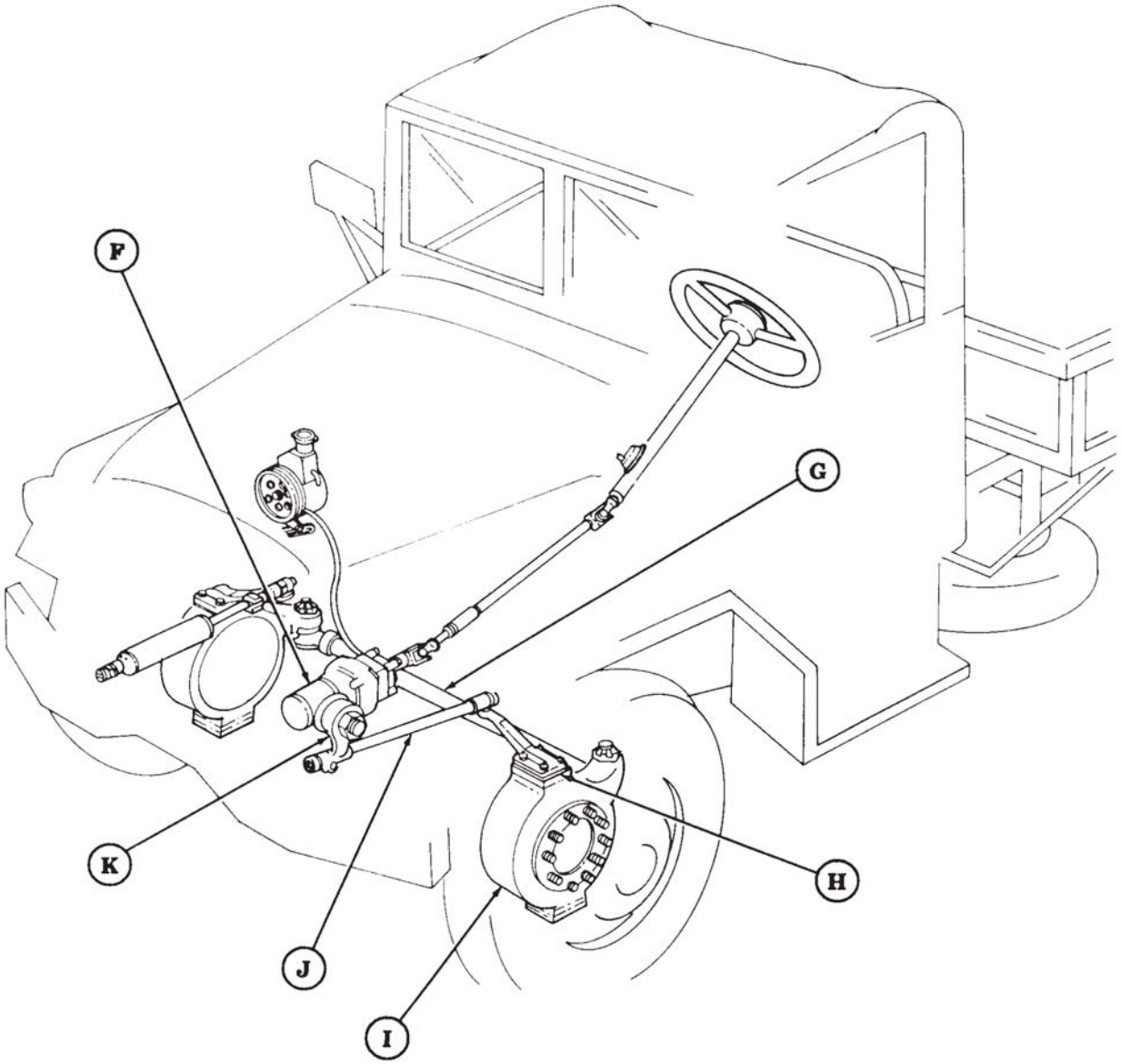

1-18. CONTROL SYSTEMS OPERATION (Contd)

f. Clutch control System Operation.

The clutch control system permits engagement and disengagement of transmission and transmission PTO. Major components of the clutch control system are:

A **CLUTCH PEDAL** - When pressed down it disengages transmission from engine. When released, engine and transmission are engaged.

B **REMOTE CONTROL LEVER** - Transmits movement of clutch rod to actuate clutch.

C **CLUTCH ROD** - Transmits movement from clutch pivot assembly to remote control lever and shaft, and is used to adjust clutch pedal free travel.

D **CLUTCH PIVOT ASSEMBLY** - Transfers torque from clutch lever to clutch rod.

E **CLUTCH LEVER** - Transmits movement from clutch pedal to clutch pivot assembly.

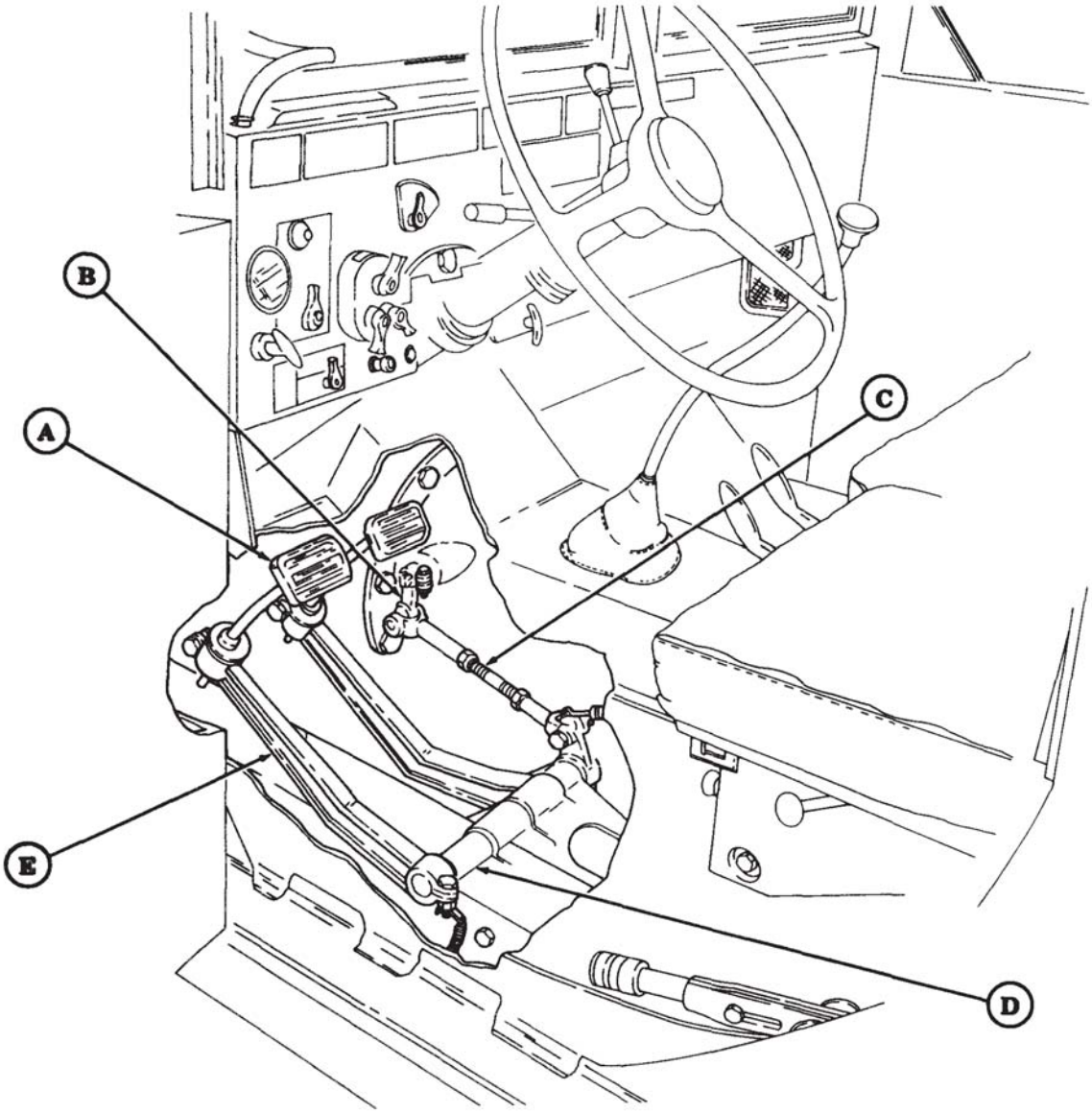

1-18. CONTROL SYSTEMS OPERATION (Contd)

g. Transfer Case and Power Takeoff Control Systems Operation.

The transfer case and power takeoff control systems provide power for auxiliary equipment and aid in the transporting of light and heavy loads. Major components of the transfer case and power takeoff control systems are:

A **TRANSFER CASE SELECTOR LEVER** - Pulled up to HIGH for light load conditions and pushed down to LOW for heavy load conditions.

B **POWER TAKEOFF (PTO) CONTROL LEVER -** Pulled up to engage or down to disengage power for auxiliary equipment.

C **POWER TAKEOFF (PTO) POWER TENSION ARM** - Transmits PTO control system movement to PTO input shaft.

D **POWER TAKEOFF (PTO) ADJUSTING LINK ROD** - Actuates and adjusts PTO control movement.

E **TRANSFER CASE SHIFT LEVER LINK -** Transmits transfer case selector lever movement.

F **TRANSFER CASE ADJUSTING LINK** - Transmits transfer case selector lever movement to transfer case shift input shaft.

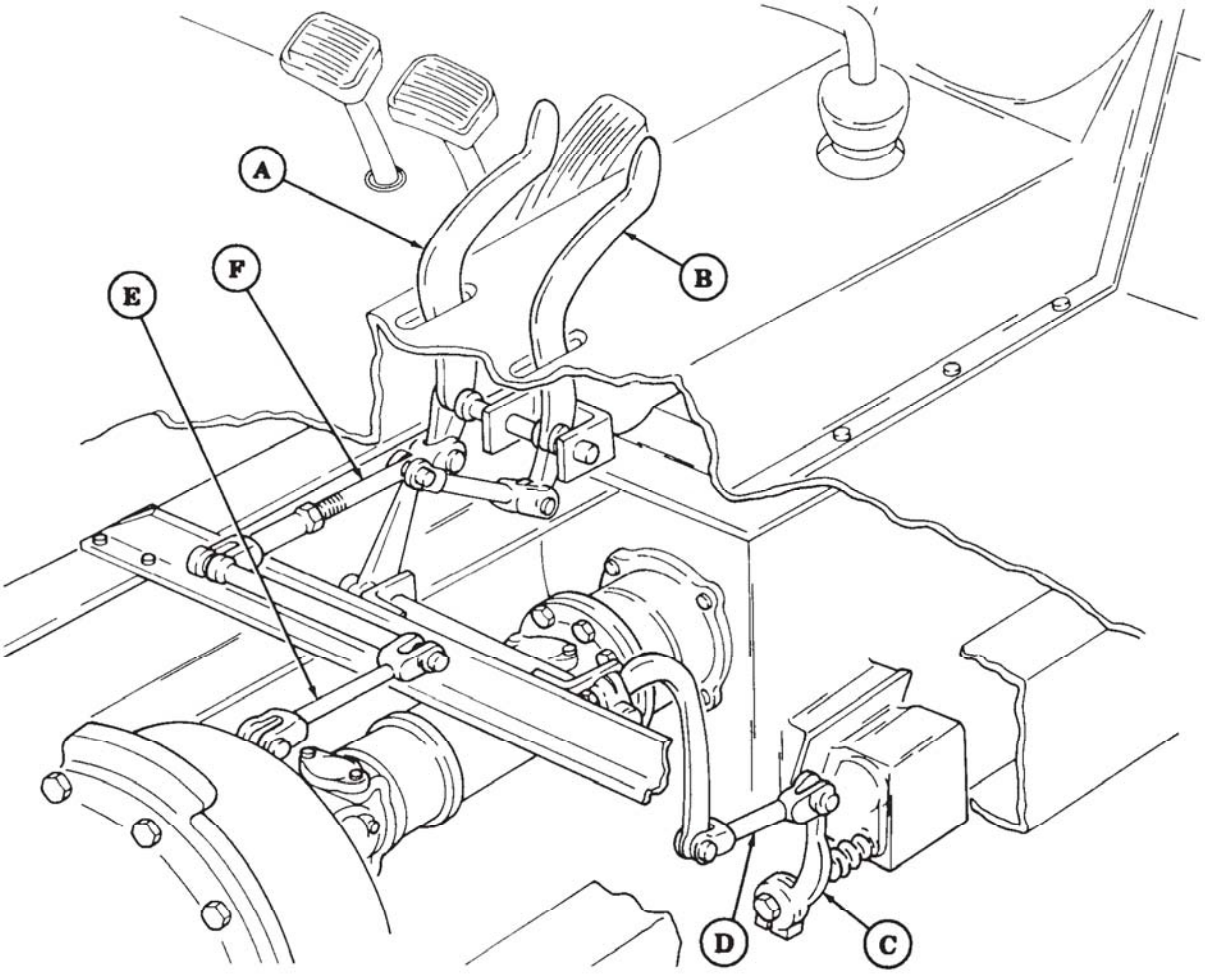

1-19. POWER SYSTEMS OPERATION

The power systems include those components that give all vehicles covered in this manual the power to move. Each of these components will be described as part of the following subsystems:

a. Engine Oil System Operation (page 1-45).
b. Powertrain System Operation (page 1-46).
c. Fuel System Operation - Single Tank (page 1-48).
d. Fuel System Operation - Dual Tanks (page 1-60).
e. Air Intake System Operation (page 1-52).
f. Exhaust System Operation (page 1-53).
g. Cooling System Operation (page 1-54).

a. Engine Oil System Operation.

The engine oil system provides lubricating oil for internal engine parts. Major components of the engine oil system are:

A OIL FILTERS - Filter oil of dirt and other foreign material to help ensure flow of uncontaminated oil to engine.
B ENGINE OIL PAN – Reservoir for engine oil.
C ENGINE OIL PAN DRAINPLUG - When removed, allows lubricating oil to be drained from engine.
D CRANKCASE BREATHER - Vents engine crankcase.
E OIL FILLER CAP - Covers engine oil fill opening.
F ENGINE OIL COOLER - Removes excess heat from engine oil as coolant circulates through internal tubes of oil cooler.
G OIL DIPSTICK - Indicates engine oil level.

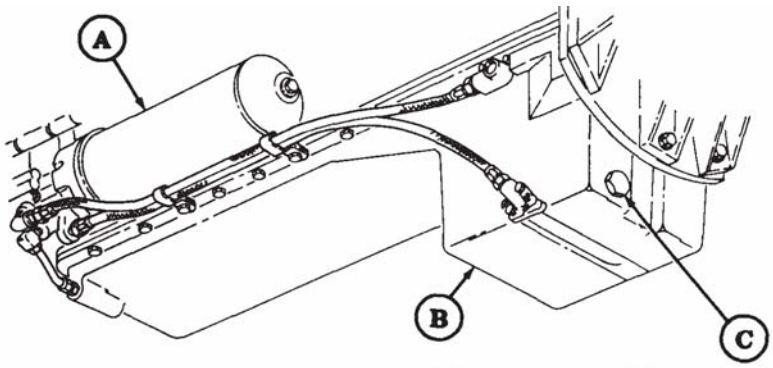

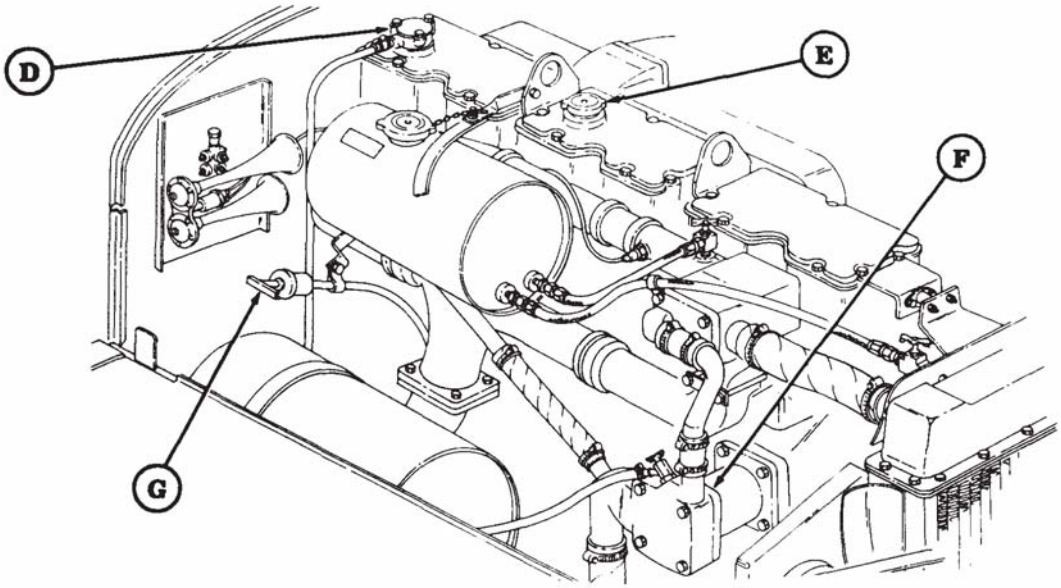

1-19. POWER SYSTEMS OPERATION (Contd)

b. Powertrain System Operation.

The powertrain system is the same on all models covered in this manual with the exception of the long wheelbase models which have an additional propeller shaft and center bearing. The powertrain transmits engine power to the vehicle. Major components of the powertrain are:

A **ENGINE –** Provides mechanical power for powertrain component operation.

B **TRANSMISSION –** Adapts engine power to meet different speeds and power requirements.

C **TRANSFER CASE –** Distributes power to front and rear axles.

D **UNIVERSAL JOINTS –** Permit power to be transmitted at slight angles between transmission and transfer case, and between transfer case and differentials.

E **DIFFERENTIALS -** Distribute power to left and right axle shafts independently.

F **AXLES –** Transmit power from differentials to wheels.

PROPELLER SHAFTS – Driveshafts that transmit power from the transmission to the transfer case and from transfer case to the differentials.

1. Front differential-to-transfer case propeller shaft
2. Transmission-to-transfer case propeller shaft
3. Transfer case-to-forward-rear differential propeller shaft
4. Forward-rear differential to rear-rear differential propeller shaft

1-19. POWER SYSTEMS OPERATION (Contd)

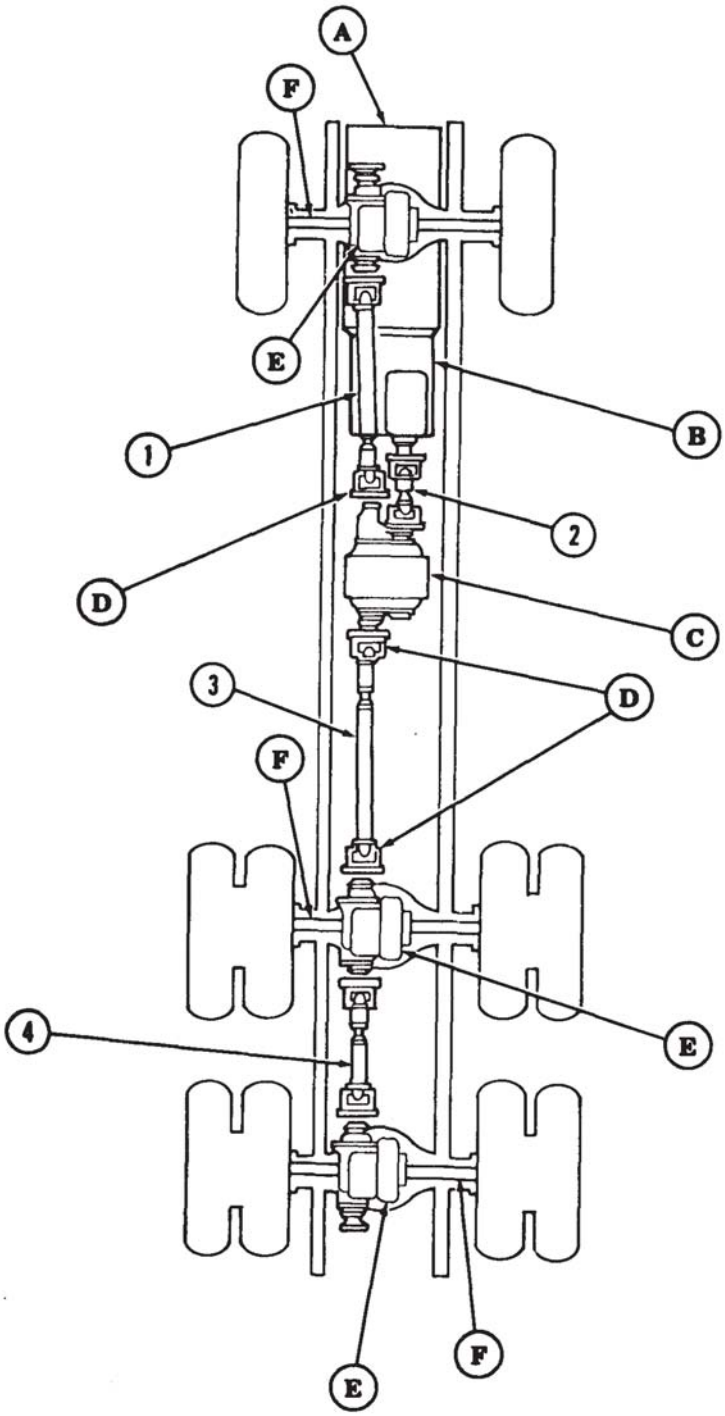

1-19. POWER SYSTEMS OPERATION (Contd)

c. Fuel System Operation - Single Tank

A **FUEL PUMP -** Draws fuel from tank and supplies it to fuel injectors.

B **BREATHER -** Vents vapors collected from tank.

C **FUEL TANK VENT LINE –** Vents vapors from front and rear of tank through breather.

D **FUEL RETURN LINE -** Returns unused fuel back to tank.

E **FUEL LEVEL SENDING UNIT –** Electrical signal registers fuel level in tank at gage on instrument cluster.

F **FUEL FILLER CAP -** Covers fuel filler opening.

G **FUEL TANK –** Stores fuel for vehicle use.

H **FUEL TANK-TO-FILTER SUPPLY LINE –** Directs fuel from tank to fuel filter.

I **FUEL FILTER/WATER SEPARATOR –** Filters water and dirt from fuel.

J **FUEL FILTER-TO-FUEL PUMP SUPPLY LINE –** Directs fuel from filter to fuel pump.

K **FUEL FILTER DRAIN VALVE –** Opened prior to purging fuel filter/water separator of water and dirt.

1-19. POWER SYSTEMS OPERATION (Contd)

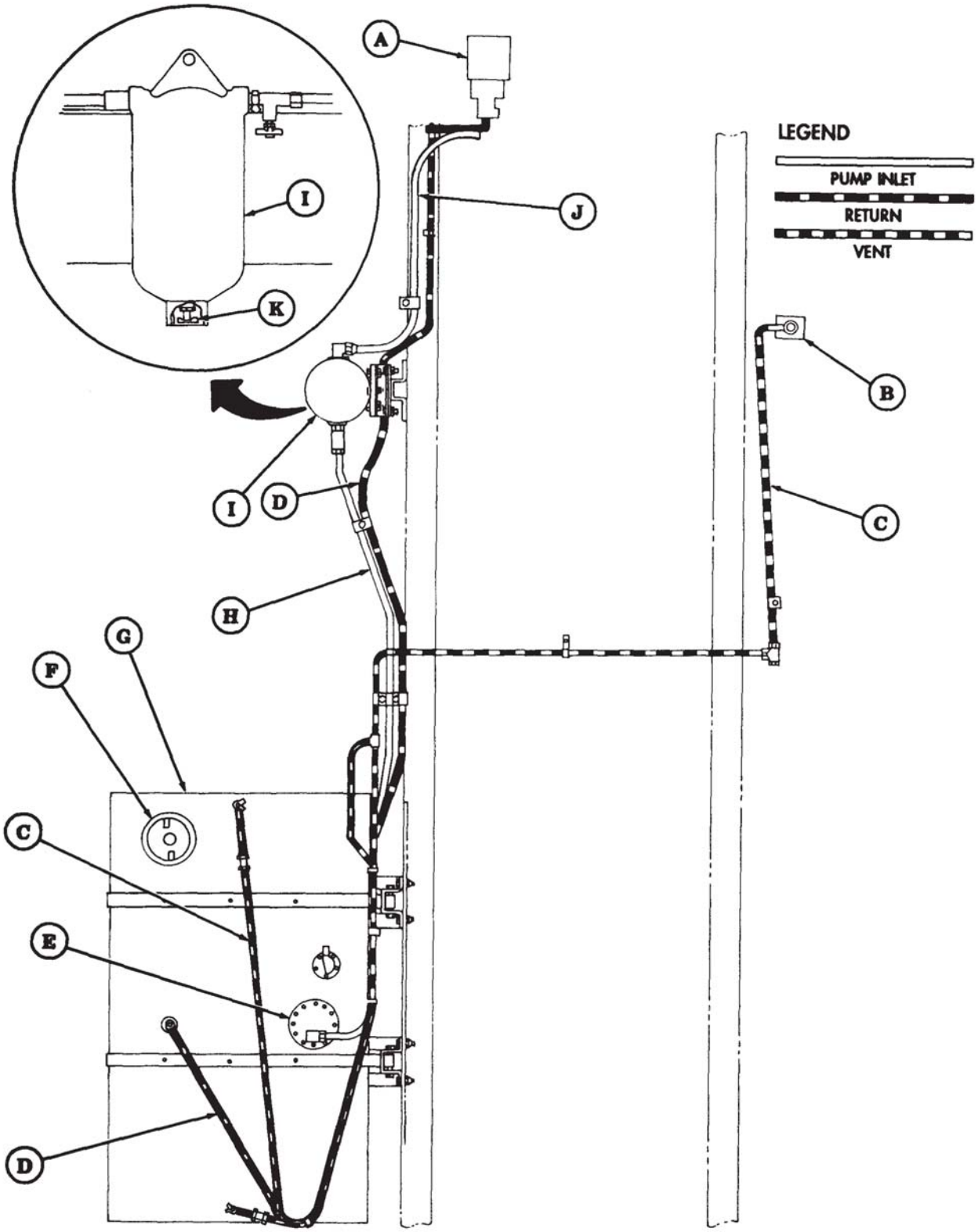

1-19. POWER SYSTEMS OPERATION (Contd)

d. Fuel System Operation - Dual Tanks.

A **FUEL PUMP** – Draws fuel from tanks and supplies it to fuel injectors.

B **BREATHER** – Vents vapors collected from fuel tanks.

C **FUEL TANK VENT LINE** – Vents vapors from left and right fuel tanks and directs them to breather.

D **FUEL TANKS** - Stare fuel for vehicle use.

E **FUEL FILLER CAP** - Covers fuel filler opening.

F **FUEL LEVEL SENDING UNIT** - Electrical signal registers fuel level in tanks at gage on instrument cluster.

G **FUEL TANK-TO-SELECTOR VALVE SUPPLY LINE** - Directs fuel from tank to selector valve.

H **FUEL RETURN LINE** - Returns unused fuel to tanks.

I **FUEL SELECTOR VALVE** - Manual control valve that opens fuel flow to engine from left or right fuel tanks.

J **SELECTOR VALVE-TO-FUEL FILTER SUPPLY LINE** - Directs fuel from selector valve to fuel filter.

K **FUEL FILTER/WATER SEPARATOR -** Filters water and dirt from fuel system.

L **FUEL FILTER-TO-FUEL PUMP SUPPLY LINE** - Directs fuel from fuel filter to fuel pump.

M **FUEL FILTER DRAIN VALVE** - Opened prior to purging fuel filter/water separator of water and dirt.

1-19. POWER SYSTEMS OPERATION (Contd)

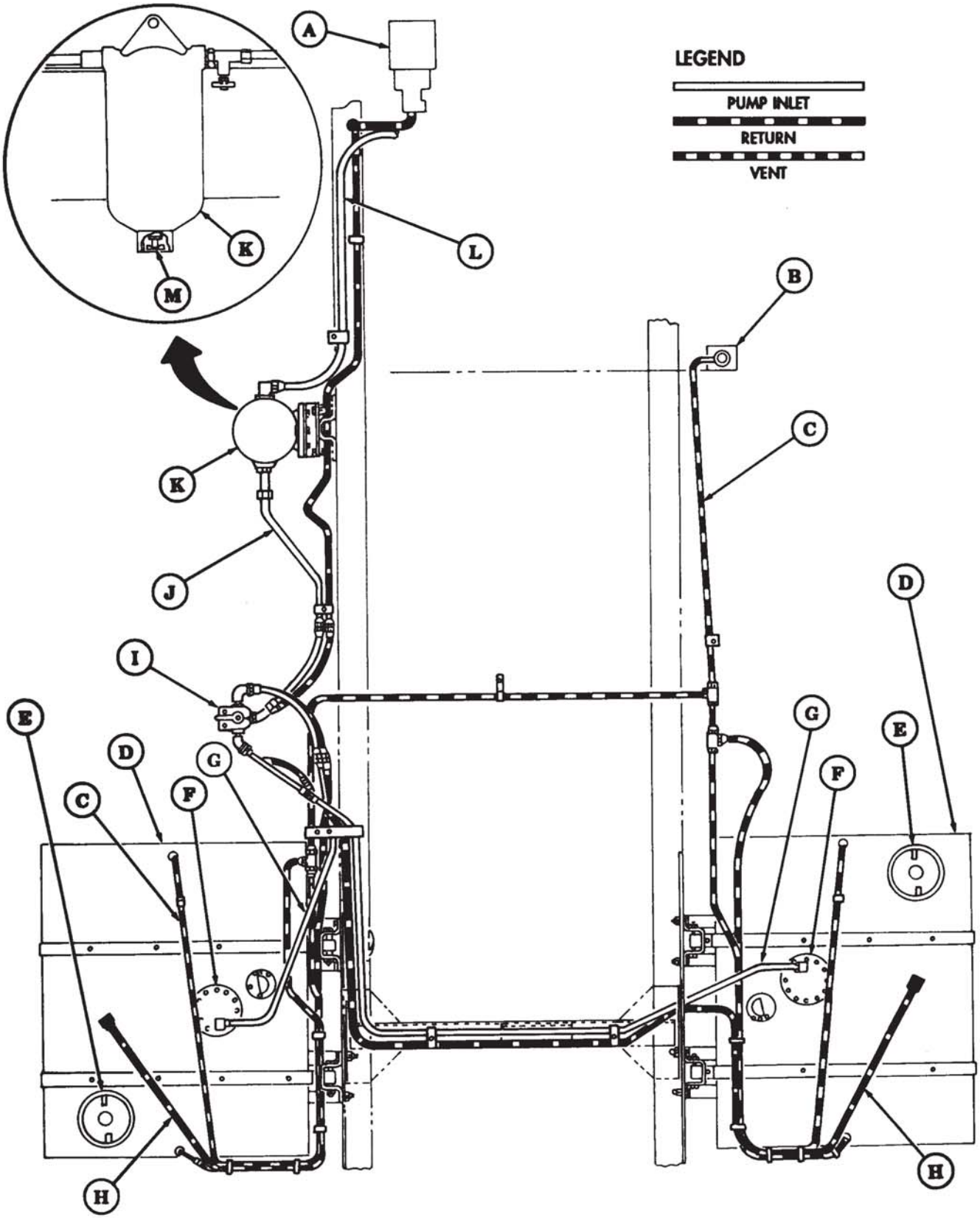

1-19. POWER SYSTEMS OPERATION (Contd)

e. Air Intake System Operation.

A AIR INTAKE MANIFOLD - Directs air to combustion chamber in each cylinder.

B AIR CLEANER INDICATOR - Shows red when air filter needs servicing.

C AIR CLEANER OUTLET TUBE - Directs air from air cleaner to intake manifold.

D AIR CLEANER CAP - Covers opening in air cleaner. Regulates air flow into air cleaner.

E AIR CLEANER - Filters dust and dirt from air.

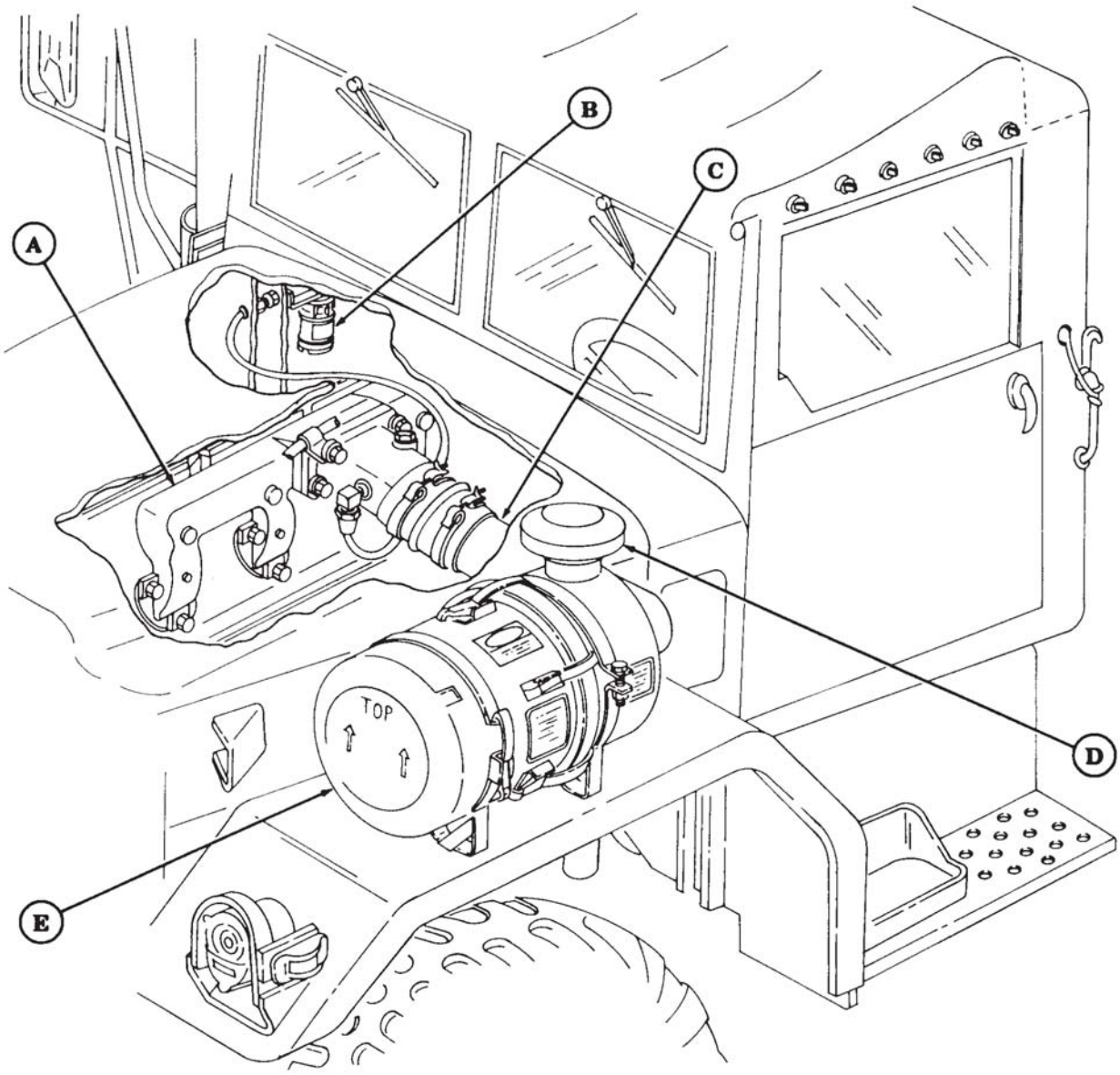

1-19. POWER SYSTEMS OPERATION (Contd)

f. Exhaust System Operation.

A EXHAUST STACK - Directs exhaust gases from muffler away from vehicle.

B EXHAUST MANIFOLD - Collects exhaust gases from cylinders and directs them to muffler.

C EXHAUST MUFFLER - Quiets exhaust noises.

D EXHAUST PIPE - Directs exhaust gases from muffler to exhaust stack.

E EXHAUST SHIELD - Protects personnel from exhaust pipe and stack heat.

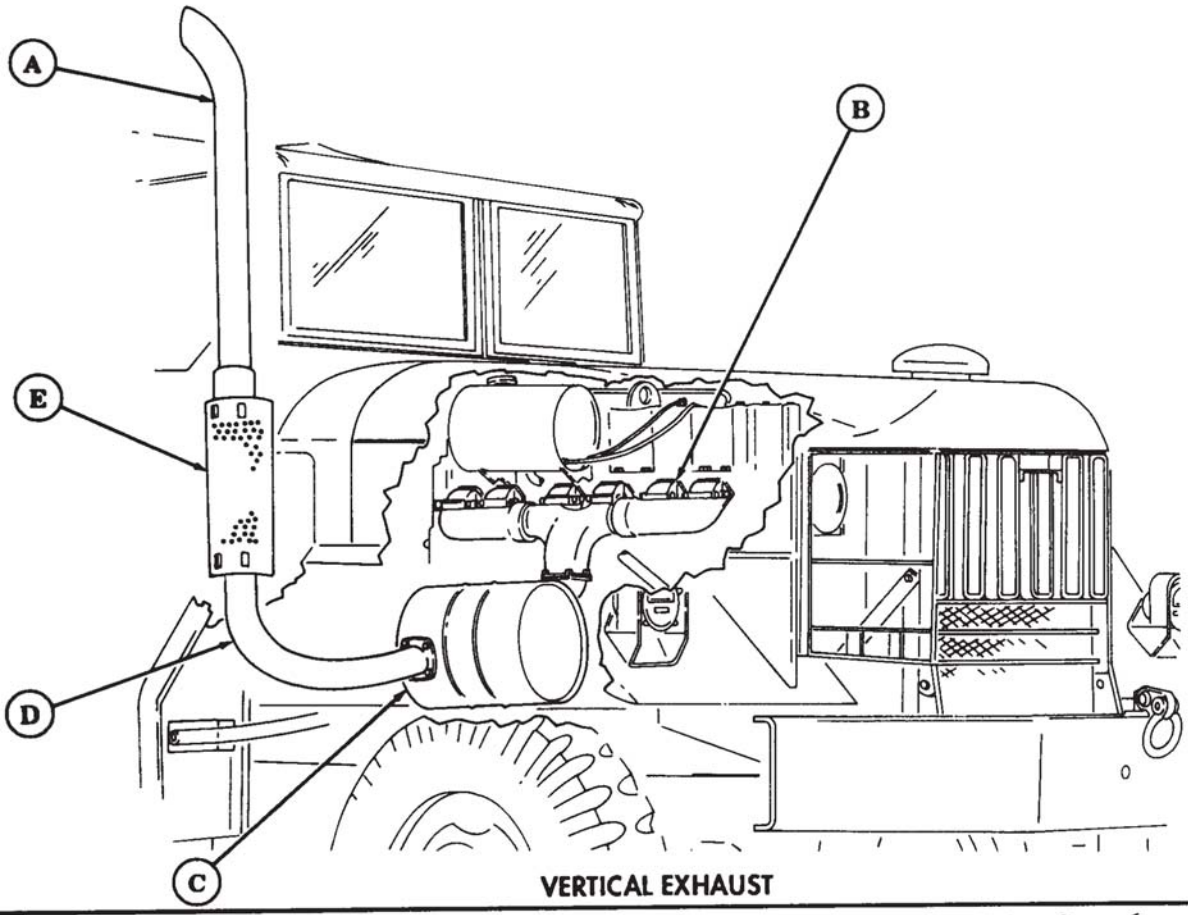

VERTICAL EXHAUST

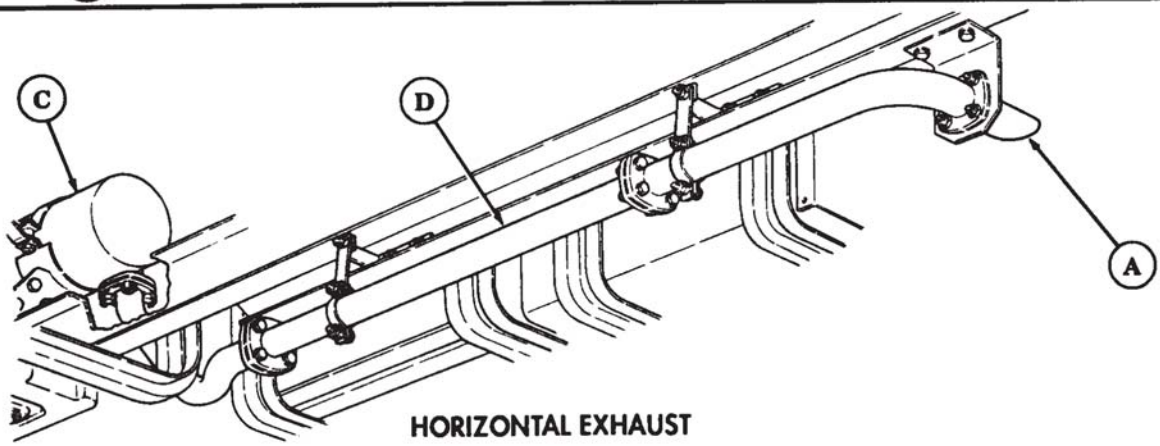

HORIZONTAL EXHAUST

1-19. POWER SYSTEMS OPERATION (Contd)

g. Cooling System Operation.

A **SURGE TANK** - Filling point for cooling system.

B **WATER MANIFOLD -** Collects coolant from cylinder heads and directs it to thermostat housing where it is redirected through system.

C **WATER TEMPERATURE SENDING UNIT -** Sends signal indicating engine coolant temperature to gage on instrument panel.

D **SURGE TANK-TO-WATER MANIFOLD VENT HOSE** - Vents air trapped in water manifold.

E **THERMOSTAT** - Shuts off coolant flow to radiator until engine temperature reaches 175°F (79°C). Coolant is then directed to radiator.

F **SURGE TANK-TO-RADIATOR VENT HOSE** - Vents air from cooling system.

G **RADIATOR INLET TUBE** - Directs coolant from water manifold to radiator after thermostat has opened.

H **RADIATOR FAN SHROUD** - Permits a greater concentration of air to be drawn through radiator.

I **RADIATOR DRAIN VALVE** - Permits coolant drainage from radiator.

J **RADIATOR** - Directs coolant through a series of fins or baffles so air can remove excessive heat from coolant.

K **ENGINE OIL COOLER** - Removes excessive heat from engine oil.

L **RADIATOR OUTLET TUBE** - Directs coolant from radiator to engine oil cooler.

M **BYPASS TUBE** - Directs coolant back to engine oil cooler where it is then recirculated through engine until thermostat opens.

N **SURGE TANK-TO-ENGINE OIL COOLER HOSE** - Directs coolant to engine oil cooler when filling the system.

1-19. POWER SYSTEMS OPERATION (Contd)

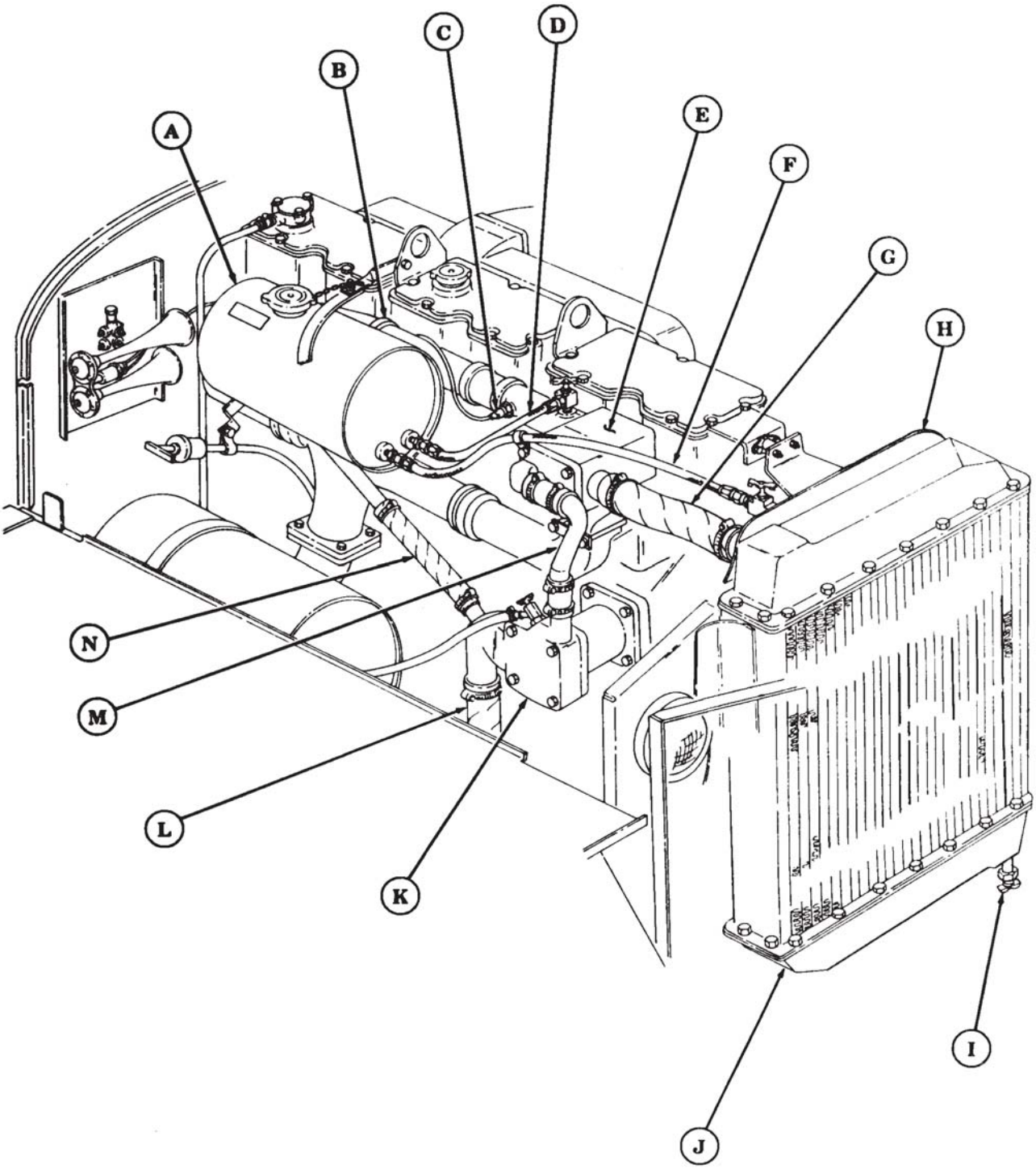

1-20. ELECTRICAL SYSTEMS OPERATION

Wires with circuit numbers are shown here for reference only and are NOT to be used for troubleshooting procedures.

The electrical systems include those components that either provide or are powered by electricity. Each of these components will be described as part of the following subsystems:

a. Battery System Operation (page 1-56).
b. Starting System Operation (page 1-57).
c. Generating System Operation (page 1-58).
d. Heating System Operation (page 1-58).
e. Gage and Warning System Operation (page 1-59).
f. Directional Signal System Operation (page 1-60).
g. Lighting System Operation (page 1-61).

a. Battery System Operation.

A SLAVE RECEPTACLE - Used when vehicle batteries are not sufficiently charged. Provides an external power source to assist in cranking engine.

B BATTERY SWITCH - Connects or disconnects the batteries from the vehicle electrical system.

C PROTECTIVE CONTROL BOX - Prevents starter motor from engaging when engine is running.

D BATTERIES – Four 6TN batteries provide 24-volt power to energize starter motor and electrical accessories.

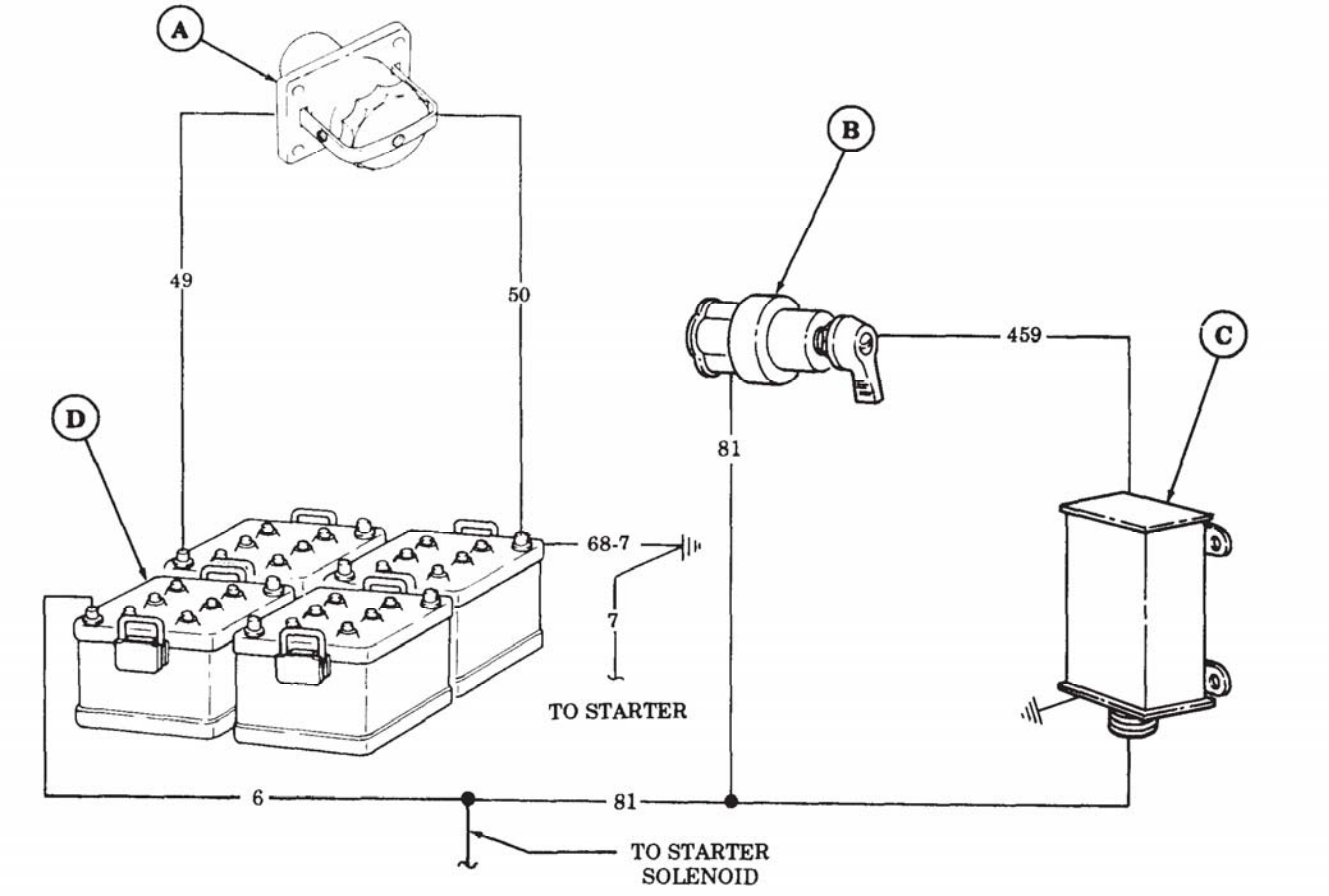

1-20. ELECTRICAL SYSTEMS OPERATION (Contd)

b. Starting System Operation.

A BATTERIES - Four 6TN batteries supply 24 volts to starting system.

B PROTECTIVE CONTROL BOX - Prevents starter motor from engaging when engine is running.

C OIL PRESSURE LOCKOUT SWITCH - Provides an electrical signal to protective control box, which prevents starter from engaging.

D FUEL SHUTOFF SOLENOID - Controls fuel flow into fuel pump.

E BATTERY SWITCH - Activates all electrical circuits.

F IGNITION SWITCH - When engaged, provides battery power to starter solenoid.

G STARTER MOTOR - Converts electrical energy to mechanical power as it engages the flywheel to crank engine.

H STARTER SOLENOID - Actuates starter motor gear to crank engine.

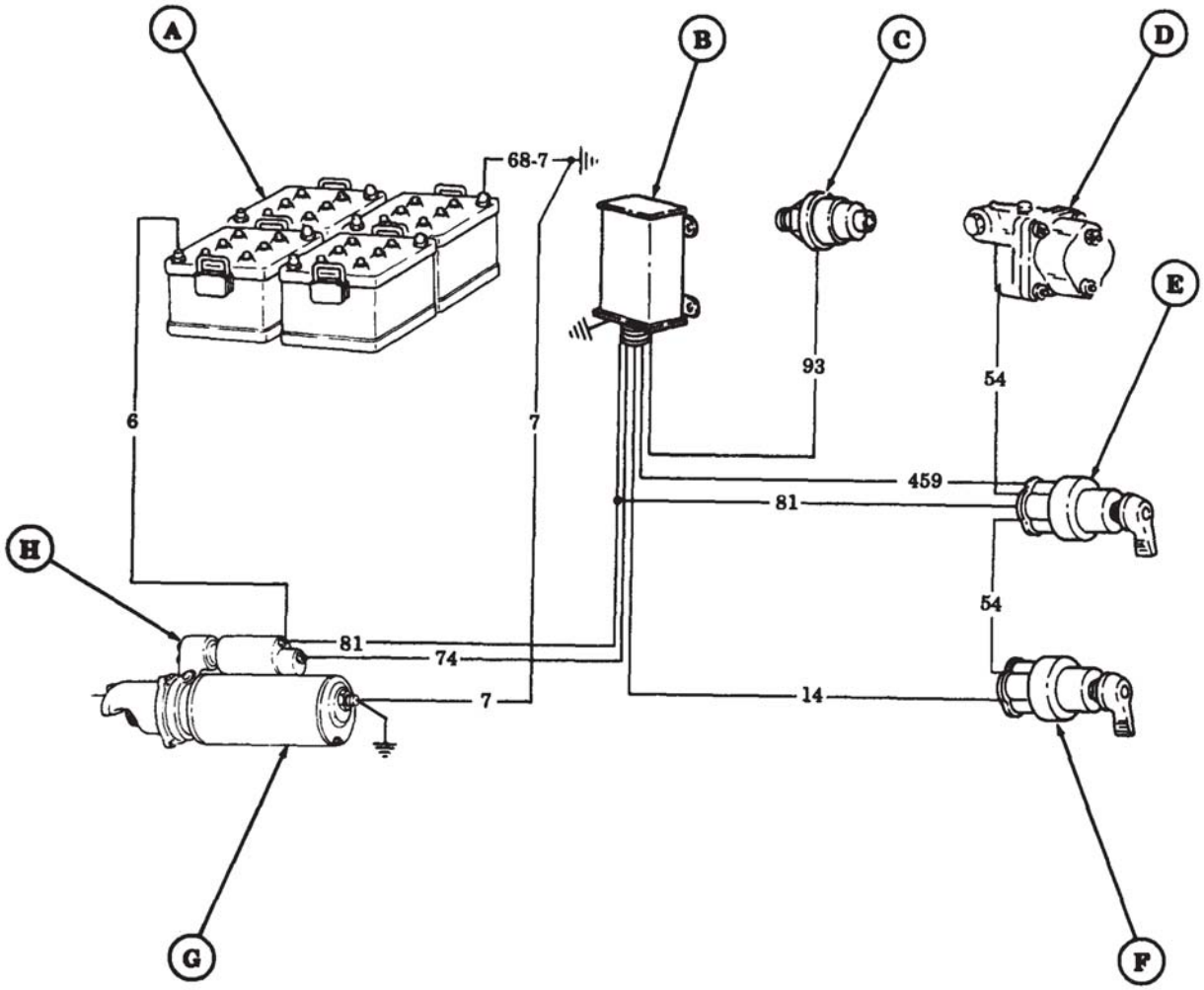

1-20. ELECTRICAL SYSTEMS OPERATION (Contd)

c. Generating System Operation.

ALTERNATOR – Supplies electrical power to operate all electrical accessories and keeps batteries charged when engine is operating.

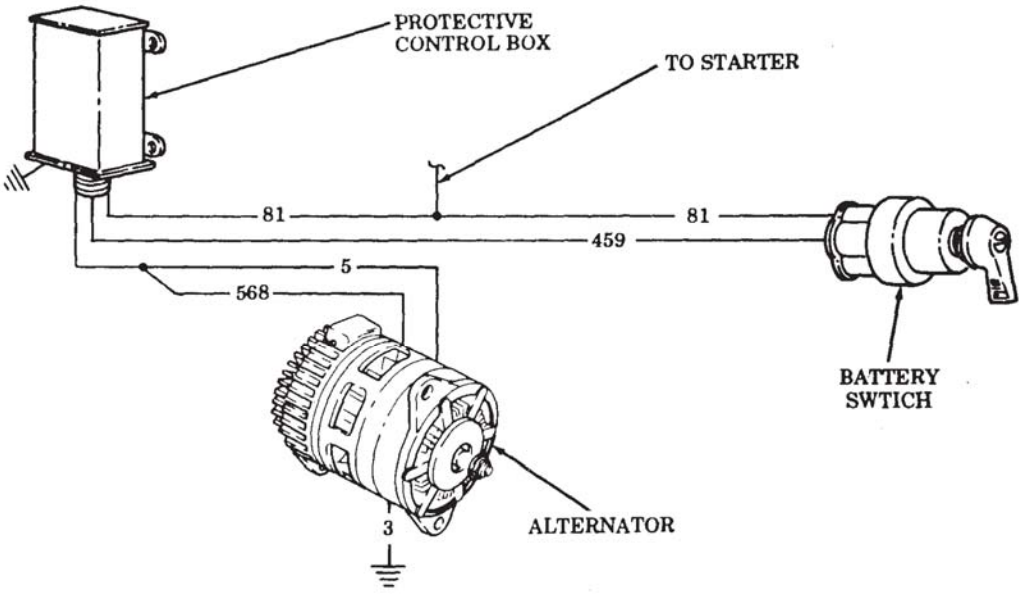

d. Heating System Operation.

A HOT WATER PERSONNEL HEATER – Warms interior of vehicle cabin cold climate conditions. Hot engine coolant circulating through heater warms air flowing through heater core. A fan then forces outside air through heater and into cab.

B PERSONNEL HEATER SWITCH – Allows heater fan to operate at two speeds.

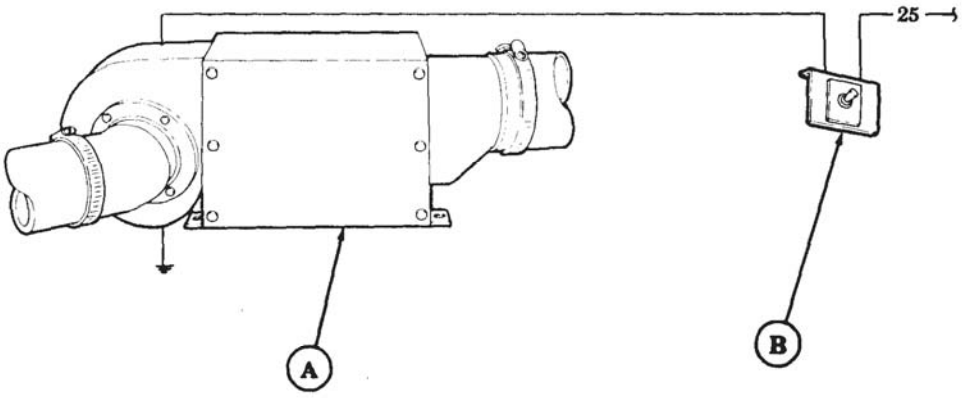

1-20. ELECTRICAL SYSTEMS OPERATION (Contd)

e. Gage and Warning System Operation.

A ENGINE TEMPERATURE GAGE - Indicates temperature of engine coolant circulating through engine. Receives electrical current from water temperature sending unit located on water manifold.

B WARNING BUZZER - Produces a loud sound to warn vehicle operator that the low air pressure switch has been activated.

C LOW AIR PRESSURE SWITCH - Activates warning buzzer to sound when pressure in compressed air system is not high enough to safely operate vehicle.

D BATTERY/ALTERNATOR GAGE - Indicates amount of voltage in electrical system provided by batteries and alternator.

E FUEL GAGE - Indicates amount of fuel in fuel tank(s). Receives electrical current from sending unit located in fuel tank(s).

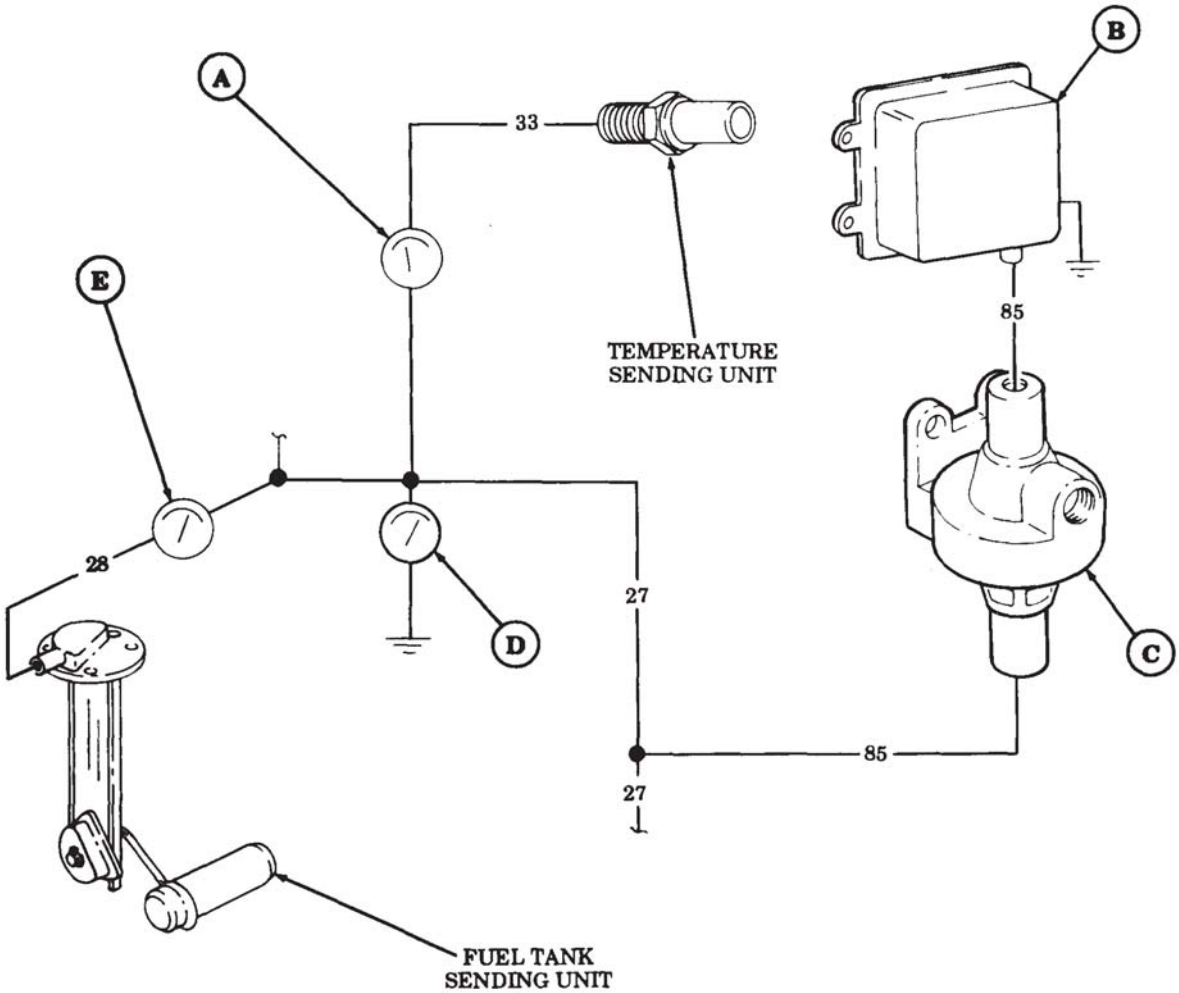

1-20. ELECTRICAL SYSTEMS OPERATION (Contd)

f. Directional Signal System Operation.

The directional signal system is identical on all models covered in this manual and consists of the following major components and circuitry:

A FRONT COMPOSITE LIGHT – Receives power from turn signal control through circuits 460 and 461 to indicate turning direction.

B LIGHT SWITCH – Provides battery power to the directional signal switch through circuits 460 and 461, and to the stoplight switch through circuit 75.

C STOPLIGHT SWITCH – Closing this switch allows power to flow from the light switch through circuit 75 to circuit 22 to the directional signal switch.

D REAR COMPOSITE LIGHT – Receives power from turn signal control through circuits 22-460 and 22-461 to indicate turning direction.

E DIRECTIONAL SIGNAL SWITCH – A four-position switch that directs power to the composite and signal lights through circuits 460, 461, 22-460, and 22-461 to indicate direction of turn.

F TURN SIGNAL FLASHER – Receives power through circuit 467A which causes the flasher to send intermittent current to the signal light through circuit 467B.

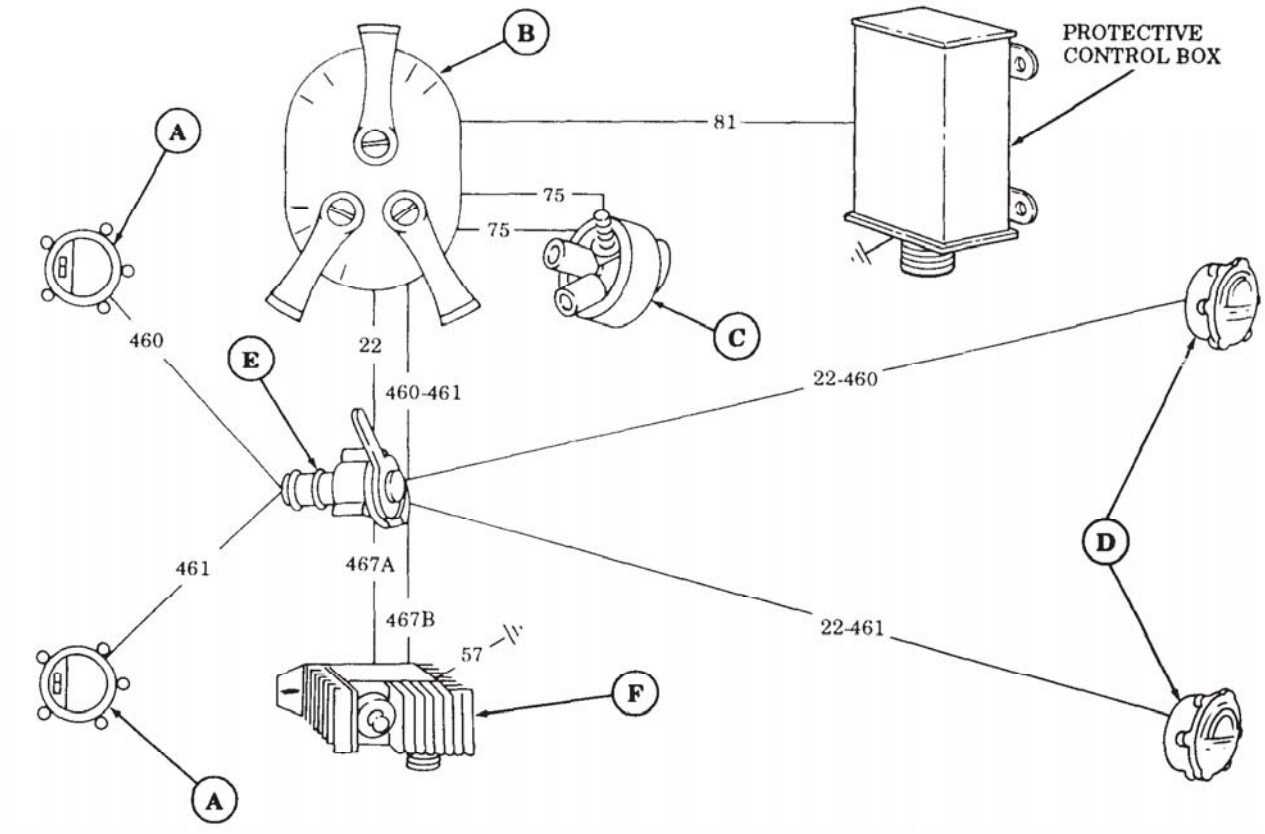

1-20. ELECTRICAL SYSTEMS OPERATION (Contd)

g. Lighting System Operation.

The lighting system is identical for all models covered in this manual and consists of the following major components and circuits:

A **SERVICE HEADLIGHT** – Receives power from light switch through circuits 17 and 18 for vehicle night operation.

B **FRONT COMPOSITE LIGHT** – Receives power from turn signal control through circuits 460 and 461 to indicate turning direction.

C **PANEL LIGHTS** - Receive power from light switch through circuit 40 to illuminate instrument panel.

D **REAR COMPOSITE LIGHT** - Receives power from light switch through circuits 21,23, and 24 to indicate turning direction.

E **LIGHT SWITCH** - Directs power to vehicle and accessory lights.

F **HIGH BEAM INDICATOR LIGHT** - Receives power from high beam switch through circuit 17 to indicate headlights being switched from low to high.

G **HIGH BEAM SWITCH** - Receives power from light switch through circuit 16 to switch headlights from low to high.

H **BLACKOUT HEADLIGHT** - Receives power from light switch through circuit 19 for vehicle blackout operations.

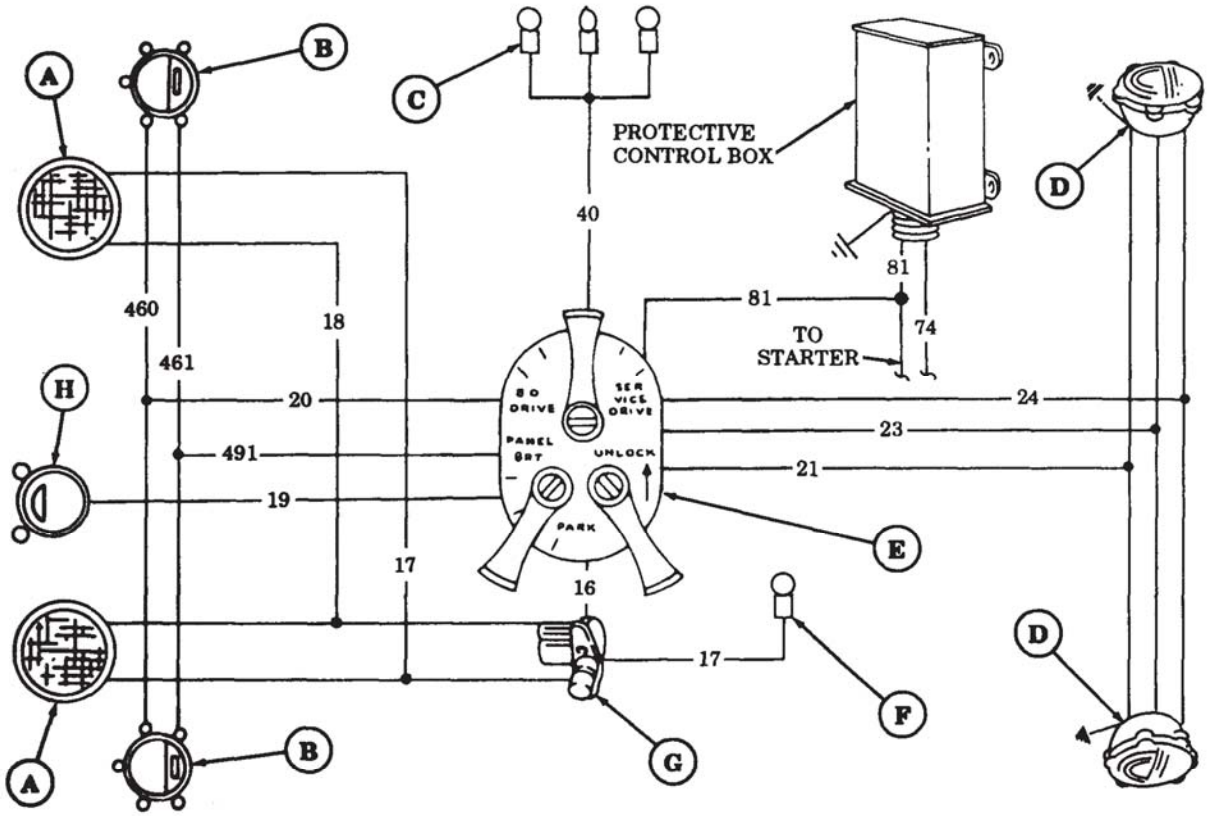

1-21. COMPRESSED AIR AND AIR-HYDRAULIC BRAKE SYSTEM OPERATION

The compressed air and air-hydraulic brake system takes compressed filtered air and supplies it to various components enabling the operator to slow down or stop the vehicle. Compressed air is also supplied to air-actuated accessories throughout the vehicle such as the air horn, windshield wipers, and auxiliary air supply valve. Components and accessories of the compressed air and air-hydraulic brake system are described as part of the following systems:

a. Compressed Air System Operation (page 1-62).
b. Air-Hydraulic Brake System Operation (page 1-63).

a. Compressed Air System Operation.

A AIR HORN - Receives air from the compressed air system and is electrically activated to sound off.

B GOVERNOR - Automatically opens and closes a valve in the air pressure compressor to ensure a sufficient supply of compressed air is available for the system.

C AIR PRESSURE GAGE - Indicates the amount of air pressure present in the compressed air system. Normal pressure is 90-120 psi (621-827 kPa).

D AIR RESERVOIRS - Store pressurized air for use in the compressed air system and traps water to protect air-actuated accessories from corrosion and freezing.

E AIR COMPRESSOR - Draws in filtered air, pressurizes it, and forces it into air reservoirs for storage.

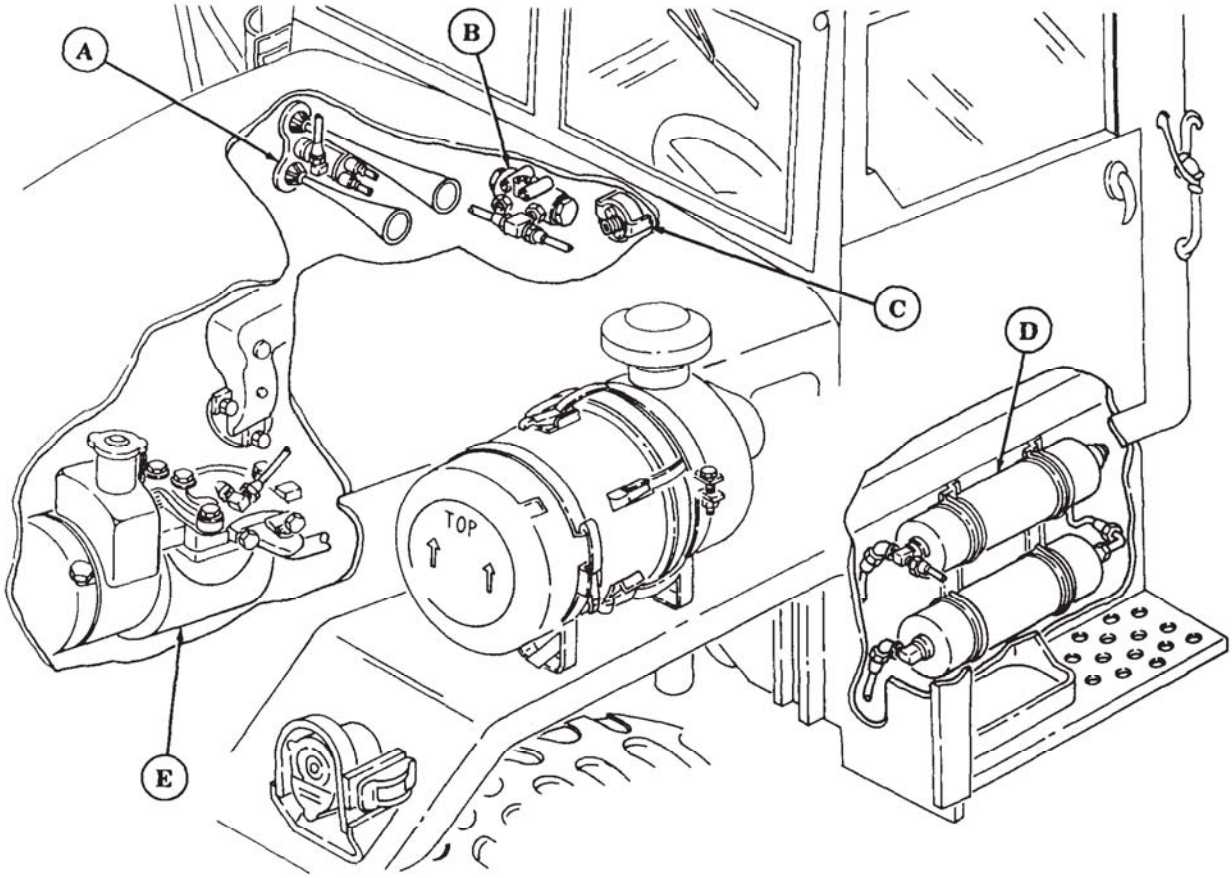

1-21. COMPRESSED AIR AND AIR-HYDRAULIC BRAKE SYSTEM OPERATION (Contd)

b. Air-Hydraulic Brake System Operation.

A BRAKE PEDAL - Operator control for slowing and stopping vehicle. Applies force through brake linkage to master cylinder to actuate vehicle brakes.

B BRAKE LINKAGE - Transmits brake pedal force to master cylinder.

C MASTER CYLINDER – Stores brake fluid and is the filling location for adding brake fluid. Converts force from brake linkage into hydraulic pressure.

D AIR-HYDRAULIC UNIT - Combines hydraulic pressure from master cylinder and air pressure from compressed air system to apply increased hydraulic pressure to the vehicle brakes.

E HYDRAULIC BRAKE LINES - Direct brake fluid under hydraulic pressure to all six wheel cylinders.

F WHEEL CYLINDER - Converts hydraulic pressure into mechanical force to press brakeshoes against surface of brakedrum.

G BRAKEDRUM - Encloses wheel cylinder and brakeshoes, and provides a surface for brakeshoes to press against.

H BRAKESHOES - Apply friction to brakedrum to slow or stop rotation of wheels.

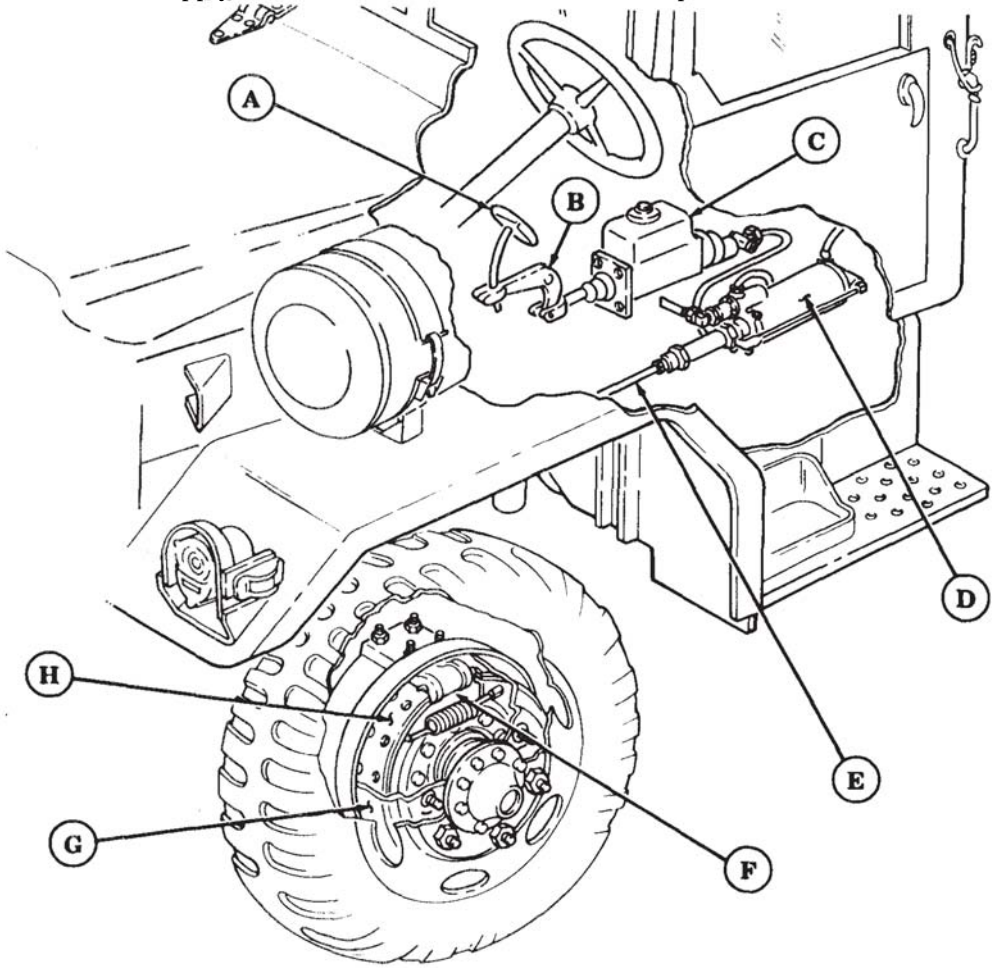

1-22. SPECIAL PURPOSE BODIES SYSTEMS OPERATION

Special purpose bodies systems include those controls, hydraulics, and other related components which will enable a vehicle to perform a specific task outside basic vehicle operation. Major parts will be described for each of the following systems:

a. Medium Wrecker Crane and Rear Winch Controls Operation (M816) (page 1-64.
b. Dump Body Hydraulic System Operation (M817) (page 1-66).
c. Auxiliary Trailer Power Systems Operation (M818) (page 1-68).
d. Troop Seats and Side Racks Operation (M813, M813A1, M814) (page 1-69).
e. Tractor Wrecker Crane Hydraulic System Operation (M819) (page 1-70).
f. Expansible Van Liftgate Hydraulic System Operation (M820A2) (page 1-72).

a. Medium Wrecker Crane and Rear Winch Controls Operation (MM816).

The M816 medium wrecker truck is used for wrecker and salvage operations. It is equipped with a hydraulically-operated crane that can extend to a length of 18 ft (5.49 m), elevates 45 degrees, swings 270 degrees, and is capable of lifting loads up to 20,000 lbs (9,072 kg). The wrecker crane and winch control system converts power from the engine into hydraulic and mechanical power. This allows the operator to perform crane and rear winch operations outside of the vehicle. Major components are:

A **REAR WINCH SHIFT LEVER** - Controls turning of rear winch drum.

B **CRANE DRIVE CONTROL LEVER** - Pulled back to engage power for crane operation.

C **THROTTLE CONTROL LEVER** - Used to control engine speed during winching operations.

D **ENGINE CLUTCH CONTROL LEVER** - Used to engage and disengage engine clutch for rear winch or crane operations.

E **CABLE TENSIONER CONTROL VALVE LEVER** - Used to apply tension to slack cable when rewinding.

F **REAR WINCH CONTROL ROD** - Connects rear winch shift lever with power divider linkage.

G **AIR CHAMBER** - Provides mechanical power to rear winch cable tensioner.

H **CRANE DRIVE CONTROL ROD** - Connects power divider to hydraulic pump to power crane.

I **THROTTLE CONTROL CABLE** - Connects throttle control lever (C) with engine fuel pump governor for controlling engine speed during winching.

1-22. SPECIAL PURPOSE BODIES SYSTEMS OPERATION (Contd)

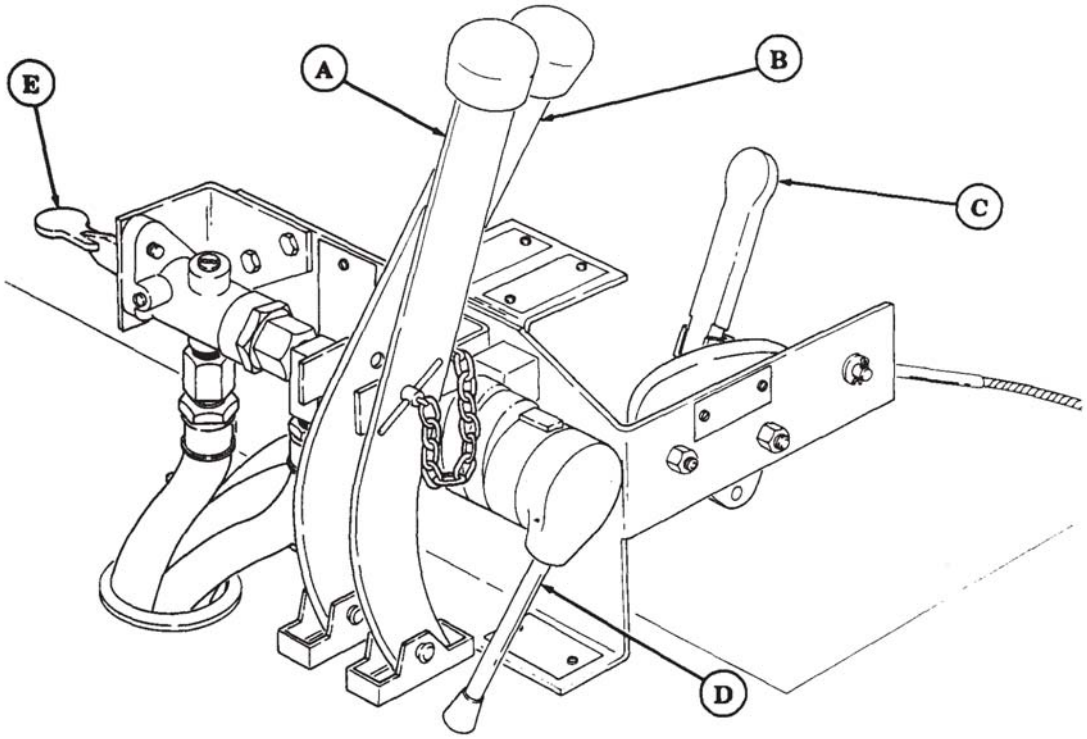

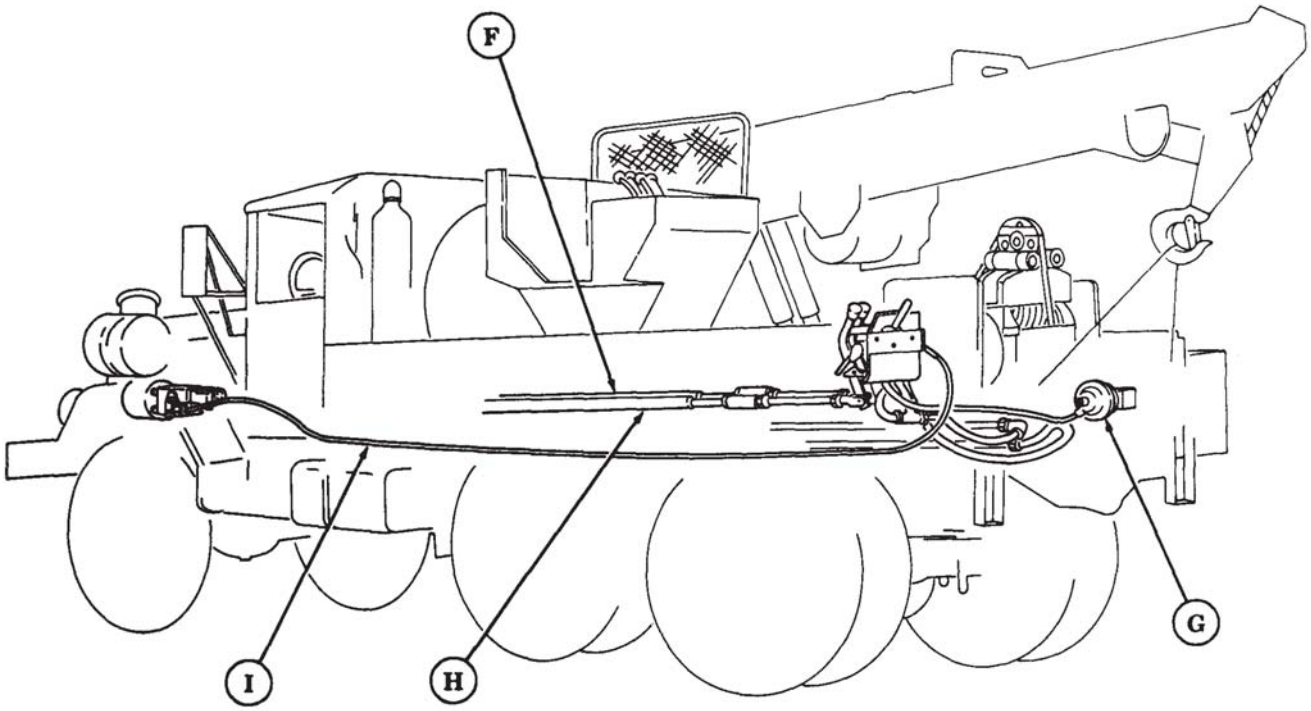

1-22 SPECIAL PURPOSE BODIES SYSTEMS OPERATION (Contd)

b. Dump Body Hydraulic System Operation (M817).

The M817 dump body is used to transport and deposit cargo. Dump body hydraulic system converts mechanical power from transmission PTO into fluid power through use of hydraulic pump. Pump draws oil from oil reservoir and then forces it into control valve. This hydraulic pressure raises and lowers dump body. Major components of dump body hydraulic system are:

A **TRANSMISSION POWER TAKEOFF PROPELLER SHAFT** - Transmits power from transmission PTO to hydraulic pump.

B **TRANSMISSION POWER TAKEOFF** - Attached to side of transmission to provide power for hydraulic pump.

C **DUMP BODY CONTROL LINK** - Connects control valve to transmission PTO.

D **HYDRAULIC PUMP** - Driven by transmission PTO propeller shaft, it draws oil from oil reservoir, then pressurizes and directs it to control valve.

E **CONTROL BOX** - Transmits motion of control rod to actuate control valve.

F **CONTROL VALVE** - Four-port valve accepts pressurized oil from hydraulic pump and directs oil to cylinder assembly.

G **CYLINDER ASSEMBLY** - Consists of two hydraulic cylinders which raise and lower dump body using hydraulic oil pressure.

H **HYDRAULIC SAFETY LATCH** - Hydraulically-operated in conjunction with dump body control lever. Safety latch locks dump body in the lowered position and releases it when control lever is raised to a vertical position.

I **HYDRAULIC RESERVOIR** - Storage tank for hydraulic oil.

J **DUMP BODY CONTROL ROD** - Connects control lever to control box.

K **DUMP BODY CONTROL LEVER** - Permits operation of dump body in four positions. It is pushed forward to lowest position to raise dump body, raised to second lowest position to lock dump body and raised to third position to lower dump body. When control lever is fully raised to vertical position, dump body is locked in position by use of a hydraulic safety latch.

L **DUMP BODY CONTROL LEVER LOCK** - Prevents operation of dump body control lever.

1-22. SPECIAL PURPOSE BODIES SYSTEMS OPERATION (Contd)

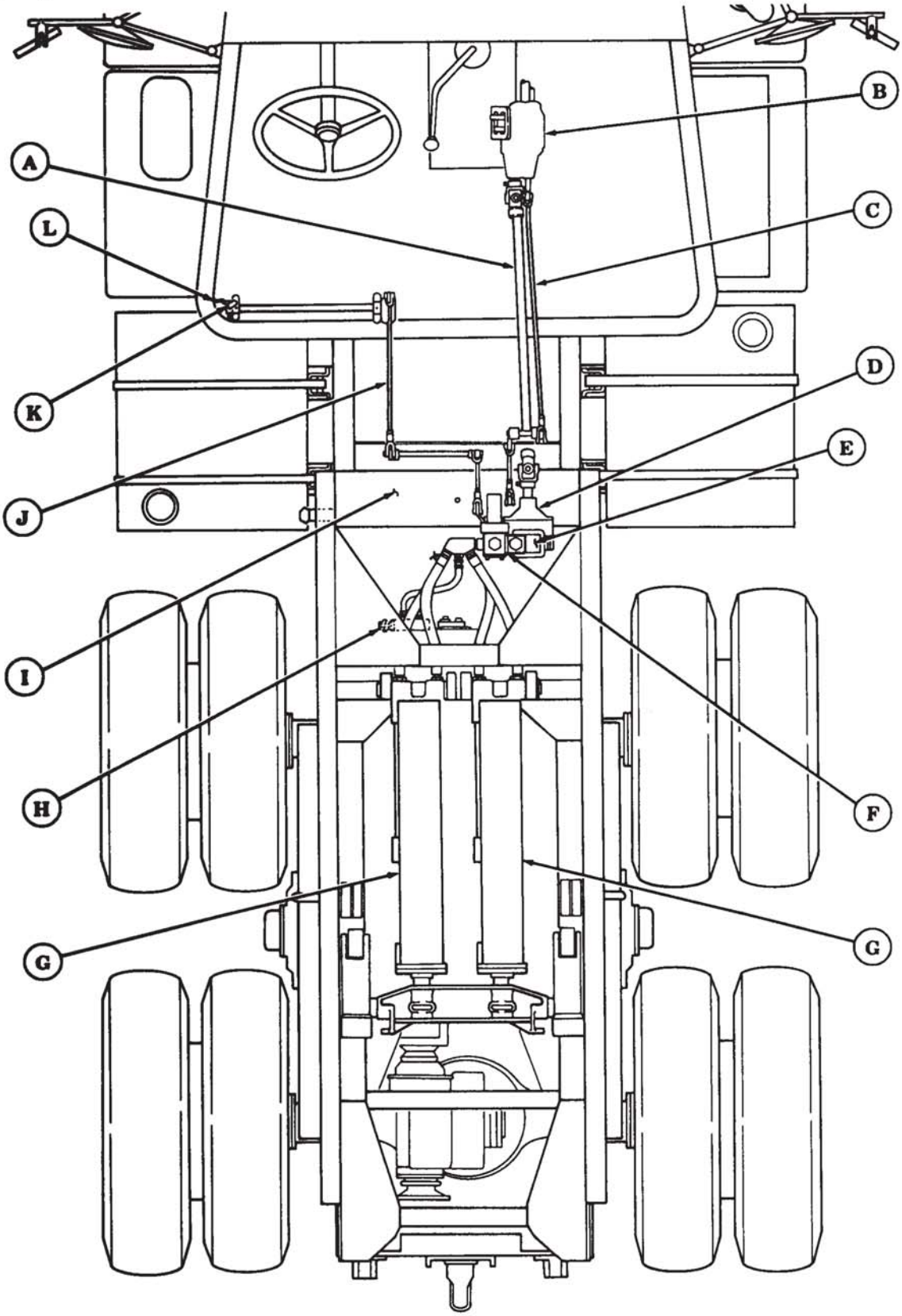

1-22. SPECIAL PURPOSE BODIES SYSTEMS OPERATION (Contd)

c. Auxiliary Trailer Power Systems Operation (M818).

The trailer receptacle and air coupling are used on the M818 tractor body to power lights and brakes of a towed semitrailer. Major components are:

A ELECTRICAL CABLE - Connected to electrical receptacle of a semitrailer to power its electrical system.

B SERVICE AIRBRAKE HOSE LINE - Connects to service airbrake coupling on semitrailer to provide air to service airbrake system.

C EMERGENCY AIRBRAKE HOSE LINE - Connected to emergency airbrake coupling on semitrailer. The trailer emergency brake system activates when primary air system fails.

D AIRBRAKE HOSE COUPLING VALVES - When in ON position. activates trailer brakes to truck brakes. In OFF position, deactivates trailer brakes-from truck brakes.

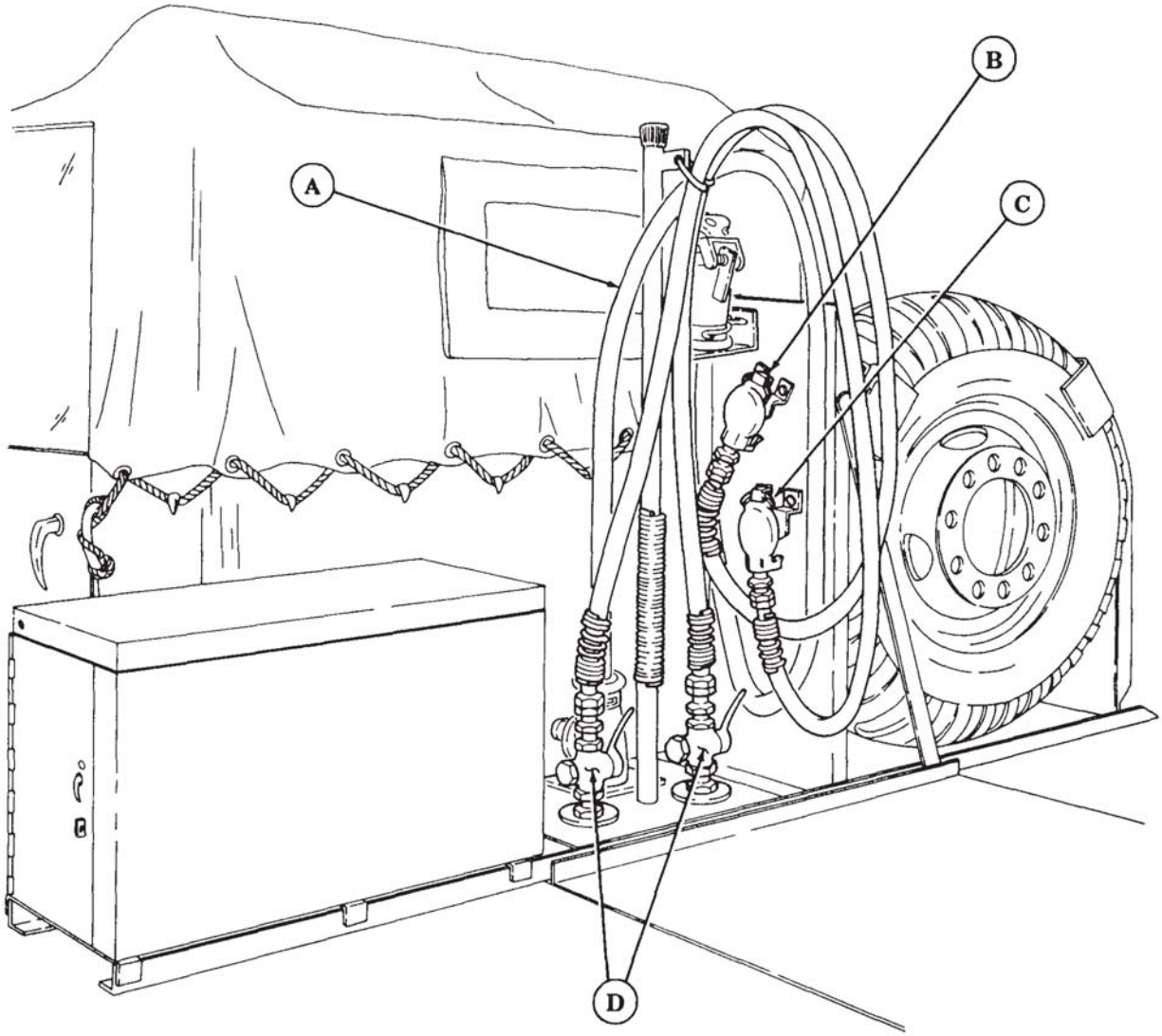

1-22. SPECIAL PURPOSE BODIES SYSTEMS OPERATION (Contd)

d. Troop seats and Side Rack Operation (M813, M813A1, M814).

Troop seats and side racks are mounted on M813, M813A1, and M814 vehicles when transporting troops or supporting cargo that would extend above the vehicle body. Side racks also provide pockets for mounting the body bow and tarpaulin kit. Major parts are:

A BODY BOWS - Installed in side racks; used as frame support for tarpaulin kit.

B SIDE RACKS - Installed in cargo body side panels for use when transporting large cargo.

C TROOP SEATS - Attached to side racks, troop seats can be raised or lowered when vehicle is used as either a cargo or personnel carrier truck.

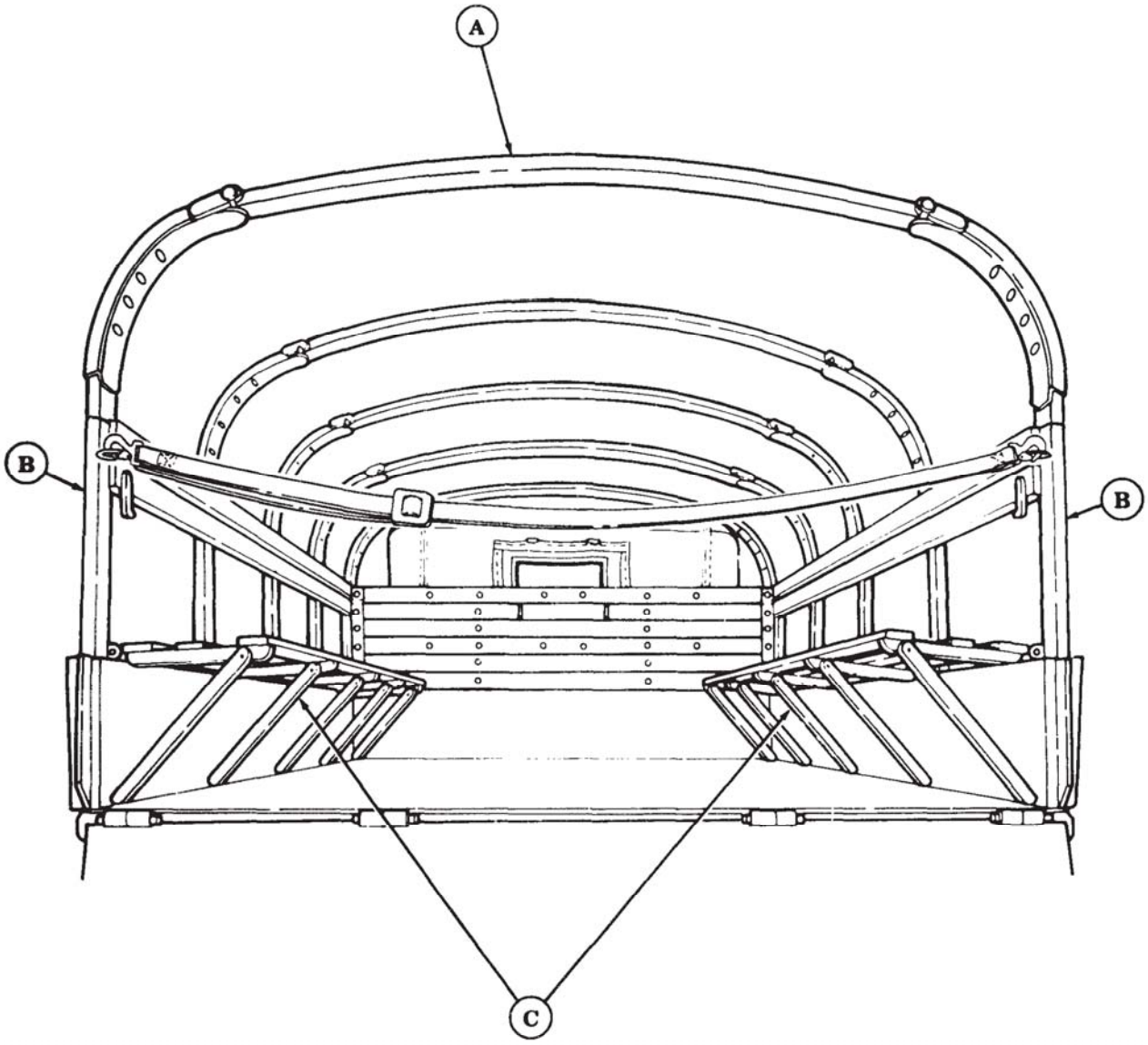

1-22. SPECIAL PURPOSE BODIES SYSTEMS OPERATION (Contd)

e. Tractor Wrecker Crane Hydraulic System Operation (M819).

The M819 tractor wrecker has a hydraulically-powered, engine-driven crane that is used for lifting materials and freeing mired vehicles. The crane can extend from 11.5-26 ft (3.51-7.93 m) and is capable of lifting up to 20,000 lbs (9,072 kg). Crane components are:

A **CROWD CYLINDER** - Hydraulically-driven piston that extends outward when crowd control lever is pushed forward to EXTEND position, retracts when crowd control lever is pulled back to RETRACT position. This cylinder is contained in the inner boom assembly.

B **BOOM LIFT CYLINDER** - Hydraulically-driven, the lift cylinder raises the boom when the boom control lever is pulled back to UP position and lowers boom when control lever is pushed forward to DOWN position.

C **BOOM CONTROL VALVE BANK** - Located in gondola, the control valve directs hydraulic oil from hydraulic pump to boom lift and crowd cylinders, and swing and hoist motor to operate crane.

1. Boom control lever
2. Hoist control lever
3. Crowd control lever
4. Swing control lever

D **HYDRAULIC OIL RESERVOIR** - Storage tank for hydraulic oil.

E **SWING MOTOR** - Located under the crane shipper support, attached to the pivot post. The hydraulically-powered motor allows the crane to rotate left or right up to 360° in rotation.

1-22. SPECIAL PURPOSE BODIES SYSTEMS OPERATION (Contd)

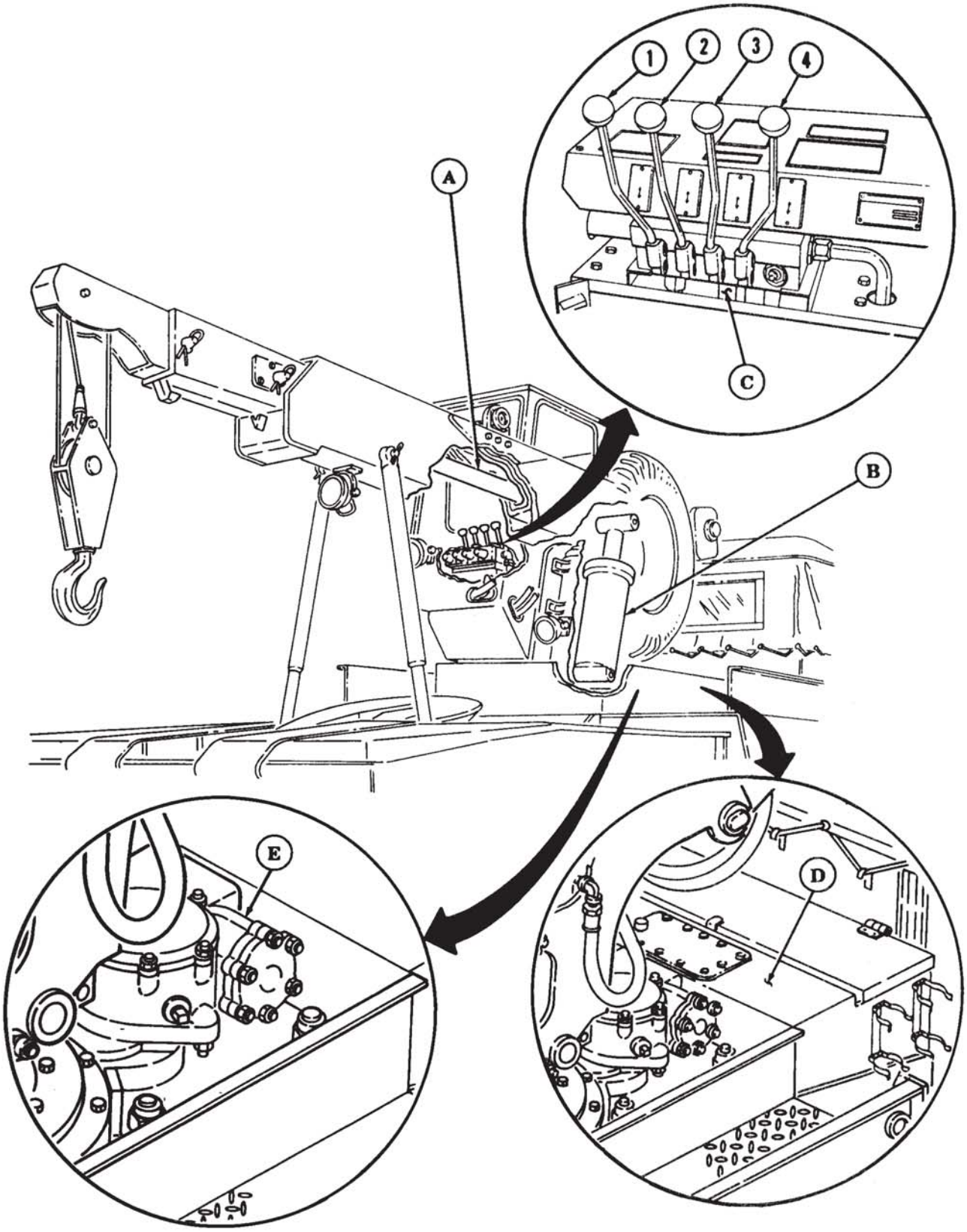

1-22. SPECIAL PURPOSE BODIES SYSTEMS OPERATION (Contd)

f. Expansible Van Liftgate Hydraulic System Operation (M820A2).

The M820A2 vehicle is used for maintenance, shop, electrical, supply, and base station operations. The M820A2 has a hydraulically-operated liftgate for loading and unloading equipment. Driven by an engine-powered hydraulic pump, the liftgate can lift up to 3,000 lbs (1,362 kg). Components and accessories of the hydraulic liftgate are described as part of the following systems:

1. Hydraulic System Operation (page 1-72).
2. Mechanical System Operation (page 1-74).

1. Hydraulic System Operation.

A OPENING/CLOSING CYLINDER - Receives hydraulic pressure from control valve and extends to open or retracts to close liftgate.

B LIFTGATE CYLINDER - Piston-type cylinder receives hydraulic pressure from control valve and extends to lower or retracts to raise liftgate.

C HYDRAULIC PUMP - Driven by the PTO shaft, it draws hydraulic oil from the hydraulic oil reservoir, then pressurizes and directs it to the control valve.

D HYDRAULIC OIL RESERVOIR - Stores hydraulic oil for liftgate system.

E HYDRAULIC MOTOR - Provides hydraulic pressure to the liftgate system when the vehicle is not running or hydraulic pump fails to operate.

F CONTROL VALVE - Five-port valve directs pressurized hydraulic oil from hydraulic pump to the opening/closing and liftgate cylinders. The control valve also directs return oil from the cylinders back to the hydraulic oil reservoir.

1-22. SPECIAL PURPOSE BODIES SYSTEMS OPERATION (Contd)

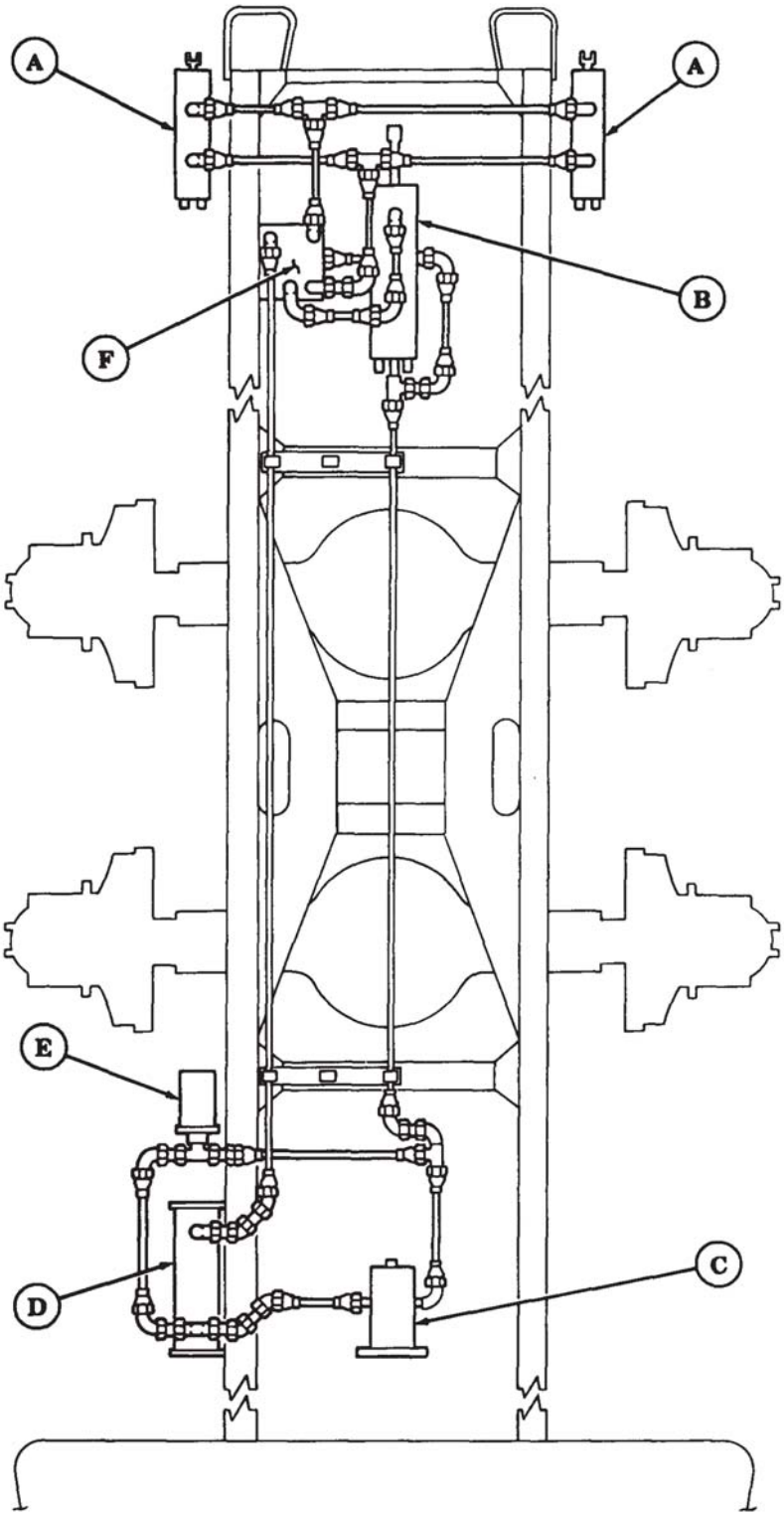

1-22. SPECIAL PURPOSE BODIES SYSTEMS OPERATION (Contd)

2. Mechanical System Operation.

A LIFTGATE PLATFORM - Manually-operated platform can be opened or closed and raised or lowered for loading or unloading equipment.

B LOWERING/ELEVATING CONTROL - Raises and lowers platform when pushed forward or rearward.

C OPENING/CLOSING CONTROL - Controls operation of control valve which opens platform when lever is pulled rearward and closes platform when pushed forward.

D HYDRAULIC PUMP - Driven by power takeoff (PTO) shaft, drains hydraulic oil from reservoir, then pressurizes and directs it to control valve.

E POWER TAKEOFF (PTO) SHAFT - Transmits mechanical power from transmission PTO to hydraulic pump.

F TRANSMISSION POWER TAKEOFF (PTO) - Receives power from transmission to provide mechanical driving power for the hydraulic pump.

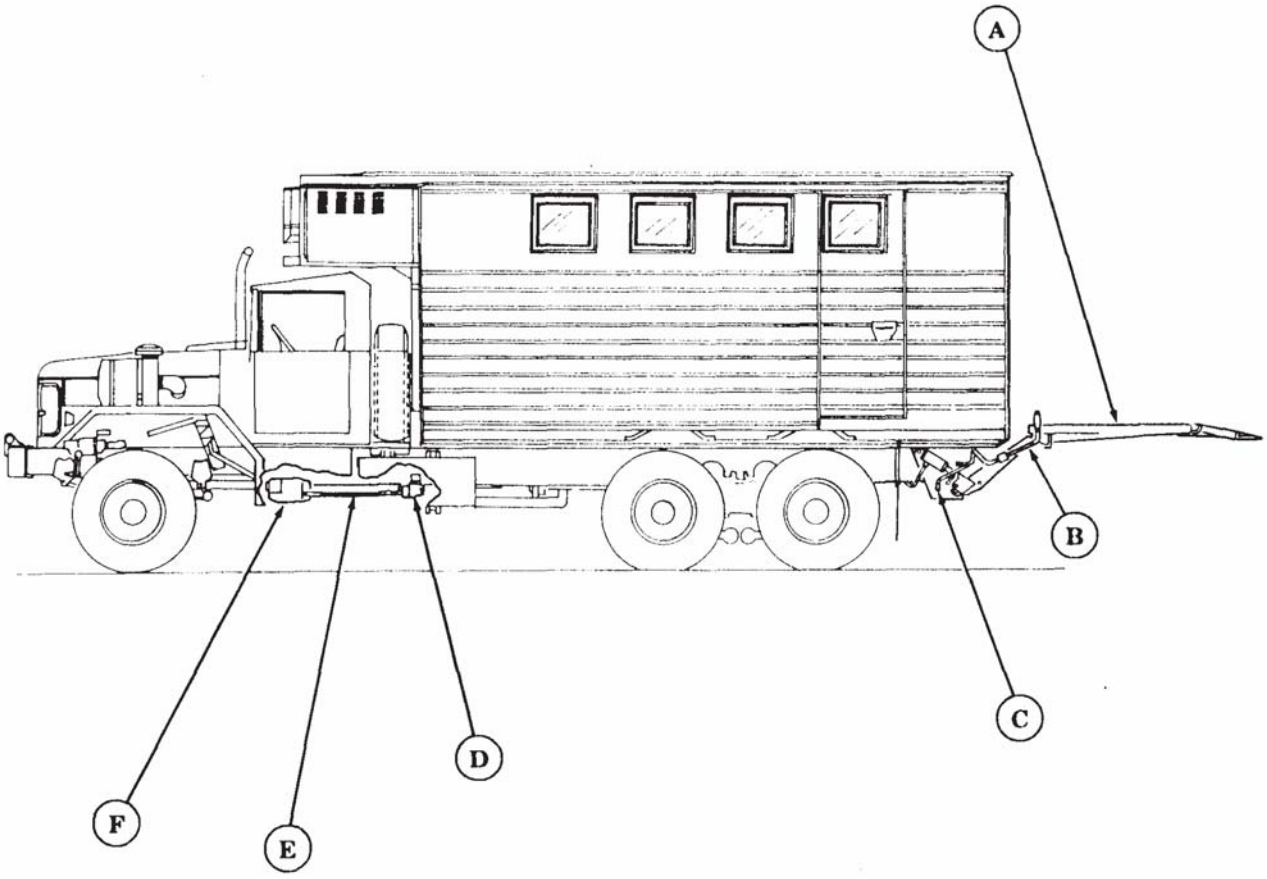

CHAPTER 2
SERVICE AND TROUBLESHOOTING INSTRUCTIONS

Section I. Repair Parts, Special Tools, TMDE, and Support Equipment (page 2-1)
Section II. Service Upon Receipt (page 2-1)
Section III. Preventive Maintenance Checks and Services (PMCS) (page 2-2)
Section IV. Mechanical Systems Troubleshooting (page 2-66)
Section V. Compressed Air and Air-Hydraulic Brake System Troubleshooting (page 2-88)
Section VI. Electrical Systems Troubleshooting (page 2-96)
Section VII. STE/ICE Troubleshooting (page 2-186)

Section I. REPAIR PARTS, SPECIAL TOOLS, TMDE, AND SUPPORT EQUIPMENT

2-1. COMMON TOOLS AND EQUIPMENT

For authorized common tools and equipment, refer to the Modified Table of Organization and Equipment (MTOE) applicable to your unit.

2-2. SPECIAL TOOLS, TMDE, AND SUPPORT EQUIPMENT

Special Tools, Special Test, Measurement, and Diagnostic Equipment (TMDE), and Support Equipment used to maintain the vehicles covered in this manual can be found in TM 9-2320-260-20P.

2-3. REPAIR PARTS

Repair parts covering unit maintenance are listed and illustrated in the Repair Parts and Special Tools List (TM 9-2320-260-20P).

Section II. SERVICE UPON RECEIPT

2-4. GENERAL

a. Upon receipt of a new, used, or reconditioned vehicle, you must determine if the vehicle has been properly prepared for service. The following steps should be performed:

(1) Inspect all assemblies, subassemblies, and accessories to be sure they are in proper working order.

(2) Secure, clean, lubricate, or adjust as needed.

(3) Check all Basic Issue Items (TM 9-2320-260-10) to be sure every item is present, in good condition, and properly mounted or stowed.

(4) Follow general procedures for all service and inspections given in TM 9-2320-260-10.

b. The operator will assist when performing service upon receipt inspections.

c. Refer to TM 9-2320-260-10 when testing equipment for proper operation.

2-5. GENERAL INSPECTION AND SERVICING INSTRUCTIONS

The following steps should be taken while performing general inspections and services:

(1) Use TM 9-2320-260-10 and LO 9-2320-260-12, as well as other sections of this manual, when servicing and inspecting equipment.

2-5. GENERAL INSPECTION AND SERVICING INSTRUCTIONS (Contd)

WARNING

Drycleaning solvent is flammable and will not be used near open flame. Use only in well-ventilated places. Failure to do so may result in injury to personnel.

(2) Clean all exterior surfaces coated with rust-preventive compounds with drycleaning solvent,

(3) Read "Processing and Reprocessing Record of Shipping, Storage, and Issue of Vehicles and Spare Engines," tag (DD Form 1397) and follow all precautions listed. This tag should be attached to steering wheel, shift column, or battery switch.

NOTE

If vehicle has been driven to using organization, all of the above work should have been completed.

2-6. SPECIFIC INSPECTION AND SERVICING INSTRUCTIONS

The following steps should be taken while performing specific inspections and services:

(1) Perform the semiannual (6 months or 6,000 miles [9,654 kilometers]) preventive maintenance checks and services listed in section III of this chapter.

(2) Lubricate the vehicle according to LO 9-2320-260-12. Do not lubricate gearcases or engine unless processing tag states that the oil is unsuitable for 500 miles (805 kilometers) of operation. If oil is suitable, just check level.

(3) Schedule semiannual service on DA Form 314 (Preventive Maintenance Schedule and Record Card).

(4) If vehicle is delivered with a dry charged battery, notify your supervisor to activate.

(5) Check vehicle coolant level and determine if solution is proper for climate. (Refer to TB 750-651 for preparation of antifreeze solutions.)

Section III. PREVENTIVE MAINTENANCE CHECKS AND SERVICES (PMCS)

2-7. GENERAL

The best way to maintain vehicles covered by this manual is to inspect them on a regular basis so minor faults can be discovered and corrected before they result in serious damage or failure of vehicle and equipment or injury to personnel. This section contains systematic instructions for inspection, adjustment, and correction of vehicle components to avoid costly repairs or major breakdowns. This is referred to as Preventive Maintenance Checks and Services (PMCS). Located after the PMCS is a Mandatory Replacement Parts List which contains items to be replaced during PMCS procedures. Those items found in the parts list are referenced from the PMCS table 2-1 using numbers in brackets [ ].

2-8. INTERVALS

NOTE

Designated intervals are performed under usual operating conditions. PMCS intervals must be performed more frequently when operating under unusual conditions.

a. Unit maintenance, assisted by operatorlcrew will perform the checks and services contained in table 2-1 at the following intervals:

(1) Semiannual. Every 6 months or 6,000 miles (9,654 kilometers), whichever comes first.

(2) Annual. Every 12 months or 12,000 miles (19,308 kilometers), whichever comes first.

(3) Biennial. Every 24 months or 24,000 miles (38,616 kilometers), whichever comes first.

b. Perform all semiannual inspections in addition to annual inspections at the time of the annual inspection. Perform all annual and semiannual inspections in addition to biennial inspections at the time of the biennial inspection.

2-9. REPORTING REPAIRS

All uncorrected defects will be recorded on Equipment Inspection and Maintenance Worksheet, DA Form 2404, in accordance with DA Pam 738-750.

2-10. GENERAL SERVICE AND INSPECTION PROCEDURES

a. While performing specific PMCS procedures, make sure items are correctly assembled, secure, serviceable, not worn, not leaking, and adequately lubricated as defined below:

(1) An item is CORRECTLY ASSEMBLED when it is in proper position and all parts are present.

(2) When wires, nuts, washers, hoses, or attaching hardware cannot be moved by hand, wrench, or prybar, they are secure.

(3) An item is UNSERVICEABLE if it is worn beyond established wear limits, or is likely to fail before the next scheduled inspection.

(4) An item is WORN if there is play between joining parts, or warning and caution plates are not readable.

(5) LEAKS. TM 9-2320-260-10 contains definitions of class I, II, and III leaks and their effect on vehicle operation.

(6) If an item meets the requirements specified by lubrication order, LO 9-2320-260-12, then it is ADEQUATELY LUBRICATED.

b. Where the instruction "tighten" appears in a procedure, you must tighten with a wrench to the given torque value even when the item appears to be secure.

WARNING

Drycleaning solvent is flammable and will not be used near open flame. Use only in well-ventilated places. Failure to do so may result in injury to personnel.

c. Where the instruction "clean" appears in a procedure, you must use drycleaning solvent, specification P-D 680, to clean grease or oil from metal parts. After the item is cleaned, rinsed, and dried, apply a light grade of oil to unprotected surfaces to prevent rusting. To clean rubber and plastic materials, use soap and water.

2-11. SPECIFIC PMCS PROCEDURES

a. The preventive maintenance checks and services for which you are responsible are provided in table 2-1. The checks and services listed are arranged in logical order requiring minimal time and effort on your part.

b. The following columns read across on the PMCS schedule:

(1) Item Number. Provides logical order for PMCS performance and is used as a source number for DA Form 2404, on which your PMCS results will be recorded.

(2) Interval. Shows category opposite each item number to indicate when that check is to be performed. The category will be repeated when consecutive item numbers are to be inspected during the same interval. Interval columns include:

(a) Semi-annual. Every 6 months or 6,000 miles (9,654 kilometers), whichever comes first.

(b) Annual. Every 12 months or 12,000 miles (19,308 kilometers), whichever comes first.

(c) Biennial. Every 24 months or 24,000 miles (38,616 kilometers), whichever comes first.

(3) Item To Check/Service. Lists the system, common name, or location of the item to be inspected.

(4) Procedure. Provides instructions for servicing, inspection, replacement, or adjustment, and in some cases, having an item repaired at a higher level. If a defect is found, repair, fill, replace, or adjust as needed.

(5) Not Fully Mission Capable If. Not mission capable if: After inspection and replacement, or adjustment, this column indicates symptoms that will occur if vehicle is not operating properly.

Table 2-1. Unit Level Preventive Maintenance Checks and Services.

ITEM NO.	INTERVAL	ITEM TO CHECK/ SERVICE	PROCEDURE	NOT FULLY MISSION CAPABLE IF:
			PRIOR TO ROAD TEST Perform all Before (B) and Weekly (W) operation checks listed in TM 9-2320-260-10 Preventive Maintenance Checks and Services.	
1	Semi-annual	Starter	Start engine (TM 9-2320-260-10). While starting engine, listen for unusual noises and difficult cranking.	Starter is inoperative or makes excessive grinding noise.
2	Semi-annual	Accelerator pedal and engine	**a.** Observe response to accelerator pedal (2). Listen for unusual noises. observe for hesitation, varying idle speed, and sticking or binding of accelerator pedal (2).	Accelerator pedal is sticking or binding.
			b. Be alert for excessive vibration, fuel odor, oil, coolant or exhaust dripping, and any indication of system malfunction.	Engine knocks, rattles, or smokes excessively.
3	Semi-annual	Throttle control	**a.** Check throttle control (1) travel and free movement.	Throttle control is binding or sticking.
			b. Pull throttle control (1) all the way out; ensure it does not bind or stick in any position.	
			c. Ensure accelerator pedal (2) is down against stop screw (3).	
			d. Release throttle control (1); ensure it does not bind or stick in any position.	Throttle control is binding or sticking.
4	Semi-annual	Emergency stop control	Pull emergency stop control (4) all the way out. When engine has stopped, check that emergency stop control (4) does not bind or stick in any position.	Emergency stop control is binding or sticking.

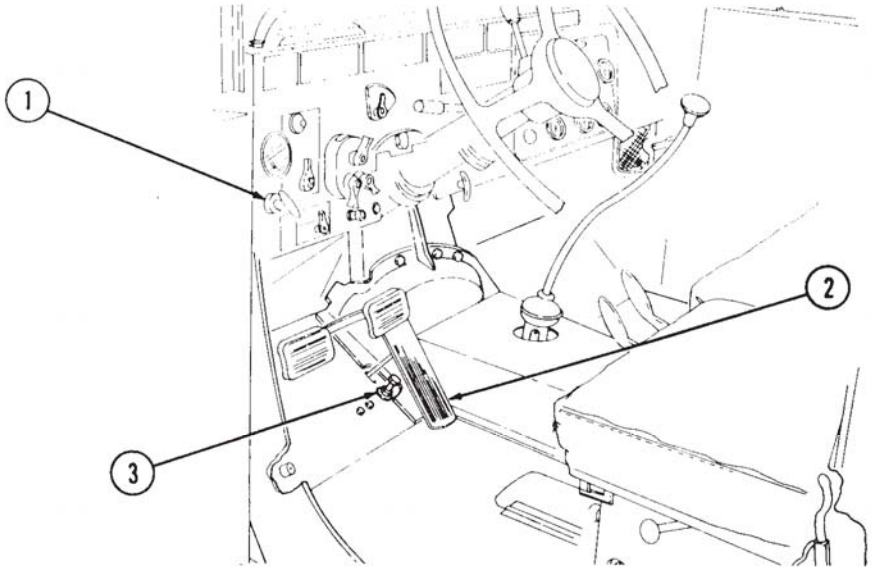

Table 2-1. Unit Level Preventive Maintenance Checks and Services (Contd).

ITEM NO.	INTERVAL	ITEM TO CHECK/ SERVICE	PROCEDURE	NOT FULLY MISSION CAPABLE IF:

LUBRICANTS	EXPECTED TEMPERATURES		
	ABOVE 15°F (ABOVE -9°C)	+40°F TO -15°F (+4°C TO -26°C)	+40°F TO -65°F (+4°C TO -54°C)
BFS - Brake fluid, silicone, automotive, all weather, operational and preservative (MIL-B-46176)	All Temperatures		

ITEM NO.	INTERVAL	ITEM TO CHECK/ SERVICE	PROCEDURE	NOT FULLY MISSION CAPABLE IF:
			ROAD TEST Perform all During (D) operation checks listed in TM 9-2320-260-10 PMCS in addition to those that follow. Drive the vehicle at least 5 mi (8 km) over varied terrain, both on and off road. This will provide ample time to check reported malfunctions and to locate unreported malfunctions.	
5	Semi-annual	Clutch	Check clutch pedal (5) for 2- 2-1/2 in. (5-6 cm) free travel. Adjust clutch pedal (5), if required (para. 3-12).	Clutch pedal is inoperative, slipping, or chatter is evident.
6	Semi-annual	Brakes	a. Check brake pedal (6) to ensure it stops 2 in. (5 cm) above floor. If brake pedal (6) stops less than 2 in. (5 cm) above floor, check service brake adjustment (para. 8-9). b. Check brake pedal (6) for l/4-l/2 in. (0.64-1.27 cm) free travel. Adjust brake pedal (6) if required (para. 8-17). **CAUTION** Use only silicone brake fluid (MIL-B-46176). c. Check master cylinder level weekly. **NOTE** Number in bracket refers to items found in Mandatory Replacement Parts List (page 2-65). 1. Remove screw-assembled lockwasher (7) [8] from access door (8) and remove screw cap (9) from master cylinder (10). Discard screw-assembled lockwasher (7) [8]. 2. Fill to 1/2 in. (12.7 mm) from top of master cylinder (10) with BFS lubricant. 3. Install screw cap (9) on master cylinder (10). Close access door (8) and lock with new screw-assembled lockwasher (7) [8].	

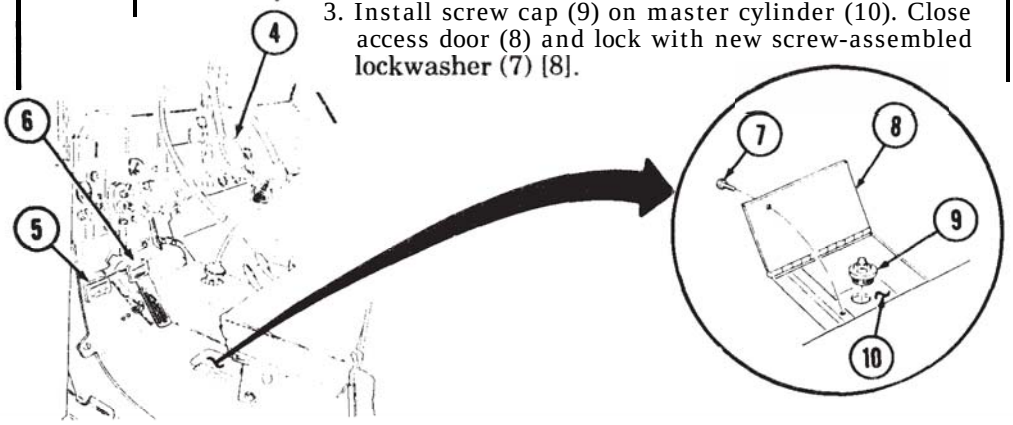

Table 2-1. Unit Level Preventive Maintenance Checks and Services (Contd).

ITEM NO.	INTERVAL	ITEM TO CHECK/ SERVICE	PROCEDURE	NOT FULLY MISSION CAPABLE IF:
7	Semi-annual	Steering system	**a.** Check steering wheel and ensure it does not exceed more than 1-in. (2.5 cm) free play. **b.** Turn steering wheel through full range and check for binding or excessive steering. **AFTER ROAD TEST** Perform all After (A) operation, Weekly (W), and Monthly (M) checks in TM 9-2320-260-10 PMCS and make the following inspections in given order, including kit items on vehicles so-equipped. WARNING • Do not perform battery system checks or inspections near open flame. Injury to personnel may result. • Remove all jewelry. If jewelry or disconnected ground cable contacts battery terminal, a direct short will result, and may cause injury to personnel.	Steering wheel binds, or excessive steering is evident.
8	Semi-annual	Batteries	Check and record specific gravity of each cell. Check electrolyte level. If low, add distilled water. Inspect battery cables for frays, splits, corrosion, and security. Clean top of batteries and lightly coat terminals with GAA grease (TM 9-2320-200-14).	a. Batteries are cracked, leaking, broken, burned, or posts are broken. b. If cell is below 1.285 specific gravity. c. Cables are frayed, split, or loose.
9	Semi-annual	Air cleaner indicator	Test air cleaner indicator (1) for proper operation (TM 9-2320-260-10).	Air cleaner indicator is inoperative or red band is showing.

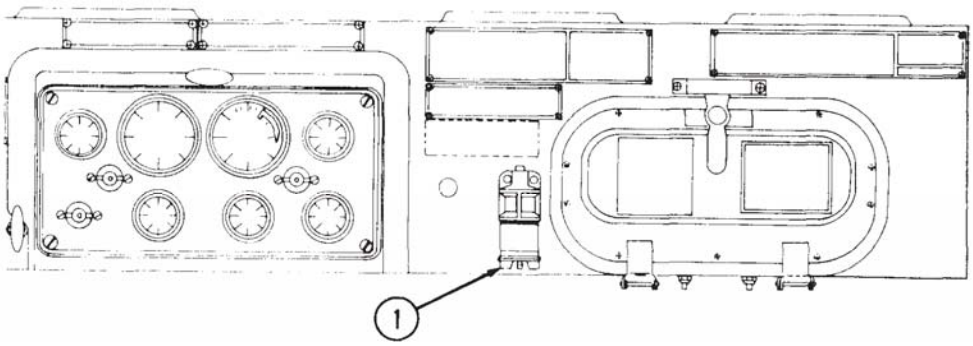

Table 2-1. Unit Level Preventive Maintenance Ckecks and Services (Contd).

ITEM NO.	INTERVAL	ITEM TO CHECK/ SERVICE	PROCEDURE	NOT FULLY MISSION CAPABLE IF:
10	Semi-annual	Data, caution, and warning plates	Inspect for completeness, security, and readability (para. 1-13).	
			ENGINE COMPARTMENT	
			WARNING If NBC exposure is suspected, all air filter media should be handled by personnel wearing protective equipment. Consult your unit NBC officer or NBC NCO for appropriate handling or disposal instructions.	
			NOTE Open hood and secure with holddown catch (TM 9-2320-260-10).	
11	Semi-annual	Air intake system	**a.** Inspect air cleaner (4) and air intake tube (3) for security and damage. Tighten if loose. Replace if damaged (para. 3-15 or 3-16).	
			b. Check air cleaner indicator tube (2) for kinks and bends (para. 3-18).	
			c. Inspect air cleaner element (5) for tears and presence of dirt and oil. Clean or replace as necessary (para. 3-17).	Air cleaner element is torn, dirty, or contaminated.
12	Semi-annual	Air compressor	Inspect air compressor (6) for secure mounting. Tighten 40-45 lb-ft (54-61 N•m) if loose (para. 8-25).	Air compressor is loose.

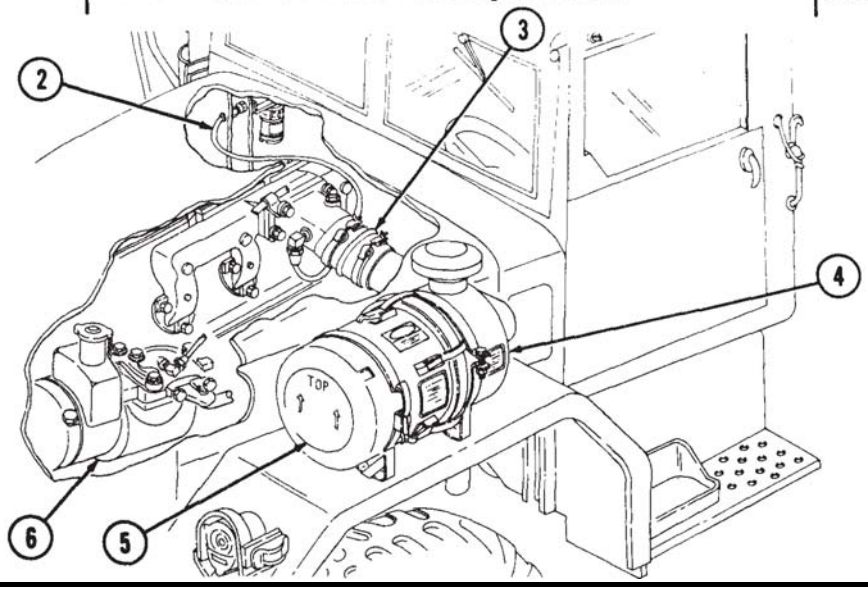

Table 2-1. Unit Level Preventive Maintenance Checks and Services (Contd).

ITEM NO.	INTERVAL	ITEM TO CHECK/ SERVICE	PROCEDURE	NOT FULLY MISSION CAPABLE IF
13	Semi-annual	Alternator and alternator wiring	**a.** Inspect alternator (6) for secure mounting. **b.** If loose, tighten two screws (1) on alternator adjusting link (2) 25-31 lb-ft (34-42 N•m). **c.** Tighten two nuts (5) and screws (3) on each side of alternator mounting bracket (4) 50-55 lb-ft (68-75 N•m). **d.** Inspect alternator wiring for burned or frayed wires and loose or broken terminal connections. Tighten if loose. Replace or repair wiring if burned, frayed, or broken (para. 4-52).	Alternator is loose or screws and nuts missing. Wiring insulation is missing, frayed, split, or poor connections are evident.
14	Semi-annual	Preheater nozzle and glow plug	Inspect tubing (8) and wiring (7) for loose connections and leaks. Tighten if leaking or loose (para. 3-30).	

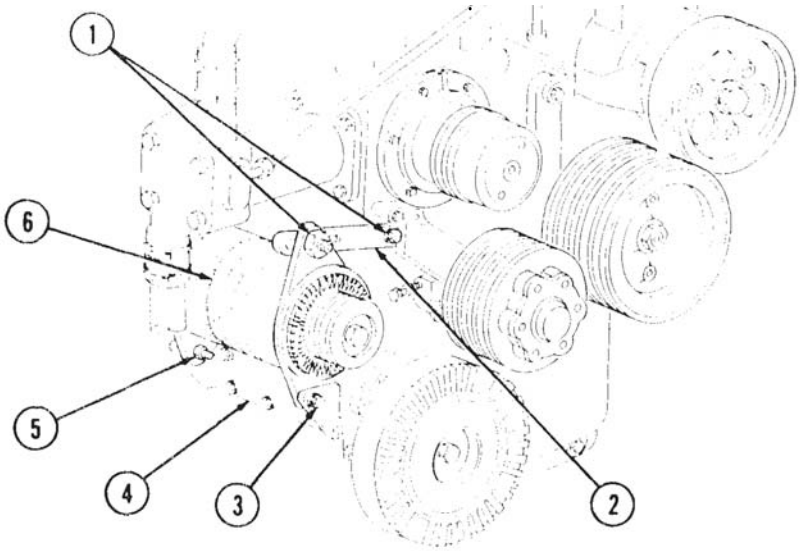

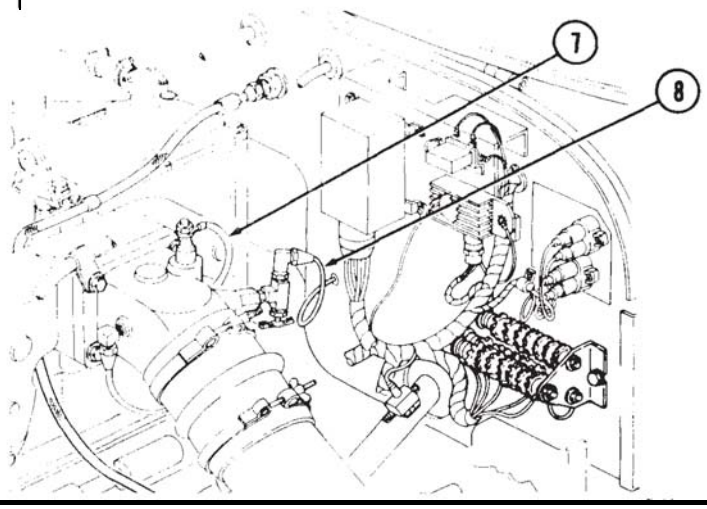

Table 2-1. Unit Level Preventive Maintenance Checks and Services (Contd).

ITEM NO.	INTERVAL	ITEM TO CHECK/ SERVKE	PROCEDURE	NOT FULLY MISSION CAPABLE IF:
15	Semi-annual	Cooling system	**a.** Inspect radiator (11) for clogged or bent fins and protruding objects. Clean radiator (11) and straighten bent fins. Replace if damaged (para. 3-50).	Radiator is clogged, bent, or damaged.
			b. Test coolant freeze point to determine if solution is proper for climate (para. 3-45).	
			c. Inspect radiator (11) for corrosion. If excessive corrosion is found, flush radiator (11). Flush radiator (11) and cylinder block (13) every four years (para. 3-45).	
			d. Inspect radiator mounts (12) for cracks, breaks, and loose condition. Tighten if loose. Replace if broken or cracked (para. 3-50).	Radiator mounts are cracked, broken, or loose.
			e. Inspect water pump (10) for cracks, leaks, and loose condition. Tighten if loose. Replace water pump (10) if broken or cracked (para. 3-55).	Water pump is cracked, leaking, or loose.
			f. Inspect fan mounting screws (14) for security. Tighten 25-31 lb-ft (34-42 N • m) if loose.	Fan mounting screws are loose or missing.
			g. Inspect fan (9) for cracks, bent blades, and missing or loose rivets and screws. Replace fan (9) if defective (para. 3-53).	Fan is cracked, bent, or broken.

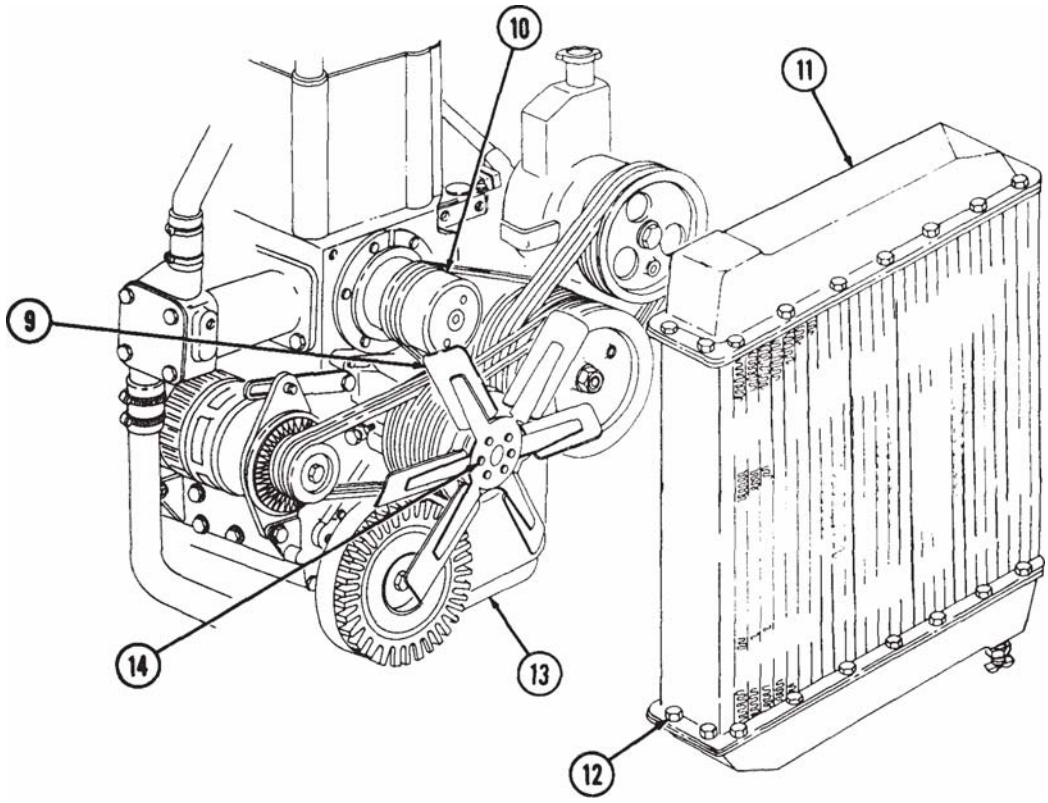

Table 2-1. Unit Level Preventive Maintenance Checks and Services (Contd).

ITEM NO.	INTERVAL	ITEM TO CHECK/ SERVICE	PROCEDURE	NOT FULLY MISSION CAPABLE IF:
16	Semi-annual	Fuel filter	**WARNING** Drycleaning solvent is flammable and will not be used near open flame. Use only in well-ventilated places. Keep fire extinguisher nearby. Failure to do so may result in injury to personnel. NOTE • On M816 and M819 vehicles, this procedure is done from beneath the vehicle. • Numbers in brackets refer to items found in Mandatory Replacement Parts List (page 2-65). **a.** Clean filter body (2) and filter head (1) with dry-cleaning solvent. Dry with lint-free cloth. **b.** Replace fuel filter element (3) [3] and [4] every 3 months or 3,000 mi (4,827 km), whichever occurs first (para. 3-26).	

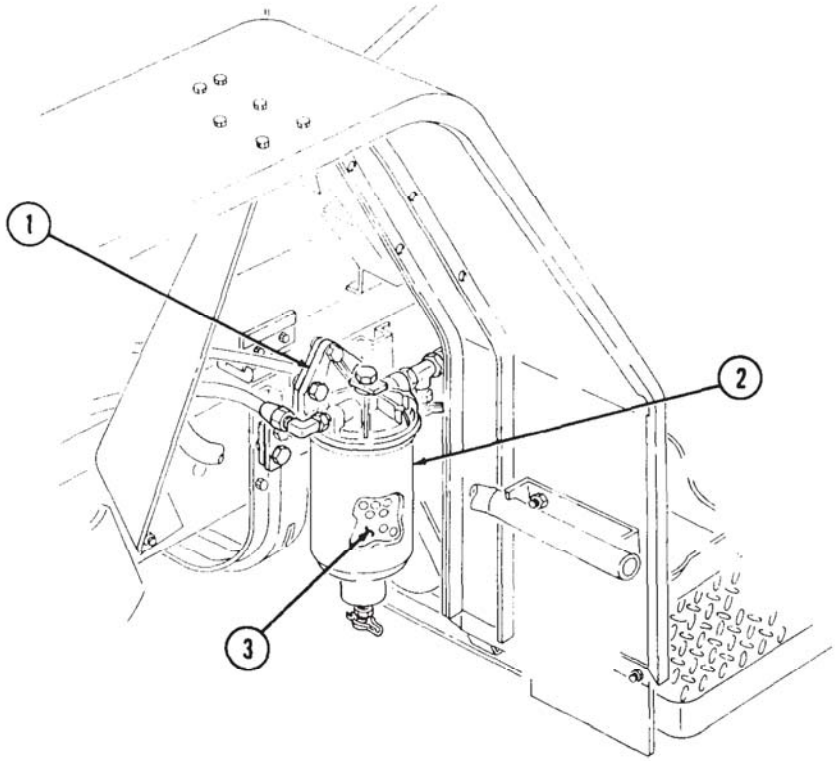

Table 2-1. Unit Level Preventive Maintenance Checks and Services (Contd).

ITEM No.	INTERVAL	ITEM TO CHECK/ SERVICE	PROCEDURE	NOT FULLY MISSION CAPABIE IF:
17	Semi-annual	Engine oil and oil filter	**a. Check Oil Level.** 1. Sample oil level every 60 days or 1,000 mi (1,609 km). Army Reserve Units shall sample every 120 days or 1,000 mi (1,609 km). 2. Submit oil samples to oil analysis laboratory immediately. 3. Oil and oil filter element shall be changed only when directed by oil analysis laboratory. 4. If oil analysis laboratory is not available, change oil and oil filter element every 6 months or 6,000 mi (9,654 km). 5. Daily check and adjust the oil level as required prior to engine operation. 6. Engine dipstick (4) is located on right side of engine. 7. Remove dipstick (4) from dipstick tube (5), turning counterclockwise. 8. Wipe dipstick (4) and return to dipstick tube (5). 9. Turn dipstick (4) counterclockwise and withdraw slowly to ensure accurate reading. 10. There are two marks on the dipstick (4), HIGH and LOW. 11. If engine oil is at or below LOW level mark on dipstick (4), reference LO 9-2320-260-12. The quantity of oil required to raise the oil level from the LOW mark to the HIGH mark is approximately 7 qt (6.6 L). 12. Recheck engine oil level after adding oil. Ensure oil level is between HIGH and LOW. 13. If water or metal particles are detected on dipstick (4) or in oil sample, notify your supervisor.	Metal particles are found on oil dipstick or in oil sample.

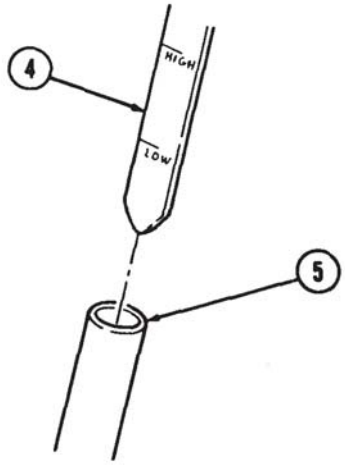

Table 2-1. Unit Level Preventive Maintenance Checks and Services (Contd).

ITEM NO.	INTERVAL	ITEM TO CHECK/ SERVICE	PROCEDURE	NOT FULLY MISSION CAPABLE IF:

LUBRICANT	ABOVE 15°F (ABOVE -9ºC)	+40ºF TO -15°F (+4°C TO -26ºC)	+40°F TO -65°F (+4°C TO -54°C)
OE/HDO Lubricating oil, internal combustion engine (MIL-L-2104)	All Temperatures	All Temperatures	
OEA Lubricating oil, internal combustion engine (arctic) (MIL-L-46167)			All temperatures

17	Semi-annual	Engine oil and oil filter (Contd)	WARNING Do not drain oil while engine is hot. Injury to personnel may result. **NOTE** •Have drainage container ready to catch oil. Replace oil filter element each time crankcase is drained. • Numbers in brackets refer to items found in Mandatory Replacement Parts List (page 2-65). **b. Drain Oil from Crankcase.** 1. Remove drain plug (6) and gasket (7) [7] from oil pan (8) and allow oil to drain completely. Discard gasket (7) [7]. 2. Install new gasket (7) [7] and drain plug (6) on oil pan (8). Tighten drain plug (6) 25-35 lb-ft (34-48 N•m). **c. Filter Removal.** 1. Loosen center bolt (5) and remove oil filter housing (4) from oil pump (1). 2. Remove oil filter element (3) [6] and filter seal (2) *[5]* from oil filter housing (4). Discard oil filter element (3) [61 and filter seal (2) [51. **d. Oil Filter Element Installation.** 1. Insert new oil filter element (3) [6] in oil filter housing (4). 2. Apply light film of lubricating oil on new filter seal (2) [5] and install filter seal (2) [5] on sealing surface of oil pump (1). 3. Install oil filter housing (4) on oil pump (1) with center bolt (5). Tighten center bolt (5) 25-35 lb-ft (34-47 N•m).	

Table 2-1. Unit Level Preventive Maintenance Checks and Services (Contd).

Item NO.	INTERVAL	ITEM TO CHECK/ SERVICE	PROCEDURE	NOT FULLY MISSION CAPABLE IF:
17	Semi-annual	Engine oil and oil filter (Contd)	**e. Fill Crankcase.** 1. Crankcase capacity is 23 qt (21.8 L), and oil filter capacity is 4 qt (3.8 L). 2. With new oil filter element (3) [6] installed, fill crankcase with 27 qt (25.5 L) of engine lubricating oil. 3. Start engine (TM 9-2320-260-10) and visually check for oil leaks at drain plug (6) and oil filter housing (4). 4. Stop engine for approximately one minute to allow oil to drain back into pan (8). 5. Recheck oil level with dipstick.	

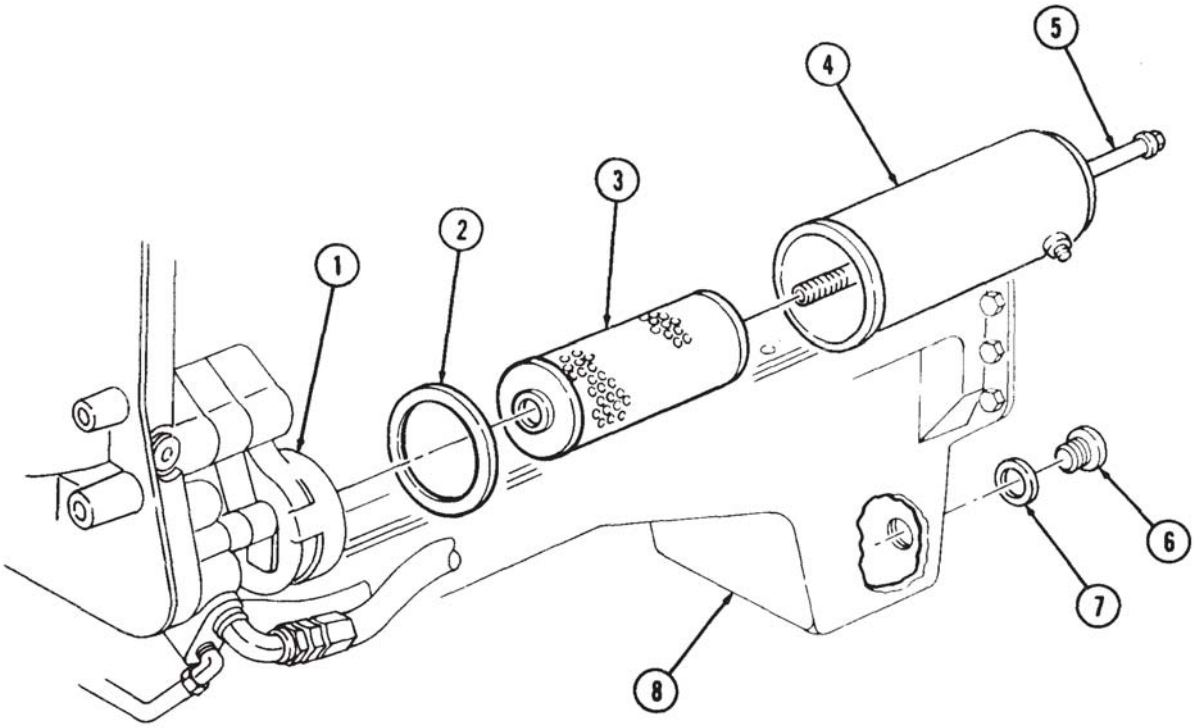

Table 2-1. Unit Level Preventive Maintenance Checks and Services (Contd).

ITEM NO.	INTERVAL	ITEM TO CHECK/ SERVICE	PROCEDURE	NOT FULLY MISSION CAPABIE IF:
18	Semi-annual	Engine crankcase breather	**a.** Inspect engine crankcase breather (1) for clogging. Remove and clean if clogged (para. 3-4). **b.** If vehicle is equipped with clean air system, replace engine crankcase breather (1) (para. 3-4).	
19	Semi-annual	Vibration damper	**a.** Ensure vibration damper (2) inner and outer alignment marks are aligned. Notify your supervisor if not aligned properly. WARNING Stay clear of moving parts while engine is running. Failure to do so may result in injury or death to personnel. **b.** With engine started and at idle, visually inspect vibration damper (2) for wobble and runout. Notify your supervisor if wobble or runout exists.	Vibration damper inner and outer alignment marks do not align. Vibration damper wobbles, or runout exists.

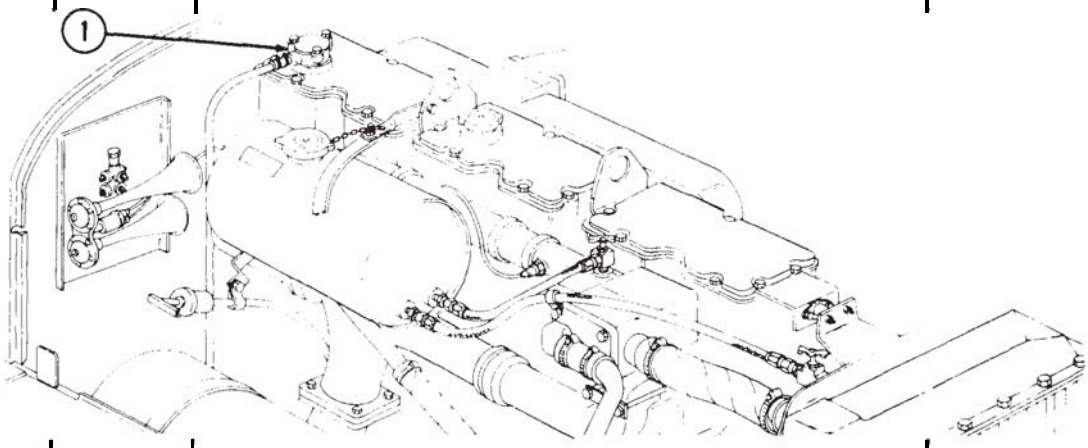

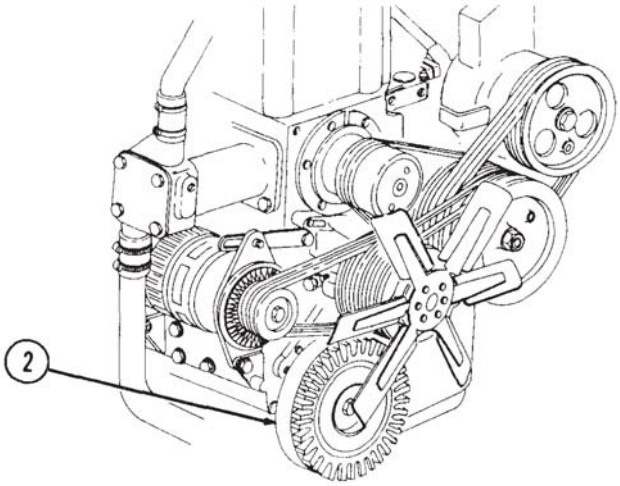

Table 2-1. Unit Level Preventive Maintenance Ckecks and Services (Contd).

ITEM NO.	INTERVAL	ITEM TO CHECK/ SERVICE	PROCEDURE	NOT FULLY MISSION CAPABLE IF:
20	Semi-annual	Engine mounts	Inspect front and rear engine mounts for loose screws and broken, split, or missing rubber mounts. Tighten rear mount screws 75-83 lb-ft (102-113 NŽm) and front mount screws 140-160 lb-ft (190-217 NŽm), if loose. Notify your supervisor if rubber mounts are broken, split, or missing. NOTE Steering gear receives lubrication from power steering pump.	Rubber mounts are broken, split, or missing.
21	Semi-annual	Power steering pump and hoses	**a.** Inspect power steering pump (3) for cracks and dents. Notify your supervisor if cracked or dented. **b.** Check power steering pump (3) oil level weekly. Add fluid if necessary. **c.** Inspect hoses (4) for cracks, bends, breaks, and leaks. Replace if cracked, bent, broken, or leaking (para. 9-18). Hose and leak check may be completed when under the vehicle.	Power steering pump is cracked or dented. Hoses are cracked, bent, broken, or leaking.

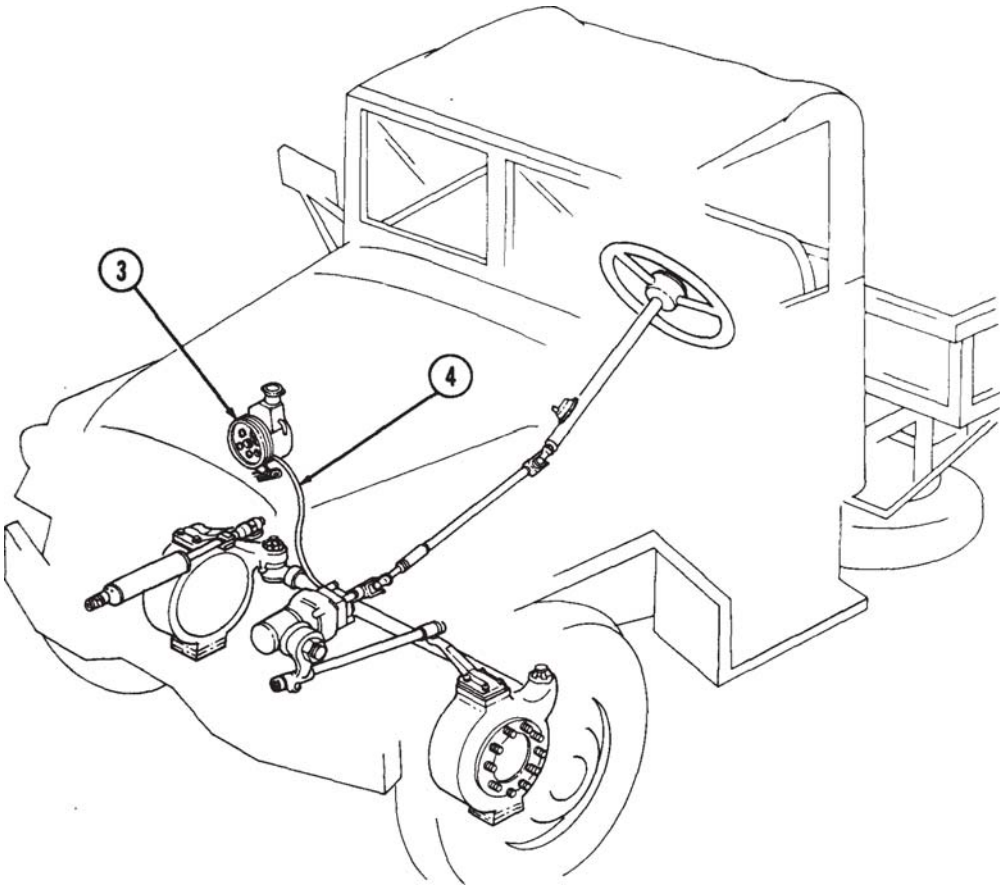

Table 2-1. Unit Level Preventive Maintenance Checks and Services (Contd).

ITEM NO.	INTERVAL	ITEM TO CHECK/ SERVICE	PROCEDURE	NOT FULLY MISSION CAPABLE IF:

LUBRICANTS	EXPECTED TEMPERATURES		
	ABOVE 15°F (ABOVE -9°C)	+40°F TO -15°F (+4°C TO -26°C)	+40°F TO -65°F (+4°C TO -54°C)
GAA - Grease, automotive and artillery (MIL-G-10924)	All Temperatures		

			FRONT VEHICLE - UNDERSIDE	
22	Semi-annual	Steering gear	**a.** Inspect for security. Tighten steering gear mounting hardware 62-88 lb-ft (84-119 NŽm), if loose. **NOTE** If necessary, rotate shaft to gain access to fittings. **b.** Lubricate two steering fittings (2) on gear shaft (1) with GAA every 3 months or 3,000 mi (4,827 km).	Steering gear is loose.

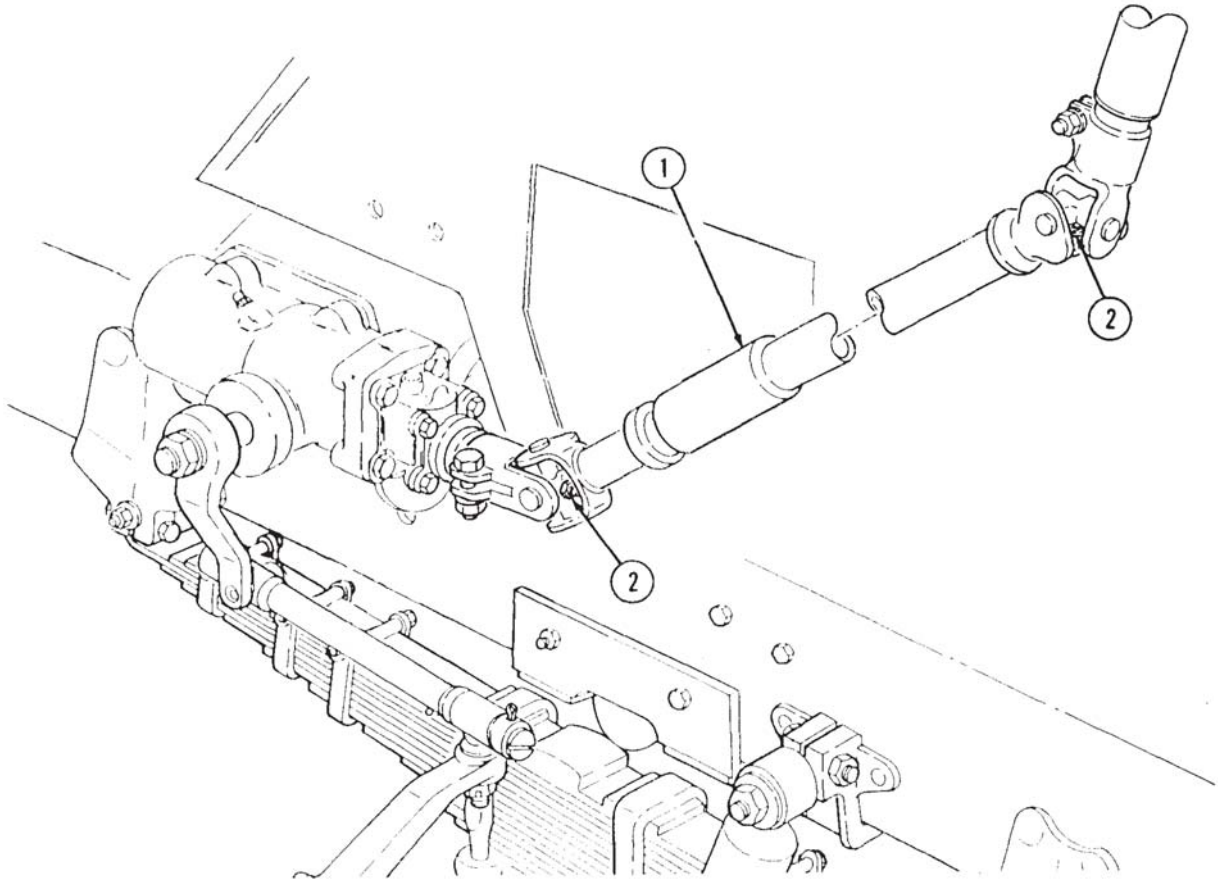

Table 2-1. Unit Level Preventive Maintenance Ckecks and Services (Contd).

ITEM NO.	INTERVAL	ITEM TO CHECK/ SERVICE	PROCEDURE	NOT FULLY MISSION CAPABLE IF:

LUBRICANTS	EXPECTED TEMPERATURES		
	ABOVE 15°F (ABOVE -9°C	+40°F TO -15°F (+4°C TO -26°C)	+40°F TO -65°F (+4°C TO -54°C)
GAA - Grease, automotive and artillery (MIL-G-10924)	All Temperatures		

23	Semi-annual	Power steering assist cylinder	a. Inspect power steering assist cylinder (3) for bends, breaks, and leaks. Replace if bent, broken, or leaking (para. 9-10). **b.** Lubricate two fittings (4) with GAA every 3 months or 3,000 mi (4,827 km).	Power steering assist cylinder is bent, broken, or leaking.

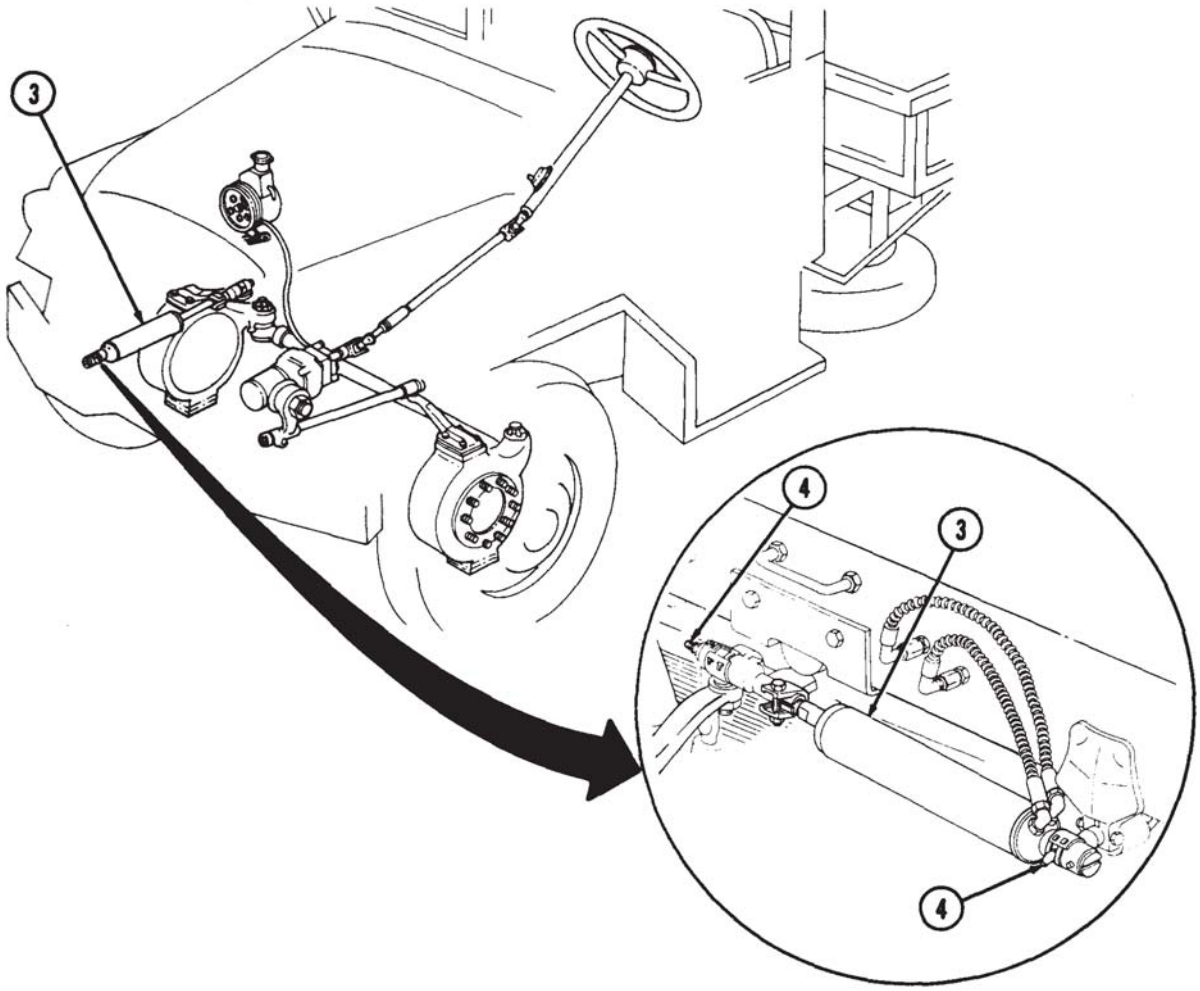

Table 2-1. Unit Level Preventive Maintenance Checks and Services (Contd).

LUBRICANTS	EXPECTED TEMPERATURES		
	ABOVE 15°F [ABOVE -9°C]	+40°F TO -15°F (+4°C TO -26°C]	+40°F TO -65°F (+4°C TO -54°C)
GAA - Grease, automotive and artillery (MIL-G-10924)	All Temperatures		
OE-HDO - Lubricating oil, internal combustion engine (MIL-L-2104) **OEA** - Lubricating oil, internal combustion engine (arctic) (MIL-L-46167)	OE/HDO 30	OE/HDO 30	OEA

ITEM NO.	INTERVAL	ITEM TO CHECK/ SERVICE	PROCEDURE	NOT FULLY MISSION CAPABLE IF:
24	Semi-annual	Steering knuckles and steering arm	Inspect for breaks, cracks, and loose condition. Tighten if loose. Notify your supervisor if damaged.	Steering knuckles are broken, cracked, or loose.
25	Semi-annual	Tie rod, drag link, and pitman arm	**a.** Inspect for breaks, cracks, and loose condition. Tighten if loose. Replace if cracked or broken (para. 9-9, 9-11, or 9-12). **b.** Lubricate two drag link fittings (10) and tie rod end fitting (9) at each side of vehicle with GAA every 3 months or 3,000 mi (4,827 km) (LO 9-2320-260-12).	Tie rod, drag link, or pitman arm is cracked or broken.
26	Semi-annual	Front end alignment	Check front end for correct alignment. Correct toe-in is 1/16-3/16 in. (1.588-4.762 mm). Adjust toe-in if necessary (para. 9-8).	
27	Semi-annual	Front axle and differential	Check each for overheating, which can indicate low lubrication levels. If any of these components are overheated, check fluid level, and add or fill if necessary. **a.** Ensure axle housing (1) grease fittings and plugs are present and tight. Replace if missing. Tighten if loose. **b.** Remove breather valve (2), and clean, check, and oil sparingly with 0E/HD0. Lubricate with OE/HDO every 1,000 mi (1,609 km). If vehicle does not accumulate 1,000 mi (1,609 km) in a 6-month period, lubricate at time of preventive maintenance service. c. Inspect differential (3) seals for leaks. Notify your supervisor if leaking.	

Table 2-1. Unit Level Preventive Maintenance Ckecks and Services (Contd).

ITEM NO.	INTERVAL	ITEM TO CHECK/ SERVICE	PROCEDURE	NOT FULLY MISSION CAPABLE IF:

LUBRICANTS	EXPECTED TEMPERATURES		
	ABOVE 15°F (ABOVE -9°C)	+40°F TO -15°F (+4°C TO -26°C)	+40°F TO -65°F (+4°C TO -54°C)
GAA - Grease, automotive and artillery (MIL-G-10924)	All Temperatures		

27	Semi-annual	**Front axle and differential (Contd)**	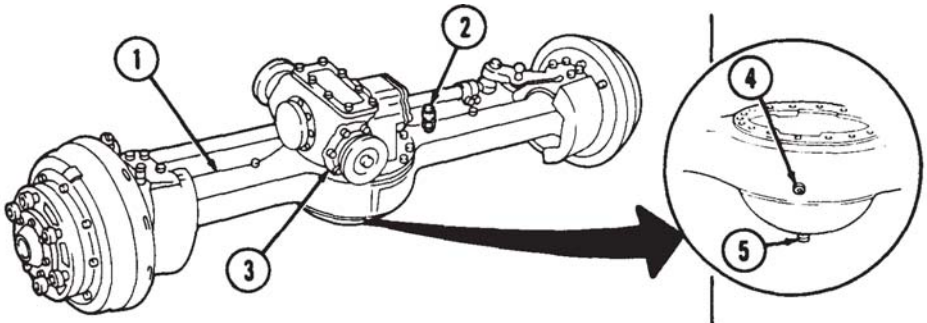 **d.** Ensure that differential fill plug (4) and drain plug (5) are not leaking and are tight. Replace if leaking. Tighten if loose.	
28	Semi-annual	**Front springs and shackles**	**a.** Inspect for cracks, breaks, and security. If spring U-bolts (7) are loose, tighten 360-400 lb-ft (488-542 N•m). Replace if cracked or broken (para. 7-15). **b.** Lubricate leaf spring shackle and grease fittings (6) with GAA every 1,000 mi (1,609 km).	U-bolts are cracked.
29	Semi-annual	**Shock absorbers and mounting brackets**	Inspect for looseness, wear, cracks, and leaks. Replace leaking shock absorbers (8) if more than a class I leak is found, or if worn or cracked (para. 7-19).	Shock absorbers are loose, worn, cracked, or leaking.

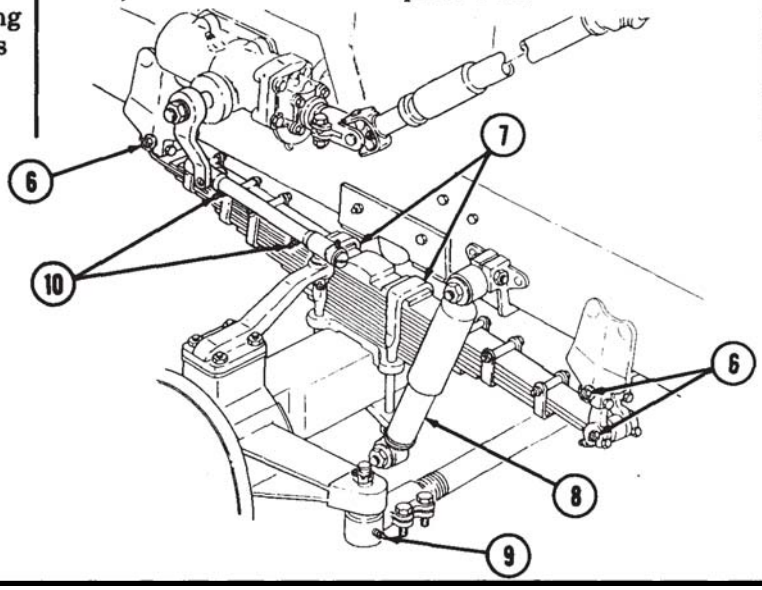

Table 2-1. Unit Level Preventive Maintenance Checks and Services (Contd).

ITEM NO.	INTERVAL	ITEM TO CHECK/ SERVICE	PROCEDURE	NOT FULLY MISSION CAPABLE IF:
30	Semi-annual	Trans-mission	**a.** Inspect transmission for loose screws and plugs that may cause leaks. Tighten if loose. **b.** Inspect transmission at engine mounting point for missing or loose mounting screws. Tighten mounting screws 23-26 lb-ft (31-35 N•m) if loose. **c.** Remove and clean transmission breather valve (l). 1. Wipe area around hole of transmission breather (1) with a rag. 2. Remove transmission breather valve (1) from transmission housing. WARNING Drycleaning solvent is flammable and will not be. used near open flame. Use only in well-ventilated places. Failure to do so may result in injury to personnel. 3. Clean transmission breather valve (1) with dry-cleaning solvent. 4. Install transmission breather valve (1) on trans-mission housing. **d.** Check transmission fluid level every 3,000 mi (4,827 km) (LO 9-2320-260-12). Add or remove fluid if necessary. Change gear lubricant only when required by maintenance repair action, or if contaminated by water or other foreign material. Drain only after operation when hot. Place vehicle in level position. Remove filler plug (2) and drain plug (3) from case, and after draining reinstall drain plug (3). Fill transmission within 1/2 in. (12.7 mm) of filler plug (2) opening if lubricant is cold, or to plug level if hot. Install filler plug (2).	Any class III leak. Transmission mount is loose, cracked, or damaged.

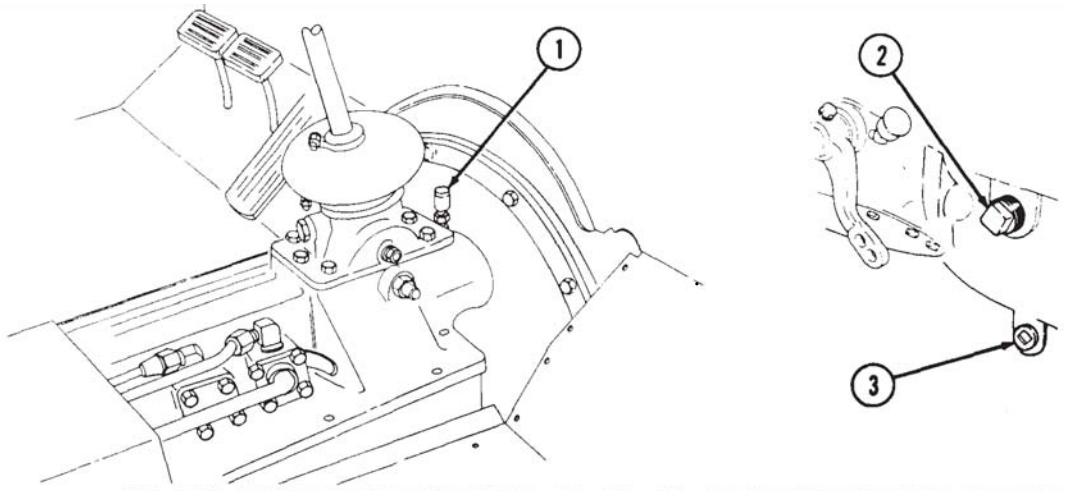

Table 2-1. Unit Level Preventive Maintenance Ckecks and Services (Contd).

ITEM No.	INTERVAL	ITEM TO CHECK/ SERVICE	PROCEDURE	NOT FULLY MISSION CAPABLE IF:
31	Semi-annual	Transfer case	**a.** Inspect transfer case (4) for oil leaks, cracks, and loose screws that may cause leaks. Notify your supervisor if leaks or cracks are found.	Any class III leak.
			b. Inspect transfer case (4) for loose mounting screws and nuts. Tighten transfer case (4) stud nuts 125-135 lb-ft (170-183 N•m), if loose. Tighten transfer case (4) support bracket screws and nuts 65-70 lb-ft (88-95 N•m), if loose.	Transfer mount is loose or damaged.
			c. Remove and clean transfer case breather valve (5). 1. Wipe area around breather valve (5) with rag. 2. Remove transfer case breather valve (5) from transfer case (4). WARNING Drycleaning solvent is flammable and will not be used near open flame. Use only in well-ventilated places. Failure to do so may result in injury to personnel. 3. Clean transfer case breather valve (5) with drycleaning solvent and dry with a lint-free clean rag. 4. Install transfer case breather valve (5) on transfer case (4).	
			d. Check transfer case (4) oil level at fill plug (6) every 3,000 mi (4,827 km) (LO 9-2320-260-12).	
			e. Change lubricant only when required by maintenance repair action, or if contaminated by water or other foreign material. Drain only after operation when hot. Place vehicle in level position. Remove filler plug (6) and drain plug (7) from case, and after draining reinstall drain plug (7). Fill transfer case (4) within 1/2 in. (12.7 mm) of filler plug (6) opening, when lubricant is cold, or to plug level when hot. Install filler plug (6).	

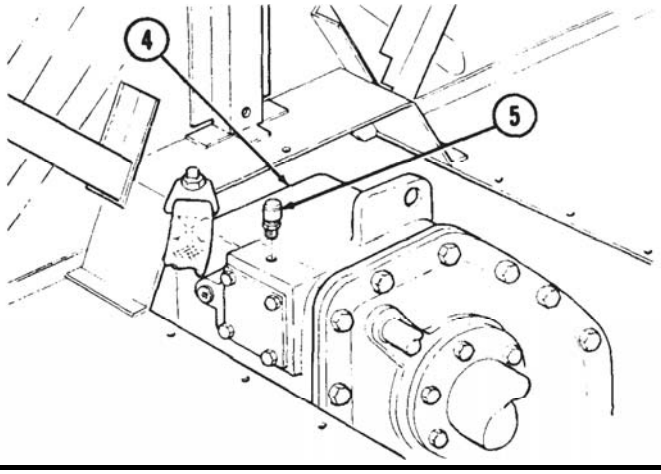

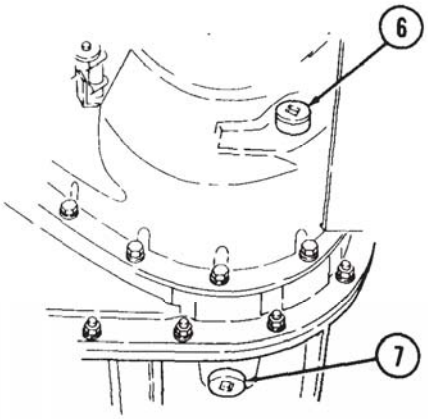

Table 2-1. Unit Level Preventive Maintenance Checks and Services (Contd).

ITEM NO.	INTERVAL	ITEM TO CHECK/ SERVICE	PROCEDURE	NOT FULLY MISSION CAPABLE IF:
31	Semi-annual	Transfer case (Contd)	f. Lubricate transfer case shift linkage pins (1) every 1,000 mi (1,609 km). If vehicle does not accumulate 1,000 mi (1,609 km) in a 6-month period, then transfer case shift linkage pins (1) will be lubricated at time of preventive maintenance service.	

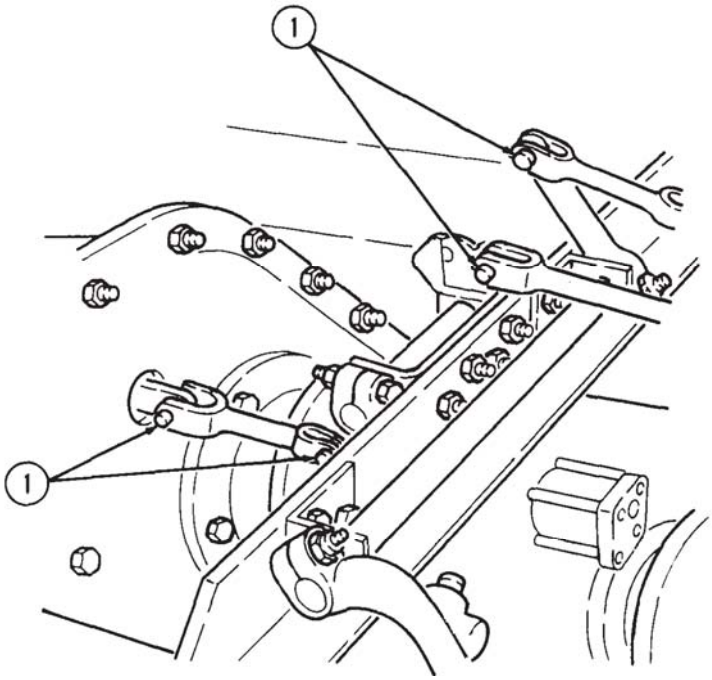

Table 2-1. Unit Level Preventive Maintenance Check and Services (Contd).

ITEM No.	INTERVAL	ITEM TO CHECK/ SERVICE	PROCEDURE	NOT FULLY MISSION CAPABLE IF:
32	Semi-annual	Power divider (M-816)	**a.** Inspect power divider (2) for oil leaks, cracks, and loose screws that may cause leaks. Notify your supervisor if leaks or cracks are found. **b.** Service power divider (2) annually or every 12,000 mi (19,308 km), whichever occurs first. **c.** Change lubricant only when required by maintenance repair action, or if contaminated by water or other foreign material. Drain only after operation when hot. Place vehicle in level position. Remove filler plug (3) and drain plug (4) from case, and after draining, reinstall drain plug (4). Fill power divider (M816) within 1/2 in. (12.7 mm) of filler plug (3) opening, when lubricant is cold, or to plug level when hot. Install filler plug (3).	Any class III leak.

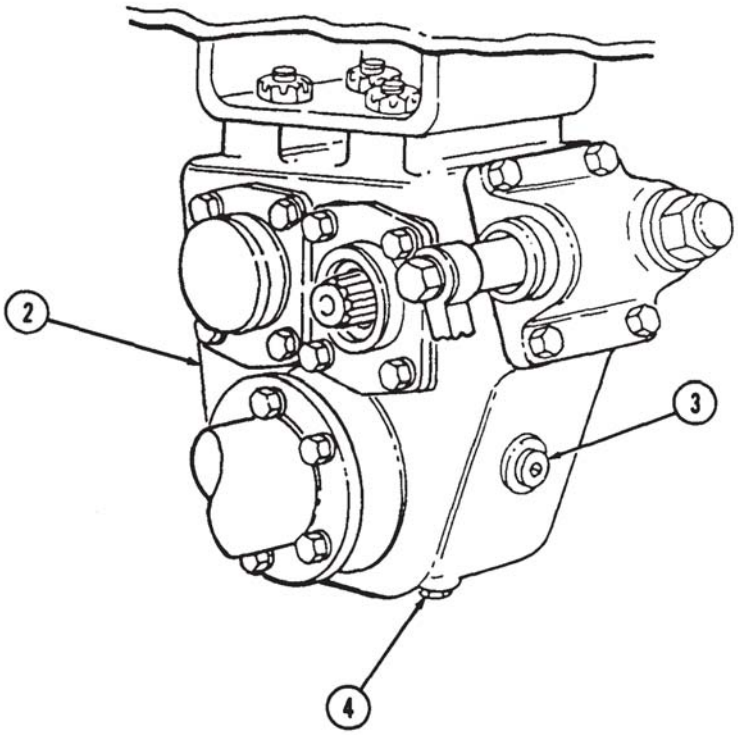

Table 2-1. Unit Level Preventive Maintenance Checks and Services (Contd).

ITEM NO.	INTERVAL	ITEM TO CHECK/ SERVICE	PROCEDURE	NOT FULLY MISSION CAPABLE IF:

LUBRICANTS	EXPECTED TEMPERATURES		
	ABOVE 15°F (ABOVE -9°C)	+40°F TO -15°F (+4°C TO -26°C)	+40°F TO -65°F (+4°C TO -54°C)
GAA - Grease, automotive and artillery (MIL-G-10924)	All Temperatures		

33	Semi-annual	Speed-ometer adapter	**a.** Lubricate fitting (2) of speedometer adapter (1) with GAA every 3 months or 3,000 mi (4,827 km), whichever occurs first.

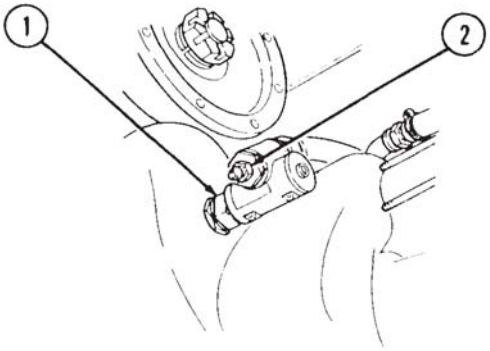

34	Semi-annual	Parking brake (hand) brake-shoe	**a.** Lubricate fittings (4) of parking brake (hand) brakeshoe (3) with GAA every 1,000 mi (1,609 km). If vehicle does not accumulate 1,000 mi (1,609 km) in a 6-month period, then lubricate at time of preventive maintenance service.

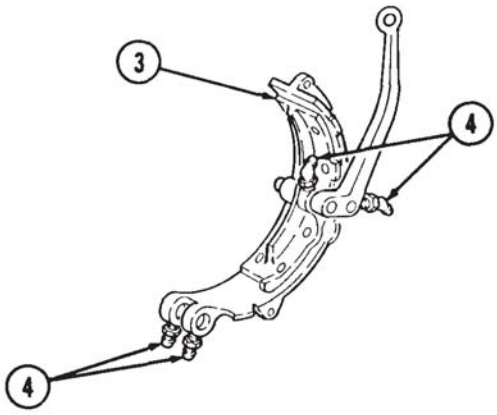

Table 2-1. Unit Level Preventive Maintenance Checks and Services (Contd).

ITEM NO.	INTERVAL	ITEM TO CHECK/ SERVICE	PROCEDURE	NOT FULLY MISSION CAPABLE IF:

LUBRICANTS	EXPECTED TEMPERATURES		
	ABOVE 15°F (ABOVE -9°C)	+40°F TO -15°F (+4°C TO -215°C)	+40°F TO -65°F (+4°C TO -54°C)
GM - Grease, automotive and artillery (MIL-G-10924)	All Temperatures		

35	Semi-annual	Front axle differential, transmission to transfer case, power divider to transfer case, power takeoff universal and slip joints	**a.** Lubricate all universal joints (5) and slip joints (6) with GAA every 3 months or 3,000 mi (4,827 km), whichever occurs first. **NOTE** If pressure fittings are required, refer to TM 9-2320-260-20P for specific types. **b.** On universals equipped with plugs, remove filler plugs and install pressure fittings; lubricate using low pressure lubrication gun. If operating conditions are severe or abnormal, service at 1,000 mi (1,609 km).	

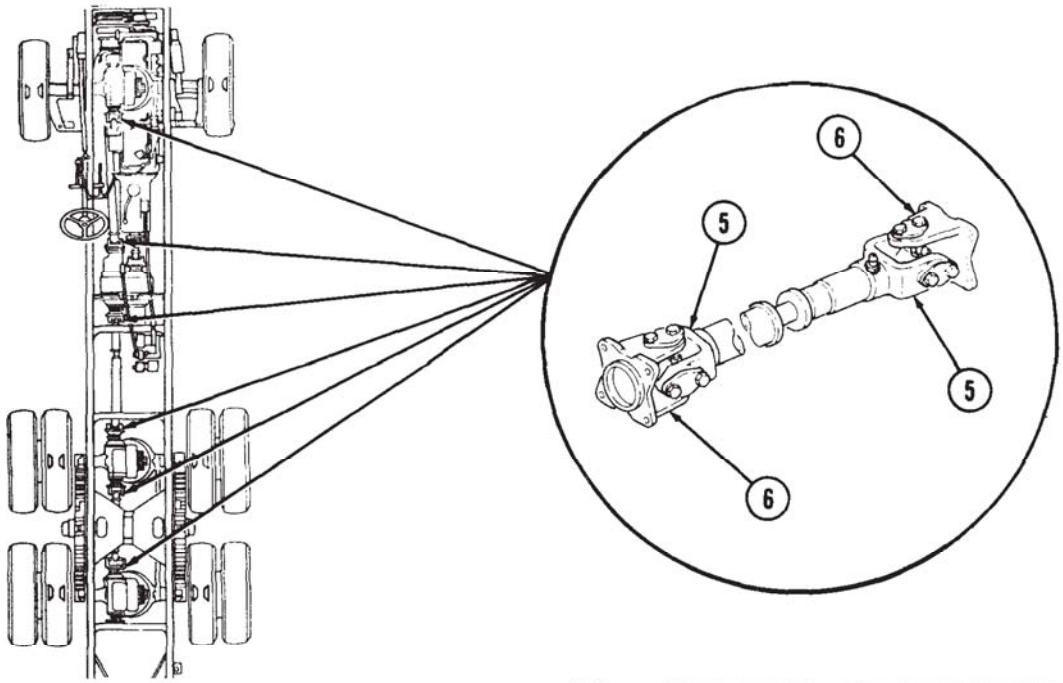

Table 2-1. Unit Level Preventive Maintenance Checks and Services (Contd).

ITEM NO.	INTERVAL	ITEM TO CHECK/ SERVICE	PROCEDURE	NOT FULLY MISSION CAPABLE IF:

LUBRICANTS	EXPECTED TEMPERATURES		
	ABOVE 15°F (ABOVE -9°C)	+40°F TO -15°F (+4°C TO -26°C)	+40°F TO -65°F (+4°C TO -54°C)
GAA - Grease, automotive and artillery (MIL-G-10924)	All Temperatures		

35	Semi-annual	Front axle differential, transmission to transfer case, power divider to transfer case, power takeoff universal and slip joints (Contd)	**c.** Lubricate center bearing (1) with GAA semiannually or every 3,000 mi (4,827 km), whichever occurs first.	

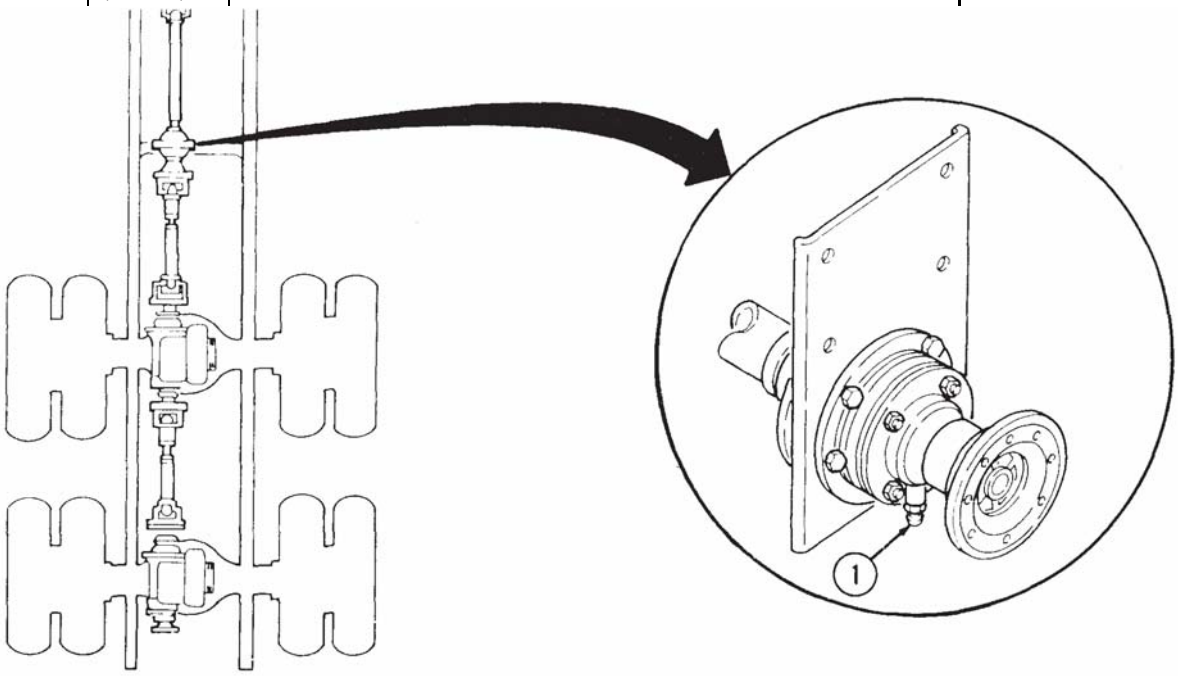

Table 2-1. Unit Level Preventive Maintenance Checks and Services (Contd).

LUBRICANTS	EXPECTED TEMPERATURES			
	ABOVE 15°F (ABOVE -9°C)	+40°F TO -15°F (+4°C TO -26°C)	+40°F TO -65°F (+4°C TO -54°C)	
GAA - Grease, automotive and artillery (MIL-G-10924)	All Temperatures			
CW - Lubricating oil, chain wire rope, exposed gear (VV-L-751)	ABOVE +80°F (+27°C)	+80° TO +30°F (+27° TO -1°C)	+30° TO -30°F (-1° TO -34°C)	-30° TO -65°F (-34° TO -54°C)
Winch wire rope	CW-IIC	CW-IIB	CW-IIA	GO 75

ITEM NO.	INTERVAL	ITEM TO CHECK/ SERVICE	PROCEDURE	NOT FULLY MISSION CAPABLE IF:
			REAR VEHICLE - UNDERSIDE	
36	Semi-annual	Propeller shafts	**a** Check all propeller shafts for bends, cracks, and loose condition. Tighten mounting screws 32-40 lb-ft (43-54 N•m), if loose. Replace if cracked or broken (para. 7-2 or 7-3).	Loose, missing, or broken bolts.
			b. Inspect universal joints to ensure there is no play, broken retaining clips or bearing cups, or missing lubrication fittings (para. 7-5).	Damaged, unserviceable, or missing U-joints or lubrication fittings.
			c. Lubricate universai joint fittings with GAA semi-annually or every 3,000 mi (4,827 km), whichever occurs first.	
37	Semi-annual	Rear winch drive	**a.** Lubricate pillow block (2) with GAA semiannually or every 3,000 mi (4,827 km), whichever occurs first. If operation is frequent, or under severe conditions, service weekly.	
			b. Lubricate drive sprocket bearing (3) with GAA semiannually or every 3,000 mi (4,827 km), whichever occurs first. If operation is frequent or under severe conditions, service weekly.	
			c. Lubricate drive chain (4) lightly with CW every 3,000 mi (4,827 km) or semiannually, whichever occurs first. If operation is frequent, or under severe conditions, service weekly.	

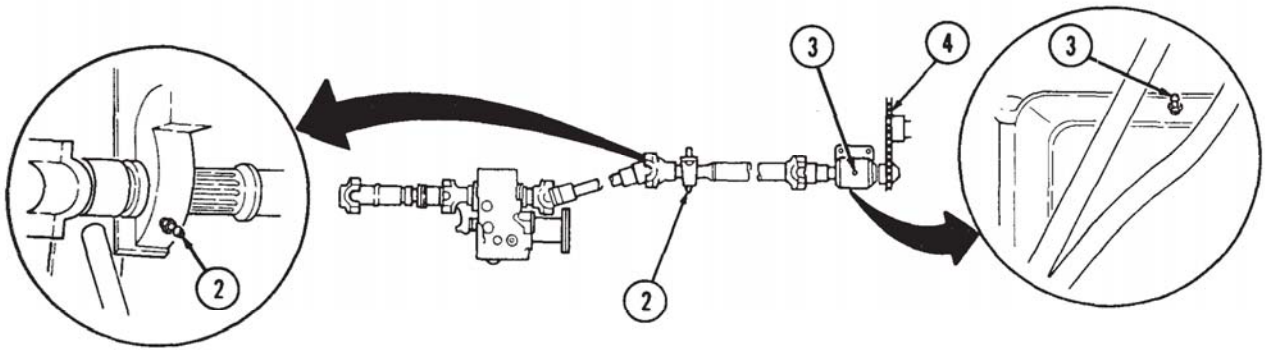

Table 2-1. Unit Level Preventive Maintenance Checks and Services (Contd).

ITEM NO.	INTERVAL	ITEM TO CHECK/ SERVICE	PROCEDURE	NOT FULLY MISSION CAPABLE IF:

LUBRICANTS	EXPECTED TEMPERATURES		
	ABOVE 15°F (ABOVE -9°C)	+40°F TO -15°F (+4°C TO -26°C	+40°F TO -65°F (+4°C TO -54°C)
OE/HDO - Lubricating oil, internal combustion engine (MIL-L-2104) **OEA** - Lubricating oil, internal combustion engine (arctic) (MIL-L-46167)	OE/HDO 30	OE/HDO 10	OEA
GO - Lubricating oil, gear multi-purpose (MIL-L-2105)	GO 80/90	GO 80/90	GO 75

38	Semi-annual	Rear axles and differentials	Check each for overheating, which can indicate low lubrication levels. If any of these components are overheated, check fluid level and add or fill if necessary (LO 9-2320-260-12). **a.** Ensure grease fittings and plugs of axle housing (1) are present and tight. Tighten if loose. Replace if missing. **b.** Inspect axle housing (1) for cracks that could cause leaks. Notify your supervisor if cracked. **c.** Remove and clean axle housing breather valve (2). 1. Wipe area around breathei valve (2) with rag. 2. Remove breather valve (2) from axle housing (1). WARNING Drycleaning solvent is flammable and will not be used near open flame. Use only in well-ventilated places. Failure to do so may result in injury to personnel. 3. Clean breather valve (2) with drycleaning solvent and dry with a clean rag. 4. Press breather valve (2) to confirm breather crimp cap is under spring tension. 5. Replace breather valve (2) if clogged or no spring tension is evident. 6. Oil breather valve (2) sparingly with OE/HDO. 7. Install breather valve (2) in axle housing (l). **d.** Lubricate with OE/HDO every 1,000 mi (1,609 km). If vehicle does not accumulate 1,000 mi (1,609 km) in a 6-month period, lubricate at time of preventive maintenance service.	

Table 2-1. *Unit Level Preventive Maintenance Checks and Services (Contd)*

ITEM NO.	INTERVAL	ITEM TO CHECK/ SERVICE	PROCEDURE	NOT FULLY MISSION CAPABLE IF:
38	Semi-annual	Rear axles and differentials (Contd)	**e.** Inspect differential seals for leaks. Notify your supervisor if leaking **f.** Ensure that differential fill plug (3) and drain plug (4) are not leaking and are tight. Tighten if loose. Replace if leaking. **g.** Change gear lubricant only when required by maintenance repair action or if contaminated by water or other foreign material. Drain only after operation when hot. Place vehicle in level position. Remove drain plug (4) and filler plug (3) from axle housing (1), and after draining reinstall drain plug (4). Fill axle housing (1) within 1/2 in. (12.7 mm) of filler plug (3) opening with GO lubricant if lubricant is cold, or to filler plug level if hot. Fill other gearcases to plug openings at all times and install filler plug (3). Clean breather valve (2) after operation in mud and water.	Any class III leak.

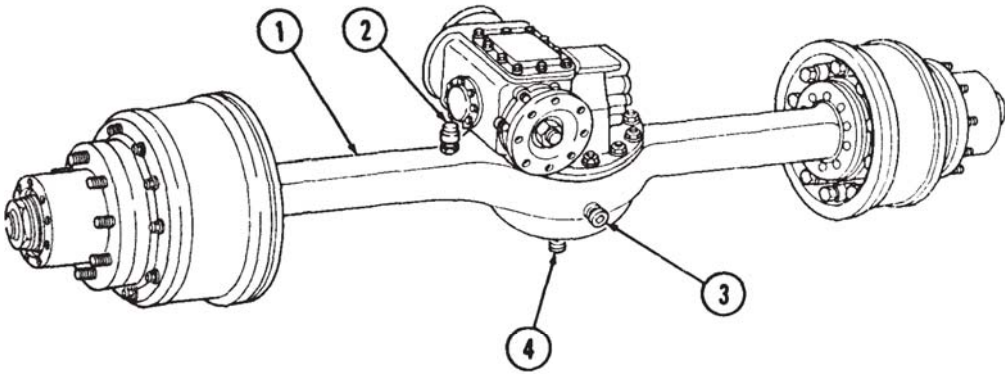

Table 2-1. Unit Level Preventive Maintenance Checks and Services (Contd).

ITEM NO.	INTERVAL	ITEM TO CHECK/ SERVICE	PROCEDURE	NOT FULLY MISSION CAPABLE IF:
39	Semi-annual	Rear springs and spring seats	**a.** Inspect spring leaves, retaining clips, and center bolts for breaks and looseness. Tighten if loose; replace if broken (para. 7-17). **b.** Inspect both front and rear spring wear pads (6) for wear. Replace if rear spring (5) is rubbing spring bracket (4) (para. 7-17). **c.** Test spring seat bearing freeplay by: 1. Placing a jack under spring seat bracket (9) and raising wheel off ground (para. 9-2). 2. Place a prybar between U-bolt saddle (2) and lifting pin (3). 3. Pull up on prybar. If there is any free play, adjust spring seat bearing (para. 7-18).	Springs are broken or loose.
			d. Inspect spring U-bolts (1) for looseness. If loose, tighten 300-400 lb-ft (407-542 N•m).	U-bolts are loose or broken.
40	Semi-annual	Torque rods	**a.** Inspect torque rods for cracks, looseness, and damage. Tighten nuts 350-400 lb-ft (475-542 N•m). Replace if cracked or broken. **b.** Check torque rods (7) for damage or worn bearings. 1. Place flat end of bar between torque rod (7) and mounting bracket (8). 2. Push on end of bar until hook end moves 4-6 in. (10-15 cm). 3. Release pressure on bar. Replace if torque rod (7) does not return to its original position (para. 7-20).	Torque rods are cracked, loose, or darnaged.

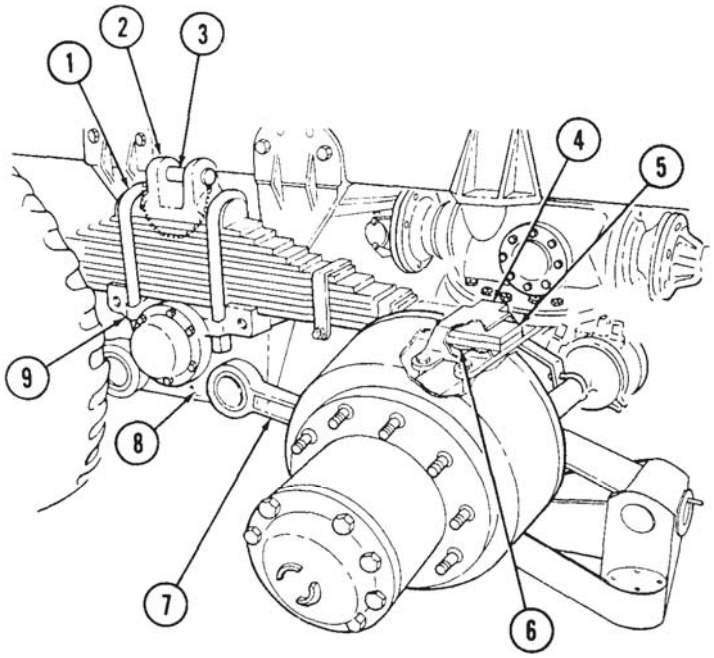

Table 2-1. Unit Level Preventive Maintenance Checks and Services (Contd).

ITEM NO.	INTERVAL	ITEM TO CHECK/ SERVICE	PROCEDURE	NOT FULLY MISSION CAPABLE IF:
			COMPLETE VEHICLE - UNDERSIDE	
41	Semi-annual	Compressed air system	Inspect air reservoirs, attaching valves, lines, and connections for security, bends, dents, and cracks that could cause leaks. Replace damaged parts (chapter 8, section III).	Air lines are bent, cracked, or leaking.
42	Semi-annual	Frame, cross-members, and fifth wheel	NOTE Penetration is reason to suspect that rivet non-nection and/or rivet should be replaced. **a. Riveted Frame Connections.** 1. Check for space between rivet head and rivet frame members. Place .001 -inch thick feeler gage between rivet head and riveted frame member. 2. Thoroughly clean rivet and riveted connection of all dirt, grease, and oil. 3. Apply lubricating oil around suspect rivet and riveted connection. Allow approximately 10 to 20 seconds for the oil to penetrate. Wipe rivet and riveted connection free of oil. Tap rivet with eight-pound hammer. Any indication of oil around rivet indicates a loose rivet. Replace all loose rivets. 4. Check all riveted connections for signs of movement, such as shiny spots or movement between rivet and framing member. If movement is indicated, rivet and connection are loose. Repair all loose connections. **b. Bolted Frame Connections.** 1. Perform inspection of bolted frame connections. 2. Check bolts and nuts for tightness and proper mating with frame surfaces. 3. Check torque of all bolts not scheduled to be removed in accordance with appendix D.	

Table 2-1. Unit Level Preventive Maintenance Checks and Services (Contd).

ITEM NO.	INTERVAL	ITEM TO CHECK/ SERVICE	PROCEDURE	NOT FULLY MISSION CAPABLE IF:

LUBRICANTS	EXPECTED TEMPERATURES		
	ABOVE 15°F (ABOVE -9°C)	+40°F TO -15°F (+4°C TO -26°C)	+40°F TO -65°F [+4°C TO -54°C]
GAA - Grease, automotive and artillery (MIL-G-10924)	All Temperatures		
OE/HDO - Lubricating oil, internal combustion engine (MIL-L-2104) **OEA -** Lubricating oil, internal combustion engine (arctic) (MIL-L-46167)	OE/HDO 30	OE/HDO 10	OEA

42	Semi-annual	Frame, cross-members, and fifth wheel (Contd)	**c. Welded Frame Connections.** 1. Perform inspection of welded frame connections. Where welds are found on vehicle, check for integrity, deterioraton, and flaking. 2. Check spare tire carrier for security, completeness of assembly, and proper operation. Replace if damaged (paras. 12-8, 12-14, 12-46, 12-65, or 12-72). 3. Check operation of towing pintle hook (3). Inspect pintle (4) and bracket (1) for cracks and breaks. Replace if cracked or broken (para. 10-9, 10-10, or 10-11). 4. Lubricate pintle hook fittings (2) with GAA every 3,000 mi (4,827 km).	Pintle or bracket is cracked *or* broken.

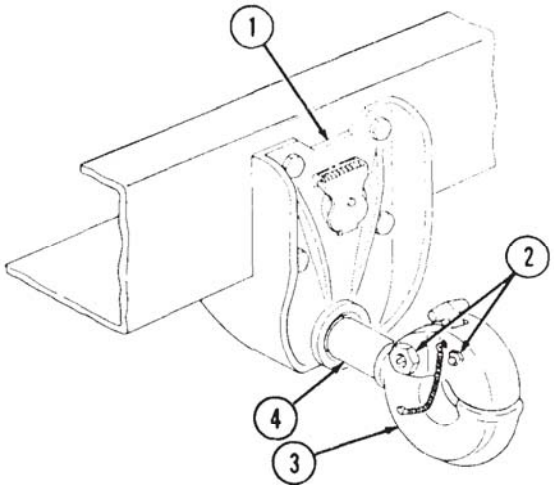

Table 2-1. Unit Level Preventive Maintenance Checks and Services (Contd).

ITEM No.	INTERVAL	ITEM TO CHECK/ SERVICE	PROCEDURE	NOT FULLY MISSION CAPABLE IF:
			VEHICLE - CAB AREA	
43	Semi-annual	Selector Levers	Monthly, or every 1,000 mi (1,609 km), lubricate hinges and latches, transfer and power takeoff shift linkage, fittings (5) on clutch and brake pedal linkage and brake pedal yoke pin (6), hand brake lever, rear control lever linkage, and dump truck tailgate bearings with seasonal grade OE/HDO. Lubricate clutch and brake pedal shaft bracket with GAA. If vehicle has not accumulated 1,000 mi (1,609 km) in a 6-month period, lubricate at time of preventive maintenance service. 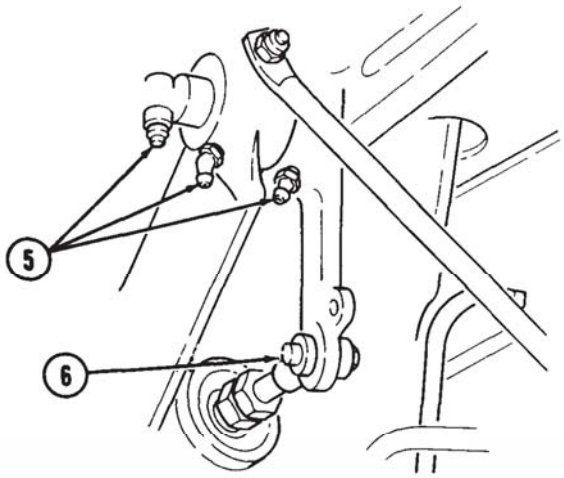	
			COMPLETE VEHICLE - ABOVE	
44	Semi-annual	Wheel	**a.** Check each tire for wear using tread depth gage. Tread depth should not be less that 1/8 in. (3.18 mm), as indicated on tire tread depth (TM 9-2610-201-14). Replace tire(s) worn beyond limit (para. 9-3). **b.** Refer to TM 9-2610-200-14 and TM 9-2610-201-14 for specific instructions for matching tires and tire rotation. **c.** Inspect all wheel studs and capnuts for secure mounting and missing parts (para. 9-3). Tighten capnuts 450-500 lb-ft (610-678 N•m), if loose.	One or more wheel studs or capnuts are missing.
45	Semi-annual	Wheel bearings	Inspect for loose condition. Adjust if loose (para. 9-6).	

Table 2-1. Unit Level Preventive Maintenance Checks and Services (Contd).

LUBRICANTS	EXPECTED TEMPERATURES		
	ABOVE 15°F (ABOVE -9°C)	+40°F TO -15°F (+4°C TO -26°C)	+4°F TO -65°F (+4°C TO -54°C)
GAA - Grease, automotive and artillery (MIL-G-10924)	All Temperatures		

'EM NO.	INTERVAL	ITEM TO CHECK/ SERVICE	PROCEDURE	NOT FULLY MISSION CAPABLE IF:
46	Semi-annual	Trunnion	Every 6 months or 3,000 mi (4,827 km), whichever occurs first, loosen screws (1) on trunnion bearing cap (2), lubricate with GAA through fitting (3) until lubricant appears around cap (2), and tighten capscrews (1). 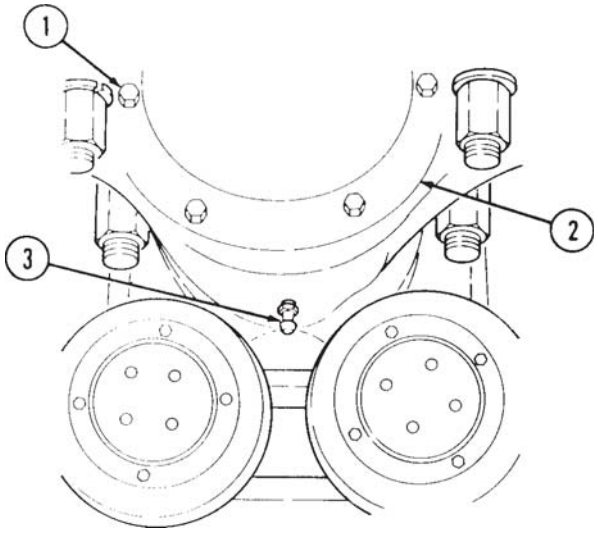	
47	Semi-annual	Van body (All)	**a.** Make a general inspection of the van body. Inspect and operate heater, air conditioner, ventilators, dome lights, and switches to ensure proper operation. **b.** Inspect electrical wiring for frays, splits, and loose terminals. Repair as necessary (para. 4-42). **c.** Lubricate fitting (5) on pawl plunger (4) with GAA.	Electrical wiring is frayed, split; terminals are loose.

Table 2-1. Unit Level Preventive Maintenance Checks and Services (Contd).

ITEM NO..	INTERVAL	ITEM TO CHECK/ SERVICE	PROCEDURE	NOT FULLY MISSION CAPABLE IF:

LUBRICANTS	EXPECTED TEMPERATURES		
	ABOVE 15°F (ABOVE -9°C)	+40°F TO -15°F (+4°C TO -26°C)	+40°F TO -65°F (+4°C TO -54°C]
GAA - Grease, automotive and artillery (MIL-G-10924)	All Temperatures		
OE/HDO - Lubricating oil, internal combustion engine (MIL-L-2104) **OEA** - Lubricating oil, internal combustion engine (arctic) (MIL-L-46167)	OE/HDO 30	OE/HDO 10	OEA

48	Semi-annual	Fifth wheel	**NOTE** Fifth wheel to be lubricated everv 1,000 mi (1.609 km). If vehicle does not accumulate 1,000 mi (1,609 km) in a 6-month period, lubricate at time of preventive maintenance service. **a.** Lubricate lock plunger shaft and latch (6) with OE/HDO. **b.** Lubricate two base plate fittings (7) with GAA. **c.** Clean then coat approach plate (8) with GAA. **d.** Lubricate two rocker shaft fittings (9) with GAA. **e.** Lubricate two lateral shaft fittings (10) with GAA. **f.** Lubricate coupler jaw pin (11) with GAA.	

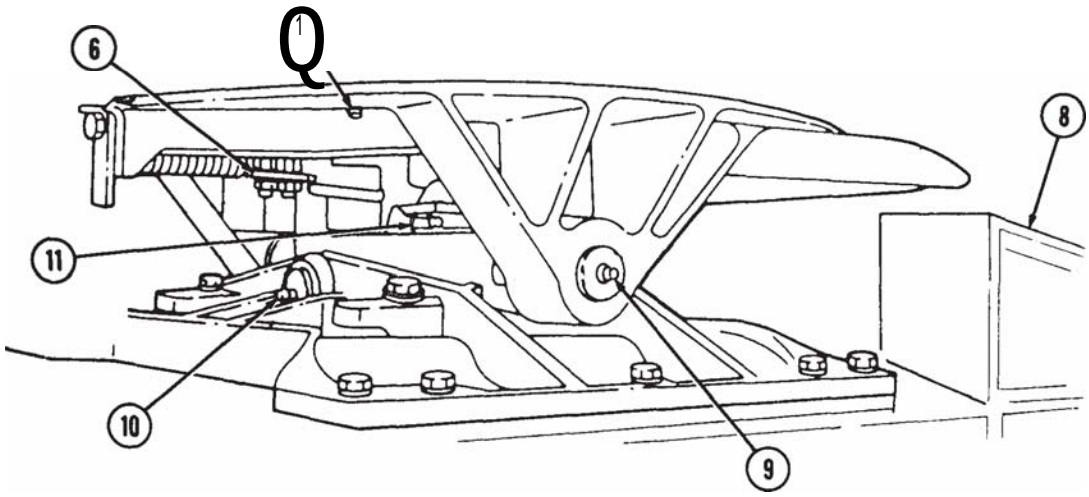

Table 2-1. Unit Level Preventive Maintenance Checks and Services (Contd).

ITEM NO.	INTERVAL	ITEM TO CHECK/ SERVICE	PROCEDURE	NOT FULLY MISSION CAPABLE IF:

LUBRICANTS	EXPECTED TEMPERATURES		
	ABOVE 15°F (ABOVE -9°C)	+40°F TO -15°F (+4°C TO -26°C)	+40°F TO -65°F (+4°C TO -54°C)
GAA - Grease, automotive and artillery (MIL-G-10924)	All Temperatures		
OE/HDO - Lubricating oil, internal combustion engine (MIL-L-2104) **OEA -** Lubricating oil, internal combustion engine (arctic) (MIL-L-46167)	OE/HDO 30	OE/HDO 10	OEA
GO - Lubricating oil, gear multi-purpose (MIL-L-2105)	GO 80/90	GO 80/90	Go 75

	Semi-annual	Front winch All)	**a.** Test drag brake for proper operation. Adjust drag brake if necessary (para. 13-4). **b.** Test winch automatic brake for proper operation. Adjust or replace automatic brake if necessary (para. 13-3). **c.** Unwind winch cable completely and inspect for kinks, frays, and wear. Replace if damaged (para. 13-5). **d.** Lubricate level wind trolley wheels (1), level wind sheave bearing (2), vertical cable rollers (12), horizontal cable rollers (13), and tensioner sheave pins (14) with GAA every 3,000 mi (4,827 km) or semiannually, whichever occurs first. If operation is frequent, or under severe conditions, service weekly. **e.** Lubricate level wind trolley lock (3), clutch lever poppet (4), drum lock (6), and tensioner control lever lock (7) with OE/HDO every 1,000 mi (1,609 km). If vehicle does not accumulate 1,000 mi (1,609 km) in a 6-month period it will be lubricated at time of preventive maintenance service. **f.** Lubricate end frame fill (5) with GO only when required by maintenance repair action, or if contaminated by water or other foreign materials. **g.** Check that end frame level (8) and gear case level (11) is full with GO lubricant.	Winch cable is kinked, frayed, or worn.

Table 2-1. Unit Level Preventive Maintenance Checks and Services (Contd).

ITEM NO.	INTERVAL	ITEM TO CHECK/ SERVKE	PROCEDURE	NOT FULLY MISSION CAPABLE IF:
49	Semi-annual	Front winch (All) (Contd)	**h.** Change gear lubricant at end frame drain (7), gear case drain (13), and gear case fill (15) with GO only when required by maintenance repair action, or if contaminated by water or other foreign material. Drain only after operation when hot. Place vehicle in level position. Remove drain and filler plugs from case, and after draining reinstall drain plugs. Fill gear cases to plug openings at all times, and install filler plugs. Clean venta after operation in mud and water.	

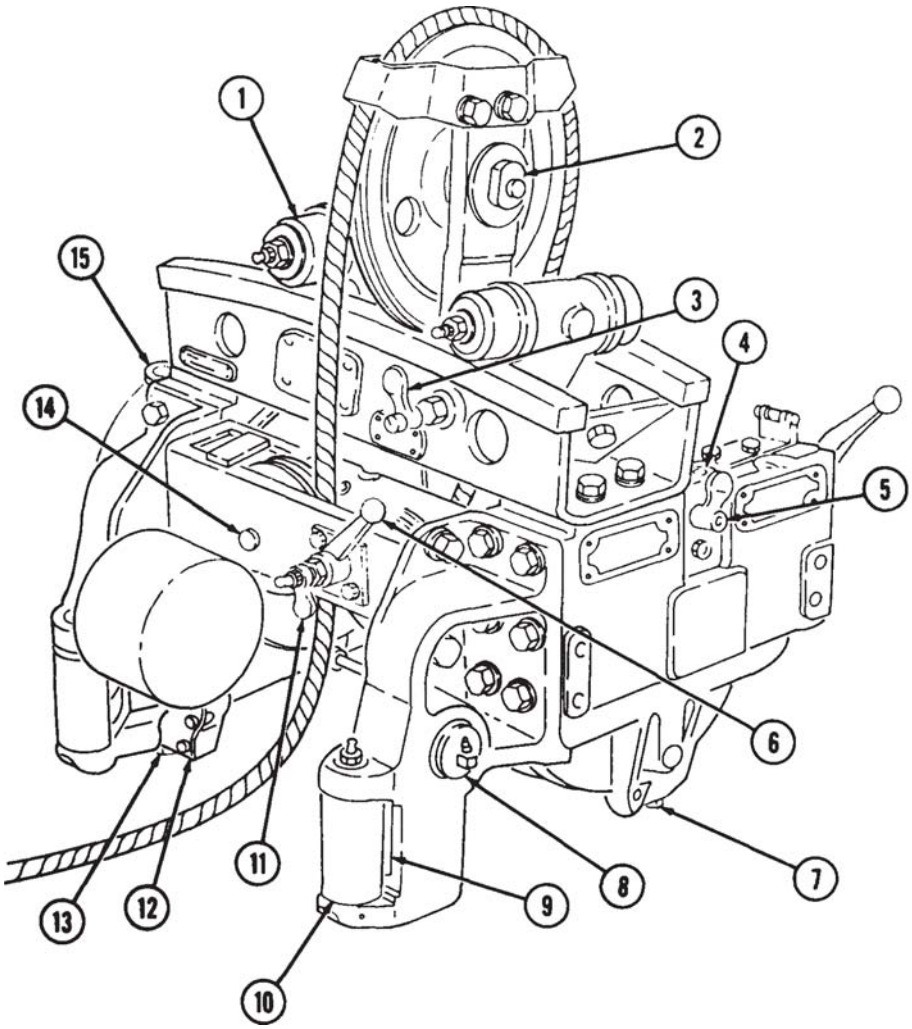

Table 2-1. Unit Level Preventive Maintenance Checks and Services (Contd).

ITEM NO.	INTERVAL	ITEM TO CHECK/ SERVICE	PROCEDURE	NOT FULLY MISSION CAPABLE IF:

LUBRICANTS	EXPECTED TEMPERATURES		
	ABOVE 15°F (ABOVE -9°C)	+40°F TO -15°F (+4°C TO -26°C)	+40°F TO -65°F (+4°C TO -54°C)
OE/HDO - Lubricating oil, internal combustion engine (MIL-L-2104) **OEA** - Lubricating oil, internal combustion engine (arctic) (MIL-L-46167)	OE/HDO 30	OE/HDO 10	OEA
GO - Lubricating oil, gear multi-purpose (MIL-L-21O.5)	GO 80/90	GO 80/90	GO 75

50	Semi-annual	Midship winch (M815)	**a.** Inspect midship winch for tight mounting and broken or missing parts. Tighten loose parts. Repair or replace missing or damaged parts as necessary (para. 13-12). **b.** Check drive chain (1) for proper tension and damage. To check and adjust tension, using a straight edge as a gage, measure 7/16-9/16 in (1.1- 1.4 cm) deflection at upper midpoint of drive chain (1). If deflection is not correct, record measurement and adjust drive chain (1). 1. Loosen two locknuts (3) on sleeve bearing (2). 2. Slide sleeve bearing (2) right or left in slotted holes on support bracket (4) to tighten or loosen drive chain (1). 3. Repeat steps 1 and 2. 4. Tighten two locknuts (3) when proper deflection is obtained. Replace drive chain (1) if damaged (para. 13-13).	

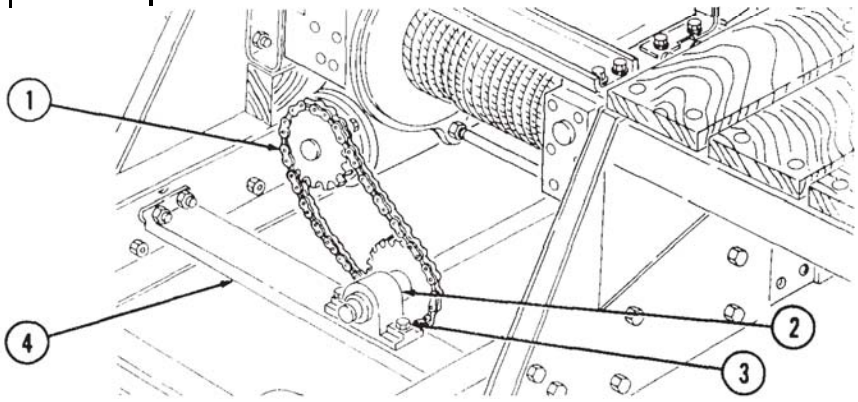

Table 2-1. Unit Level Preventive Maintenance Checks and Services (Contd).

ITEM NO.	INTERVAL	ITEM TO CHECK/ SERVICE	PROCEDURE	NOT FULLY MISSION CAPABLE IF:
50	Semi-annual	Midship winch (M815) (Contd)	**c.** Test drag and automatic. brake for proper operation. Adjust if necessary (para. 13-3 or 13-4). **d.** Lubricate gear case fill (5), end frame drain (9), and gear case drain (10) with GO. Change gear lubricant only when required by maintenance repair action, or if contaminated by water or other foreign material. Drain only after operation when hot. Place vehicle in level position. Remove drain and tiller plugs from case, and after draining reinstall drain plugs. Fill gear cases to plug openings at all times, and install filler plugs. Clean vents after operation in mud or water. **e.** Check end frame level (8) and gear case level (11) every 3,000 mi (4,827 km) or semiannually. If low, fill with GO. **f.** Change end frame fill (6) with GO only when required by maintenance repair action, or if contaminated by water or other foreign materials. **g.** Lubricate clutch lever poppet (7) with OE/HDO every 1,000 mi (1,609 km). If vehicle does not accumulate 1,000 mi (1,609 km) in a 6-month period, lubricate at time of preventive maintenance service.	

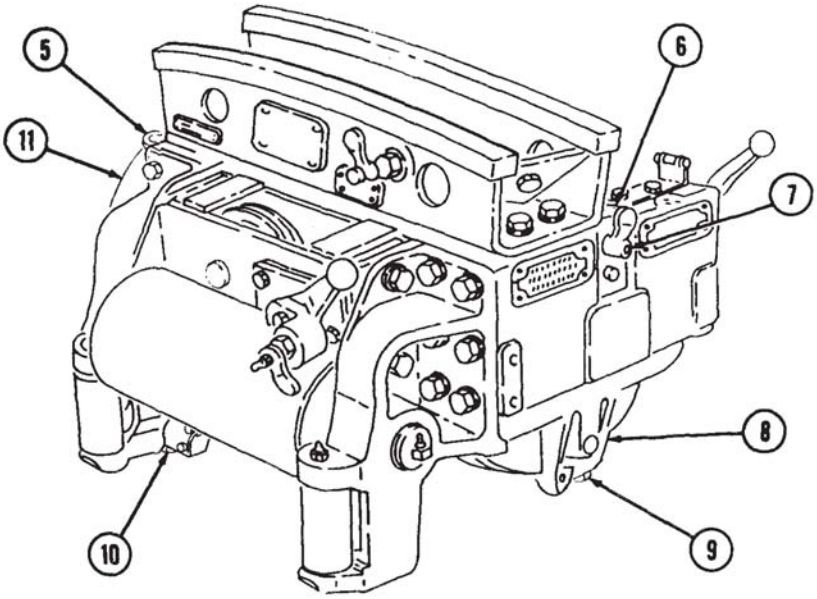

Table 2-1. Unit Level Preventive Maintenance Checks and Services (Contd).

ITEM NO.	INTERVAL	ITEM TO CHECK/ SERVICE	PROCEDURE	NOT FULLY MISSION CAPABLE IF:

LUBRICANTS	EXPECTED TEMPERATURES			
	ABOVE 15°F (ABOVE -9°C)	+40°F TO -15°F (+4°C TO -26°C)	+40°F TO -65°F [+4°C TO -54°C)	
GAA - Grease, automotive and artillery (MIL-G-10924)	All Temperatures			
CW - Lubricating oil, chain wire rope, exposed gear (VV-L-751)	ABOVE +80° F (+27°C)	+80° TO +30°F (+27° TO -1°C)	+30° TO -30°F (-1° TO -34°C)	-30° TO -65°F (-34° TO -54°C)
Winch wire rope	CW-IIC	CW-IIB	CW-IIA	GO 75

50	Semi-annual	Midship winch (M815) (Contd)	**h.** Lubricate universal joint fitting (1) with GAA every 3,000 mi (4,827 km) or 3 months, whichever occurs first. Lubricate using low pressure gun. If operating conditions are severe or abnormal, service at 1,000 mi (1,609 km). **i.** Lubricate drive chain (2) coating lightly with CW every 3,000 mi (4,827 km) or semiannually, whichever occurs first. If operation is frequent, or under severe conditions, service weekly. **j.** Lubricate pillow block (3) and pillow block sleeve (4) with GAA every 3,000 mi (4,827 km) or semiannually, whichever occurs first. If operation is frequent, or under severe conditions, service weekly.	

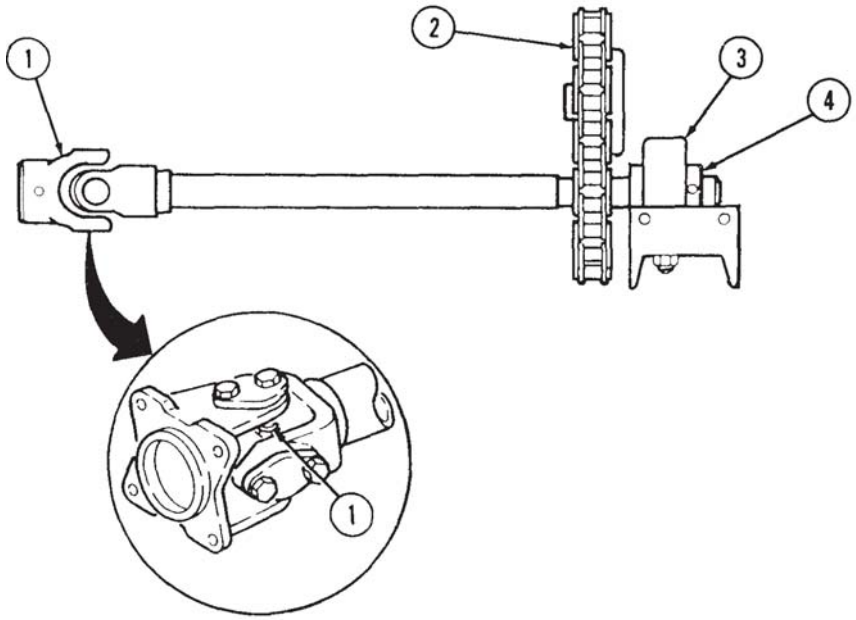

Table 2-1. Unit Level Preventive Maintenance Checks and Services (Contd).

ITEM NO.	INTERVAL	ITEM TO CHECK/ SERVICE	PROCEDURE	NOT FULLY MISSION CAPABLE IF:

LUBRICANTS	EXPECTED TEMPERATURES		
	ABOVE 15°F (ABOVE -9°C)	+40°F TO -15°F (+4°C TO -26°C)	+40°F TO -65°F (+4°C TO -54°C)
GAA - Grease, automotive and artillery (MIL-G-10924)		All Temperatures	
OE/HDO - Lubricating oil, internal combustion engine (MIL-L-2104) **OEA** - Lubricating oil, internal combustion engine (arctic) (MIL-L-46167)	OE/HDO 30	OE/HDO 10	OEA

51	Semi-annual	Rear winch (M816)	**a.** Test winch automatic brake for proper operation. Adjust automatic brake, if necessary (para. 13-3). **b.** Unwind winch cable (9) completely and inspect for kinks, frays, and wear. Replace if damaged (para. 13-5). **c.** Lubricate level wind sheave bearing, sheave frame pin bearing, end frame bering, and fittings on level wind trolley wheels (6) and level wind frame (5) with GAA every 3,000 mi (4,827 km) or semiannually, whichever occurs first. If operation is frequent, or under severe conditions, service weekly. **d.** Lubricate fittings level wind trolley lock (7) and tensioner rocket level pins (8) with OE/HDO every 1,000 mi (1,609 km). If vehicle does not accumulate 1,000 mi (1,609 km) in a 6-month period, lubricate at time of preventive maintenance service.	Winch cable is kinked, frayed or worn.

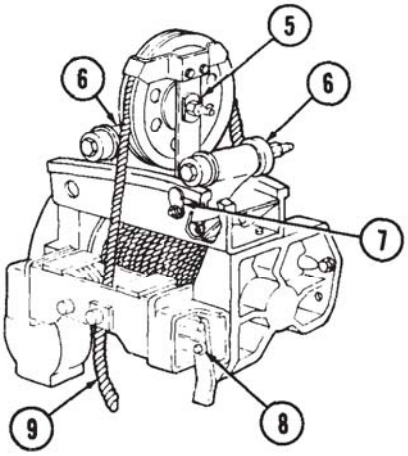

Table 2-1. Unit Level Preventive Maintenance Checks and Services (Contd).

ITEM NO.	INTERVAL	ITEM TO CHECK/ SERVICE	PROCEDURE	NOT FULLY MISSION CAPABLE IF:

LUBRICANTS	EXPECTED TEMPERATURES		
	ABOVE 15°F (ABOVE -9°C)	+40°F TO -15°F (+4°C TO -26°C)	+40°F TO -65°F (+4°C TO -54°C)
GAA - Grease, automotive and artillery (MIL-G-10924)	All Temperatures		
GO - Lubricating oil, gear multi-purpose (MIL-L-2105)	GO 80/90	GO 80/90	GO 75

51	Semi-annual	Rear winch (M816) (Contd)	**e.** Lubricate tensioner sheave pins (2) with GAA every 1,000 mi (1,609 km). If vehicle does not accumulate 1,000 mi (1,609 km) in a 6-month period, lubricate at time of preventive maintenance service. **f.** Drain and refill gear case drain (4) and gear case fill (1) with GO lubricant only when required by maintenance repair action, or if contaminated by water or other foreign material. Drain only after operation when hot. Place vehicle in level position. Remove drain and filler plugs. Fill gear case to plug opening at all times, and install filler plug. Clean vents after operation in mud and water. **g.** Check gear case level (3) weekly, as required, depending upon use, otherwise every 3,000 mi (4,827 km) or 3 months, whichever occurs first. If lubricant is low, refill with GO. 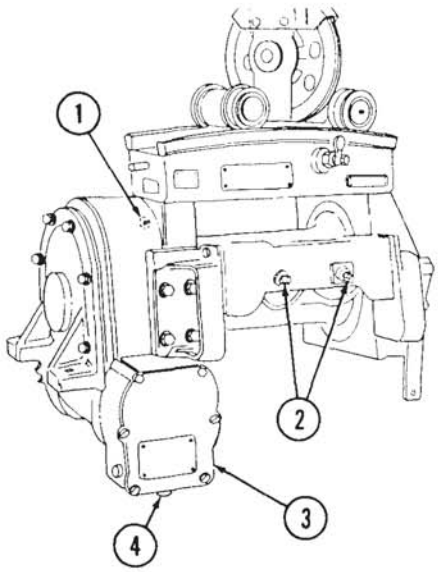	

Table 2-1. Unit Level Preventive Maintenance Checks and Services (Contd).

ITEM NO.	INTERVAL	ITEM TO CHECK/ SERVICE •	PROCEDURE	NOT FULLY MISSION CAPABLE IF:

LUBRICANTS	EXPECTED TEMPERATURES		
	ABOVE 15°F (ABOVE -9°C)	+40°F TO -15°F (+4°C TO -26°C)	+40°F TO -65°F (+4°C TO -54°C)
GAA - Grease, automotive and artillery (MIL-G-10924)	All Temperatures		

52	Semi-annual	Wrecker body (M816) cable guide rollers	Lubricate fittings at upper cable guide roller (5), vertical cable guide roller (6), and lower cable guide roller (7) with GAA every 3,000 mi (4,827 km) or semi-annually, whichever occurs first. If operation is frequent, or under severe conditions, service weekly.	

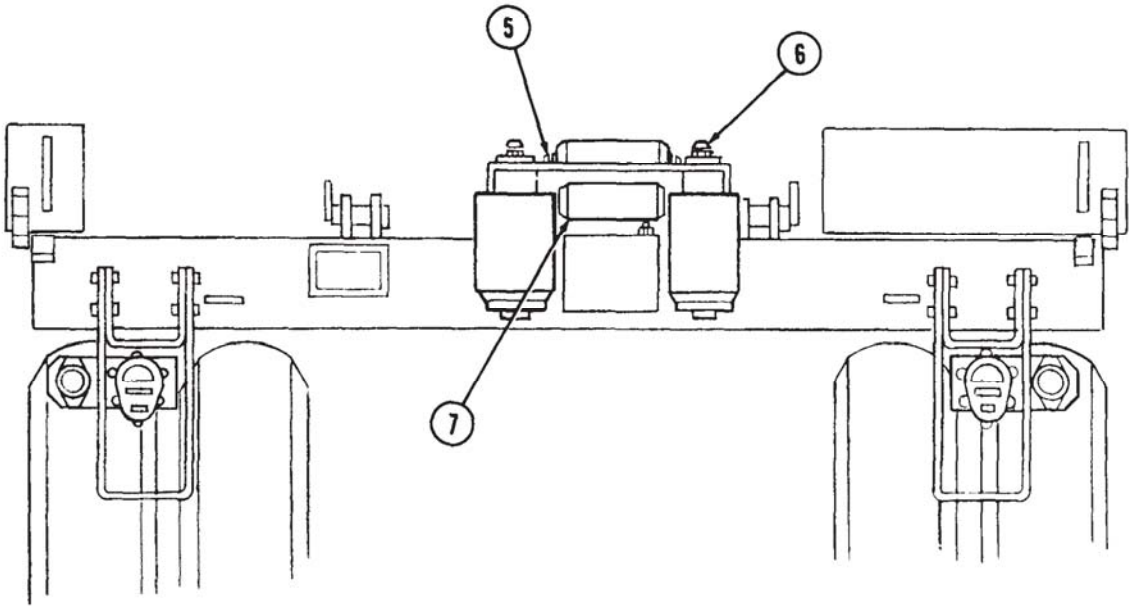

Table 2-1. Unit Level Preventive Maintenance Checks and Services (Contd).

ITEM NO.	INTERVAL	ITEM TO CHECK/ SERVICE	PROCEDURE	NOT FULLY MISSION CAPABLE IF:

LUBRICANTS	EXPECTED TEMPERATURES		
	ABOVE 15°F (ABOVE -9°C)	+40°F TO -15°F (+4°C TO -26°C)	+40°F TO -65°F (+4°C TO -54°C)
GAA - Grease, automotive and artillery (MIL-G-10924)	All Temperatures		
GO - Lubricating oil, gear multi-purpose (MIL-L-2105)	GO 80/90	GO 80/90	GO 75

53	Semi-annual	Wrecker crane (M816)	**a.** Check GO lubricant levels at swinger gear case fill and level (2), seal case fill and level (4), seal case and bevel gear box fill and lever (6) every 3,000 mi (4,827 km) or semiannually, whichever occurs first. **b.** Change GO gear lubricant at swinger gear case drain (3), seal case drain (5), and seal case and bevel gear box drain (7) only when required by maintenance repair action, or if contaminated by water or other foreign material. Drain only after operation when hot. Place vehicle in level position. Remove drain and filler plugs from case, and after draining reinstall drain plugs. Fill to plug openings at all times, and install filler plugs. Clean vents after operation in mud or water. **c.** Lubricate turntable bearing (1) with GAA semi-annually (6-months). Rotate full range of travel when lubricating.	

Table 2-1. Unit Level Preventive Maintenance Checks and Services (Contd).

ITEM NO.	INTERVAL	ITEM TO CHECK/ SERVICE	PROCEDURE	NOT FULLY MISSION CAPABLE IF:
53	Semi-annual	Wrecker crane (M816) (Contd)		

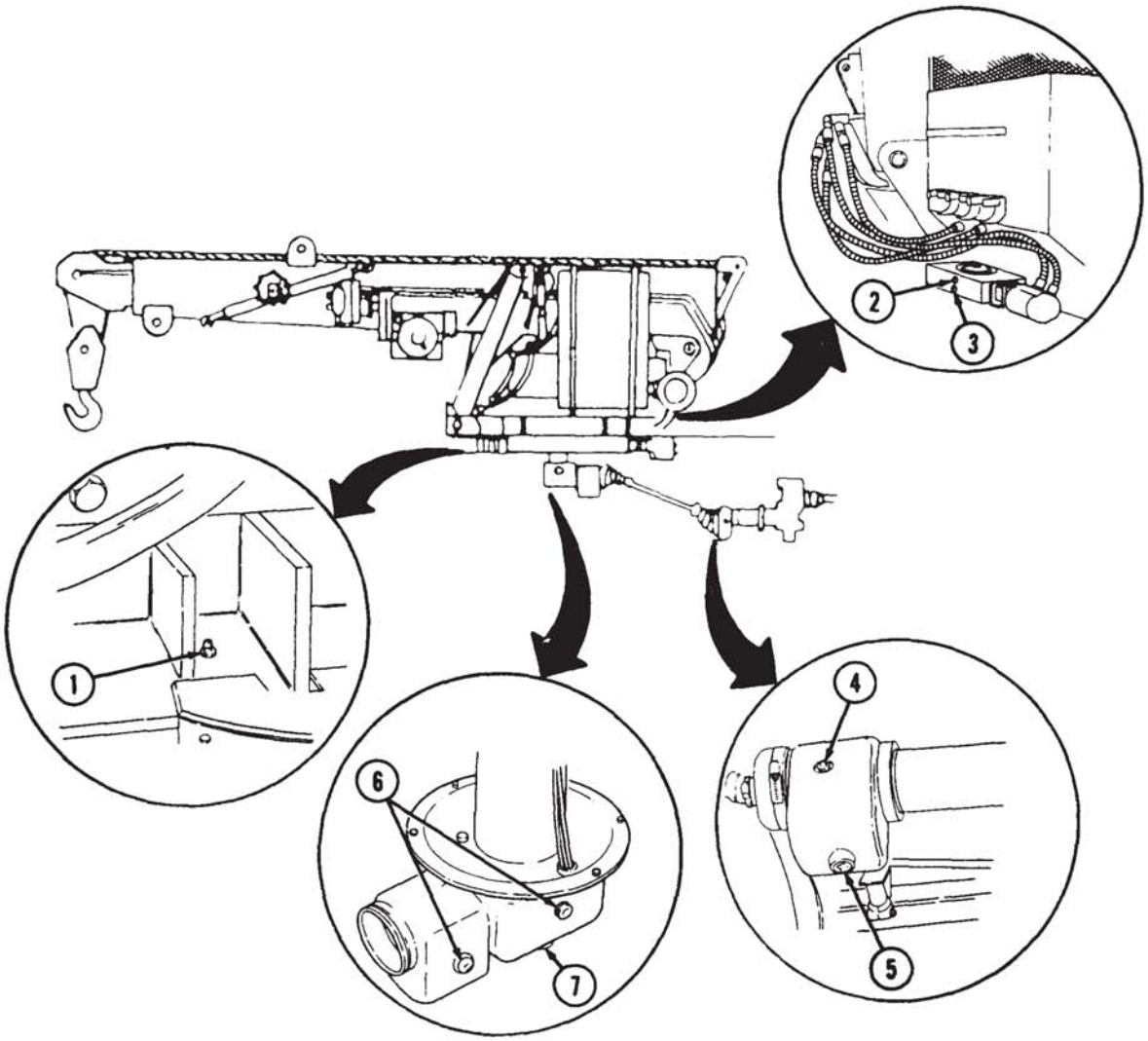

Table 2-1. Unit Level Preventive Maintenance Checks and Services (Contd).

ITEM NO.	INTERVAL	ITEM TO CHECK/ SERVICE	PROCEDURE	NOT FULLY MISSION CAPABLE IF:

LUBRICANTS	EXPECTED TEMPERATURES		
	ABOVE 15°F (ABOVE -9°C)	+40°F TO -15°F (+4°C TO -26°C)	+40°F TO -65°F (+4°C TO -54°C)
GAA - Grease, automotive and artillery (MIL-G-10924)	All Temperatures		
GO - Lubricating oil, gear multi-purpose (MIL-L-2105)	GO 80/90	GO 80/90	GO 75

53	Semi-annual	Wrecker crane (M816) (Contd)	**d.** Lubricate two cable guide rollers (6) and winch drum shaft bearings (5) with GAA every 3,000 mi (4,827 km) or semiannually, whichever occurs first. If operation is frequent, or under severe conditions, service weekly. Elevating cylinder bushings (1) need to be lubricated semiannually. **e.** Check hoist gear case fill (2) and hoist winch (3) levels every 3,000 mi (4,827 km) or semiannually, whichever occurs first. Change GO gear lubricant only when required by maintenance repair action, or if contaminated by water or other foreign material. Weekly, with boom in horizontal position, remove level plug from winch worm gear case; if level is below level plug hole, replenish to bottom of hole. **f.** Drain and refill to plug level with GO lubricant to hoist gear case drain (7), and hoist winch drain (4) only when required by maintenance repair action or if contaminated by water or other material. Weekly, with boom in horizontal position, remove level plug from winch worm gear case and winch input drive reduction gear case; if level is below level plug hole, replenish to bottom of hole.	

Table 2-1. Unit Level Preventive Maintenance Checks and Services (Contd).

ITEM NO.	INTERVAL	ITEM TO CHECK/ SERVICE	PROCEDURE	NOT FULLY MISSION CAPABLE IF:
53	Semi-annual	Wrecker crane (M816) (Contd)		

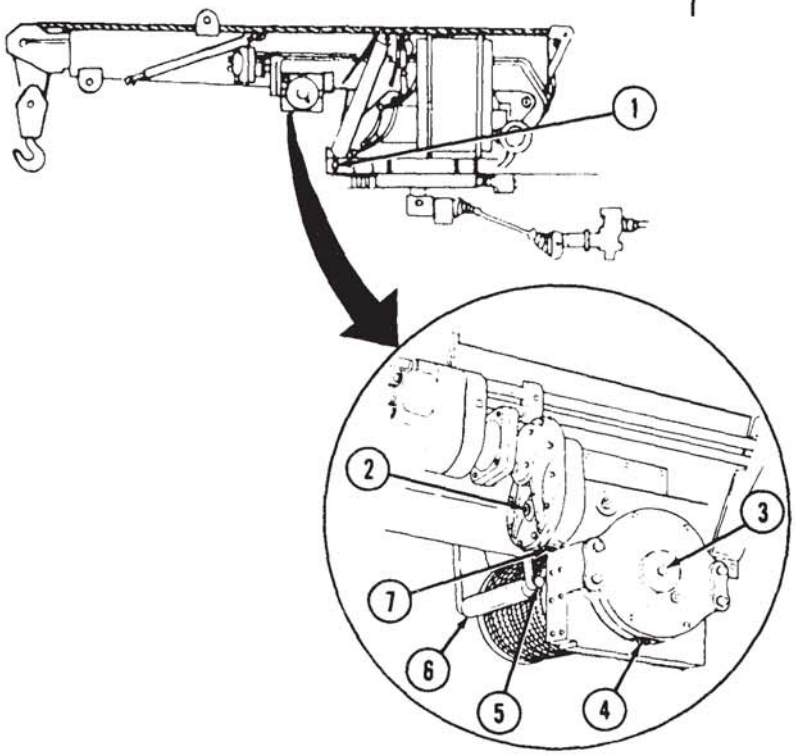

g. Lubricate two hoist cable sheaves (8) and boom hinge pin (9) with GAA every 3,000 mi (4,827 km) or semi-annually, whichever occurs first. If operation is frequent, or under severe conditions, service weekly.

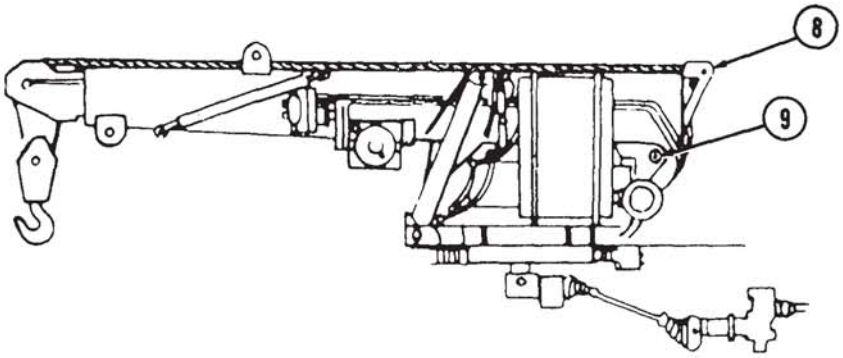

Table 2-1. Unit Level Preventive Maintenance Checks and Services (Contd).

ITEM NO.	INTERVAL	ITEM TO CHECK/ SERVICE	PROCEDURE	NOT FULLY MISSION CAPABLE IF:

LUBRICANTS	EXPECTED TEMPERATURES		
	ABOVE 15°F (ABOVE -9°C)	+40°F TO -15°F (+4°C TO -26°C)	+40°F TO -65°F (+4°C TO -54°C)
GAA - Grease, automotive and artillery (MIL-G-10924)	All Temperatures		

53	Semi-annual	Wrecker crane (M816) (Contd)	**h.** Lubricate boom roller shaft (2), turntable gear (1), block sheave pin (4), and boom sheave pin (3) with GAA every 3,000 mi (4,827 km) or semiannually, whichever occurs first. If operation is frequent, or under severe conditions, service weekly. **i.** Lubricate block hook (5) with GAA every 1,000 mi (1,609 km). If vehicle does not accumulate 1,000 mi (1,609 km) in a 6-month period, lubricate at time of preventive maintenance service.	

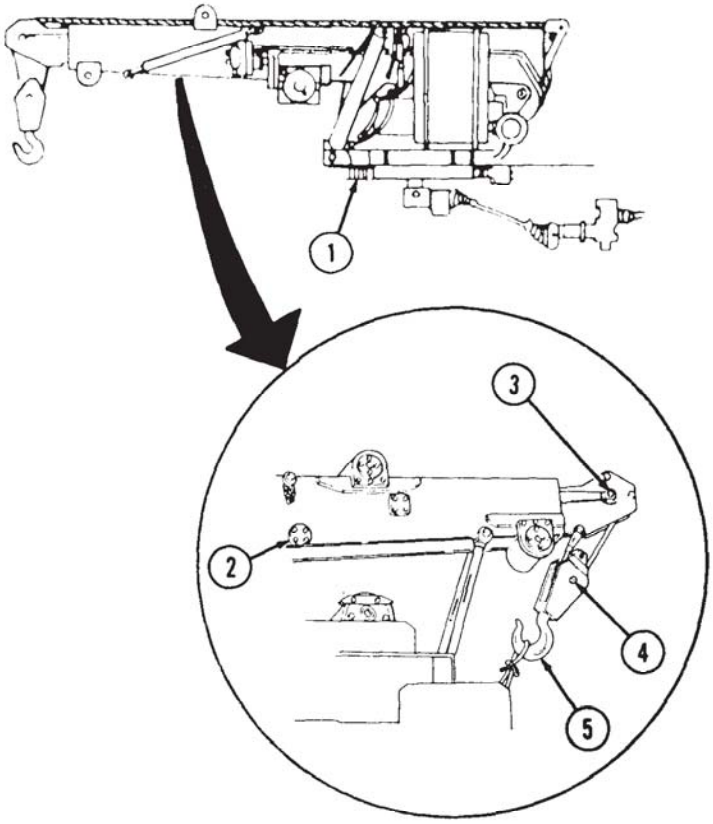

Table 2-1. Unit Level Preventive Maintenance Checks and Services (Contd).

ITEM NO.	INTERVAL	ITEM TO CHECK/ SERVICE	PROCEDURE	NOT FULLY MISSION CAPABLE IF:

LUBRICANTS	EXPECTED TEMPERATURES		
	ABOVE 15°F (ABOVE -9°C)	+40°F TO -15°F (+4°C TO -26°C)	+40°F TO -65°F (+4°C TO -54°C)
GAA - Grease, automotive and artillery (MIL-G-10924)	All Temperatures		

54	Semi-annual	Dump body and hoist (M817)	**NOTE** If pressure fittings are required, refer to TM 9-2320-260-34P-1 for specific types. **a.** Lubricate universals and slip joints (6) with GAA every 3,000 mi (4,827 km) or 3 months, whichever occurs first. On universals equipped with plugs, remove filler plugs and install pressure fittings; lubricate using low pressure lubrication gun. If operating conditions are severe or abnormal, service at 1,000 mi (1,609 km). **b.** Lubricate trunnion pins (7), lifting arm (9), cylinder crosshead (10), body hinge pins (11), and three fittings on lifting arm rollers (8) with GAA every 3,000 mi (4,827 km) or semiannually, whichever occurs first. If operation is frequent, or under severe conditions, service weekly.	

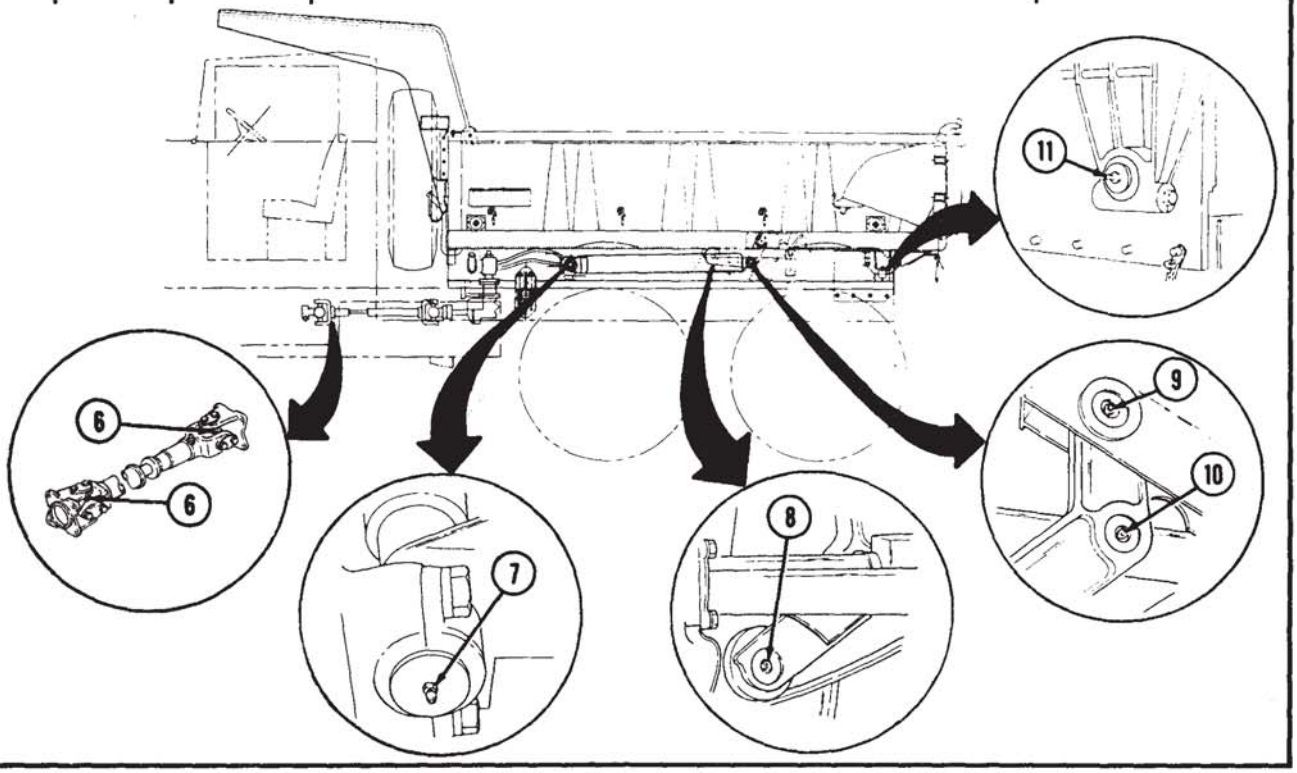

Table 2-1. Unit Level Preventive Maintenance Checks and Services (Contd).

ITEM NO.	INTERVAL	ITEM TO CHECK/ SERVICE	PROCEDURE	NOT FULLY MISSION CAPABLE IF:

LUBRICANTS	EXPECTED TEMPERATURES		
	ABOVE 15°F (ABOVE -9°C)	+40°F TO -15°F (+4°C TO -26°C)	+40°F TO -65°F (+4°C TO -54°C)
GAA - Grease, automotive and artillery (MIL-G-10924)	All Temperatures		

55	Semi-annual	Hydraulic crane (M819)	**a.** Lubricate drive pinion (1), idler gear (2), two pivot post upper bearings (3), and pivot post lower bearing (4), with GAA every 3,000 mi (4,827 km) or semiannually, whichever occurs first. If operation is frequent, or under severe conditions, service weekly. **NOTE** If pressure fittings are required, refer to TM 9-2320-260-20P for specific types. **b.** Remove pivot post drain plugs on underside of crane base plate. Remove two pipe plugs on each side of pivot post gear shield and install lubrication fittings. Lubricate ring gear (5) with GAA through fittings until lubricant appears at underside of pivot post drain holes. Install pivot post drain plugs, remove fittings, and install pipe plugs.	

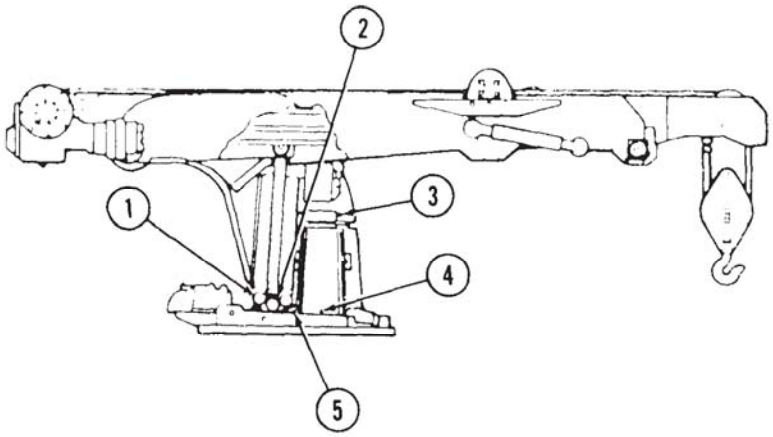

Table 2-1. Unit Level Preventive Maintenance Checks and Services (Contd).

ITEM NO.	INTERVAL	ITEM TO CHECK/ SERVICE	PROCEDURE	NOT FULLY MISSION CAPABLE IF:

LUBRICANTS	EXPECTED TEMPERATURES		
	ABOVE 15°F (ABOVE -9°C)	+40°F TO -15°F (+4°C TO -26°C)	+40°F TO -65°F (+4°C TO -54°C)
GAA - Grease, automotive and artillery (MIL-G-10924)	All Temperatures		
OE/HDO - Lubricating oil, internal combustion engine (MIL-L-2104) **OEA** - Lubricating oil, internal combustion engine (arctic) (MIL-L-46167)	OE/HDO 10	OE/HDO 10	OEA

55	Semi-annual	Hydraulic crane (M819) (Contd)	**c.** Lubricate upper roller (6), sheave pin (7), block sheave pin (8), front lower roller (10), and eccentric lower roller (11) with GAA every 3,000 mi (4,827 km) or semi-annually, whichever occurs first. If operation is frequent, or under severe conditions, service weekly. **d.** Lubricate hook swivel (9) with OE/HDO every 3,000 mi (4,827 km) or semiannually, whichever occurs first. If operation is frequent, or under severe conditions, service weekly.	

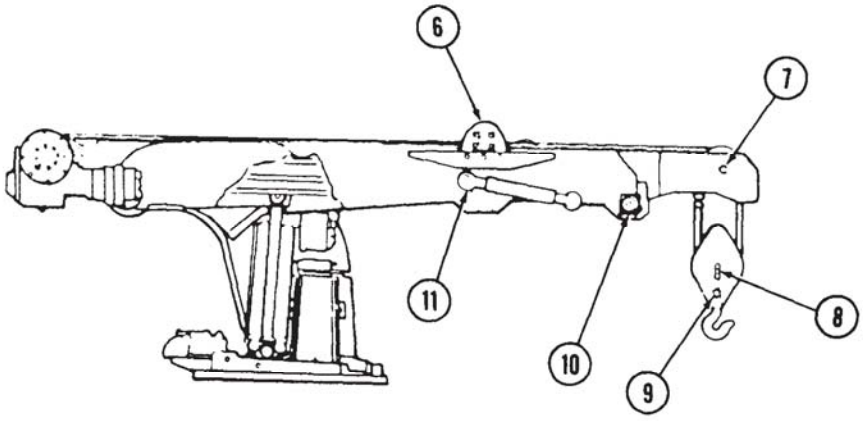

Table 2-1. Unit Level Preventive Maintenance Checks and Services (Contd).

ITEM NO.	INTERVAL	ITEM TO CHECK/ SERVICE	PROCEDURE	NOT FULLY MISSION CAPABLE IF:

LUBRICANTS	EXPECTED TEMPERATURES		
	ABOVE 15°F (ABOVE -9°C)	+40°F TO -15°F (+4°C TO -26°C)	+40°F TO -65°F (+4°C TO -54°C)
GAA - Grease, automotive and artillery (MIL-G-10924)	All Temperatures		
OE/HDO - Lubricating oil, internal combustion engine (MIL-L-2104) **OEA** - Lubricating oil, internal combustion engine (arctic) (MIL-L-46167)	OE/HDO 10	OE/HDO 10	OEA
GO - Lubricating oil, gear multi-purpose (MIL-L-2105)	GO 80/90	GO 80/90	GO 75

55	Semi-annual	Hydraulic crane (M819) (Contd)	**e.** Check level of OE/HDO lubricant in hydraulic oil tank fill and level (9) weekly, as required, depending upon use; otherwise, every 3,000 mi (4,827 km) or semi-annually, whichever occurs first. If vehicle does not accumulate 1,000 mi (1,609 km) in a 6-month period, lubricate at time of preventive maintenance service. **f.** Coat camrollers (5) sparingly and lubricate drive pinion shaft (6) with GAA every 3,000 mi (4,827 km) or 3 months, whichever occurs first. **g.** Check swing motor gear housing level (7) weekly, as required, depending upon use, otherwise, every 3,000 mi (4,827 km) or 3 months, whichever occurs first. **h.** Drain swing motor gear housing drain (8) and refill with GO only when required by maintenance repair action, or if contaminated by water or other foreign material. **i.** Lubricate drum shaft (1), shipper pivot shaft (11), swing motor base pin (4), and three fittings at boom lift pivot pin (3) with GAA every 3,000 mi (4,827 km) or 3 months, whichever occurs first. **j.** Check hoist drum level (12) weekly, as required, depending on use; otherwise, every 3,000 mi (4,827 km) or 3 months, whichever occurs first.	

Table 2-1. Unit Level Preventive Maintenance Checks and Services (Contd).

ITEM NO.	INTERVAL	ITEM TO CHECK/ SERVICE	PROCEDURE	NOT FULLY MISSION CAPABLE IF:
55	Semi-annual	Hydraulic crane (M819) (Contd)	**k.** Drain and refill hoist drum drain (10) with GO only when required by maintenance repair action, or if contaminated by water or other foreign material. Drain only after operation when hot. Place vehicle in level position. Remove drain and filler plug from case, and after draining reinstall plugs. Fill gear case to plug opening at all times, and install filler plug. Clean vents after operation in mud and water. **l.** Check hoist drum fill level (2) weekly, drain only when required by maintenance repair action, or if contaminated by water or other foreign material. Set boom in horizontal position and remove drain plug from case. Remove breather and level plug; fill hoist drum fill (2) to level of plug hole. Install drain plug. Clean and install breather and level plug.	

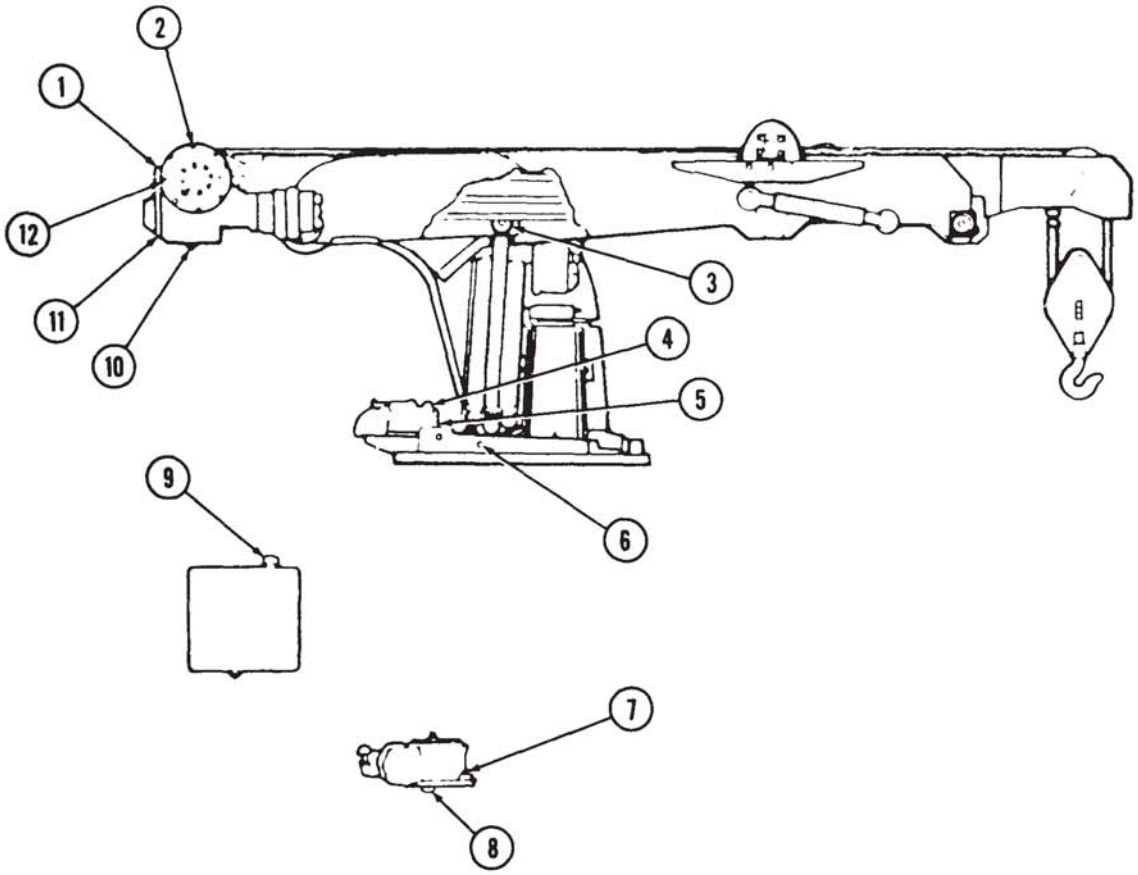

Table 2-1. Unit Level Preventive Maintenance Checks and Services (Contd).

ITEM NO.	INTERVAL	ITEM TO CHECK/ SERVICE	PROCEDURE	NOT FULLY MISSION CAPABLE IF:

LUBRICANTS	EXPECTED TEMPERATURES		
	ABOVE 15°F (ABOVE -9°C)	+40°F TO -15°F (+4°C TO -26°C)	+40°F TO -65°F (+4°C TO -54°C)
GAA - Grease, automotive and artillery (MIL-G-10924)	All Temperatures		

56	Semi-annual	Expansible van body (M820, M820A1, M820A2)	Lubricate pawl plunger (1) with GAA semiannually.	

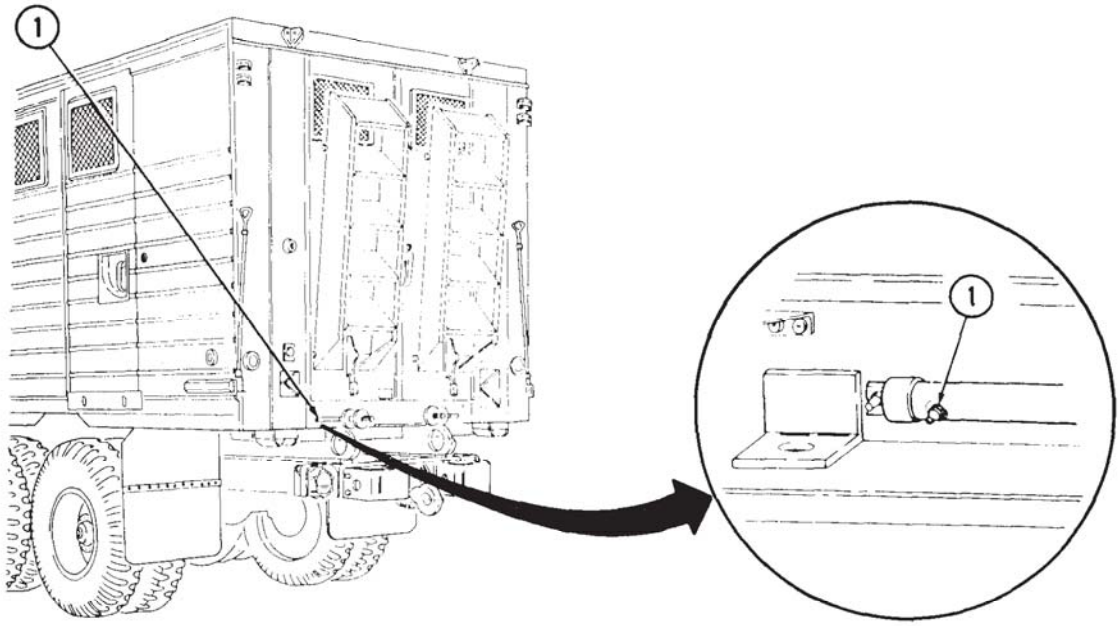

57	Semi-annual	Expansible van with liftgate (M820A2)	Lubricate elevating cylinder pivot pin (3), two fittings at center bearing assembly (6), inner clutch (7), two lift frame bearings (2), elevating hand lever shaft (4), and four radius rod pivot pins (5) with GAA every 3,000 mi (4,827 km) or semiannually, whichever occurs first. If operation is frequent, or under severe conditions, service weekly.	

Table 2-1. Unit Level Preventive Maintenance Checks and Services (Contd).

ITEM NO.	INTERVAL	ITEM TO CHECK/ SERVICE	PROCEDURE	NOT FULLY MISSION CAPABLE IF:
57	Semi-annual	Expansible van with liftgate (M820A2) (Contd)		

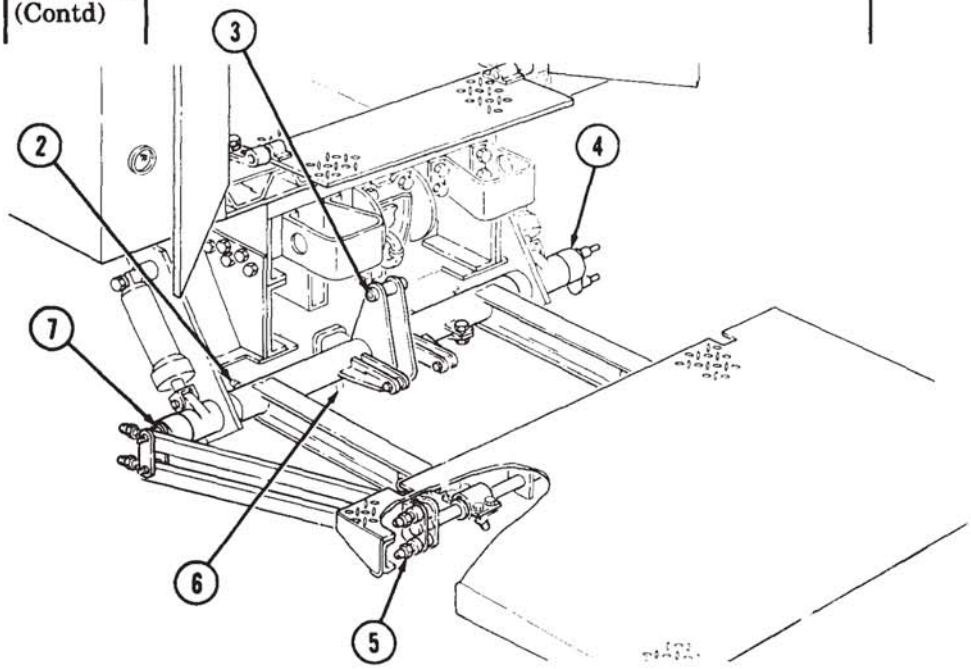

58	Semi-annual	Bridge transporting body (M821)	Lubricate roller bearings (9) and support roller pins (8) with GAA every 3,000 mi (4,827 km) or 3 months, whichever occurs first.	

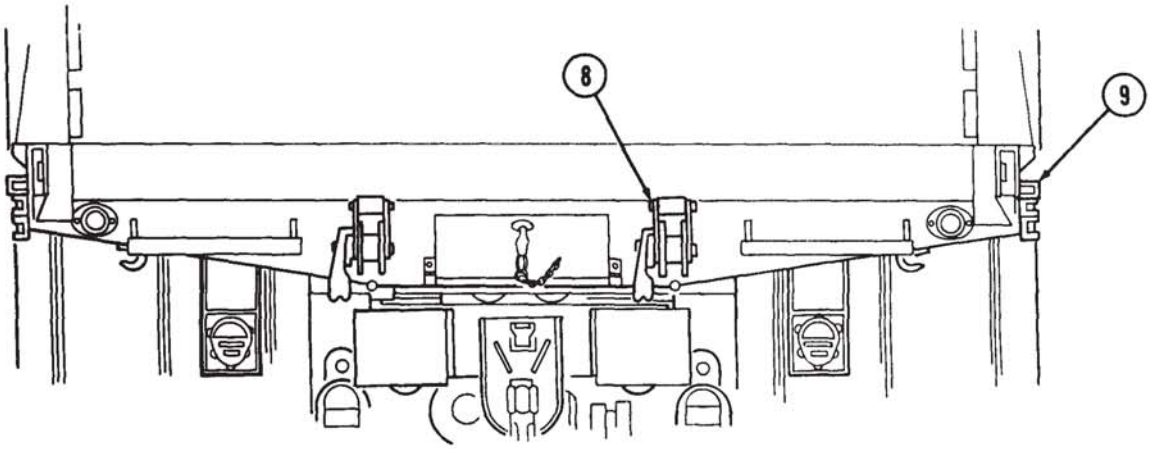

Table 2-1. Unit Level Preventive Maintenance Checks and Services (Contd).

ITEM NO.	INTERVAL	ITEM TO CHECK/ SERVICE	PROCEDURE	NOT FULLY MISSION CAPABLE IF:
			NOTE Perform all semiannual inspections in addition to annual inspections at the time of the annual inspection. **ENGINE COMPARTMENT**	
59	Annual	Starter and starter wiring	**a.** Inspect three starter mounting screws (1) for security. Tighten 100-110 lb-ft (136-149 N•m) if loose. **b.** Inspect starter wiring for loose and corroded connections. Clean if corrosion is present. Tighten if loose (para. 4-5). 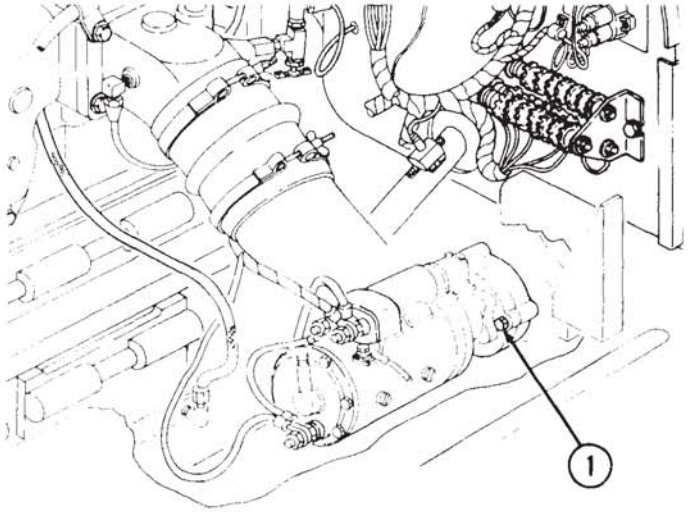 	Starter wiring is loose.
			NOTE Numbers in brackets refer to items found in Mandatory Replacement Parts List (page 2-65).	
60	Annual	Protective control box	Inspect protective control box (2) for secure mounting. If loose, tighten by performing the following steps: **a.** Disconnect harness (5) from control box (2). **b.** Remove screw (8), lockwasher (7) [1], ground lead (6), and lockwasher (9) [2] from control box (2). Discard lockwashers (7) [1] and (9) [2]. **c.** Remove three screws (10), lockwashers (11) [2], and control box (2) from mounting bracket (4). Discard lockwashers (11) [2]. **d.** Tighten mounting bracket screws (3). **e.** Install control box (2) on mounting bracket (4) with three new lockwashers (11) [2] and screws (10). **f.** Install new lockwasher (9) [1], ground lead (6), new lockwasher (7) [2], and screw (8) on control box (2). **g.** Connect harness (5) to control box (2).	

Table 2-1. Unit Level Preventive Maintenance Checks and Services (Contd).

ITEM NO.	INTERVAL	ITEM TO CHECK/ SERVICE	PROCEDURE	NOT FULLY MISSION CAPABLE IF:
60	Annual	Protective control box (Contd)	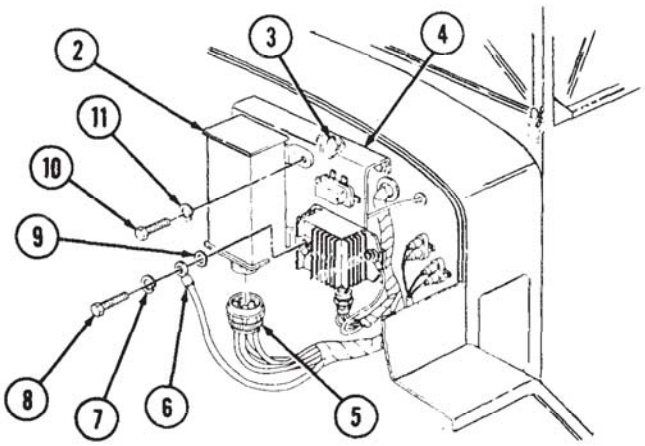 COMPLETE VEHICLE – UNDERSIDE	
61	Annual	Axles and differen-tial	**a.** Inspect differentials for cracks that could cause leaks. Notify your supervisor if cracked.	Differential is cracked.
			b. Inspect axle drive flange for leaks. Notify your supervisor if leaking.	Any class III leak.
			c. Tighten all axle drive flange bolts 81-104 lb-ft (110-141 N•m).	
62	Annual	Brake system	**a.** Remove inspection cover and rotate wheel to align inspection hole to upper end of brakeshoes. If brakeshoes are worn below bevel, replace brakeshoes (para. 8-8).	
			b. Inspect master cylinder and wheel cylinders to ensure they are not loose, leaking, or damaged. Tighten if loose. Replace if damaged (para. 8-10 or 8-11).	
			c. Inspect air-hydraulic cylinder to ensure it is not loose, leaking, or damaged. Tighten if loose. Replace if damaged (para. 8-14).	Air hydraulic cylinder is loose, leaking, or damaged.
			d. Inspect all flexible hydraulic brake hoses for bulges, pinches, crackes, crimping, chafing, abrasions, or leaks. If any of these conditions exist, replace or reposition hose(s) to prevent failure. Check front brake hoses for loose or missing fittings, and ensure they are long enough to allow full steering travel. If brake hose is too short, it must be replaced with a new longer hose (para. 8-13).	Flexible hydraulic brake hose is damaged or leaking.
			e. Inspect parking brakeshoes for wear. Replace both brakeshoes if lining thickness is 3/16 in. (4.76 mm) or less (para. 8-4).	Parking brake cable, lever, or brakeshoe assem-bly binding is loose or damaged.
			f. Inspect parking brake cable, lever, and brakeshoe assembly for binding and loose or missing components. Tighten components if loose, or replace if missing or damaged (chapter 8, section I).	
			g. Check parking brakeshoe clearance to brakedrum. If clearance is not 1/64 in. (0.397 mm), adjust (para. 8-5).	

Table 2-1. Unit Level Preventive Maintenance Checks and Services (Contd).

ITEM NO.	INTERVAL	ITEM TO CHECK/ SERVICE	PROCEDURE	NOT FULLY MISSION CAPABLE IF:

LUBRICANTS	EXPECTED TEMPERATURES		
	ABOVE 15°F (ABOVE -9°C)	+40°F TO -15°F (+4°C TO -26°C)	+40°F TO -65°F (+4°C TO -54°C)
GAA - Grease, automotive and artillery (MIL-G-10924)	All Temperatures		

			COMPLETE VEHICLE – ABOVE	
63	Annual	Bearings: wheel (all), front axle universal joint, and steering knuckle	**a.** Lubricate universal joint (2) and steering knuckle bearing (1) with GAA every 12,000 mi (19,308 km) or 12 months. Remove plug from universal joint housing, fill to level of plug opening, reinstall plug. Do not disassemble C.V. joints. Clean, dry, repack and install wheel bearings. 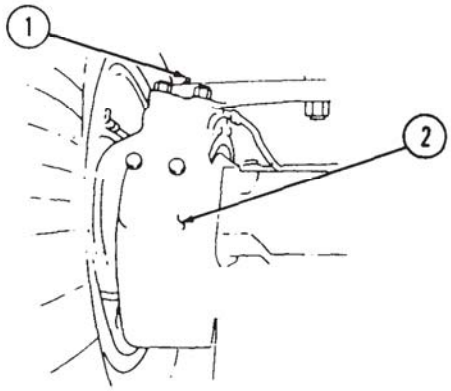 **b.** Remove, clean, dry, repack with GAA, and install front and rear wheel bearings (3) every 12,000 mi (19,308 km) or annually. 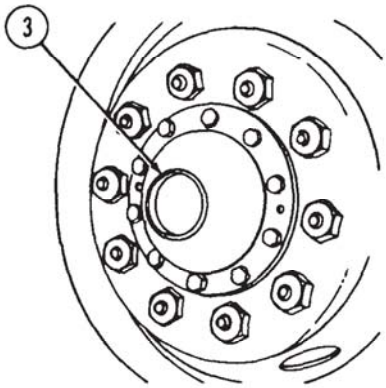	

Table 2-1. Unit Level Preventive Maintenance Checks and Services (Contd).

ITEM NO.	INTERVAL	ITEM TO CHECK/ SERVICE	PROCEDURE	NOT FULLY MISSION CAPABLE IF:
64	Annual	Front winch (All)	Inspect front winch for tight mounting and broken or missing parts. Tighten loose parts. Repair or replace missing or broken parts as necessary (para. 13-7).	Winch mounting is loose, broken, or parts are missing.
65		Rear winch (M816)	**a.** Inspect rear winch and winch controls for tight mounting and broken or missing parts. Tighten loose parts. Repair or replace missing or damaged parts as necessary (para. 13-15 or 13-17).	Winch mounting is loose, broken, or parts are missing.
			b. Check cable tensioner sheaves for proper adjustment. Adjust if necessary (para. 13-24).	Winch cable is kinked, frayed, or worn.
66		Wrecker crane and hydraulic crane (M816, M819)	**a.** Test automatic hoist drum brake for proper operation. Adjust if necessary (para. 13-44).	
			b. With boom raised, inspect crane cylinder piston rods for bends and scoring. Notify your supervisor if bent or scored.	Piston rods are bent, scored, or damaged.
			c. While operating crane, observe that fuel pump governor is maintaining 1250-1300 rpm during hoisting operation. Notify your supervisor if engine rpm is surging erratically.	
			d. Extend crane cable completely and inspect for kinks, frays, and broken strands. Replace crane cable if kinked, frayed, or broken (para. 13-43).	Crane cable is kinked, frayed, or broken.
			e. Inspect and clean hydraulic tank swing motor and hoist crane motor breather caps.	

Table 2-1. Unit Level Preventive Maintenance Checks and Services (Contd).

ITEM NO.	INTERVAL	ITEM TO CHECK/ SERVICE	PROCEDURE	NOT FULLY MISSION CAPABLE IF:

LUBRICANTS	EXPECTED TEMPERATURES		
	ABOVE 15°F (ABOVE -9°C)	+40°F TO -15°F (+4°C TO -26°C)	+40°F TO -65°F (+4°C TO -54°C)
OE/HDO - Lubricating oil, internal combustion engine (MIL-L-2104) **OEA** - Lubricating oil, internal combustion engine (arctic) (MIL-L-46167)	OE/HDO 30	OE/HDO 10	OEA

67	Annual	Hydraulic oil tank drain (M816)	With boom in horizontal position, remove oil filler cap and gage (1) from top of tank. If level is below full mark on gage, replenish with OE/HDO to full mark. Every 12 months, remove pipe plug (4) from drain valve (3), attach hose (furnished with vehicle), and drain oil into a container. Remove plug (2) in bottom of tank to completely drain. Always install plug (4) in drain valve (3) after draining. Refill tank to full mark on level gage with OE/HDO approximately 60 gal. (227 L). Operate crane several times to completely fill system, and check level.	

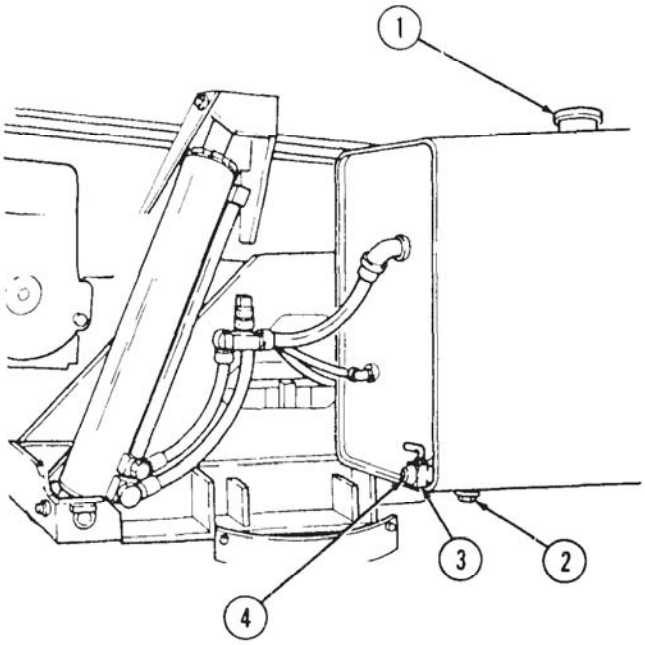

Table 2-1. Unit Level Preventive Maintenance Checks and Services (Contd).

ITEM NO.	INTERVAL	ITEM TO CHECK/ SERVICE	PROCEDURE	NOT FULLY MISSION CAPABLE IF:
68	Annual	Dump body, hoist and hydraulic reservoir drain (M817)	**WARNING** Rest weight of dump body on safety braces when performing maintenance on hoist mechanism with dump body in raised position.	
			a. Inspect dump body for completeness of assembly. Ensure dump body is aligned with frame. Notify your supervisor if misaligned or damaged	
			b. Inspect dump hydraulic lines, hoses, and fittings for leaks, splits, and frays that could cause leaks. Notify your supervisor if leaks, splits, or frays are present.	Any class III leak, or hydraulic hoses are split, frayed, or loose.
			c. Inspect transmission power takeoff, hydraulic pump propeller shaft, and hydraulic pump for tight mounting and leaks. Notify your supervisor if loose, or leaks are present.	
			d. Ensure tailgate control rod hand lever locks and unlocks tailgate lower latch. Inspect control linkage for security, bends, and binding. If loose, bent, or binding, repair or replace as necessary (para. 12-13).	Control linkage is bent, binding, or loose.
			e. Operate dump body and observe for smooth raising and lowering of dump body.	
			f. With dump body raised, inspect cylinder piston rods for scoring and wear. Notify your supervisor if worn or scored.	Cylinder piston rods are bent, scored, or damaged.

Table 2-1. Unit Level Preventive Maintenance Checks and Services (Contd).

ITEM NO.	INTERVAL	ITEM TO CHECK/ SERVICE	PROCEDURE	NOT FULLY MISSION CAPABLE IF:

LUBRICANTS	EXPECTED TEMPERATURES		
	ABOVE 15°F (ABOVE -9°C)	+40°F TO -15°F (+4°C TO -26°C)	+40°F TO -65°F (+4°C TO -54°C)
OE/HDO - Lubricating oil, internal combustion engine (MIL-L-2104) **OEA** - Lubricating oil, internal combustion engine (arctic) (MIL-L-46167)	OE/HDO 10	OE/HDO 10	OEA

68	Annual	Dump body, hoist and hydraulic reservoir drain (M817) (Contd)	**WARNING** Rest weight of dump body on safety braces when performing maintenance on hoist mechanism with dump body in raised position. **CAUTION** Remove filler plugs slowly to release pressure. Do not overfill. **g.** Weekly, remove filler plug, gage and screen; clean and install screen. Replenish with OE/HDO lubricant to third mark from top on gage with body down in lowered position. Install gage and plug. Replenish with oil to third mark from top on gage with body down in lowered position. Install gage and plug. Raise and lower body several times slowly and recheck oil level. Drain every 12 months. Remove drain plug from hydraulic reservoir drain (1) and drain with dump body in lowered position. Clean and install drain plug. Refill reservoir with OE/HDO 10. Raise and lower body several times slowly and recheck oil level. Capacity of hydraulic system is 37 qt (35 L). 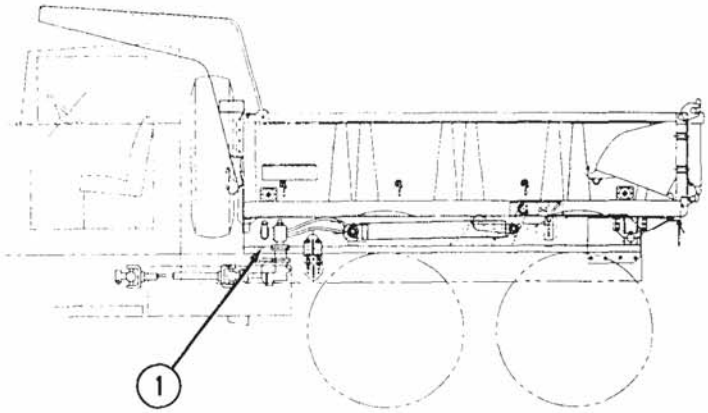	

Table 2-1. Unit Level Preventive Maintenance Checks and Services (Contd).

ITEM NO.	INTERVAL	ITEM TO CHECK/ SERVICE	PROCEDURE	NOT FULLY MISSION CAPABLE IF:

LUBRICANTS	EXPECTED TEMPERATURES		
	ABOVE 15°F (ABOVE -9°C)	+40°F TO -15°F (+4°C TO -26°C)	+40°F TO -65°F (+4°C TO -54°C)
GAA - Grease, automotive and artillery (MIL-G-10924)	All Temperatures		

69	Annual	Power divider/ dump lever cross shaft	**NOTE** Power divider/dump lever cross shaft is located behind driver's seat. Lubricate power divider/dump lever cross shaft (2) with GAA every 12,000 mi (19,308 km) or annually, whichever occurs first. 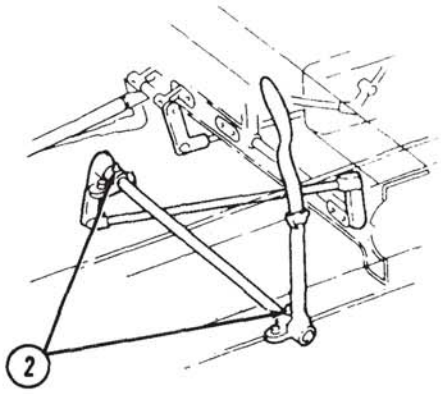 	
70	Annual	Expan-sible van body (M820, M820A1, M820A2)	Expand and retract van body. Check for binding, sticking, bends, and lack of proper lubrication of expanding and retracting mechanisms.	
71	Annual	Expan-sible van with liftgate (M820A2)	With liftgate extended, inspect lift arms and support assemblies for mounting security and completeness of assembly. Notify your supervisor if loose or damaged.	

Table 2-1. Unit Level Preventive Maintenance Checks and Services (Contd).

ITEM NO.	INTERVAL	ITEM TO CHECK/ SERVICE	PROCEDURE	NOT FULLY MISSION CAPABLE IF:
			NOTE Perform all annual and semiannual inspections in addition to biennial inspections at time of the biennial inspection.	
72	Biennial	Dump body	Tighten all dump truck mounting bolts 240 lb-ft (325 N•m).	
73	Biennial	Fifth wheel (M818, M819)	Inspect fifth wheel for completeness of assembly. Ensure mounting screws are tightened 160-170 lb-ft (217-231 N•m).	
74	Biennial	Axles and differen-tials	Inspect axle housings for cracks that could cause leaks. Notify your supervisor if cracked.	

SEMIANNUAL (6,000 MILE) PMCS MANDATORY REPLACEMENT PARTS LIST

NOTE

The Mandatory Replacement Parts List contains items to be replaced during PMCS procedures. Those items found in the parts list are referenced from the PMCS table 2-1 using numbers in brackets [ ].

ITEM NO.	PART NO.	NSN	NOMENCLATURE	QTY.
1.	MS35335-35	5310-00-622-6128	Washer, lock	1
2.	MS45904-72	5301-00-889-2527	Washer, lock	4
3.	12356665		Gasket, fuel filter element	1
4.	12356666		Filter element, fuel	1
5.	153528	5330-00-927-4373	Oil filter seal	1
6.	158139	2940-00-073-3316	Oil filter element	1
7.	67946	5365-00-197-9327	Gasket, oil pan	1
8.	7373279		Screw-assembled lockwasher	1

Section IV. MECHANICAL SYSTEMS TROUBLESHOOTING

2-12. GENERAL

NOTE

If malfunction corrective action does not correct malfunction, notify your supervisor.

a. This section provides information to diagnose and correct malfunctions of the mechanical systems. Because of its complexity, the mechanical system is divided into the following functional systems:

- Engine (page 2-70)
- Cold Start System (page 2-73)
- Exhaust System (page 2-73)
- Cooling System (page 2-74)
- Clutch (page 2-75)
- Nonelectrical Gages (page 2-75)
- Transmission (page 2-76)
- Transfer Case (page 2-76)
- Propeller Shafts (page 2-77)
- Front and Rear Axles (page 2-77)
- Suspension (page 2-78)
- Wheels and Tires (page 2-79)
- Steering (page 2-80)
- Frame and Brackets (page 2-81)
- Power Takeoff (page 2-81)
- Winch (page (2-82)
- Medium Wrecker (M816), Tractor Wrecker (M819) (page 2-83)
- Dump Body (M817) (page 2-83)
- Tractor Body (M818) (page 2-84)
- Expansible Van Body (M820, M820A1, M820A2) (page 2-84)
- Power Liftgate (M820A2) (page 2-86)
- Personnel Hot Water Heater Kit (page 2-87)
- Personnel Fuel Burning Heater/Power Plant Heater Kit (page 2-87)

b. Principles of operation showing system operation for each mechanical system can be found in chapter 1, section III. It should be used as a reference when performing mechanical troubleshooting (table 2-2).

c. Each malfunction symptom given for an individual component or system is followed by a step(s) that should be taken to determine cause and corrective action that must be taken to remedy the problem.

d. Before taking any action to correct a possible malfunction, the following rules should be followed:

(1) Question vehicle operator to obtain information that might help determine cause of the problem.

(2) Never overlook the chance that the problem could be of simple origin and can be corrected with minor adjustment.

(3) Use all senses to observe and locate troubles.

(4) Use test instruments or gages to help determine and isolate problem.

(5) Always isolate system where malfunction occurs and then locate defective component.

(6) Use Principles of Automotive Vehicles, TM 9-8000, when troubleshooting vehicles covered in this manual.

(7) Always park vehicle on level surface and chock wheels before troubleshooting.

(8) Always wear eyeshields when troubleshooting compressed air systems.

2-12. GENERAL (Contd)

e. Omissions. This manual cannot list all mechanical malfunctions that may occur. If a malfunction occurs that is not listed in table 2-2, notify your supervisor.

WARNING

- Do not operate a deadlined vehicle without preliminary inspection. Failure to do so may cause further damage to a disabled component and possible injury to personnel.
- Do not operate vehicle in an enclosed area without adequate ventilation. Failure to do so may result in injury to personnel.
- Hearing protection is required for driver, co-driver, and mechanic when engine is running. Noise levels produced by this vehicle exceed 85 dB, which may cause injury to personnel.

MECHANICAL SYSTEMS TROUBLESHOOTING SYMPTOM INDEX

MALFUNCTION NO.	MALFUNCTION	TROUBLESHOOTING PROCEDURE PAGE
	ENGINE	
1.	Engine will not crank	2-70
2.	Engine cranks but will not start	2-70
3.	Engine cranks slowly, hard to start	2-71
4.	Engine misfires or stops during normal operation	2-71
5.	Poor acceleration and/or lack of power	2-71
6.	Engine surges	2-72
7.	Excessive oil loss or consumption during normal operation and idle	2-72
8.	Engine oil pressure too high or too low at normal operating temperature	2-72
9.	Excessive fuel consumption	2-72
10.	Black exhaust smoke atidle	2-72
11.	Excessive vibration or clunking	2-72
	COLD START SYSTEM	
12.	Engine cranks but will not start in cold weather	2-73
13.	Cold start primer pressure gage reads improperly	2-73
	EXHAUST SYSTEM	
14.	Exhaust color blue during normal operation	2-73
15.	Exhaust color white during normal operation and idle	2-73
16.	Excessive exhaust noise	2-74
17.	Exhaust fumes in cab	2-74
	COOLING SYSTEM	
18.	Engine coolant temperature gage above 230°F (110°C)	2-74
19.	Engine does not reach normal operating temperature	2-75
20.	Loss of coolant during normal operation	2-75
	CLUTCH	
21.	Vehicle creeps with clutch depressed	2-75
22.	Clutch drags, slips, or does not engage	2-75

MECHANICAL SYSTEMS TROUBLESHOOTING SYMPTOM INDEX (Contd)

MALFUNCTION NO.	MALFUNCTION	TROUBLESHOOTING PROCEDURE PAGE
	NONELECTRICAL GAGES	
23.	Speedometer, tachometer, or tachograph bounces, noisy, or inoperative	2-75
24.	Airpressure gage inoperative	2-76
25.	Oil pressure gage inoperative (oil level is proper)	2-76
	TRANSMISSION	
26.	Excessive noise during shifting..	2-76
27.	Transmission oil leakage	2-76
28.	No shift lever response	2-76
	TRANSFER CASE	
29.	Hard shifting of transfer case	2-76
30.	Transfer case noisy or vibrates excessively	2-77
31.	Transfer case will not shift	2-77
32.	Front wheel drive will not engage or disengage	2-77
33.	Transfer case oil leakage	2-77
	PROPELLER SHAFTS	
34.	Propeller shaft vibration or noise	2-77
	FRONT AND REAR AXLES	
35.	Axles leaking oil	2-77
36.	Continuous axleorwheel noise..	2-78
	SUSPENSION	
37.	Noisy suspension	2-78
38.	Continuous wandering or swaying (poor control)	2-79
39.	Vehicle sags	2-79
40.	Harsh or hard ride	2-79
	WHEELS AND TIRES	
41.	Uneven tire wear	2-79
42.	Shimmy, wobble, orvibration.	2-79
	STEERING	
43.	Too much play in steering	2-80
44.	Hard steering	2-80
45.	Vehicle wanders or pulls to one side	2-80
46.	Oilleaking from steering system.	2-81
	FRAME AND BRACKETS	
47.	Towing pintle does not latch or lock.	2-81
48.	Pintle hook does not turn	2-81
	POWER TAKEOFF	
49.	Power takeoff noisy	2-81
50.	Power takeoff difficult to shif t	2-81

MECHANICAL SYSTEMS TROUBLESHOOTING SYMPTOM INDEX (Contd)

MALFUNCTION NO.	MALFUNCTION	TROUBLESHOOTING PROCEDURE PAGE
	WINCH	
51.	Winch inoperative (front, midship, and rear)	2-82
52.	Winch operates inonedirection only.	2-82
53.	Drag brake doesnotoperate	2-82
54.	Winch will not hold load	2-82
55.	Automatic brake overheats	2-82
56.	Vehicle rolls while operating rear winch	2-83
	MEDIUM WRECKER (M816), TRACTOR WRECKER (M819)	
57.	Hydraulic system does not operate.	2-83
	DUMP BODY (M817)	
58.	Dump body will not raise	2-83
59.	Dump body does not hold in raised position	2-84
60.	Dump body will not lower	2-84
61.	Tailgate does not open	2-84
	TRACTOR BODY (M818)	
62.	Trailer will not hitch to fifth wheel..	2-84
	EXPANSIBLE VAN BODY (M820, M820A1, M820A2)	
63.	Side panels hard to retract or expand	2-84
64.	Side panel cannot be locked in retracted position	2-84
65.	Hinged roof and floor panels cannot be locked in folded position.	2-85
66.	Van bodynotwaterproof orlighttight	2-85
67.	Door lock will not operate	2-85
68.	Heater will not ignite	2-85
	POWER UFTGATE (M820A2)	
69.	Lift gate will not operate	2-86
70.	Platform stops before reaching stowed position or stops above body floor whenraised fromtheground.	2-86
71.	Platform closes at angle other than straight up	2-86
72.	Liftgate operates sloworjerky	2-86
	PERSONNEL HOT WATER HEATER KIT	
73.	Personnel hot water heater does not heat cab	2-87
	PERSONNEL FUEL BURNING HEATER/POWER PLANT HEATER KIT	
74.	Heater will not operate	2-87

Table 2-2. Mechanical Troubleshooting.

MALFUNCTION
TEST OR INSPECTION
CORRECTIVE ACTION

ENGINE

1. ENGINE WILL NOT CRANK

Step 1. Check starting system (table 2-4, electrical troubleshooting, malfunction 2).

Step 2. Remove starter and visually check starter drive, ring gear, and flywheel for broken and missing teeth.

a. Replace starter if starter teeth are damaged (para. 4-5).

b. If ring gear is damaged, notify your supervisor.

WARNING

Ensure fuel shutoff valve is OFF and remove throttle cable before cranking engine. Failure to do so may result in injury to personnel.

Step 3. Check for seized engine or fluid-locked pistons. Remove radiator and rotate engine at accessory drive pulley bolt two full revolutions with starter removed.

If engine is seized, notify your supervisor.

Step 4. Check belt-driven engine accessories and water pump for seizure. Remove all drivebelts (paras. 3-52,3-54,4-4, and 9-16).

Manually turn drive pulley of each accessory and water pump.

a. If water pump drive pulley or accessory drive pulley will not turn, notify your supervisor.

b. Replace accessory if any drive pulley will not turn (paras. 3-49, 3-55,4-2, and 9-17).

Step 5. Check air induction system for presence of water.

Remove air cleaner element (para. 3-17).

a. Replace element if air cleaner element is contaminated with water (para. 3-17).

b. If water is present within air cleaner, notify your supervisor.

Step 6. Check vertical and horizontal exhaust system for presence of water. Remove muffler from exhaust manifold (para. 3-42).

If water is present in exhaust pipes or muffler, notify your supervisor.

END OF TESTING!

2. ENGINE CRANKS BUT WILL NOT START

Step 1. Refer to table 2-4, electrical troubleshooting, malfunction 4.

Step 2. Check air cleaner indicator (TM 9-2320-260-10).

a. If red appears at indicator window, inspect air cleaner cap and air cleaner element for obstructions (para. 3-17).

b. Reset air cleaner indicator (TM 9-2320-260-10).

WARNING

- Diesel fuel is highly flammable. Do not perform troubleshooting checks near open flame. Injury to personnel may result.
- Compressed air source will not exceed 30 psi (207 kPa). When cleaning with compressed air, eyeshields must be worn. Failure to wear eyeshields may result in injury to personnel.

Table 2-2. Mechanical Troubleshooting (Contd).

MALFUNCTION TEST OR INSPECTION CORRECTIVE ACTION

Step 3. Open valve and drain 0.5 pt (0.25 L) of fuel from fuel line. Check for contaminated fuel.
Remove fuel tank if water or contamination is present (para. 3-24). Clean and flush entire fuel system. Dry system with compressed air.

Step 4. Remove and inspect fuel filter element for dirty and clogged condition (para. 3-26).
Replace fuel filter if filter is dirty or clogged (para. 3-26).

Step 5. Inspect fuel lines and connections for leaks, obstructions, and damage.
a. Visually check for leaks. If a leak is at a connection, tighten. Replace tubing if leak results from cracked, split, or damaged tubing.
b. Disconnect fuel lines at both ends. If fuel line is clogged, clear with compressed air.
c. Reconnect fuel line(s).
d. Prime fuel system (TM 9-2320-260-10).

Step 6. Check for white exhaust smoke during cranking.
a. If white smoke can still be seen, air may be in fuel system. Prime fuel system (TM 9-2320-260-10).
b. If white smoke can still be seen, coolant maybe inside combustion chambers. If coolant is present on dipstick, notify your supervisor.

END OF TESTING!

3. ENGINE CRANKS SLOWLY, HARD TO START

Step 1. Check starting system circuits (table 2-4, electrical troubleshooting, malfunction 3).

Step 2. In cold weather make sure proper engine oil is being used.
Add or replace oil (LO 9-2320-260-12).

END OF TESTING!

4. ENGINE MISFIRES OR STOPS DURING NORMAL OPERATION

Step 1. Check air cleaner for restrictions (malfunction 2, step 2).

Step 2. Check fuel system for contamination and restrictions (malfunction 2, steps 3,4, and 5).

Step 3. Check exhaust system for bends, restrictions, or damage.
Replace restricted or damaged parts (chapter 3, section VI).

END OF TESTING!

5. POOR ACCELERATION AND/OR LACK OF POWER

Step 1. Check air cleaner for restriction (malfunction 2, step 2).

Step 2. Check fuel system for contamination and restrictions (malfunction 2, steps 3,4, and 5).

Step 3. Check exhaust system for restrictions.
Replace restricted or damaged parts (chapter 3, section VI).

Step 4. Inspect accelerator pedal and accelerator control linkage for full travel.
Adjust throttle lever travel (para. 3-37).

Step 5. Check accelerator control linkage for binding and sticking.
Replace accelerator control linkage if binding or sticking (para. 3-37).

Step 6. Check vehicle for dragging brakes, low tire inflation, or cargo overload limit (TM 9-2320-260-10).
a. If defects are evident during checks, adjust or replace components (para. 8-8, 8-9, or TM 9-2320-260-10).
b. Correct overload condition (TM 9-2320-260-10).

END OF TESTING!

Table 2-2. Mechanical Troubleshooting (Contd).

MALFUNCTION TEST OR INSPECTION CORRECTIVE ACTION

6. ENGINE SURGES

Step 1. Check fuel system for contamination and restrictions (malfunction 2, steps 3, 4, and 5).

Step 2. Inspect accelerator linkage for proper operation and adjustment.

Adjust or replace as necessary (para. 3-37).

END OF TESTING!

7. EXCESSIVE OIL LOSS OR CONSUMPTION DURING NORMAL OPERATION AND IDLE

Step 1. Check for overfilling. Check oil level (TM 9-2320-260-10).

Drain crankcase to safe operating level if oil level is too high (LO 9-2320-260-12).

Step 2. Check for external oil leaks at oil pan, drainplug, oil filter housing, oil pump hoses and tube, oil dipstick tube, and rocker arm cover.

Tighten any loose connections or loose screws that may cause leaks and fill oil to proper level (LO 9-2320-260-12).

END OF TESTING!

8. ENGINE OIL PRESSURE TOO HIGH OR TOO LOW AT NORMAL OPERATING TEMPERATURE

Step 1. Check engine oil level (TM 9-2320-260-10).

Add or replace oil (LO 9-2320-260-12).

Step 2. Check for external oil leaks (malfunction 7, step 2).

Step 3. Check oil pressure line for bends, obstructions, and damage

Replace if damaged (para. 3-6).

Step 4. Check oil pressure gage for proper operation.

Connect oil pressure gage, which is known to be good, to oil pressure line. If test gage indicates proper pressure, replace oil pressure gage (para. 4-9). If test gage indicates improper pressure, shut down engine and notify your supervisor.

END OF TESTING!

9. EXCESSIVE FUEL CONSUMPTION

Step 1. Check for air cleaner restriction (malfunction 2, step 2).

Step 2. Inspect fuel lines, hoses, and connections for leaks and damage.

Tighten any loose connections. Replace damaged lines

END OF TESTING!

10. BLACK EXHAUST SMOKE AT IDLE

Step 1. Check fuel for water and dirt contamination (malfunction 2, step 3).

Step 2. Check air cleaner indicator for restriction indication (malfunction 2, step 2).

Step 3. Check cooling system (malfunction 18).

END OF TESTING!

11. EXCESSIVE VIBRATION OR CLUNKING

Check engine mounts and pads for looseness or damage.

If loose or damaged, notify your supervisor.

END OF TESTING!

Table 2-2. Mechanical Troubleshooting (Contd).

MALFUNCTION TEST OR INSPECTION CORRECTIVE ACTION

COLD START SYSTEM

12. ENGINE CRANKS BUT WILL NOT START IN COLD WEATHER

Step 1. Check cold start electrical system (table 2-4, electrical troubleshooting, malfunction 36).

Step 2. Open air purge draincock, place drainage container under draincock, and operate preheater pump.

Replace preheater pump if fuel is not discharged (para. 3-31).

Step 3. Disconnect hose from draincock and remove draincock with preheater nozzle. Connect hose to draincock, direct nozzle into drainage container, and operate preheater pump.

Replace preheater nozzle if fuel does not discharge (para. 3-30).

END OF TESTING!

13. COLD START PRIMER PRESSURE GAGE READS IMPROPERLY

Check primer pressure gage for proper operation.

Connect pressure gage known to be good to fuel line and operate preheater pump. If test gage indicates pressure, replace primer pressure gage (para. 3-29). If test gage indicates improper pressure, replace preheater pump (para. 3-31).

END OF TESTING!

EXHAUST SYSTEM

WARNING

Do not touch hot exhaust system components with bare hands. Injury to personnel may result.

14. EXHAUST COLOR BLUE DURING NORMAL OPERATION

NOTE

Blue exhaust indicates presence of excess engine oil in cylinder combustion chamber.

Step 1. Check that engine oil grade is correct for vehicle use and climatic conditions (LO 9-2320-260-12).

Replace oil (LO 9-2320-260-12) and oil filters if oil grade is incorrect (para. 3-5).

Step 2. Check that engine fuel grade is correct for vehicle use and climatic conditions (TM 9-2320-260-10).

a. Drain complete fuel system and replace with correct grade of fuel if fuel grade is incorrect (TM 9-2320-260-10).

b. If problem persists, notify your supervisor.

END OF TESTING!

15. **EXHAUST COLOR WHITE DURING NORMAL OPERATION AND IDLE**

CAUTION

Thick white smoke indicates coolant is present in engine combustion chambers during operation. When this condition is evident, shut engine down immediately and determine cause. Continued engine operation may result in permanent engine damage.

Step 1. Check engine temperature. Ensure engine temperature is at specified level (TM 9-2320-260-10).

If engine temperature is above operating level, perform malfunction 18.

Table 2-2. Mechanical Troubleshooting (Contd).

MALFUNCTION
TEST OR INSPECTION
CORRECTIVE ACTION

Step 2. If problem persists, notify your supervisor.

END OF TESTING!

16. EXCESSIVE EXHAUST NOISE

Inspect exhaust pipes for secure connections, cracks, breaks, and excessive rust.

Replace damaged parts (chapter 3, section VI).

END OF TESTING!

17. EXHAUST FUMES IN CAB

Inspect exhaust manifold, exhaust pipes, muffler, and connections for leaks.

a. Replace damaged parts (chapter 3, section VI).

b. If exhaust manifold is leaking or damaged, notify your supervisor.

END OF TESTING!

COOLING SYSTEM

18. ENGINE COOLANT TEMPERATURE GAGE ABOVE 230°F (110°C)

WARNING

Care should be taken when removing surge tank filler cap. Steam or hot coolant under pressure may cause injury to personnel.

Step 1. Check coolant protection level with antifreeze tester.

CAUTION

Do not add coolant when engine is hot. Internal engine damage could result.

If coolant is not within safe range, service cooling system (para. 3-45).

Step 2. Inspect drivebelts and drive pulleys of accessories for damage and check belt tension.

a. Replace or adjust drivebelts (para. 3-52, 3-54, 4-4, or 9-16).

b. Replace accessory if drive pulley will not turn (para. 3-49, 3-55, 4-2, or 9-17).

Step 3. Inspect radiator, hoses and hose connections, drain valves, and surge tank for leaks.

a. Tighten hose clamps and fittings.

b. Replace defective cooling system components (chapter 3, section VII).

c. Tighten or close drain valves.

d. Replace leaking radiator (para. 3-50).

e. Replace leaking surge tank (para. 3-48).

Step 4. Inspect fan blade for broken or missing blades.

Replace fan blade (para. 3-53).

Step 5. Inspect radiator for bent fins and airflow obstructions.

Straighten bent fins, clear obstructions, or replace radiator (para. 3-50).

Step 6. Check cooling system for restriction.

Clean and flush system (para. 3-45).

Step 7. Check operation of temperature gage (table 2-4, electrical troubleshooting, malfunction 30).

Replace thermostat if condition continues (para. 3-47).

END OF TESTING!

Table 2-2. Mechanical Troubleshooting (Contd).

MALFUNCTION TEST OR INSPECTION CORRECTIVE ACTION

19. ENGINE DOES NOT REACH NORMAL OPERATING TEMPERATURE

Test coolant temperature gage. sending unit. and electrical circuits (table 2-4. electrical trouble-shooting, malfunction 30).

END OF TESTING!

20. LOSS OF COOLANT DURING NORMAL OPERATION

Step 1. Pressurize cooling system and check for leaks.

a. Tighten loose clamps, fasteners, and fittings.

b. Replace leaking hoses (para. 3-46).

c. Replace leaking radiator (para. 3-50).

d. Replace leaking surge tank (para. 3-48).

Step 2. Check surge tank cap for proper relief pressure (TM 750-254). Relief pressure should be 14 psi (96.% kPa).

Replace surge tank cap if defective (para. 3-48).

END OF TESTING!

CLUTCH

21. VEHICLE CREEPS WITH CLUTCH DEPRESSED

Step 1. Check clutch pedal free travel. Clutch pedal should have 2-2.5 in. (5.1-6.4 cm) free travel.

Adjust clutch pedal free travel as necessary (para. 3-12).

Step 2. Check check linkage for bends and broken parts.

Replace damaged parts (para. 3-13).

END OF TESTING!

22. CLUTCH DRAGS, SLIPS, OR DOES NOT ENGAGE

Step 1. Check clutch pedal free travel (malfunction 21, step 1).

Step 2. Check linkage for proper lubrication (LO 9-2320-260-12).

Lubricate clutch linkage if dry (LO 9-2320-260-12).

Step 3. Check clutch linkage for binding, bends, and broken parts.

Replace binding, bent, or broken parts (para. 3-13).

END OF TESTING!

NONELECTRICAL GAGES

23. SPEEDOMETER, TACHOMETER, OR TACHOGRAPH BOUNCES, NOISY, OR INOPERATIVE

Step 1. Inspect speedometer or tachometer flexible shaft for binding, kinks, or breaks.

Replace if damaged (para. 4-12 or 4-13).

Step 2. Inspect speedometer, tachometer, or tachograph for proper operation.

a. Test proper operation of speedometer, tachometer, or tachograph by replacing with speedometer, tachometer, or tachograph, which is known to be good (para. 4-11 or 14-49).

b. If test speedometer, tachometer, or tachograph functions properly, replace defective speedometer, tachometer, or tachograph (para. 4-11 or 14-49).

END OF TESTING!

Table 2-2. Mechanical Troubleshooting (Contd).

MALFUNCTION TEST OR INSPECTION CORRECTIVE ACTION

24. AIR PRESSURE GAGE INOPERATIVE

Check operation of air pressure gage (table 2-3, compressed air and brake troubleshooting, malfunctions 13 and 14).

END OF TESTING!

25. OIL PRESSURE GAGE INOPERATIVE (OIL LEVEL IS PROPER)

Check operation of oil pressure gage (malfunction 8, step 4).

END OF TESTING!

TRANSMISSION

26. EXCESSIVE NOISE DURING SHIFTING

Step 1. Check clutch for proper adjustment (malfunction 21, step 1),

Step 2. Check transmission fluid level (LO 9-2320-260-12).

a. If fluid level is low, add fluid (LO 9-2320-260-12).

b. If transmission seals are leaking, notify your supervisor.

Step 3. Check propeller shaft for misalinement, loose mounting screws, and worn slip joint.

Replace or repair if damaged (paras. 7-2 and 7-4).

Step 4. Check universal joints for wear and damage.

Replace if worn or damaged (para. 7-5).

END OF TESTING!

27. TRANSMISSION OIL LEAKAGE

Step 1. Check transmission fluid level (LO 9-2320-260-12).

If fluid level is too high, drain to proper level (LO 9-2320-260-12).

Step 2. Check drainplug for leaks.

If drainplug is leaking, tighten.

Step 3. Check breather for restrictions.

Replace if damaged or clean if restricted (para. 5-2).

END OF TESTING!

28. NO SHIFT LEVER RESPONSE

Step 1. Check clutch linkage to make sure it is connected, properly adjusted, and for binding, bends, and broken parts.

Connect, adjust, or replace damaged parts (para. 3-13).

Step 2. Check gearshift lever for binding.

If gearshift lever binds, notify your supervisor.

END OF TESTING!

TRANSFER CASE

29. HARD SHIFTING OF TRANSFER CASE

Step 1. Check transfer case fluid level (LO 9-2320-260-12).

Fill or drain to proper level as necessary (LO 9-2320-260-12).

Step 2. Inspect transfer case shift linkage for proper lubrication.

Lubricate linkage as necessary (LO 9-2320-260-12).

Step 3. Inspect shift linkage for improper adjustment, bends, breaks, or missing parts.

END OF TESTING!

Table 2-2. Mechanical Troubleshooting (Contd).

MALFUNCTION TEST OR INSPECTION CORRECTIVE ACTION

30. TRANSFER CASE NOISY OR VIBRATES EXCESSIVELY

Step 1. Check transfer case fluid level (LO 9-2320-260-12).
Fill to proper level (LO 9-2320-260-12).

Step 2. Drain transfer case fluid (LO 9-2320-260-12) and check for metal contamination.
If evidence of metal contamination is found, notify your supervisor.

END OF TESTING!

31. TRANSFER CASE WILL NOT SHIFT

Inspect shift linkage for improper adjustment, bends, breaks, and missing parts.
Adjust or replace damaged parts (para. 6-4).

END OF TESTING!

32. FRONT WHEEL DRIVE WILL NOT ENGAGE OR DISENGAGE

Inspect transfer case declutch piping for leaks, kinks, and damage.
Replace if damaged (para. 6-3).

END OF TESTING!

33. TRANSFER CASE OIL LEAKAGE

Step 1. Check drainplug for leaks.
Tighten drainplug if leaking.

Step 2. Check breather for restrictions and damage.
Clean restricted breather or replace if damaged (para. 6-5).

END OF TESTING!

PROPELLER SHAFTS

34. PROPELLER SHAFT VIBRATION OR NOISE

Step 1. Inspect propeller shaft for foreign material or damage.
Clean foreign material from propeller shaft or replace if damaged (para. 7-2 or 7-4).

Step 2. Inspect propeller shaft for loose screws or nuts.
Tighten any loose screws or nuts.

Step 3. Check universal joints for play or looseness.
If rust is visible around U-joint, disassemble and inspect. Replace U-joint if damaged (para. 7-5).

Step 4. Inspect center bearing (if equipped) for looseness or damage.
Tighten if loose. Replace if damaged (para. 7-6).

Step 5. Check grease fittings for clogs and lubricate U-joints (LO 9-2320-260-12).

END OF TESTING!

FRONT AND REAR AXLES

35. AXLES LEAKING OIL

Step 1. Check condition of axle seals and flange gaskets (if used). Inspect drum area for presence of gear oil. Replace axle seals if gear oil is present in or on brake drum (para. 7-11 [front], or 7-12 [rear]).

Step 2. Check companion flange areas for presence of gear oil at gaskets.
If gear oil is present, notify your supervisor.

Table 2-2. Mechanical Troubleshooting (Contd).

MALFUNCTION TEST OR INSPECTION CORRECTIVE ACTION

Step 3. Check axle housing condition. Inspect axle housing for external evidence of gear oil.
If axle housing is leaking gear oil, notify your supervisor.

END OF TESTING!

36. CONTINUOUS AXLE OR WHEEL NOISE

Step 1. Check to see if transfer selector lever is in "LOW" position.
Place transfer selector lever in "HIGH" position when traveling on hard, flat surfaces,

Step 2. Check tires for improper inflation or damage.
a. Inflate tires to proper inflation (TM 9-2320-260-10).
b. Replace damaged tires (para. 9-3).

Step 3. Check for loose or missing wheel lug nuts or adapter nuts.
a. Tighten lug nuts or adapter nuts 450-500 lb-ft (610-678 N•m).
b. Replace missing lug or adapter nuts (para. 9-3).

Step 4. Check lubrication level in axle housing and differential.
Lubricate differential and axle housing to proper level (LO 9-2320-260-12).

Step 5. Check lubrication of wheel bearings.
Lubricate wheel bearings (LO 9-2320-260-12).

Step 6. Check for loose or damaged wheel bearings. Raise wheel off ground. Use prybar to check for excessive play.
a. Adjust wheel bearings (para. 9-6).
b. Replace wheel bearings if damaged (para. 9-4 or 9-5).

Step 7. Inspect axle shaft for damage,
Replace damaged axle shaft (para. 7-10 or 7-12).

Step 8. Check differential oil seals for leaks.
If leaking, notify your supervisor.

Step 9. Check yoke oil seal for leaks.
If leaking, notify your supervisor.

END OF TESTING!

SUSPENSION

37. NOISY SUSPENSION

Step 1. Inspect leaf springs for breaks and damage.
Replace if damaged (para. 7-15 or 7-18).

Step 2. Check spring U-bolts and shackles for lack of lubrication, looseness, wear, or damage.
a. Lubricate as necessary (LO 9-2320-260-12).
b. Tighten loose U-bolts and shackles.
c. Replace worn or broken parts (para. 7-15, 7-16, or 7-17).

Step 3. Check rear spring seat pads for wear.
Replace spring seat pads if springs are rubbing against spring seat bracket (para. 7-18).

END OF TESTING!

Table 2-2. Mechanical Troubleshooting (Contd).

MALFUNCTION TEST OR INSPECTION CORRECTIVE ACTION

38. CONTINUOUS WANDERING OR SWAYING (POOR CONTROL)

Step 1. Inspect leaf spring for breaks or damage.
Replace leaf spring if damaged (para. *7-16).*

Step 2. Check tires for wear (malfunction 41).

Step 3. Inspect spring U-bolts and shackles (malfunction 37, step 2).

Step 4. Check steering system (malfunctions 43 through 46).

END OF TESTING!

39. VEHICLE SAGS

Step 1. Inspect leaf spring for breaks or damage (malfunction 37, step 1).

Step 2. Inspect spring U-bolts and shackles (malfunction 37, step 2).

END OF TESTING!

40. HARSH OR HARD RIDE

Step 1. Inspect spring U-bolts and shackles (malfunction 37, step 2).

Step 2. Test shock absorbers for resistance. Disconnect top end of shock absorber. Pull up and down to test resistance. If there is little or no resistance or spaced resistance, shock absorber is defective.
Replace defective shock absorber (para. 7-20).

END OF TESTING!

WHEELS AND TIRES

41. UNEVEN TIRE WEAR

Step 1. Check tires for proper inflation (TM 9-2320-260-10).
Adjust tire pressure if necessary (TM 9-2320-260-10).

Step 2. Check for loose or missing inner wheel adapter nuts or lug nuts (malfunction 36, step 3).

Step 3. Check shock absorbers for class II or class III leaks or damage.
Replace defective shocks (para. 7-19).

Step 4. Check wheel bearings for proper adjustment and damage (malfunction 36, step 6).

Step 5. Check for improper toe-in adjustment.
If tire problem is on front wheels, adjust toe-in (para. 9-8).

Step 6. Check that tires have been properly rotated (TM 9-2610-200-24 and TM 9-2610-201-14).

END OF TESTING!

42. SHIMMY, WOBBLE, OR VIBRATION

Step 1. Check for dirt or mud buildup on wheel.
Clean dirt and mud from wheel.

Step 2. Check for loose or missing inner wheel adapter nuts or lug nuts (malfunction 36, step 3).

Step 3. Inspect wheels for bends and damage to rims.
Replace wheel if bent or damaged (para. 9-3).

Step 4. Inspect wheel bearings for proper adjustment and damage (malfunction 36, step 6).

Step 5. Inspect tie rod ends for wear or damage.
Replace loose, worn, or damaged tie rod ends (para. 9-9).

END OF TESTING!

Table 2-2. Mechanical Troubleshooting (Contd).

MALFUNCTION TEST OR INSPECTION CORRECTIVE ACTION

STEERING

43. TOO MUCH PLAY IN STEERING

Step 1. Check for correct tire pressure (TM 9-2320-260-10).
Adjust tire pressure if necessary (TM 9-2320-260-10).

Step 2. Check steering gear for loose mounting screws.
Tighten loose mounting screws.

Step 3. Inspect pitman arm, drag link, steering arm, and tie rod ends for looseness or damage (paras. 9-9,9-11, and 9-12).
a. Replace loose or damaged parts (paras. 9-9, 9-11, and 9-12).
b. Adjust for correct toe-in (para. 9-8).
c. If steering arm is damaged, notify your supervisor.

Step 4. Inspect wheel bearings for proper adjustment and damage (malfunction 36, step 6).

END OF TESTING!

44. HARD STEERING

Step 1. Check front tires for proper inflation (TM 9-2320-260-10).
Adjust tire pressure as necessary (TM 9-2320-260-10).

Step 2. Inspect pitman arm, drag link, steering arm, and tie rod ends for binding, damage, or lack of lubrication.
a. If binding, lubricate (LO 9-2320-260-12).
b. Replace if bent or damaged (paras. 9-9, 9-11, and 9-12).
c. If steering arm is damaged, notify your supervisor,

Step 3. Inspect power steering drivebelts for glazing, splits, cracks, breaks, and looseness.
Replace if glazed, split, cracked, or broken. Adjust if loose.

Step 4. Inspect power steering pump, hoses, tubes, and assist cylinder for leaks or damage.
a. Tighten loose connections.
b. Replace power steering pump, hoses, tubes, and assist cylinder if leaking or damaged (para. 9-10,9-17, or 9-18).

Step 5. Check for improper toe-in adjustment.
Adjust toe-in if necessary (para. 9-8).

END OF TESTING!

45. VEHICLE WANDERS OR PULLS TO ONE SIDE

Step 1. Check front tires for proper inflation (TM 9-2320-260-10).
Adjust tire pressure as necessary (TM 9-2320-260-10).

Step 2. Check front tires for uneven tire wear (malfunction 37).

Step 3. Check for dragging brakes (table 2-3, malfunction 4 or 5).

Step 4. Check wheel bearings for proper adjustment and damage (malfunction 36, step 6).

Step 5. Check steering gear for loose mounting screws.
Tighten loose mounting screws.

Step 6. Inspect spring U-bolt and shackles (malfunction 37, step 2).

Step 7. Inspect pitman arm, drag link, steering arm, and tie rod ends (malfunction 43, step 3).

END OF TESTING!

Table 2-2. Mechanical Troubleshooting (Contd).

MALFUNCTION TEST OR INSPECTION CORRECTIVE ACTION

46. OIL LEAKING FROM STEERING SYSTEM

Inspect power steering pump, assist cylinder, tubes, and hoses for leaks and damage.

a. Tighten loose connections.

b. Replace power steering pump, assist cylinder, tubes, or hoses if leaking or damaged (para. 9-10,9-17, or 9-18).

END OF TESTING!

FRAME AND BRACKETS

47. TOWING PINTLE DOES NOT LATCH OR LOCK

Inspect pintle hook for lubrication, missing, or damaged parts.

a. Lubricate pintle hook as required (LO 9-2320-260-12).

b. Replace damaged parts (para. 10-9 or 10-10).

END OF TESTING!

48. **PINTLE HOOK DOES NOT TURN**

Step 1. Check pintle hook for lubrication. Lubricate pintle hook as required (LO 9-2320-260-12).

Step 2. Check for 0.010 in. ± 0.007 in. (0.25 mm ± 0.18 mm) clearance between thrust washer and mounting bracket housing.

a. If clearance is the same completely around, but not 0.010 in. ± 0.007 in. (0.25 mm ± 0.18 mm), adjust (para. 10-9 or 10-10).

b. If clearance is not the same completely around, go to step 3.

Step 3. Inspect pintle hook shaft for bends.

a. Remove pintle hook (para. 10-9 or 10-10).

b. Replace pintle hook if bent (para. 10-9 or 10-10).

END OF TESTING!

POWER TAKEOFF

49. POWER TAKEOFF NOISY

Inspect PTO propeller shaft for proper lubrication, bends, and damage.

a. Lubricate propeller shaft if necessary (LO 9-2320-260-12).

b. Replace propeller shaft if bent or damaged (para. 13-9, 13-14, 13-29, 13-47, or 13-54).

c. If condition continues, notify your supervisor.

END OF TESTING!

50. POWER TAKEOFF DIFFICULT TO SHIFT

Inspect PTO shift linkage for bends, cracks, improper adjustment, and proper lubrication.

a. Lubricate PTO shift linkage if necessary (LO 9-2320-260-12).

b. Replace shift linkage if bent or cracked (para. 13-62, 13-63, or 13-64).

c. Adjust shift linkage (para. 13-62, 13-63, or 13-64).

END OF TESTING!

Table 2-2. Mechanical Troubleshooting (Contd).

MALFUNCTION TEST OR INSPECTION CORRECTIVE ACTION

WINCH

51. WINCH INOPERATIVE (FRONT, MIDSHIP, AND REAR)

Step 1. Check PTO linkage (malfunction 50).

Step 2. Check power divider control linkage for lack of lubrication, bent, binding, or damaged parts, and mi sadjustment.

a. Lubricate power divider control linkage (LO 9-2320-260-12).

b. Replace bent, binding, or damaged linkage (para. 13-56).

c. Adjust power divider control linkage (para. 13-56),

Step 3. Inspect rear winch clutch control lever linkage for lack of lubrication, bent, binding, or damaged parts, or misadjustment.

a. Lubricate clutch control linkage (LO 9-2320-260-12).

b. Replace bent, binding, or damaged linkage (para. 13-19).

c. Adjust clutch control linkage (para. 13-19).

Step 4. Inspect propeller shafts for breaks.

Replace broken propeller shafts (paras. 13-9, 13-14, 13-29, 13-47, or 13-54).

Step 5. Check for broken or missing shear pin.

Replace if broken or missing (TM 9-2320-260-10).

Step 6. Inspect for broken winch drive chain (rear or midship).

Replace broken winch drive chain.

Step 7. Check automatic brake adjustment (para. 13-3).

END OF TESTING!

52. WINCH OPERATES IN ONE DIRECTION ONLY

Step 1. Check winch control linkage for bends and kinks.

Replace winch control linkage if bent or kinked (para. 13-18 or 13-62).

Step 2. Check transmission PTO linkage (malfunction-, 50).

END OF TESTING!

53. DRAG BRAKE DOES NOT OPERATE

Check drag brake adjustment.

a. Adjust drag brake as necessary (para. 13-4).

b. Replace winch if adjustment will not correct drag brake operation (para. 13-8, 13-12, or 13-15).

END OF TESTING!

54. WINCH WILL NOT HOLD LOAD

Check automatic brake adjustment.

Adjust automatic brake as necessary (para. 13-3).

END OF TESTING!

55. AUTOMATIC BRAKE OVERHEATS

Step 1. Check weight limits of winch.

Adjust size of load or use snatch block if winch is overloaded.

Step 2. Check automatic brake adjustment.

Adjust automatic brake as necessary (para. 13-3).

END OF TESTING!

Table 2-2. Mechanical Troubleshooting (Contd).

MALFUNCTION TEST OR INSPECTION CORRECTIVE ACTION

56. VEHICLE ROLLS WHILE OPERATING REAR WINCH

Step 1. Check parking brake for proper adjustment (table 2-3, compressed air and brake troubleshooting, malfunction 1).

Step 2. Check microbrake lock switch for proper operation (table 2-4, electrical troubleshooting, malfunction 40).

END OF TESTING!

MEDIUM WRECKER (M816), TRACTOR WRECKER (M819)

57. HYDRAULIC SYSTEM DOES NOT OPERATE

Step 1. Check reservoir oil level.

Fill to proper level if necessary (LO 9-2320-260-12).

Step 2. Check reservoir drainplug and valve for leaks.

a. Close valve.

b. Tighten plug.

Step 3. Check all hydraulic lines for leaks and breaks.

a. Tighten loose fittings.

b. Replace cracked, frayed, or leaking hoses. Notify your supervisor.

Step 4. Inspect hydraulic motor operation.

a. Check hydraulic reservoir for proper oil level (LO 9-2320-260-12).

b. If inoperable, notify your supervisor.

Step 5. Check power divider propeller shafts for breaks.

Replace if broken (para. 13-57, 13-58, or 13-59).

END OF TESTING!

DUMP BODY (M817)

WARNING

When dump body is in raised position, never work under dump body unless safety braces are properly positioned. Failure to do so may result in injury to personnel.

58. DUMP BODY WILL NOT RAISE

Step 1. Check hydraulic oil reservoir for proper level.

Fill to proper level if necessary (LO 9-2320-260-12).

Step 2. Check all hydraulic lines and control valve for leaks and damage.

a. Tighten loose fittings.

b. If damaged, notify your supervisor.

Step 3. Inspect pump housing for leaks and overheating with power takeoff engaged.

a. Tighten loose fittings.

b. Replace if overheating, notify your supervisor.

Step 4. Check for proper operation of safety latch.

Place dump control lever in lower position. If safety latch fails to disengage hoist, replace safety latch (para. 13-25).

END OF TESTING!

Table 2-2. Mechanical Troubleshooting (Contd).

MALFUNCTION TEST OR INSPECTION CORRECTWE ACTION

59. DUMP BODY DOES NOT HOLD IN RAISED POSITION

Step 1. Check hydraulic oil reservoir for proper level.
Fill to proper level if necessary (LO 9-2320-260-12).

Step 2. Check all hydraulic lines for leaks and breaks.
a. Tighten loose fittings.
b. If broken, notify your supervisor.

Step 3. Check control valve for leaks and damage.
a. Tighten loose fittings.
b. Replace if damaged, notify your supervisor.

END OF TESTING!

60. DUMP BODY WILL NOT LOWER

Perform malfunction 58.

END OF' TESTING!

61. TAILGATE DOES NOT OPEN

Check for bent or broken linkage.
Replace if bent of broken (para. 12-13).

END OF TESTING!

TRACTOR BODY (M818)

62. TRAILER WILL NOT HITCH TO FIFTH WHEEL

Step 1. Check fifth wheel for proper lubrication.
Lubricate if necessary (LO 9-2320-260-12).

Step 2. Inspect coupling jaws for bends and breaks.
Replace fifth wheel if coupling jaws are bent or broken (para. 10-14).

END OF TESTING!

EXPANSIBLE VAN BODY (M820, M820A1, M820A2)

63. SIDE PANELS HARD TO RETRACT OR EXPAND

Step 1. Check for dirt or other foreign material in sprocket assembly.
Clean and lubricate sprocket assembly (LO 9-2320-260-12).

Step 2. Check for dirt in rollers.
Clean dirt from rollers.

Step 3. Check operation of expanding and retracting mechanism(s).
Replace if defective. Notify your supervisor.

END OF TESTING!

64. SIDE PANEL CANNOT BE LOCKED IN RETRACTED POSITION

Step 1. Inspect edges of side panel to see if it is fully retracted.
Place heavy block of wood (2 in. x 4 in. or 4 in. x 4 in.) against edges of panel. Strike block – with heavy hammer.

Step 2. Inspect side panel locks for bent, worn, or damaged parts.
Replace bent, worn, or damaged parts (para. 12-26).

END OF TESTING!

Table 2-2. Mechanical Troubleshooting (Contd).

MALFUNCTION TEST OR INSPECTION CORRECTIVE ACTION

65. HINGED ROOF AND FLOOR PANELS CANNOT BE LOCKED IN FOLDED POSITION

Inspect roof panel lock for bent, worn, or damaged parts.

Replace bent, worn, or damaged parts (para. 12-27).

END OF TESTING!

66. VAN BODY NOT WATERPROOF OR LIGHTTIGHT

Step 1. Visually inspect lower part of side panel for tightness against van body.

Place heavy block of wood against rub rail at end of side panel where leak occurs. Strike block with heavy hammer.

Step 2. Check for sagging end panel.

Add rubber seal material to seal on outer edge of hinged roof until seal meets top edge of panel door.

Step 3. Check lip of block seal at inner rear corner of hinged roof to see if it is out of position.

Move side panel out to disengage corner block seal. Push seal lip up into correct position so end panel door properly engages when side panel is retracted.

Step 4. Check for loose or worn seals.

Replace worn seals (para. 12-25).

END OF TESTING!

67. DOOR LOCK WILL NOT OPERATE

Step 1. Check for jammed lock bolt.

If jammed, replace rear door lock assembly (para. 12-24).

Step 2. Check alinement of lock bolt and striker plate.

Add or remove shims behind lock until bolt properly engages striker plate (para. 12-24).

END OF TESTING!

68. HEATER WILL NOT IGNITE

WARNING

Diesel fuel is flammable. Do not perform this procedure near fire, flame, or sparks. Injury or death to personnel could result.

Step 1. Inspect heater fuel filter for dirty or clogged condition.

If fuel filter is dirty or clogged, notify your supervisor.

Step 2. Inspect heater fuel lines for loose connections, leaks, obstructions, or damage.

a. Tighten loose connections.

b. Replace leaking, obstructed, or damaged fuel lines (TM 9-243).

Step 3. Inspect heater fuel pump by draining and installing fuel filter bowl and turning heater switch to “HEATER”.

Replace defective heater fuel pump if fuel filter bowl does not fill with fuel. Notify your supervisor.

Step 4. Check electrical system (table 2-4, electrical troubleshooting, malfunction 38).

END OF TESTING!

Table 2-2. Mechanical Troubleshooting (Contd).

MALFUNCTION TEST OR INSPECTION CORRECTIVE ACTION

POWER LIFTGATE (M820A2)

69. LIFTGATE WILL NOT OPERATE

Step 1. Check hydraulic oil reservoir for proper level.

NOTE

Be sure platform is at ground level when checking or filling oil reservoir.

Fill to proper level (LO 9-2320-260-12).

Step 2. Visually inspect control linkage for damage.

Replace if damaged (para. 13-52).

Step 3. Check if power takeoff is engaged.

a. Engage power takeoff control (TM 9-2320-260-10).

b. If power takeoff does not engage or stay engaged, notify your supervisor.

Step 4. Check all hydraulic lines for leaks and breaks.

a. Tighten loose fittings.

b. If cracked, frayed, or leaking, notify your supervisor.

Step 5. Check hydraulic pump motor for cracks and leaks.

a. Tighten loose fittings.

b. Replace hydraulic pump motor if cracked or leaking (para. 13-51).

END OF TESTING!

70. PLATFORM STOPS BEFORE REACHING STOWED POSITION OR STOPS ABOVE BODY FLOOR WHEN RAISED FROM THE GROUND

Check for loose or bent lift frame adjusting bolt.

a. Tighten adjusting bolt.

b. If adjusting bolt is damaged, notify your supervisor.

END OF TESTING!

71. PLATFORM CLOSES AT ANGLE OTHER THAN STRAIGHT UP

Check closing kickout bolt for breaks and damage.

If kickout bolt is broken or damaged, notify your supervisor.

END OF TESTING!

72. LIFTGATE OPERATES SLOW OR JERKY

NOTE

Ensure platform is at ground level when checking or filling oil reservoir.

Step 1. Check oil reservoir for proper oil level.

Fill to proper level (LO 9-2320-260-12).

Step 2. Visually inspect moving parts for grease lubrication and damage.

a. Lubricate at grease points (LO 9-2320-260-12).

b. If damaged, notify your supervisor.

END OF TESTING!

Table 2-2. Mechanical Troubleshooting (Contd).

MALFUNCTION
TEST OR INSPECTION
CORRECTIVE ACTION

PERSONNEL HOT WATER HEATER KIT

73. PERSONNEL HOT WATER HEATER DOES NOT HEAT CAB

Step 1. Engine does not reach normal operating temperature (malfunction 19).

Step 2. Check personnel hot water heater for clogged, broken, and leaking inlet/outlet hoses,
Replace personnel hot water heater hoses if leaking or collapsed (para. 14-11).

Step 3. Check for proper operation of heater defroster and heater diverter vents and doors.
Replace control cables if bent or broken (para. 14-11).

Step 4. Check electrical system (table 2-4, electrical troubleshooting, malfunction 37).

Step 5. Check heater blower motor and fan for proper operation (TM 9-2320-260-10).
Replace personnel hot water heater if damaged (para. 14-10).

END OF TESTING!

PERSONNEL FUEL BURNING HEATER/POWER PLANT HEATER KIT

74. HEATER WILL NOT OPERATE

WARNING

Diesel fuel is flammable. Do not perform this procedure near fire, flame, or sparks. Injury or death to personnel could result.

Step 1. Check electrical system (table 2-4, electrical troubleshooting, malfunction 38).

Step 2. Check fuel shutoff valve for proper operation.
Replace fuel shutoff valve if damaged (or stuck in “OFT’” or partial “ON” position) (para. 14-5).

Step 3. Check fuel lines for breaks, bends, kinks, or leaking joints.
Replace fuel lines if broken, bent, kinked, or leaking (TM 9-243).

Step 4. Check fuel pump discharge.
a. Remove fuel line from fuel pump output (para. 14-4).
b. Use clean container for fuel discharge recovery.
c. Position heater control box to “RUN” position.
d. If fuel pump fails to pump adequate amount of fuel, (0.5 pt [0.219 L] in 30 seconds), replace (para. 14-4).

Step 5. Inspect exhaust system for restrictions.
If exhaust pipe is restricted or damaged, repair or replace (para. 14-6).

Step 6. Check for proper operation of defroster and heater diverter control cables (TM 9-2320-260-10).
If control cables or vent are broken, replace (para. 14-12).

Step 7. Replace fuel burning or power plant heater if fuel burning heater still fails to operate (para. 14-2 or 14-14).

END OF TESTING!

Section V. COMPRESSED AIR AND AIR-HYDRAULIC BRAKE SYSTEM TROUBLESHOOTING

2-13. GENERAL

a. This section provides troubleshooting information to diagnose and correct malfunctions which may develop in the compressed air and air-hydraulic brake system for the M809 series vehicles covered in this manual. Each symptom or malfunction given for an individual component or system is followed by a step(s) that should be taken to determine the cause and corrective action that must be performed to remedy the problem. The compressed air and air-hydraulic brake system is divided into the following functional systems:

- Parking Brake (page 2-90)
- Air-Hydraulic Brake System (page 2-90)
- Trailer Brakes (page 2-93)
- Compressed Air System (page 2-93)
- Air-Operated Accessories (page 2-94)

b. The compressed air and air-hydraulic brake system schematic (Appendix E of this manual) shows interrelationship of these systems and should be used as a reference when performing compressed air and air-hydraulic brake system troubleshooting.

Before taking any action to correct a possible malfunction, the following rules should be followed:

(1) Question operator to obtain information that might help determine the cause of the problem.

(2) Never overlook the chance that the problem could be of a simple nature. The problem could be corrected with only a minor adjustment.

(3) Use all senses to observe and locate troubles.

(4) Use test instruments or gages to help determine and isolate problems.

(5) Always isolate system where malfunction occurs and then locate defective component.

(6) Use standard automotive theories and principles when troubleshooting vehicles covered in this manual.

(7) Park vehicle on level surface and chock wheels before starting brake system troubleshooting.

(8) Always wear safety glasses when troubleshooting the compressed air system.

c. Table 2-3 lists possible malfunctions that may occur in the vehicle or individual units of the vehicle. This table covers troubleshooting procedures for the compressed air and air-hydraulic brake system only. Troubleshooting procedures for the mechanical and electrical systems can be found in Chapter 2 of this manual. Keep in mind that there may be minor differences between vehicles.

COMPRESSED AIR AND AIR-HYDRAULIC BRAKE SYSTEM TROUBLESHOOTING SYMPTOM INDEX

MALFUNCTION NO.	MALFUNCTION	TROUBLESHOOTING PROCEDURE PAGE
	PARKING BRAKE	
1.	Parking brake does not hold vehicle..	2-90
2.	Parking brake drags and/or overheats	2-90
	AIR-HYDRAULIC BRAKE SYSTEM	
3.	Insufficient brakes (no apparent air system failure, air gage at normal pressure, warning buzzer not sounding).	2-90
4.	Brakes drag (one wheel)	2-91
5.	Brakes drag (all wheels)	2-91
6.	Brake system does not operate properly when brakes are applied or released	2-92
7.	Uneven braking	2-92
8.	Noisy brakes	2-92
9.	Vehicle pulls to one side when braking.	2-92
	TRAILER BRAKES	
10.	Trailer brakes do not operate (M818, M819).	2-93
	COMPRESSED AIR SYSTEM	
11.	Air pressure does not build to normal operating pressure (low air pressure buzzer sounds continuously).	2-93
12.	Air pressure rises above normal operating pressure	2-94
13.	Air pressure gage indicates low or no air pressure (low air pressure warning buzzer does not sound)	2-94
14.	Air pressure gage indicates normal operating pressure (low air pressure buzzer does not shut off	2-94
	AIR-OPERATED ACCESSORIES	
15.	Windshield wipers inoperative or operate slowly (air gage at normal operating pressure)	2-94
16.	Air horn does not work	2-95

WARNING

Do not use compressed air or dry brush for cleaning when working in areas of vehicle where asbestos brake lining dust may accumulate. Remove asbestos dust and other residue from these areas using a soft bristle brush or cloth soaked with water. Breathing asbestos dust may cause injury to personnel.

Table 2-3. Compressed Air and Air-Hydraulic Brake System Troubleshooting.

MALFUNCTION TEST OR INSPECTION CORRECTIVE ACTION

PARKING BRAKE

1. PARKING BRAKE DOES NOT HOLD VEHICLE

Step 1. Check parking brake lever position.
If partially applied, pull to full brake position (TM 9-2320-260-10).

Step 2. Check parking brake adjustment (para. 8-5).
If adjustment does not solve problem, perform step 5.

Step 3. Inspect parking brake cable for binding or breaks.
Replace parking brake cable if bound or broken (para. 8-3).

Step 4. Check parking brakeshoe lever movement.
a. Direct assistant to pull and release parking brake lever (TM 9-2320-260-10).
b. If parking brakeshoe lever movement is restricted, lubricate brakeshoe lever as required LO 9-2320-260-12).
c. Replace parking brakeshoe lever if restricted movement continues (para. 8-2).

Step 5. Inspect parking brakeshoes for wear, contamination, and damage.
Replace parking brakeshoes if worn, contaminated, or damaged (para. 8-4).

Step 6. Check parking brakedrum for wear and damage.
Replace parking brakedrum if worn or damaged (para. 8-6).

END OF TESTING!

2. PARKING BRAKE DRAGS AND/OR OVERHEATS

Step 1. Check parking brake lever position.
If applied, fully disengage parking brake (TM 9-2320-260-10).

Step 2. Inspect parking brake cable for binding, kinks, and breaks.
Replace parking brake cable if bound, kinked, or broken (para. 8-3).

Step 3. Check parking brake adjustment (para. 8-5).
If adjustment does not solve problem, perform step 3.

Step 4. Inspect brakeshoe lever retracting spring for wear and damage.
Replace lever retracting spring if worn or darnaged (para. 8-4).

Step 5. Check parking brakeshoe lever adjustment.
a. Direct assistant to pull and release parking brake lever (TM 9-2320-260-10).
b. If parking brakeshoe lever movement is restricted, lubricate brakeshoe lever as required (LO 9-2320-260-12).
c. Replace parking brakeshoe lever if restricted movement continues (para. 8-4).

END OF TESTING!

AIR-HYDRAULIC BRAKE SYSTEM

3. INSUFFICIENT BRAKES (NO APPARENT AIR SYSTEM FAILURE, AIR GAGE AT NORMAL PRESSURE, WARNING BUZZER NOT SOUNDING)

Step 1. Check service brake adjustment (para. 8-9).
If adjustment does not solve problem, perform step 2.

Step 2. Inspect service brakeshoes for wear.
Replace brakeshoes if worn (para. 8-8).

Table 2-3. Compressed Air and Air-Hydraulic Brake System Troubleshooting (Contd).

MALFUNCTION
TEST OR INSPECTION
CORRECTIVE ACTION

Step 3. Refer to malfunction 11 for insufficient or loss of air pressure.

Step 4. Check for leaks in brake lines.

a. Direct assistant to pump brakes.

b. If brake lines are leaking or darnaged, replace brake lines as required.

Step 5. Check for defective master cylinder.

a. Direct assistant to pump brakes.

b. Check master cylinder for leaks.

c. Remove dust boot from master cylinder.

If brake fluid leaks from dust boot area, replace master cylinder (para. 8-11).

Step 6. Check for defective air-hydraulic cylinder.

Replace air-hydraulic cylinder if insufficient braking continues after performing steps 1 through 5 (para. 8-14).

END OF TESTING!

4. BRAKES DRAG (ONE WHEEL)

Step 1. Check service brake adjustment (para. 8-9).

If adjustment does not solve problem, perform step 2,

Step 2. Remove wheel, hub, and service brakedrum (para. 9-4 or 9-5).

Step 3. Check for defective wheel cylinder.

a. Inspect wheel cylinder for leaks and darnage.

b. Replace wheel cylinder if leaking or damaged (para. 8-10).

Step 4. Check service brakeshoes for contamination.

Replace brakeshoes if contaminated by leaking brake fluid (para. 8-8).

Step 5. Check for restricted or darnaged brake line.

Clean or replace brake line if restricted or damaged.

END OF TESTING!

5. BRAKES DRAG (ALL WHEELS)

Step 1. Check brake pedal free travel (para. 8-17).

Adjust as necessary (para. 8-17).

Step 2. Check service brake adjustment (para 8-9).

If adjustment does not solve problem, perform step 3.

Step 3. Check for restricted or damaged brake line(s).

Clean or replace brake line(s) if restricted or darnaged.

Step 4. Check for defective master cylinder.

a. Direct assistant to pump brakes.

b. Check master cylinder for leaks.

c. Remove dust boot horn master cylinder.

Replace master cylinder if brake fluid leaks from dust boot area (para. 8-11).

Step 5. Check for defective air-hydraulic cylinder.

Replace air-hydraulic cylinder if brake drag continues after performing steps 1 through 4 (para. 8-14).

END OF TESTING!

Table 2-3. Compressed Air and Air-Hydraulic Brake System Troubleshooting (Contd).

MALFUNCTION TEST OR INSPECTION CORRECTIVE ACTION

6. BRAKE SYSTEM DOES NOT OPERATE PROPERLY WHEN BRAKES ARE APPLIED OR RELEASED

Step 1. Check master cylinder fluid level (LO 9-2320-260-12).
If fluid level is low, fill to proper level.

Step 2. Bleed service brake system (para. 8-15).

Step 3. Check for restricted or damaged brake lines.
Clean or replace brake lines if restricted or damaged.

Step 4. Refer to malfunction 11 for insufficient or loss of air pressure.

Step 5. Check for defective wheel cylinder.
a. Inspect wheel cylinder for leaks and damage.
b. Replace wheel cylinder if leaking or damaged (para. 8-10).

Step 6. Check service brakeshoes for contamination.
Replace brakeshoes if contaminated by leaking brake fluid (para. 8-8).

Step 7. Check for defective master cylinder.
a. Direct assistant to pump brakes.
b. Check master cylinder for leaks.
c. Remove dust boot from master cylinder.
Replace master cylinder if brake fluid leaks from dust boot area (para. 8-11).

Step 8. Check for defective air-hydraulic cylinder.
Replace air-hydraulic cylinder if brake system continues to operate improperly after performing steps 1 through 7 (para. 8-14).

END OF TESTING!

7. UNEVEN BRAKING

Step 1. Check service brake adjustment (para. 8-9).
If adjustment does not solve problem, perform step 2.

Step 2. Check service brakeshoes for wear, contamination, and darnage.
Replace service brakeshoes if worn, contaminated, or damaged (para. 8-8).

END OF TESTING!

8. NOISY BRAKES

Step 1. Check service brakeshoes for wear, contamination, and damage.
Replace service brakeshoes if worn, contaminated, or damaged (para. 8-8).

Step 2. Inspect service brakedrum for scrapes, scores, and uneven wear.
a. Replace brakedrum if scraped or scored more than 0.031 in. (0.79 mm) (para. 9-4 or 9-5).
b. Notify your supervisor if brakedrum is scraped or scored less than 0.031 in. (0.79 mm) or worn unevenly.

END OF TESTING!

9. VEHICLE PULLS TO ONE SIDE WHEN BRAKING

NOTE

Vehicle pulling to one side indicates a malfunction in one of the two front wheel service brakes.

Table 2-3. Compressed Air and Air-Hydraulic Brake System Troubleshooting (Contd).

MALFUNCTION
TEST OR INSPECTION
CORRECTIVE ACTION

Step 1. Check tire air pressure (TM *9-2320-260-10).*
If tire air pressure is low, fill to proper level as required.
Step 2. Check for dragging brakes (malfunction 4 or 5).
END OF TESTING!

TRAILER BRAKES

10. TRAILER BRAKES DO NOT OPERATE (M818, M819)

Step 1. Start engine (TM 9-2320-260-10). Allow time for air pressure to build.
If pressure does not build, refer to malfunction 11.
Step 2. Check air lines for signs of leaks and restrictions.
Clean or replace air lines as required.
Step 3. Check trailer-to-trailer hoses for signs of leaking.
Tighten hose connection or replace as necessary
Step 4. Check hand control valve operation.
Replace hand control valve if defective (para. 8-23).
END OF TESTING!

COMPRESSED AIR SYSTEM

11. AIR PRESSURE DOES NOT BUILD TO NORMAL OPERATING PRESSURE (LOW AIR PRESSURE BUZZER SOUNDS CONTINUOUSLY)

Step 1. Direct assistant to start engine (TM 9-2320-260-10).

NOTE

Refer to TM 9-2320-260-10 for location of auxiliary compressed air system components.

Step 2. Check for open or leaking air reservoir drain valve.
Close drain valve if open. Tighten or replace if leaking continues.
Step 3. Check for open or leaking front and rear air couplings.
Close air couplings if open. Tighten or replace if leaking continues (para. 8-22).
Step 4. Check for open or leaking trailer air coupling shutoff valves.
Close shutoff valves if open. Tighten or replace if leaking continues (para. 8-26).
Step 5. Check for open or leaking auxiliary air supply valve.
Close air supply valve if open. Tighten or replace if leaking continues (para. 8-20).
Step 6. Check air lines for leaks or damage.
Tighten air line fittings if loose, or replace darnaged air lines as necessary.
Step 7. Check for defective air compressor governor with engine running.
a. Loosen and bleed air from air compressor governor to compressor air line.
b. Check compressor outlet line for heat (high pressure).
If outlet line is not warm to touch, continue testing.

Table 2-3. Compressed Air and Air-Hydraulic Brake System Troubleshooting (Contd).

MALFUNCTION TEST OR INSPECTION CORRECTIVE ACTION

WARNING

Loosen outlet line at air compressor very slowly. Stop procedure and tighten the moment air begins to escape. Injury to personnel may result if line is accidently disconnected from a serviceable operating compressor.

c. Carefully loosen outlet line from air compressor until air can be heard escaping.

If no air is heard escaping from air compressor, perform step 8.

Step 8. Check air compressor governor adjustment (para. 8-25).

If adjustment does not solve problem, replace governor (para. 8-25) and retest air compressor. If air compressor is still not functioning, notifiy your supervisor.

END OF TESTING!

12. AIR PRESSURE RISES ABOVE NORMAL OPERATING PRESSURE

Step 1. Check air compressor governor adjustment (para. 8-25).

If adjustment does not solve problem, replace air compressor governor (para. 8-25).

Step 2. Check for defective unloading valve.

If air pressure rises above normal operating pressure, but valve does not open to release pressure, notify your supervisor.

END OF TESTING!

13. AIR PRESSURE GAGE INDICATES LOW OR NO AIR PRESSURE (LOW AIR PRESSURE WARNING BUZZER DOES NOT SOUND)

Step 1. Check for loose, restricted, and damaged air lines.

Tighten air lines if loose. Replace restricted or damaged air lines as necessary.

Step 2. Check for defective air gage.

Replace air gage if defective (para. 4-9).

END OF TESTING!

14. AIR PRESSURE GAGE INDICATES NORMAL OPERATING PRESSURE (LOW AIR PRESSURE WARNING BUZZER DOES NOT SHUT OFF)

Check for defective low air pressure buzzer (table 2-4, electrical troubleshooting, malfunction 34).

Replace low air pressure buzzer if defective (para. 4-23).

END OF TESTING!

AIR-OPERATED ACCESSORIES

15. WINDSHIELD WIPERS INOPERATIVE OR OPERATE SLOWLY (AIR GAGE AT NORMAL OPERATING PRESSURE)

Step 1. Start engine (TM 9-2320-260-10) and allow air pressure to build up to normal operating pressure.

Step 2. Operate windshield wipers and inspect lines and hoses for leaks.

a. If air leaks are found, repair as required.

b. If not air leaks are found, perform test 1.

Test 1. Check windshield wiper motor supply line (1) pressure.

Step 1. Compress clamp (2) and disconnect windshield wiper motor supply line (1) from tee (9).

Step 2. Install adapter (3) on test gage (4).

Table 2-3. Compressed Air and Air-Hydraulic Brake System Troubleshooting (Contd).

MALFUNCTION TEST OR INSPECTION CORRECTIVE ACTION

Step 3. Connect windshield wiper motor supply line (1) to adapter (3) with clamp (2).

Step 4. Start engine (TM 9-2320-260-10) and allow air pressure to build to normal operating pressure.

Step 5. Operate windshield wipers to full on position (TM 9-2320-260-10).

Step 6. Check reading on test gage (49.

a. If reading is lower than 55 psi (379 kPa), replace windshield wiper valve (para. 11-38).

b. If reading is 55 psi (379 kPa), perform test 2.

Test 2. Check windshield wiper motor (6) for clogs.

Step 1. Remove clamp (7) and hose (8) from windshield wiper motor (6).

Step 2. Using wire, clean orifice (5) on windshield wiper motor (6).

Step 3. Install hose (8) and clamp (7) on windshield wiper motor (6).

Step 4. Start engine (TM 9-2320-260-10) and allow air pressure to build up to normaloperating pressure.

Step 5. Operate windshield wipers (TM 9-2320-260-10). If windshield wipers are still inoperative, replace defective windshield wiper motor(s) (5) (para. 11-37).

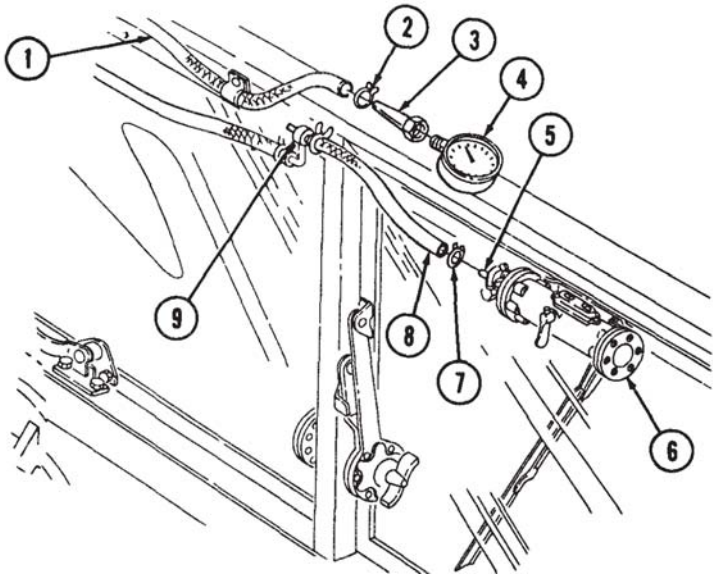

END OF' TESTING!

16. AIR HORN DOES NOT WORK

Step 1. Perform malfunction 35, table 2-5.

Step 2. If malfunction still exists, refer to malfunction 11, steps 1-8.

NOTE

Air gage on instrument panel has a maximum pressure scale of 120 psi (4 kPa). If old governor has been replaced with new governor, air pressure may exceed maximum pressure reading on instrument panel.

If air gage on instrument panel indicates proper air pressure, replace air horn (para. 4-30).

END OF TESTING!

Section VI. ELECTRICAL SYSTEMS TROUBLESHOOTING

2-14. GENERAL

a. This section provides information to diagnose and correct malfunctions of the electrical systems. Because of its complexity, the electrical system is divided into the following functional systems:

- Battery System (page 2-99)
- Starting System (page 2-102)
- Charging System (60 amp) (page 2-113)
- Charging System (100 amp) (page 2-118)
- Lighting System (page 2-124)
- Indicators, Gages, and Warning System (page 2-152)
- Heating System (page 2-167)
- Brake System (M816, M819, M821) (page 2-178)
- Auxiliary Power Systems (page 2-181)
- Trailer Connection System (page 2-184)

b. The wiring schematic (Appendix E of this manual) shows the interrelationship of these systems and should be used as a reference when performing electrical troubleshooting (table 2-4).

c. Use Fuel and Electrical Repair Kit, SC 5180-95-CL-B08, when replacing or repairing electrical wires and connectors.

d. Each malfunction symptom given for an individual component or system is followed by a step(s) that should be taken to determine cause and corrective action that must be taken to remedy the problem.

e. Before taking any action to correct a possible malfunction, the following rules should be followed:

(1) Question operator to obtain information that might help determine the cause of the problem.

(2) Never overlook the chance that the problem could be of simple origin. The problem could be corrected with minor adjustment.

(3) Use all senses to observe and locate troubles.

(4) Use all recommended test instruments or gages to help determine and isolate the problem.

(5) Always isolate the system where the malfunction occurs and then locate the defective component.

(6) Use standard automotive theories and principles when troubleshooting the vehicles covered in this manual.

f. Table 2-4 lists electrical malfunctions that may occur in individual systems of the vehicle. This table covers electrical troubleshooting only. Troubleshooting procedures for the mechanical systems can be found in table 2-2, section IV.

g. The following warnings apply to all malfunctions listed in electrical troubleshooting (table 2-4) and shall be adhered to:

WARNING

- Battery acid (electrolyte) is extremely harmful. Always wear safety goggles and rubber gloves, and do not smoke when performing battery maintenance. Severe injury will result if acid contacts eyes or skin.
- Remove all jewelry such as rings, dog tags, bracelets, etc. If jewelry or disconnected battery ground cable contact battery terminal, a direct short can result, causing instant heating of tools, severe injury to personnel, or damage to equipment.
- When removing battery cables, disconnect ground cable first. Do not allow tools to come in contact with vehicle when disconnecting cable clamps. A direct short can result, causing instant heating of tools, injury to personnel, tool damage, battery damage, or battery explosion.
- Some vehicles have two separate wires and connectors. Mark wires for installation. Connecting wires on wrong terminals may cause fuel to ignite, resulting in injury to personnel.
- Do not perform battery system checks or inspection near open flame. Injury to personnel may result.
- Do not perform testing near fuel tank with fill cap or sending tank removed. Fuel may ignite, causing injury to personnel.

2-15. TEST EQUIPMENT

In troubleshooting the electrical system, multimeters will be used to make resistance or continuity tests and voltage or low ampere current tests. Multimeters maybe found in the Common No. 1 or No. 2 Organizational Maintenance Automotive Shop Sets.

ELECTRICAL TROUBLESHOOTING SYMPTOM INDEX

MALFUNCTION NO.	MALFUNCTION	TROUBLESHOOTING PROCEDURE PAGE
	BATTERY SYSTEM	
1.	All vehicle electrical systems inoperative	2-99
	STARTING SYSTEM	
2.	Starter will not crank	2-102
3.	Starter motor operates, but engine cranks slowly	2-110
4.	Starter motor operates, but engine will not start	2-112
	CHARGING SYSTEM (60 AMP)	
5.	No alternator output (voltmeter in left-hand red)	2-113
6.	Batteries not charging properly (voltmeter in yellowor right-hand red)	2-117
7.	Batteries hot or boiling, corrected specific. gravity of all cells is 1.280	2-117
8.	Batteries use excessive water....	2-17
9.	Batteries rundown inoperation	2-117
	CHARGING SYSTEM (100 AMP)	
10.	No alternator output (voltmeter in left-hand red)	2-118
11.	Batteries not charging properly (voltmeter in yellow or right-hand red)	2-123
12.	Batteries hot or boiling, corrected specific gravity of all cells is 1.280	2-123
13.	Batteries use excessive water....	2-123
14.	Batteries rundown inoperation	2-123
	LIGHTING SYSTEM	
15.	Headlight does not operate on low or high beam, or both headlights inoperative	2-125
16.	Front marker lampdoesnotlight	2-128
17.	Taillight or clearance lamp does not light	2-129
18.	Stoplight lamp does not light	2-130
19.	Blackout headlamp does not light	2-131
20.	Front blackout marker lamp does not light	2-132
21.	Blackout taillight lamp does not light	2-133
22.	Blackout stoplight lamp does not light	2-134
23.	Directional signal inoperative	2-135
24.	All stoplights are inoperative	2-138
25.	Both directional signals inoperative	2-139
26.	Turn signals operate incorrectly with turn signal control lever inoneor more positions	2-140
27.	One or more floodlights do not operate	2-141
28.	Warning lamp fails cooperate	2-148

ELECTRICAL TROUBLESHOOTING SYMPTOM INDEX (Contd)

MALFUNCTION NO.	MALFUNCTION	TROUBLESHOOTING PROCEDURE PAGE
	INDICATORS, GAGES, AND WARNING SYSTEM	
29.	Allgages inoperative	2-152
30.	Coolant temperature gage inoperative	2-153
31.	Fuelgage inoperative	2-155
32.	Voltmeter gage inoperative	2-159
33.	Tachograph lamps fail to operate	2-160
34.	Low air pressure warning system inoperative	2-162
35.	Horn does not operate	2-164
	HEATING SYSTEMS	
36.	Cold start system fails to preheat	2-167
37.	Hot water personnel heater does not operate or doesnot operate inlowposition	2-173
38.	Personnel fuel burning heater inoperative	2-175
39.	Heater control box light inoperative, but heater operative	2-177
	BRAKE SYSTEM (M816, M819, M821)	
40.	Vehicle rolls during winching operations	2-178
	AUXILIARY POWER SYSTEMS	
41.	Auxiliary power receptacle fails to operate (M816, M819, and M821)	2-181
42.	Vehicle fails to jump start using battery slave receptacle	2-183
	TRAILER CONNECTION SYSTEM	
43.	Oneormore trailer lights inoperative	2-184

Table 2-4. Electrical Troubleshooting.

MALFUNCTION TEST OR INSPECTION CORRECTIVE ACTION

BATTERY SYSTEM

1. ALL VEHICLE ELECTRICAL SYSTEMS INOPERATIVE

NOTE

If STE/ICE is available, perform NG20 – no crank-no start tests (chapter 2, section VII).

Step 1. Loosen two holddown latches and remove battery cover. Visually check connections of battery cables.

Ensure battery cables are correctly connected to batteries (Appendix E).

Step 2. Visually check batteries for cracks and leaks. Check terminal posts for corrosion and breaks.

a. Replace any battery that is cracked, leaking, or has broken terminal posts (para. 4-49).

b. If terminal posts or cable clamps are corroded, use soda and water solution to neutralize battery acid. Remove battery ground cable 68-7 from negative post first. Remove cable clamps from battery posts and clean post and clamps. Install cable clamps on posts.

c. If battery terminals are clean and malfunction still exists, proceed to test 1.

Test 1. Check specific gravity of each cell before adding distilled water.

Step 1. Using optical battery tester which requires no temperature compensation, check specific gravity of electrolyte in each cell (TM 9-6140-200-14).

If specific gravity of any cell is below 1.225, battery must be replaced or recharged. Add distilled water as necessary after checking battery. For charging procedures, refer to TM 9-6140-200-14.

Step 2. Check specific gravity of cells after battery has been charged (TM 9-6140-200-14).

a. Replace battery if specific gravity of any cell does not increase to 1.280 (full charge) in 25 hours of charging (para. 4-49).

b. Each cell in a battery must test within 0.025 points of the others. Replace battery if specific gravity of any cell is lower than 1.255 (corrected to 90°F (32°C) if necessary) after 25 hours of charging (para. 4-49).

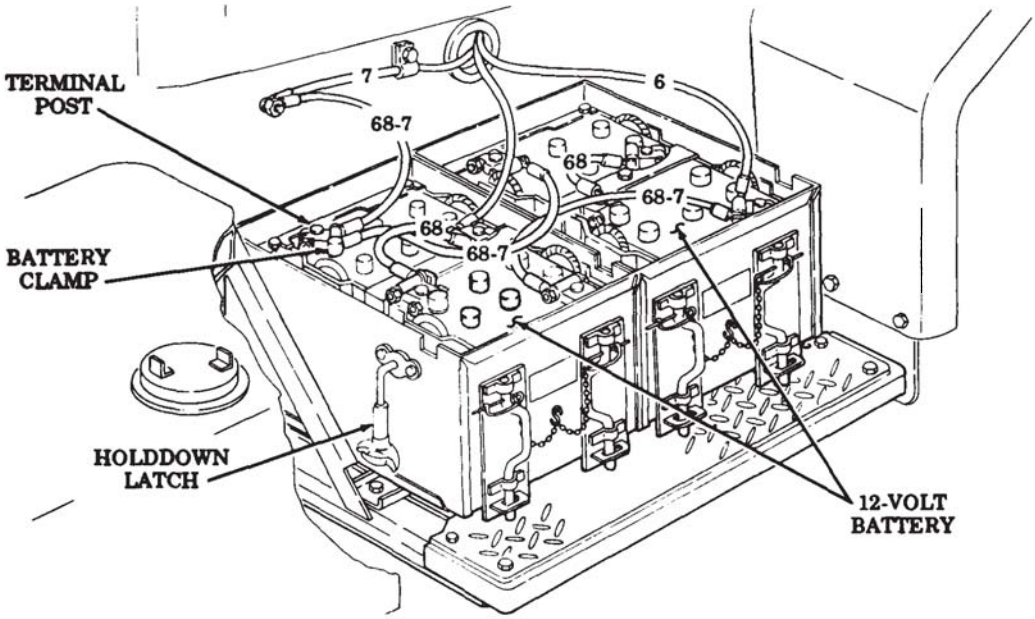

Table 2-4. Electrical Troubleshooting (Contd).

MALFUNCTION TEST OR INSPECTION CORRECTIVE ACTION

Test 2. Test batteries for voltage.

Step 1. Set multimeter to a range that will measure 24 volts.

Step 2. Touch positive lead of multimeter to contact end of battery terminal for lead 6 at battery.

Step 3. Touch negative lead of multimeter to contact end of battery terminal for lead 68-7 at frame ground. Voltage should be present.

If voltage is not present, go to test 3.

Test 3. Check continuity of battery cables.

Step 1. Disconnect all battery cables from all points of contact at batteries (para. 4-48).

Step 2. Set multimeter to RXl scale.

Step 3. Touch positive lead of multimeter to contact end of cable 68-7 at frame ground.

Step 4. Touch negative lead of multimeter to contact end of cable 68-7. Continuity should be present.

a. Repair or replace battery cable if resistance is greater than 1 ohm (para. 4-48).

b. Repair or replace battery cable if insulation is worn or frayed (para. 4-48).

Step 5. Touch positive lead of multimeter to contact end of cable 569.

Step 6. Touch negative lead of multimeter to frame ground. Continuity should be present.

a. Repair or replace battery cable if resistance is greater than 1 ohm (para. 4-48).

b. Repair or replace battery cable if insulation is worn or frayed (para. 4-48).

Step 7. Touch positive lead of multimeter to contact end of cable 6.

Step 8. Touch negative lead to multimeter to frame ground. Continuity should be present.

a. Repair or replace battery cable if resistance is greater than 1 ohm (para. 4-48).

b. Repair or replace battery cable if insulation is worn or frayed (para. 4-48).

Step 9. Touch positive lead of multimeter to contact end of cable 7.

Step 10. Touch negative lead of multimeter to frame ground. Continuity should be present.

a. Repair or replace battery cable if resistance is greater than 1 ohm (para. 4-48).

b. Repair or replace battery cable if insulation is worn or frayed (para. 4-48).

Step 11. Touch positive lead of multimeter to contact end of second cable 68-7.

Step 12. Touch negative lead of multimeter to opposite end of cable 68-7. Continuity should be present.

Step 13. Touch positive lead of multimeter to contact end of cable 68.

Step 14. Touch negative lead of multimeter to opposite end of cable 68. Continuity should be present.

Step 15. Repeat steps 13 and 14 for second cable 68.

a. If continuity is present, go to test 4.

b. Repair or replace battery cable if resistance is greater than 1 ohm (para. 4-48).

c. Repair or replace battery cable if insulation is worn or frayed (para 4-48).

Test 4. Check for battery voltage at starter solenoid.

Step 1. Set multimeter to a range that will measure 24 volts.

Step 2. Touch positive lead of multimeter to contact end of battery cable 6 at starter solenoid.

Step 3. Touch negative lead of multimeter to frame ground. Voltage should be present.

If battery voltage is not present, clean starter solenoid connections for cable 6.

Table 2-4. Electrical Troubleshooting (Contd).

MALFUNCTION TEST OR INSPECTION CORRECTIVE ACTION

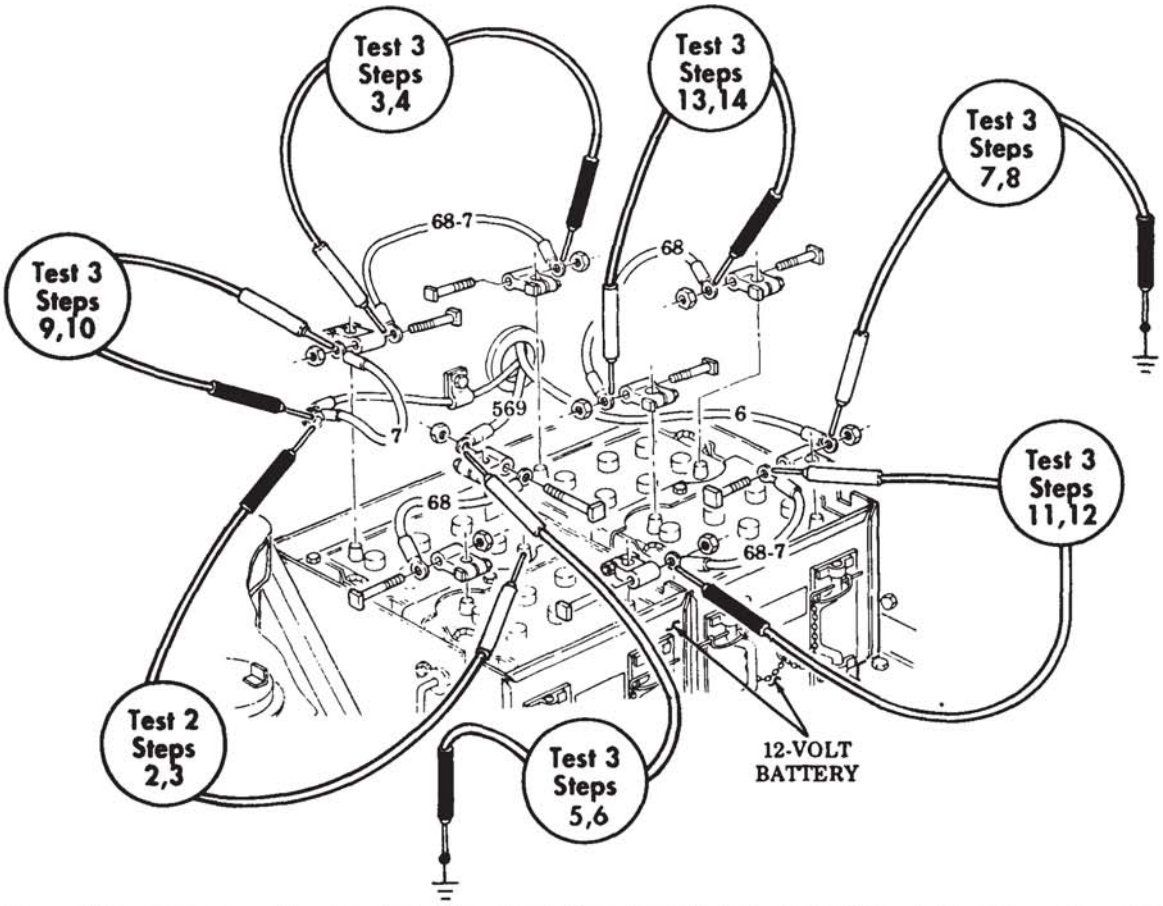

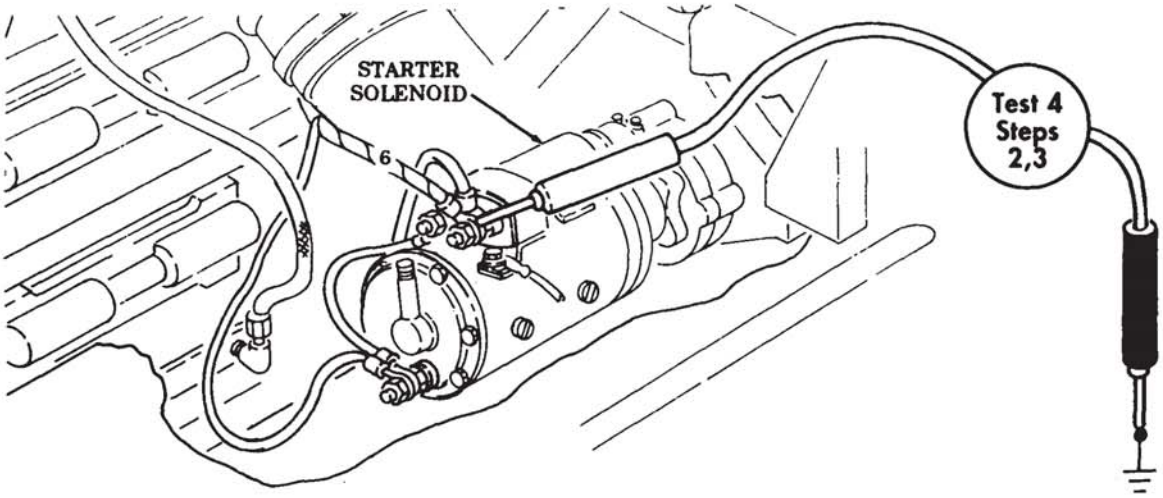

END OF TESTING!

Table 2-4. Electrical Troubleshooting (Contd).

MALFUNCTION TEST OR INSPECTION CORRECTIVE ACTION

STARTING SYSTEM

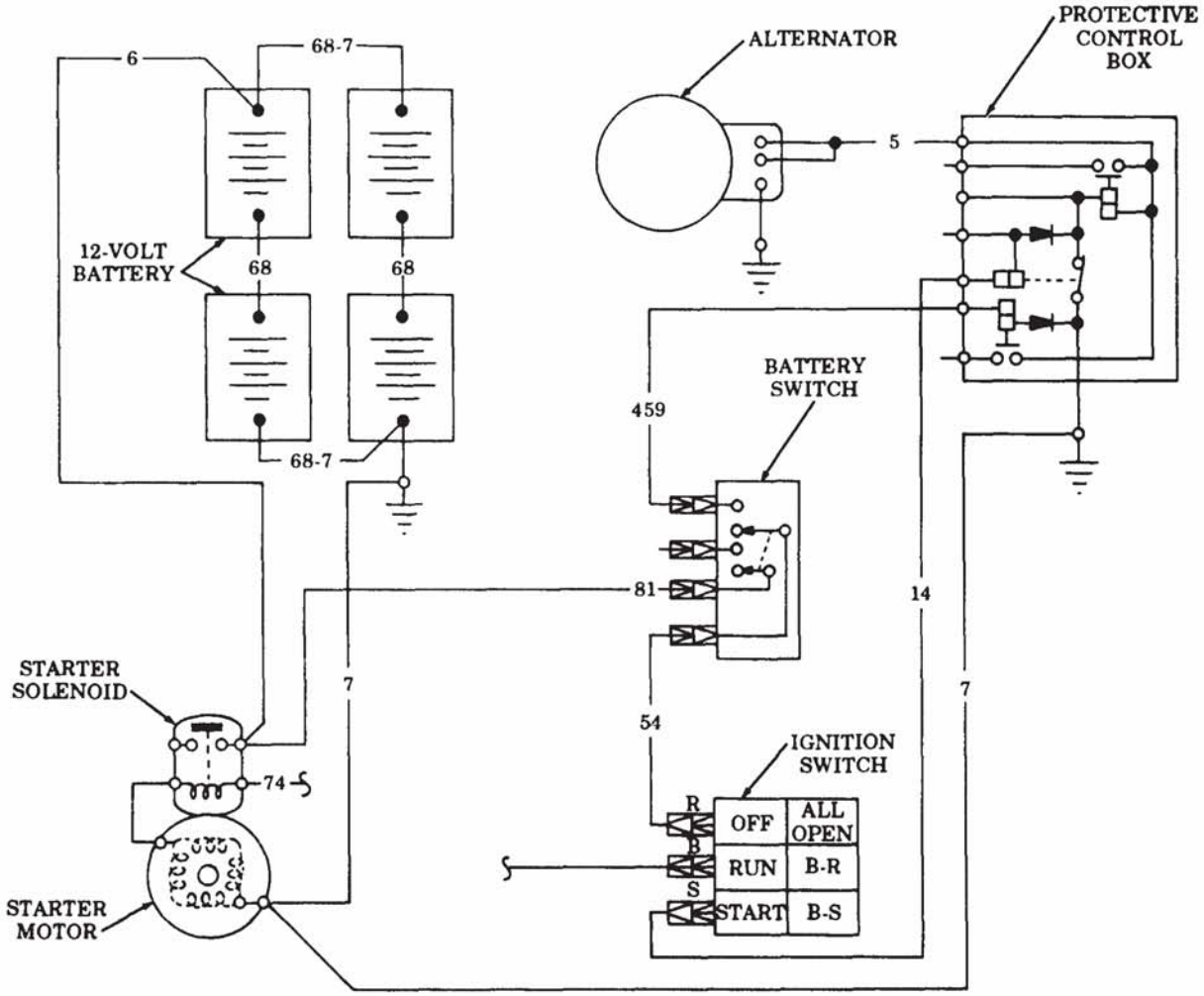

2. STARTER WILL NOT CRANK

NOTE

- Ensure transmission is in neutral.
- If STE/ICE is available, perform NG20 – no crank-no start tests (chapter 2, section VII).

Check batteries and cables (malfunction 1).

Table 2-4. Electrical Troubleshooting (Contd).

MALFUNCTION TEST OR INSPECTION CORRECTIVE ACTION

Test 1. Check for battery voltage at starter.

Step 1. Position battery switch to ON position.

Step 2. Turn and hold ignition switch to START position. Solenoid should thump.

a. If solenoid is heard, go to step 3.

b. If solenoid is not heard, go to step 6.

Step 3. Set multimeter to a range that will measure 24 volts.

Step 4. Touch positive lead of multimeter to contact end of lead 6 at starter solenoid.

Step 5. Touch negative lead of multimeter to frame ground. Voltage should be present.

a. If voltage is present, but less than 19 volts, check for corrosion and/or loose connections.

b. If voltage is present and engine still fails to start, go to step 6.

Step 6. Touch positive lead of multimeter to contact end of lead 74 at starter motor.

Step 7. Touch negative lead of multimeter to frame ground. Voltage should be present.

a. If voltage is present, go to test 2.

b. If voltage is not present, go to test 3.

Test 2. Check for seized engine.

a. Refer to Mechanical Troubleshooting, table 2-2, malfunction 1.

b. Replace starter if engine is not seized (para. 4-5).

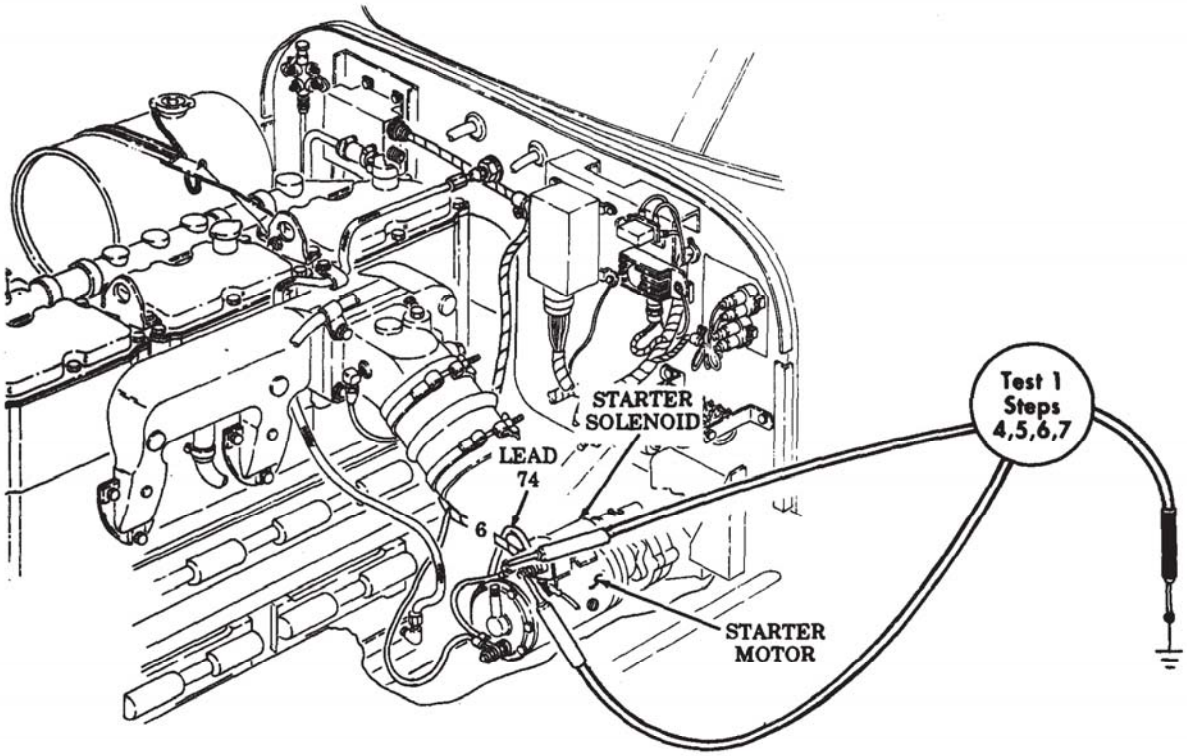

Table 2-4. Electrical Troubleshooting (Contd).

MALFUNCTION TEST OR INSPECTION CORRECTIVE ACTION

Test 3. Test starter lockout ground circuit.
Step 1. Set multimeter to RX1 scale.
Step 2. Disconnect harness connector at protective control box.
Step 3. Touch positive lead of multimeter to lead 93 (pin F) at harness connector.
Step 4. Touch negative lead of multimeter to frame ground. Continuity should be present.
a. If continuity is present, go to test 6.
b. If continuity is not present, go to test 4.

Test 4. Test continuity of lead 93.
Step 1. Disconnect lead 93 at oil pressure starter lockout switch.
Step 2. Disconnect wiring harness at protective control box.
Step 3. Set multimeter to RX1 scale.
Step 4. Touch positive lead of multimeter to contact end of lead 93 at lockout switch.
Step 5. Touch negative lead of multimeter to pin F at protective control box wiring harness. Continuity should be present.
a. If continuity is present, go to test 5.
b. Repair or replace lead if continuity is not present (para. 4-52).

Test 5. Test continuity of lockout switch.
Step 1. Remove oil pressure starter lockout switch (para. 4-19).
Step 2. Set multimeter to RX1 scale.
Step 3. Touch positive lead of multimeter to contact end of lockout switch.
Step 4. Touch negative lead of multimeter to frame ground.
a. If continuity is present, go to test 6.
b. Replace oil pressure starter lockout switch if continuity is not present (para. 4-19).

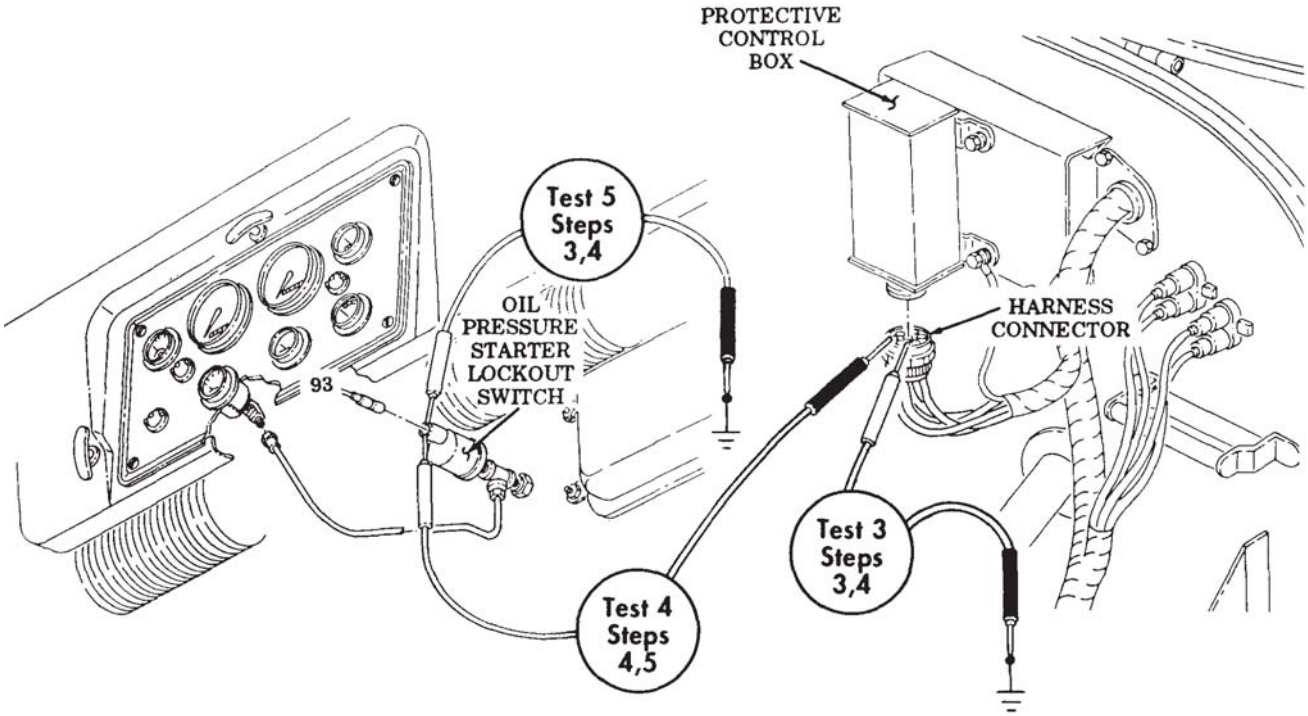

Table 2-4. Electrical Troubleshooting (Contd).

MALFUNCTION TEST OR INSPECTION CORRECTIVE ACTION

Test 6. Test starter circuit for battery voltage into protective control box.

Step 1. Disconnect wiring harness at protective control box.

Step 2. Set multimeter to a range that will measure 24 volts.

Step 3. Position battery switch to ON position.

Step 4. Position ignition switch to RUN position.

Step 5. Touch positive lead of multimeter to lead 459 (pin A) at wiring harness.

Step 6. Touch negative lead of multimeter to frame ground. Voltage should be present.

a. If voltage is present, go to test 7.

b. If voltage is not present, go to test 9.

Step 7. Touch positive lead of multimeter to lead 14 (pin E). Voltage should be present.

a. If voltage is present, go to test 7.

b. If voltage is not present, go to test 10.

Step 8. Touch positive lead of multimeter to lead 81 (pin C).

a. If voltage is present, go to test 7.

b. If voltage is not present, check continuity of lead 81.

NOTE

If voltage is not present at all leads/pins tested, a bad ground circuit exists. Go to test 8.

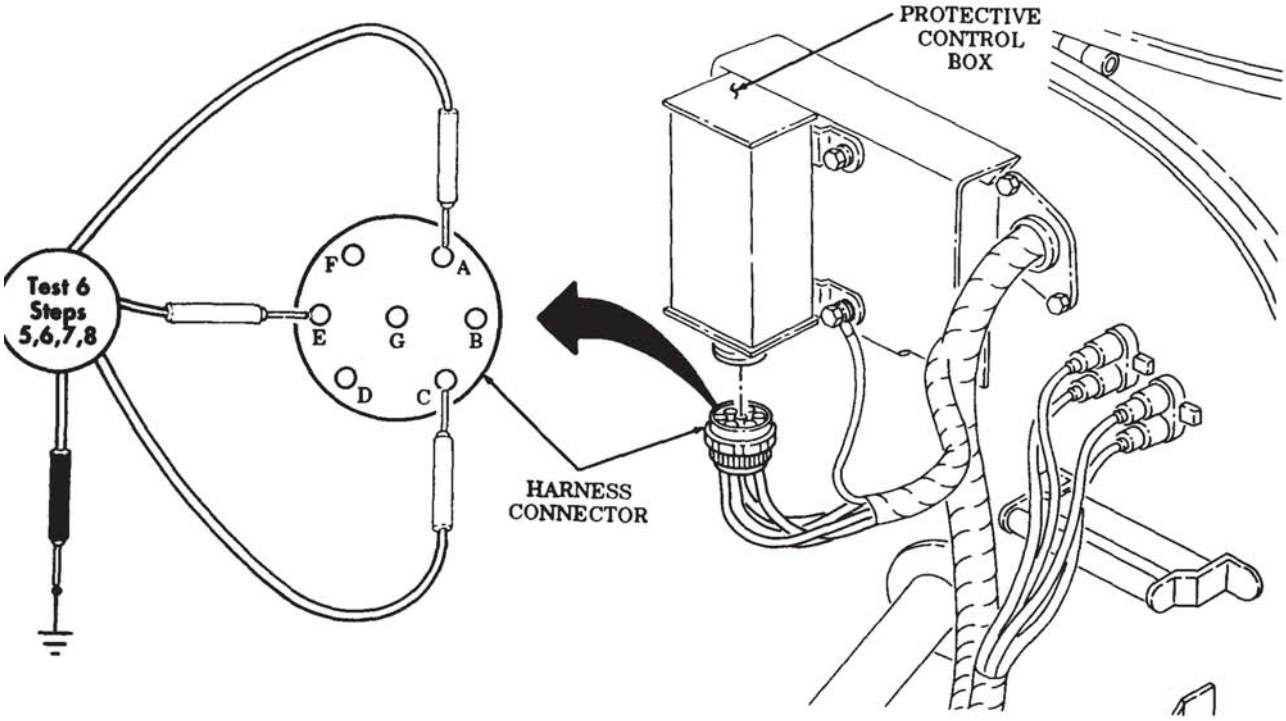

Table 2-4. Electrical Troubleshooting (Contd).

MALFUNCTION TEST OR INSPECTION CORRECTIVE ACTION

Test 7. Test starter circuit for battery voltage out of protective control box.

Step 1. Set multimeter to a range that will measure 24 volts.

Step 2. Disconnect wire harness and remove protective control box (para. 4-36).

Step 3. Connect good ground from protective control box to frame.

Step 4. Connect jumper wire for the lead/pin listed below.

WARNING

Remove all jewelry such as rings, dog tags, bracelets, etc. If jewelry or tools contact jumper wires, a direct short can result causing instant heating of jewelry and tools, severe injury to personnel, or damage to equipment.

HARNESS		CONTROL BOX
Lead 459	to	Pin A
Lead 81	to	Pin C
Lead 14	to	Pin E
Lead 93	to	Pin F

Step 5. Position battery switch to ON position.

Step 6. Position ignition switch to RUN position.

Step 7. Touch positive lead of multimeter to lead 74 (pin B) at protective control box.

Step 8. Touch negative lead of multimeter to side of protective control box housing. Voltage should be present.

a. Repair or replace lead 74 if voltage is present (para. 4-52).

b. Replace protective control box if voltage is not present (para. 4-36).

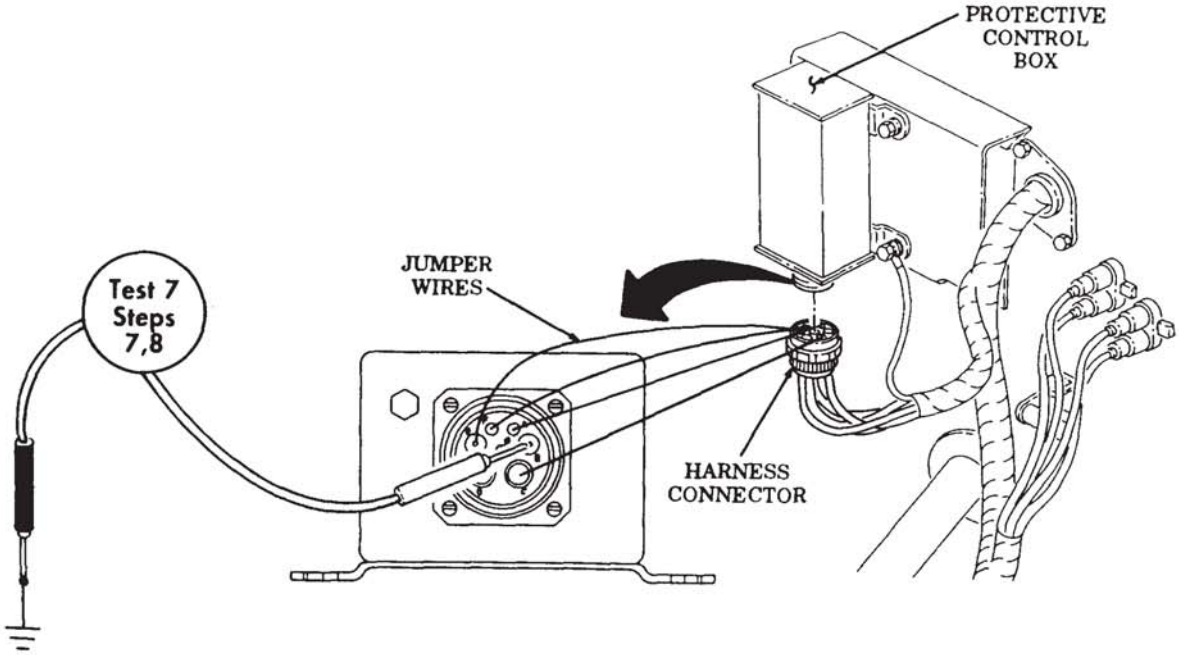

Table 2-4. Electrical Troubleshooting (Contd).

MALFUNCTION TEST OR INSPECTION CORRECTIVE ACTION

Test 8. Test ground lead from protective control box to starter.

Step 1. Set multimeter to RX1 scale.

Step 2. Touch positive lead of multimeter to ground lead at protective control box.

Step 3. Touch negative lead of multimeter to ground lead at starter. Continuity should be present.

Repair or replace lead if continuity is not present (para. 4-52).

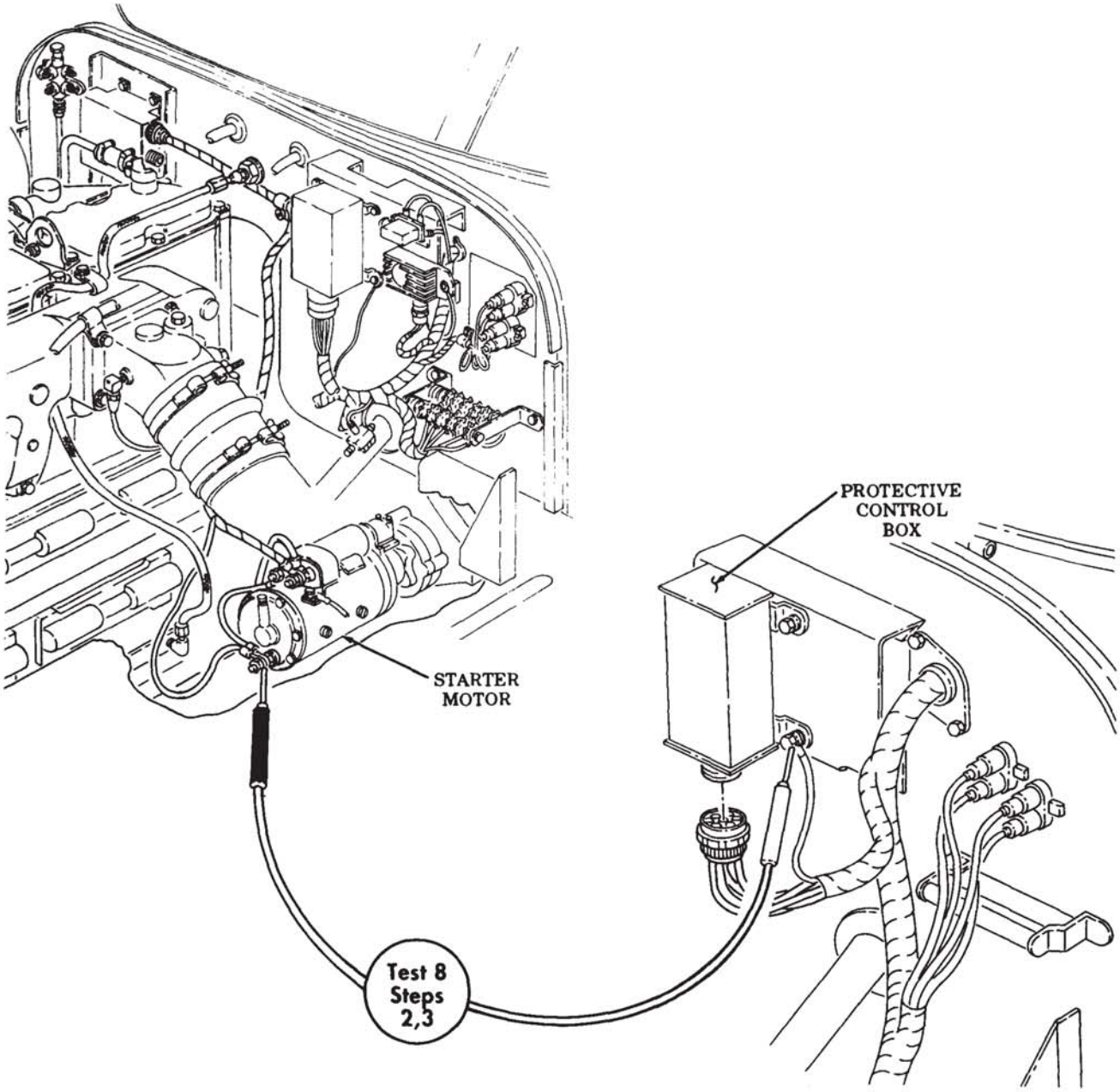

Table 2-4. Electrical Troubleshooting (Contd).

MALFUNCTION TEST OR INSPECTION CORRECTIVE ACTION

Test 9. Check for battery voltage at battery switch.

Step 1. Set multimeter to a range that will measure 24 volts.

Step 2. Disconnect lead 81 at pin A from battery switch.

Step 3. Touch positive lead of multimeter to contact end of lead 81.

Step 4. Touch negative lead of multimeter to frame ground. Voltage should be present.

a. If voltage is present, go to step 5.

b. Repair or replace lead 81 if voltage is not present (para. 4-52).

Step 5. Connect lead 81 into battery switch.

Step 6. Disconnect lead 459 and two leads 54 from pins B, C, and D.

Step 7. Position battery switch to ON position.

Step 8. Touch positive lead of multimeter to contact end of pin B.

Step 9. Touch negative lead of multimeter to frame ground. Voltage should be present.

Step 10. Touch positive lead of multimeter to pin C. Voltage should be present.

Step 11. Touch positive lead of multimeter to pin D. Voltage should be present.

a. If voltage is present at all pins tested, go to test 10.

b. Replace battery switch if voltage is not present at one or more pins tested (para. 4-17).

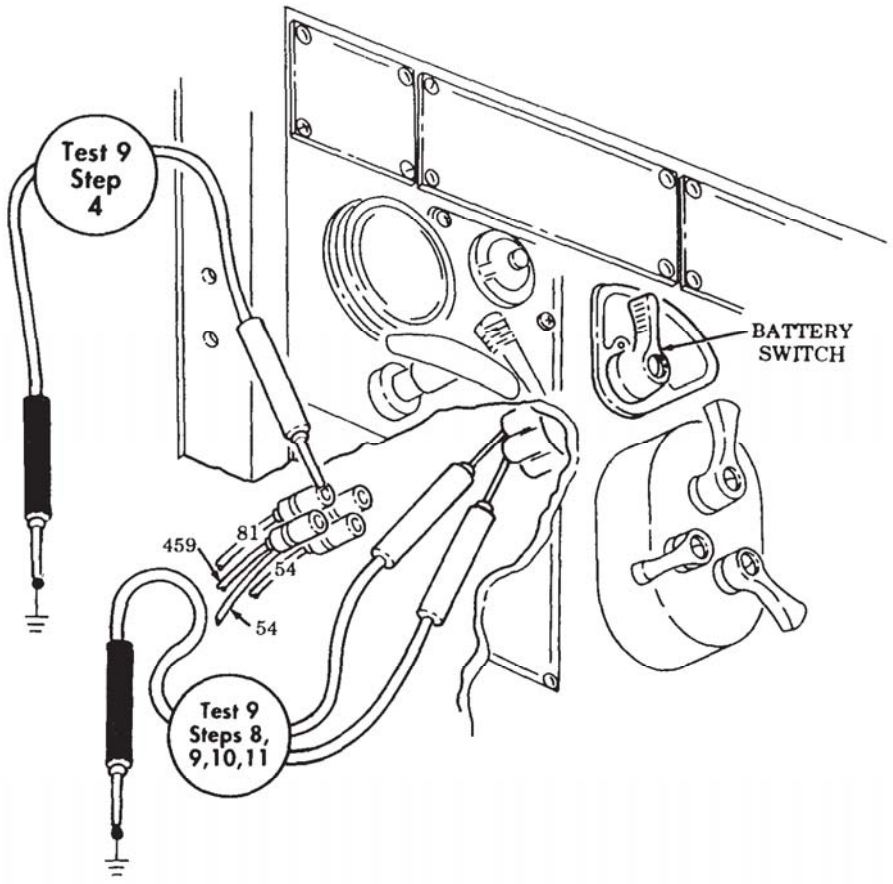

Table 2-4. Electrical Troubleshooting (Contd).

MALFUNCTION TEST OR INSPECTION CORRECTIVE ACTION

Test 10. Test for battery voltage at ignition switch.

Step 1. Set multimeter to a range that will measure 24 volts.
Step 2. Disconnect lead 54 from ignition switch (pin R).
Step 3. Position battery switch to ON position.
Step 4. Touch positive lead of multimeter to contact end of lead 54.
Step 5. Touch negative lead of multimeter to frame ground. Voltage should be present.
  a. If voltage is present, go to step 6.
  b. Repair or replace lead 54 if voltage is not present (para. 4-52).
Step 6. Install lead 54.
Step 7. Disconnect leads 214 and 14 (pins B and S).
Step 8. Position ignition switch to RUN position.
Step 9. Touch positive lead of multimeter to contact end of pin B.
Step 10. Touch negative lead of multimeter to frame ground. Voltage should be present.
Step 11. Touch positive lead of multimeter to contact end of pin S. Voltage should be present.
  a. Repair or replace lead 14 if voltage is present at both pins tested (para. 4-52).
  b. Replace ignition switch if voltage is not present at one or more pins tested (para. 4-17).

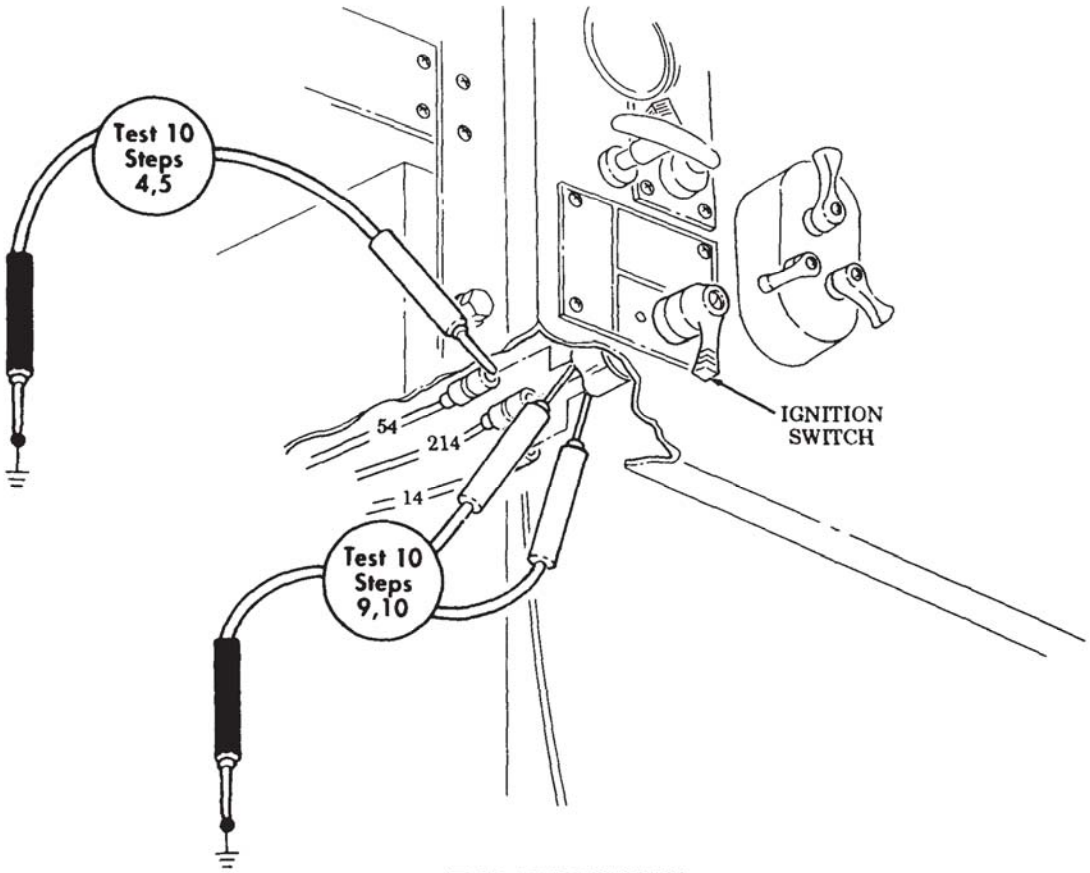

END OF TESTING!

Table 2-4. Electrical Troubleshooting (Contd).

MALFUNCTION TEST OR INSPECTION CORRECTIVE ACTION

3. STARTER MOTOR OPERATES, BUT ENGINE CRANKS SLOWLY

NOTE

If STE/ICE is available, perform NG80 – starter circuit tests (chapter 2, section VII).

Test 1. Check batteries for overheating.

Step 1. Crank engine for 15 seconds.

Step 2. Check batteries for overheating by feeling battery terminal connections. If battery terminals are hot:

a. Clean corroded connections to bright metal.

b. Tighten all loose connections at batteries, ground, and starter.

Test 2. Test specific gravity for each battery.

Perform a specific gravity test (TM 9-6140-200-14). Batteries must test 1.225 or greater. Temperature must be corrected, and each cell in a battery must test within 0.025 points of the others.

a. Charge all batteries not meeting requirements (TM 9-6140-200-14) and check specific gravity again.

b. If 0.025 point variation still exists within any battery, replace battery (para. 4-49).

Test 3. Test starter motor voltage.

Step 1. Set multimeter to a range that will measure 24 volts.

Step 2. Position battery switch to ON position.

Step 3. Touch positive lead of multimeter to contact end of lead 6 at starter motor.

Step 4. Touch negative lead of multimeter to contact end of ground strap at end plate on starter.

Step 5. Crank engine and observe cranking voltage.

a. If voltage is 19 volts or greater, go to test 4.

b. If voltage is less than 19 volts, go to malfunction 1, tests 1 and 2.

Test 4. Test starter motor-to-solenoid strap voltage drop.

Step 1. Set multimeter to a range that will measure tenths of a volt.

Step 2. Touch positive lead of multimeter to contact end of ground strap at solenoid.

Step 3. Touch negative lead of multimeter to contact end of ground strap at starter motor.

Step 4. Crank engine and observe multimeter.

a. Voltage reading exceeding 0.2 volts indicates a bad connection at starter. Clean and tighten all connections and retest.

b. Replace starter if retest fails (para. 4-5).

Test 5. Test starter motor solenoid contact voltage drop.

Step 1. Set multimeter to a range that will measure tenths of a volt.

Step 2. Touch positive lead of multimeter to contact end of lead 6 at solenoid.

Step 3. Touch negative lead of multimeter to contact end of ground strap at solenoid.

Step 4. Crank engine and observe multimeter.

a. Replace starter motor if voltage reading exceeds 0.4 volts (para. 4-5).

b. If malfunction still exists, go to test 6.

Table 2-4. Electrical Troubleshooting (Contd).

MALFUNCTION TEST OR INSPECTION CORRECTIVE ACTION

Test 6. Test negative cable 7 from batteries to starter motor.
- Step 1. Set multimeter to a range that will measure tenths of a volt.
- Step 2. Touch positive lead of multimeter to contact end of lead 7 at starter motor.
- Step 3. Touch negative lead of multimeter to contact end of lead 7 at battery frame ground.
- Step 4. Crank engine and observe multimeter.
  - a. Repair or replace lead if voltage reading exceeds 0.4 volts (para. 4-52).
  - b. If malfunction still exists, go to test 7.

Test 7. Test positive cable 6 voltage drop from batteries to starter solenoid.
- Step 1. Set multimeter to a range that will measure tenths of a volt.
- Step 2. Touch positive lead of multimeter to contact end of lead 6 at batteries.
- Step 3. Touch negative lead of multimeter to contact end of lead 6 at starter solenoid.
- Step 4. Crank engine and observe multimeter.
  - a. Repair or replace lead if voltage reading exceeds 0.4 volts (para. 4-52).
  - b. If malfunction still exists, notify your supervisor.

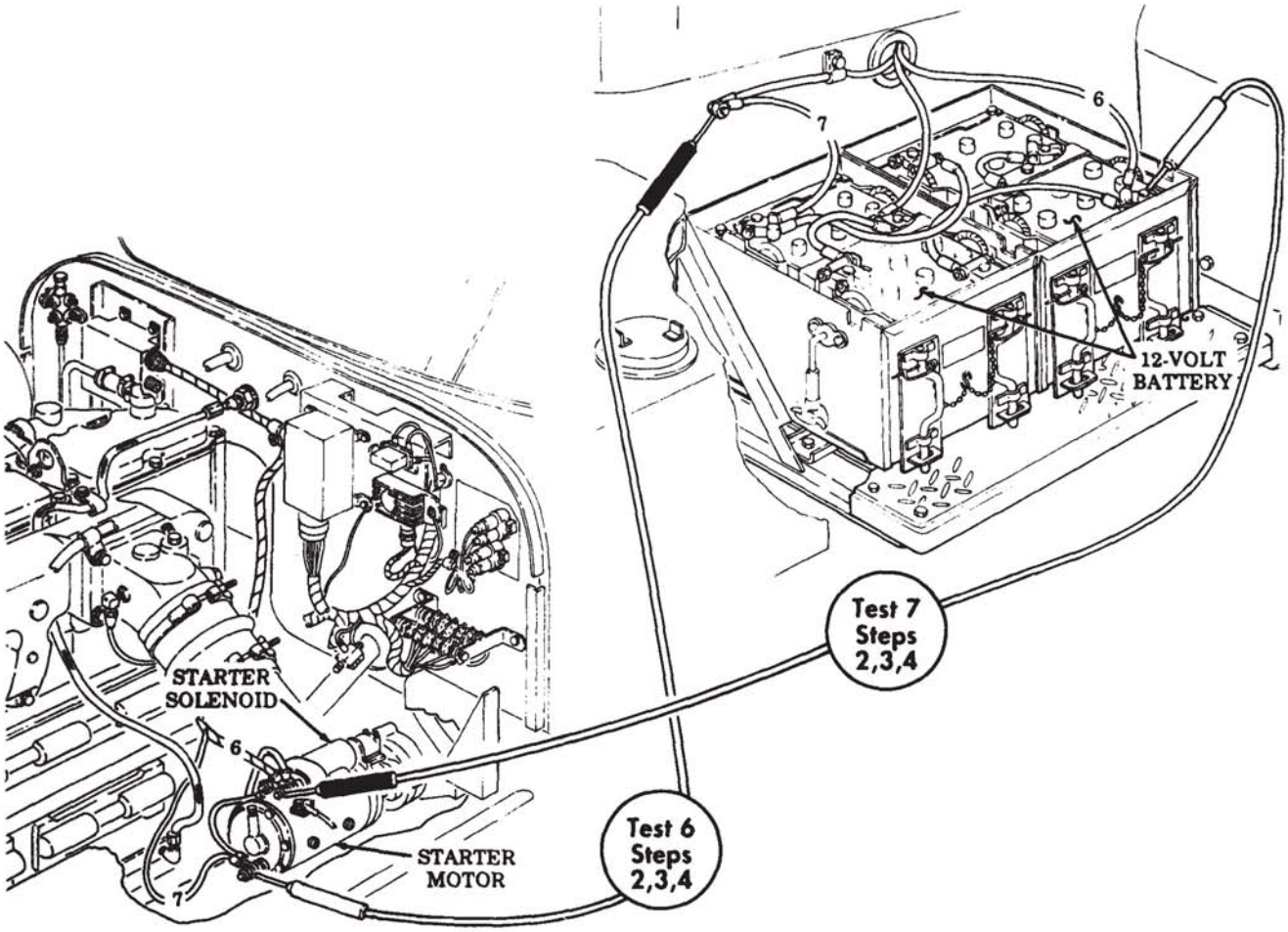

END OF TESTING!

Table 2-4. Electrical Troubleshooting (Contd).

MALFUNCTION TEST OR INSPECTION CORRECTIVE ACTION

4. STARTER MOTOR OPERATES, BUT ENGINE WILL NOT START

Test 1. Check fuel solenoid for input voltage.

Step 1. Position battery switch to ON position.

Step 2. Set multimeter to a range that will measure 24 volts.

Step 3. Remove lead 54 from battery switch.

Step 4. Touch positive lead of multimeter to contact end of lead 54.

Step 5. Touch negative lead of multimeter to engine block.

a. If voltage is present, go to test 2.

b. If voltage is not present, go to malfunction 2, test 9, and check voltage at battery switch.

Test 2. Check fuel solenoid for output voltage.

Step 1. Position battery switch to ON position.

Step 2. Set multimeter to a range that will measure 24 volts.

Step 3. Touch positive lead to contact end of fuel solenoid.

Step 4. Touch negative lead to engine block.

If no voltage is present, notify your supervisor.

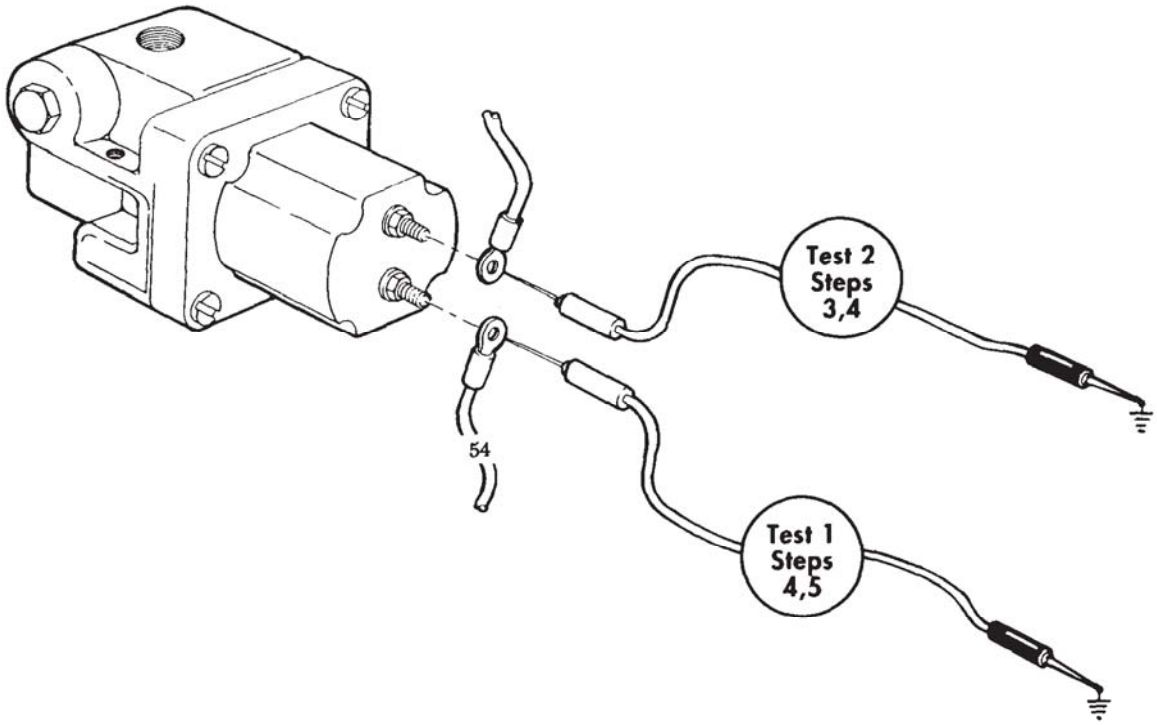

END OF TESTING!

Table 2-4. Electrical Troubleshooting (Contd).

MALFUNCTION TEST OR INSPECTION CORRECTIVE ACTION

CHARGING SYSTEM (60 AMP)

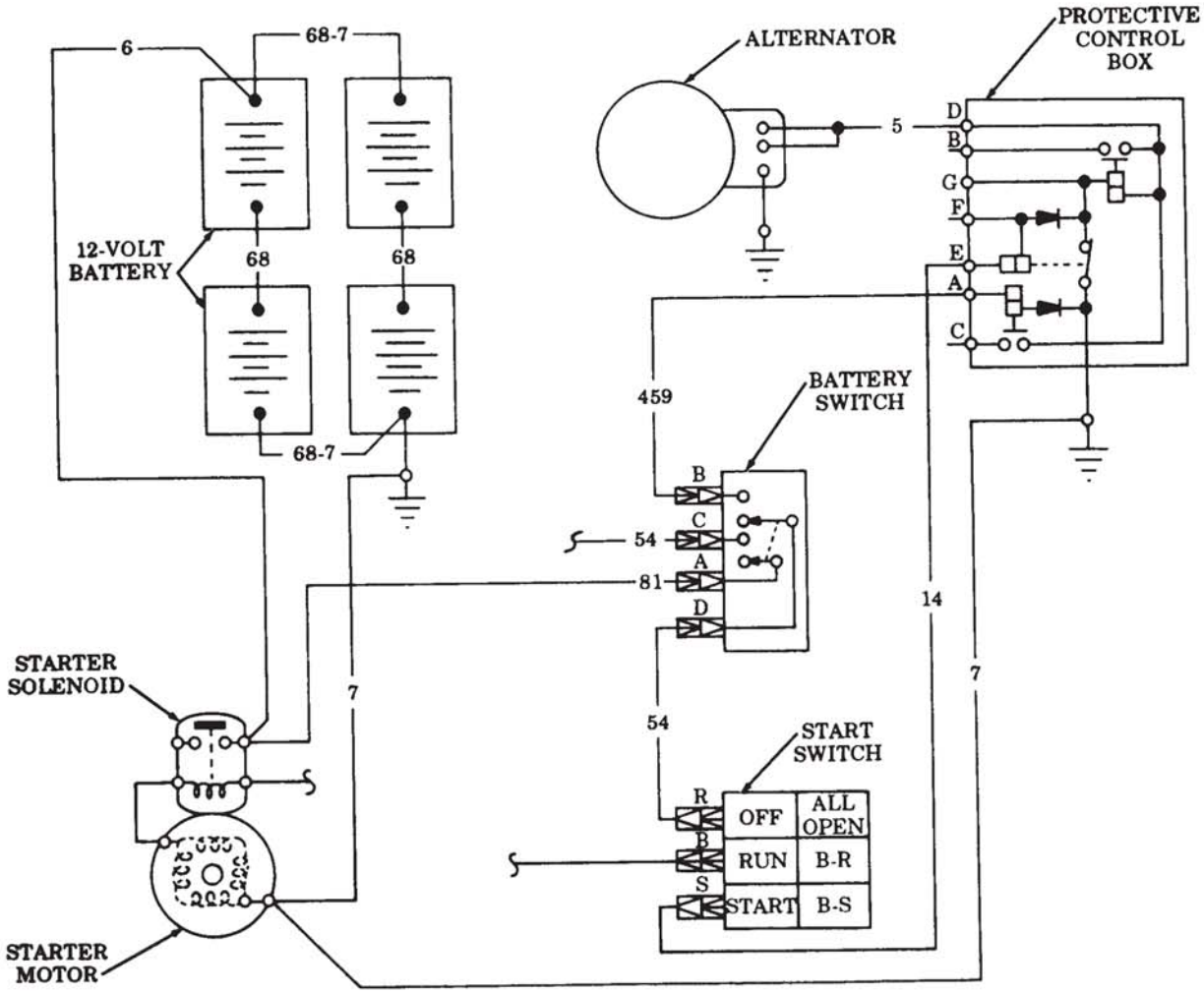

5. NO ALTERNATOR OUTPUT (VOLTMETER IN LEFT-HAND RED)

NOTE

- Voltage regulator is built into alternator.
- If STE/ICE is available, perform NG50 – charging circuit tests (chapter 2, section VII).

Test 1. Check for loose, broken, or missing drive belts.

a. Adjust loose belts (para. 4-4).

b. Replace broken or missing belts (para. 4-4).

Table 2-4. Electrical Troubleshooting (Contd).

MALFUNCTION TEST OR INSPECTION CORRECTIVE ACTION

Test 2. Test charging voltage at batteries.

Step 1. Loosen two holddown latches, remove battery cover, and slide batteries onto running board.

Step 2. Start engine (TM 9-2320-260-10).

Step 3. Set engine speed at 1200 rpm.

Step 4. Turn on all vehicle accessories.

Step 5. Set multimeter to a range that will measure 24 volts.

Step 6. Touch positive lead of multimeter to positive terminal at battery.

Step 7. Touch negative lead of multimeter to negative terminal at battery. Voltage should be present.

a. If battery voltage measure 24.0 volts, alternator has no output. Go to test 3 and check input voltage.

b. If battery voltage is between 24.0 and 26.0 volts, alternator output is weak. Go to test 3 and check input voltage.

c. If battery voltage measures 28.0 ± 0.2 volts and battery voltmeter on instrument panel shows no voltage, go to malfunction 32, tests 1 and 2.

d. If battery voltage measures between 26.0 and 30.0 volts, adjust alternator voltage output (para. 4-2).

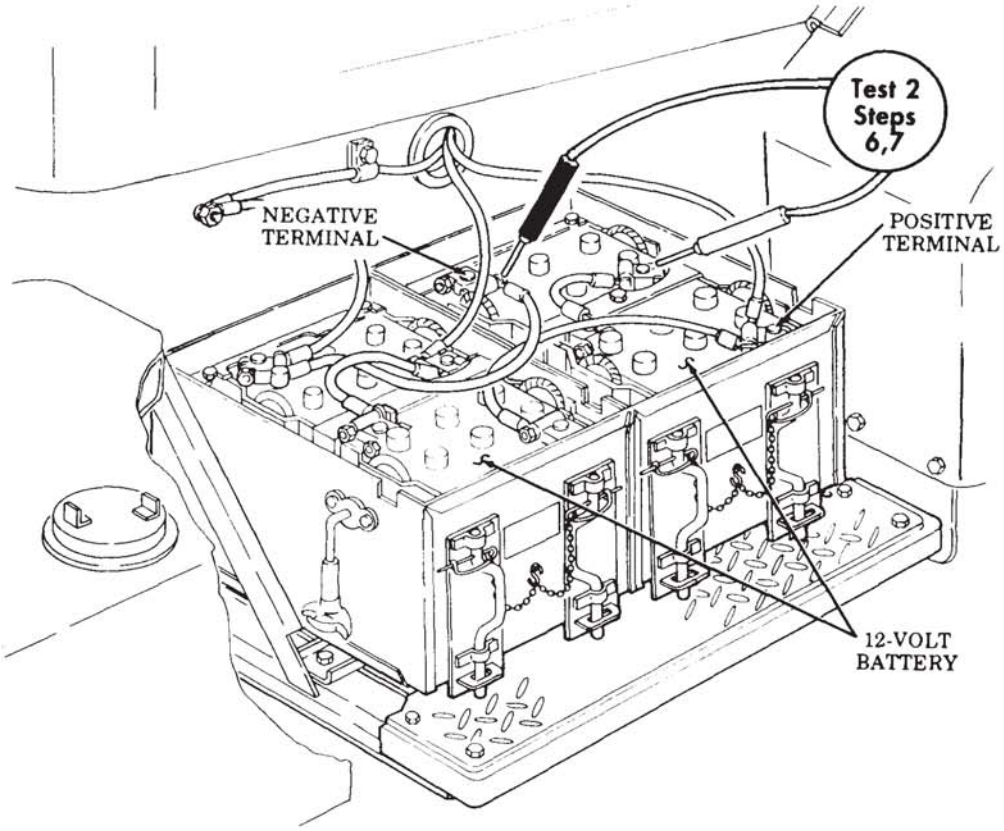

Table 2-4. Electrical Troubleshooting (Contd).

MALFUNCTION TEST OR INSPECTION CORRECTIVE ACTION

Step 8. Check voltage regulator stability as follows:

a. Decrease engine speed to 1000 rpm with headlights in the ON position. Regulated battery voltage should remain at 28.0 ± 0.2 VDC.

b. If battery voltage drops below 27.5 V, replace alternator (para. 4-2).

c. Increase engine speed to 2000 rpm. Regulated battery voltage should remain at 28.0 ± 0.2 VDC.

d. If battery voltage increases above 28.5 V, replace alternator (para. 4-2).

e. Return engine speed to 1200 rpm.

f. Turn headlights OFF and ON and observe change in battery voltage.

g. If battery voltage changes more than ± 0.5 VDC and does not return quickly to 28.0 ± 0.2 VDC, replace alternator (para. 4-2).

Test 3. Test input voltage to alternator.

Step 1. Set multimeter to a range that will measure 24 volts.

Step 2. Disconnect lead 568 at alternator.

Step 3. Position battery switch to ON position.

Step 4. Position ignition switch to RUN position.

Step 5. Touch positive lead of multimeter to contact end of lead 568 at alternator.

Step 6. Touch negative lead of multimeter to frame ground. Voltage should be present.

a. If voltage is present, go to test 4.

b. If voltage is not present, replace alternator (para. 4-2).

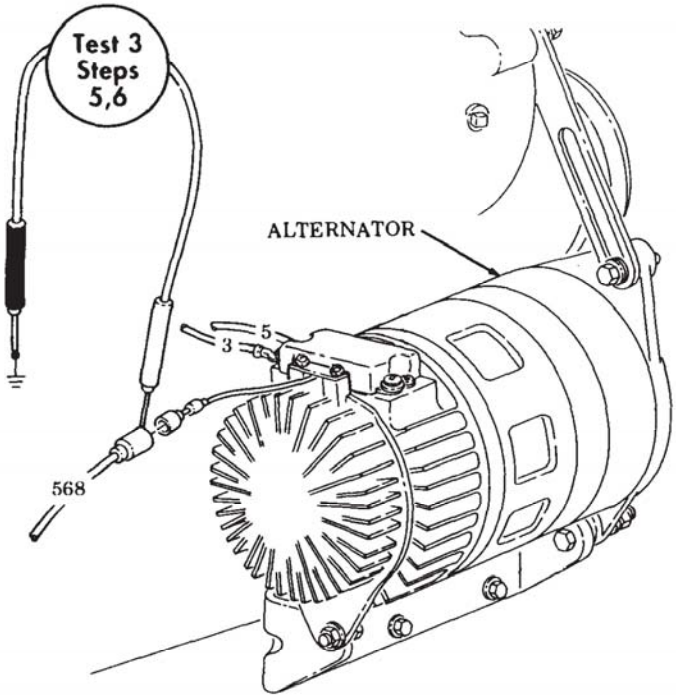

Table 2-4. Electrical Troubleshooting (Contd).

MALFUNCTION TEST OR INSPECTION CORRECTIVE ACTION

Test 4. Test protective control box for voltage output.

Step 1. Disconnect harness connector at protective control box.

WARNING

Remove all jewelry such as rings, dog tags, bracelets, etc. If jewelry or tools contact jumper wires, a direct short can result, causing instant heating or jewelry and tools, severe injury to personnel, or damage to equipment.

Step 2. Connect one jumper wire from lead 459 (pin A) to protective control box pin A.

Step 3. Connect one jumper wire from lead 81 (pin C) to protective control box pin C.

Step 4. Position battery switch to ON position.

Step 5. Position ignition switch to RUN position.

Step 6. Set multimeter to a range that will measure 24 volts.

Step 7. Touch positive lead of multimeter to pin D at protective control box.

Step 8. Touch negative lead of multimeter to frame ground. Voltage should be present.

a. Repair or replace lead 5 if voltage is present (para. 4-52).

b. Replace protective control box if voltage is not present (para. 4-36).

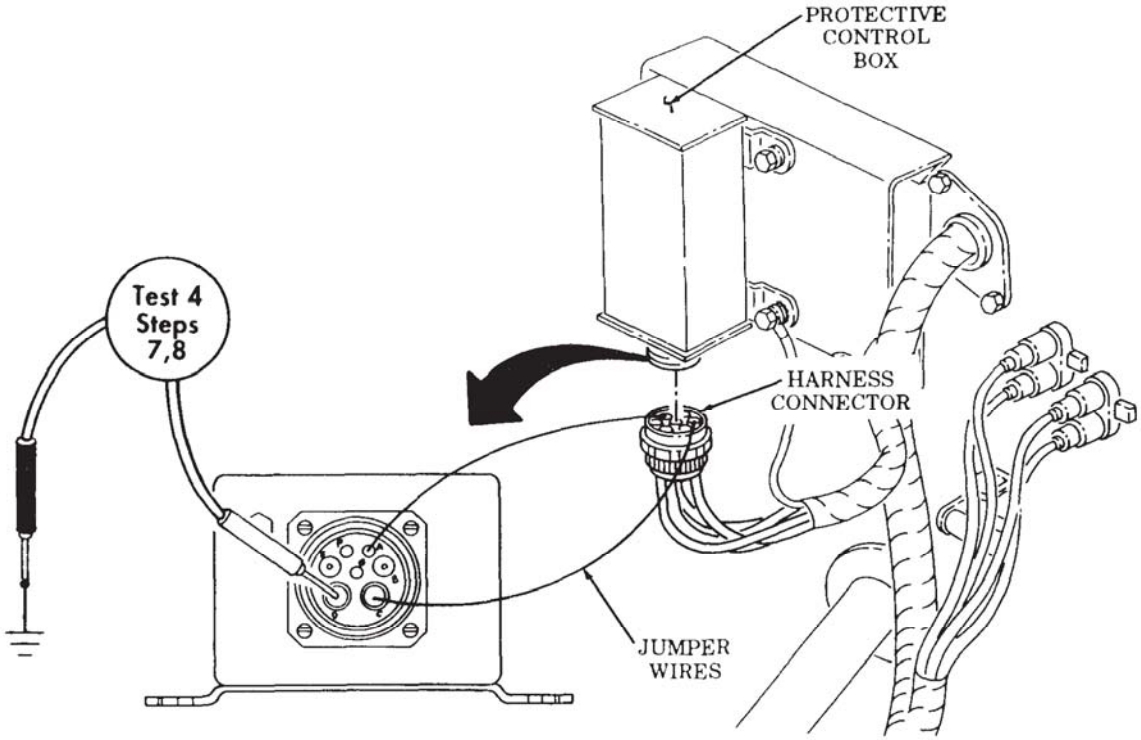

END OF TESTING!

Table 2-4. Electrical Troubleshooting (Contd).

MALFUNCTION TEST OR INSPECTION CORRECTIVE ACTION

6. BATTERIES NOT CHARGING PROPERLY (VOLTMETER IN YELLOW OR RIGHT-HAND RED)

NOTE

If STE/ICE is available, perform NG50 – charging circuit tests (chapter 2, section VII).

Test 1. Check for loose, broken, or missing alternator belts.

a. Adjust loose belts (refer to para. 4-4).

b. Replace broken or missing belts (refer to para. 4-4).

Test 2. Test battery voltage (malfunction 5, test 2).

NOTE

Battery voltmeter located on instrument panel is not always accurate and should not be used to adjust voltage. Indicator needle in voltmeter located on instrument panel should cover the white dot at edge of green area when battery voltage is 28.0 ± 0.2 VDC.

If voltage across batteries cannot be adjusted to 28.0 ± 0.2 VDC, go to malfunction 5, test 3, and check voltage.

END OF TESTING!

7. BATTERIES HOT OR BOILING, CORRECTED SPECIFIC GRAVITY OF ALL CELLS IS 1.280

NOTE

If STE/ICE is available, perform NG50 – charging circuit tests (chapter 2, section VII).

Test charging voltage (malfunction 5, test 2).

END OF TESTING!

8. BATTERIES USE EXCESSIVE WATER

NOTE

If STE/ICE is available, perform NG81 – battery tests or NG50 – charging circuit tests (chapter 2, section VII).

Test charging voltage (malfunction 5, test 2).

END OF TESTING!

9. BATTERIES RUN DOWN IN OPERATION

NOTE

If STE/ICE is available, perform NG50 – charging circuit tests (chapter 2, section VII).

Test 1. Check for loose, broken, or missing alternator belts.

a. Adjust loose belts (refer to para. 4-4).

b. Replace broken or missing belts (refer to para. 4-4).

Test 2. Test battery voltage (malfunction 5, test 2).

NOTE

If proper voltage is indicated, problem is not in charging system. Refer to battery system troubleshooting (malfunction 1).

END OF TESTING!

Table 2-4. Electrical Troubleshooting (Contd).

MALFUNCTION TEST OR INSPECTION CORRECTIVE ACTION

CHARGING SYSTEM (100 AMP)

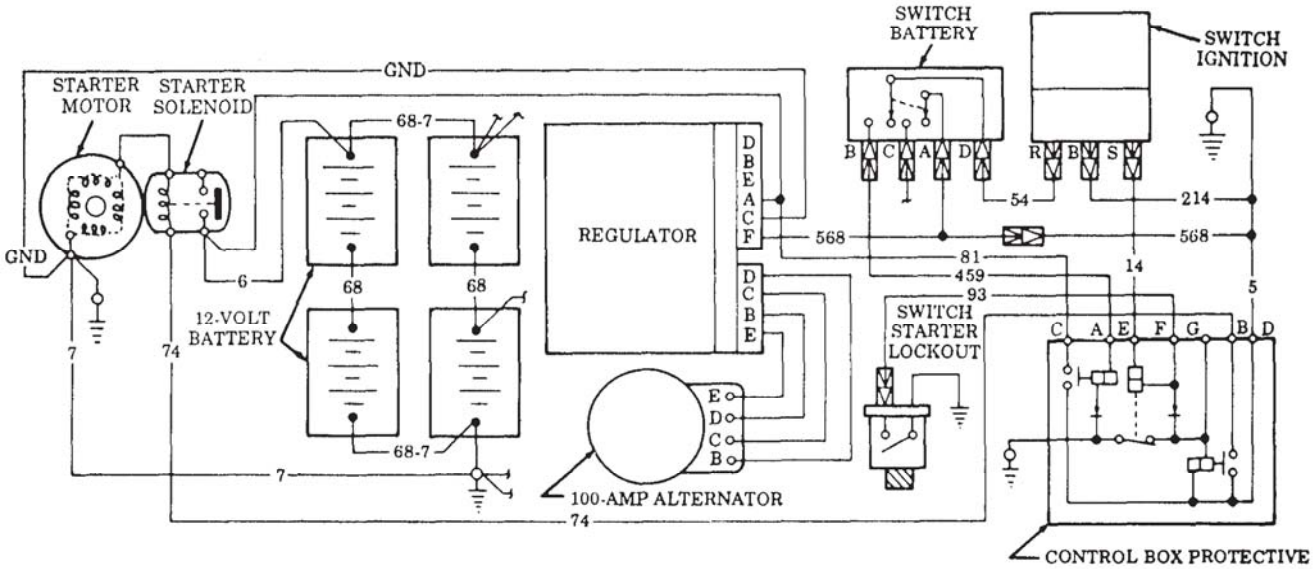

10. NO ALTERNATOR OUTPUT (VOLTMETER IN LEFT-HAND RED)

NOTE

If STE/ICE is available, perform NG50 – charging circuit tests (chapter 2, section VII).

Test 1. Check for loose, broken, or missing belts.

a. Adjust loose belts (para. 4-4).

b. Replace broken or missing belts (para. 4-4).

Test 2. Test charging voltage at batteries.

Step 1. Loosen two holddown latches, remove battery cover, and slide batteries onto running board.

Step 2. Start engine (TM 9-2320-260-10).

Step 3. Set engine speed at 1200 rpm.

Step 4. Turn on all vehicle accessories.

Step 5. Set multimeter to a range that will measure 24 volts.

Step 6. Touch positive lead of multimeter to positive terminal of battery.

Table 2-4. Electrical Troubleshooting (Contd).

MALFUNCTION TEST OR INSPECTION CORRECTIVE ACTION

Step 7. Touch negative lead of multimeter to negative terminal of battery. Voltage should be present.

a. If battery voltage measures 24.0 volts, alternator has no output. Go to test 3 and check input voltage.

b. If battery voltage is between 24.0 and 26.0 V, alternator output is weak. Go to test 3 and check input voltage.

c. If battery voltage measures 28.0 ± 0.2 V and battery voltmeter on instrument panel shows no voltage, go to malfunction 32, tests 1 and 2.

d. If battery voltage measures between 26.0 and 30.0 volts, adjust alternator voltage output voltage (para. 4-2).

Step 8. Check voltage regulator stability as follows:

a. Decrease engine speed to 1000 rpm with headlights in the ON position. Regulated battery voltage should remain at 28.0 ± 0.2 VDC.

b. Replace alternator if battery voltage drops below 27.5 V (para. 14-41).

c. Increase engine speed to 2000 rpm. Regulated battery voltage should remain at 28.0 ± 0.2 VDC.

d. Replace alternator if battery voltage increases above 28.5 V (para. 14-41).

e. Return engine speed to 1200 rpm.

f. Turn headlights OFF and ON and observe change in battery voltage.

g. Replace alternator if battery voltage changes more than ± 0.5 VDC and does not return quickly to 28.0 ± 0.2 VDC (para. 14-41).

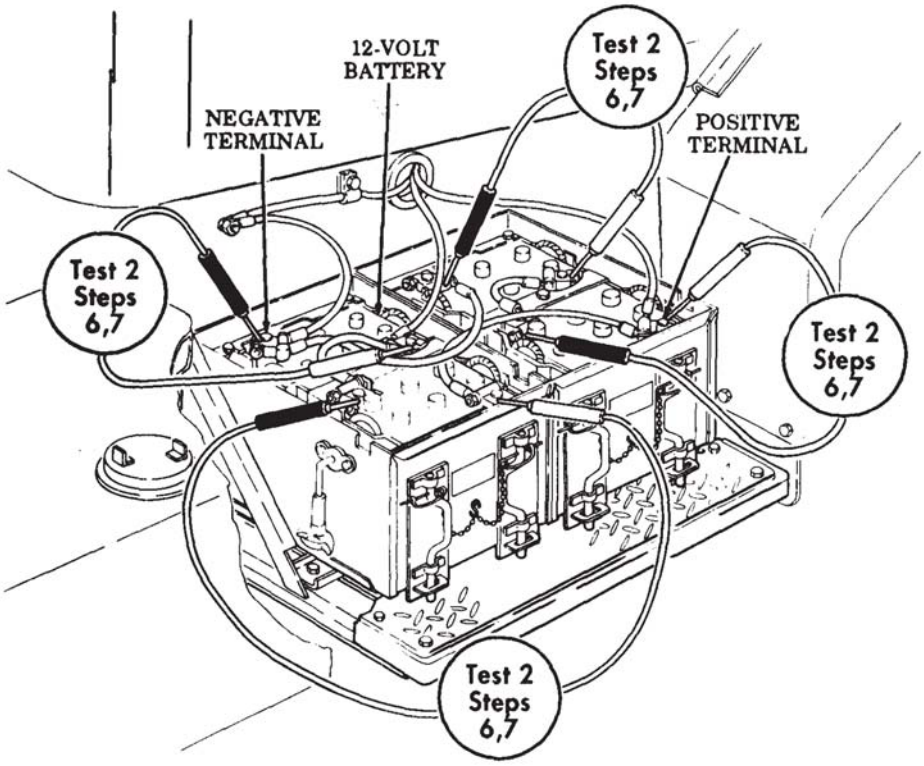

Table 2-4. Electrical Troubleshooting (Contd).

MALFUNCTION TEST OR INSPECTION CORRECTIVE ACTION

Test 3. Test voltage regulator wiring harness.

Step 1. Position battery switch to ON position.

Step 2. Position ignition switch to RUN position.

Step 3. Set multimeter to a range that will measure 24 volts.

Step 4. Disconnect starter wiring harness at voltage regulator.

Step 5. Touch positive lead of multimeter to contact end of socket A.

Step 6. Touch negative lead of multimeter to frame ground. Voltage should be present.

Step 7. Touch positive lead of multimeter to contact end of socket F. Voltage should be present.

a. If voltage is present at both pins tested, go to test 4.

b. Repair or replace wiring harness if voltage is not present at one or more pins tested (para. 4-52).

Step 8. Disconnect wiring harnesses at starter motor.

Step 9. Set multimeter to RX1 scale.

Step 10. Touch positive lead of multimeter to lead 81.

Step 11. Touch negative lead of multimeter to contact end of socket A. Continuity should be present.

Step 12. Touch positive lead of multimeter to lead 568 at alternator.

Step 13. Touch negative lead of multimeter to contact end of socket F. Continuity should be present.

Step 14. Touch positive lead of multimeter to lead GND.

Step 15. Touch negative lead of multimeter to contact end of socket C. Continuity should be present.

a. If continuity is present at all leads and pins tested, go to test 4.

b. Repair or replace wiring harness if continuity is not present at one or more leads or pins tested (para. 4-52).

Table 2-4. Electrical Troubleshooting (Contd).

MALFUNCTION TEST OR INSPECTION CORRECTIVE ACTION

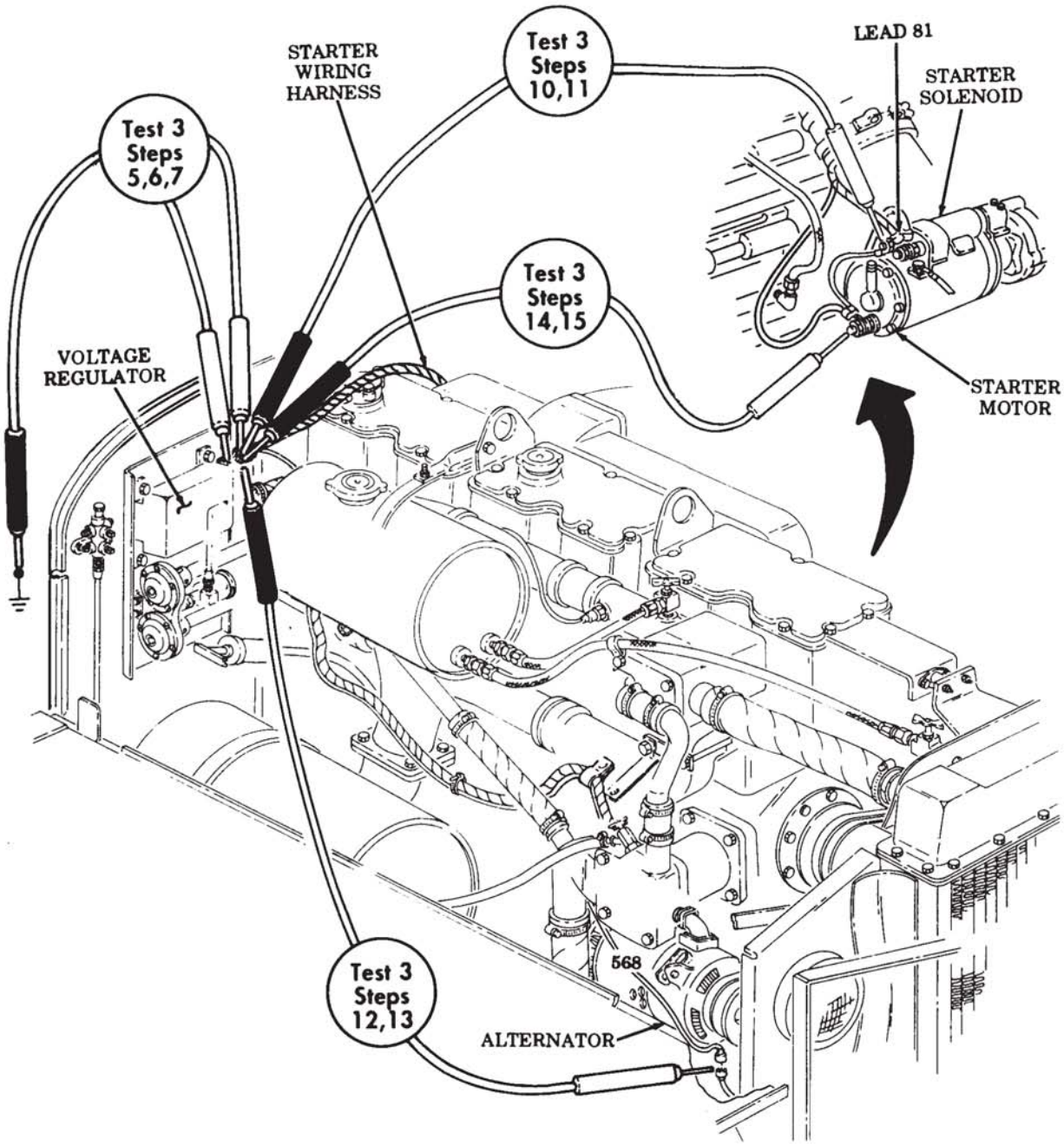

Table 2-4. Electrical Troubleshooting (Contd).

MALFUNCTION TEST OR INSPECTION CORRECTIVE ACTION

Test 4. Test voltage regulator wiring harness to alternator.

Step 1. Set multimeter to a range that will measure 24 volts.

Step 2. Position battery switch to ON position.

Step 3. Position ignition switch to RUN position.

Step 4. Disconnect alternator wiring harness at voltage regulator.

Step 5. Touch positive lead of multimeter to contact end at pin E of voltage regulator.

Step 6. Touch negative lead of multimeter to frame ground. Voltage should be present.

a. If voltage is present, go to step 7.

b. Replace voltage regulator if voltage is not present (para. 14-43).

Step 7. Set multimeter to RX1 scale.

Step 8. Disconnect wiring harness at alternator.

Step 9. Touch positive lead of multimeter to contact end of pin A of wiring harness at voltage regulator.

Step 10. Touch negative lead of multimeter to contact end of pin A of wiring harness at alternator. Continuity should be present.

Step 11. Repeat steps 9 and 10 for pins listed below.

POSITIVE LEAD		NEGATIVE LEAD
Pin B	to	Pin B
Pin C	to	Pin C
Pin D	to	Pin D
Pin E	to	Pin E
Pin F	to	Pin F

Repair or replace wiring harness if continuity is not present at all pins tested (para. 4-52).

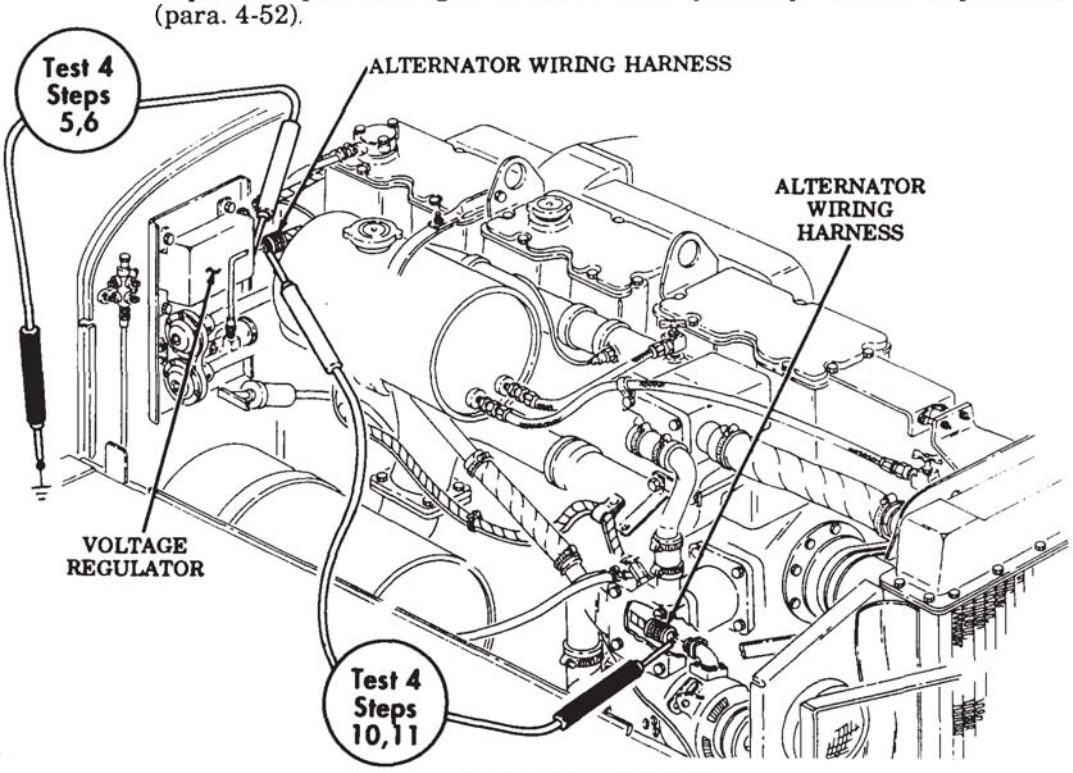

END OF TESTING!

Table 2-4. Electrical Troubleshooting (Contd).

MALFUNCTION TEST OR INSPECTION CORRECTIVE ACTION

11. BATTERIES NOT CHARGING PROPERLY (VOLTMETER IN YELLOW OR RIGHT-HAND RED)

NOTE

If STE/ICE is available, perform NG50 – charging circuit tests (chapter 2, section VII).

Test 1. Check for loose, broken, or missing alternator belts.

a. Adjust loose belts (para. 4-4).

b. Replace broken or missing belts (para. 4-4).

Test 2. Test battery voltage. Go to malfunction 10, test 2.

END OF TESTING!

12. BATTERIES HOT OR BOILING, CORRECTED SPECIFIC GRAVITY OF ALL CELLS IS 1.280

NOTE

If STE/ICE is available, perform NG50 – charging circuit tests (chapter 2, section VII).

Test charging voltage (malfunction 10, test 2).

END OF TESTING!

13. BATTERIES USE EXCESSIVE WATER

NOTE

If STE/ICE is available, perform NG50 – charging circuit tests (chapter 2, section VII).

Test charging voltage (malfunction 10, test 2).

END OF TESTING!

14. BATTERIES RUN DOWN IN OPERATION

NOTE

If STE/ICE is available, perform NG50 – charging circuit tests (chapter 2, section VII).

Test 1. Check for loose, broken, or missing alternator belts.

a. Adjust loose belts (para. 4-4).

b. Replace broken or missing belts (para. 4-4).

Test 2. Test charging voltage (malfunction 10, test 2).

END OF TESTING!

Table 2-4. Electrical Troubleshooting (Contd).

MALFUNCTION	TEST OR INSPECTION	CORRECTIVE ACTION

LIGHTING SYSTEM

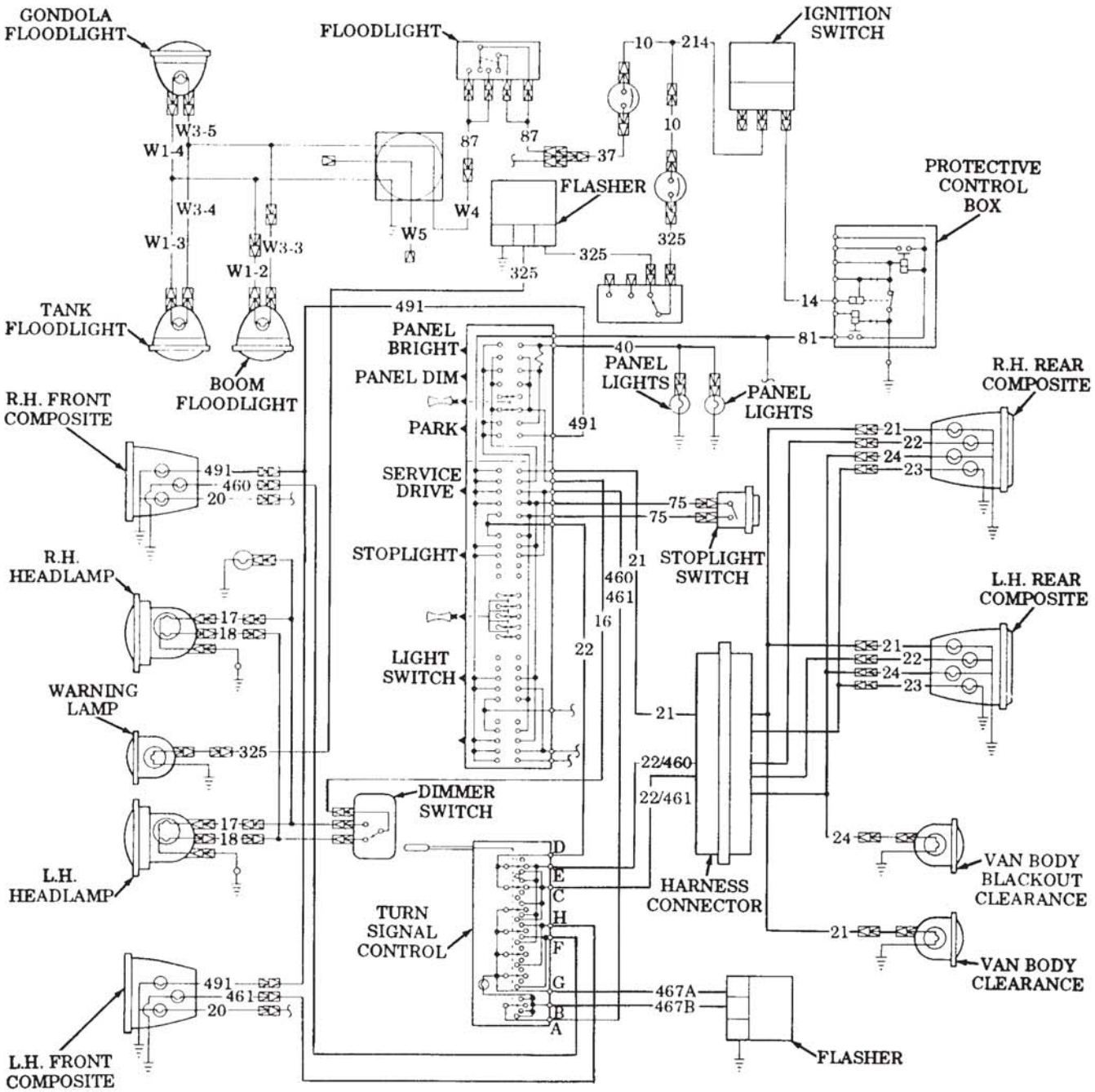

Table 2-4. Electrical Troubleshooting (Contd).

MALFUNCTION TEST OR INSPECTION CORRECTIVE ACTION

15. HEADLIGHT DOES NOT OPERATE ON LOW OR HIGH BEAM, OR BOTH HEADLIGHTS INOPERATIVE

Test 1. Test headlamp connection voltage.

Step 1. Check for loose connections at headlamp, wiring harness, and for broken headlamp.

Step 2. Turn main light switch to OFF position.

Step 3. Disconnect leads 17 (high beam), 18 (low beam), and 91 (ground) behind headlamp.

Step 4. Turn main light switch lever to SERVICE DRIVE position.

Step 5. Set multimeter to a range that will measure 24 volts.

Step 6. Check low beam and high beam voltage.

a. Push dimmer switch to LOW position. Check for battery voltage between lead 18 and lead 91.

b. If voltage is present, go to step 7. If voltage is not present, go to test 2.

c. Push dimmer switch to HIGH position. Check for battery voltage between lead 17 and lead 91.

d. If voltage is present, go to step 8. If voltage is not present, go to test 2.

Step 7. Check continuity of LOW-beam filament.

a. Place multimeter leads between headlamp connectors 18 and 91 at rear of headlamp.

b. Replace sealed beam headlamp if continuity is not present (para. 4-38).

Step 8. Check continuity of HIGH-beam filament.

a. Place multimeter leads between headlamp connectors 17 and 91 at rear of headlamp.

b. Replace sealed beam headlamp if continuity is not present (para. 4-38).

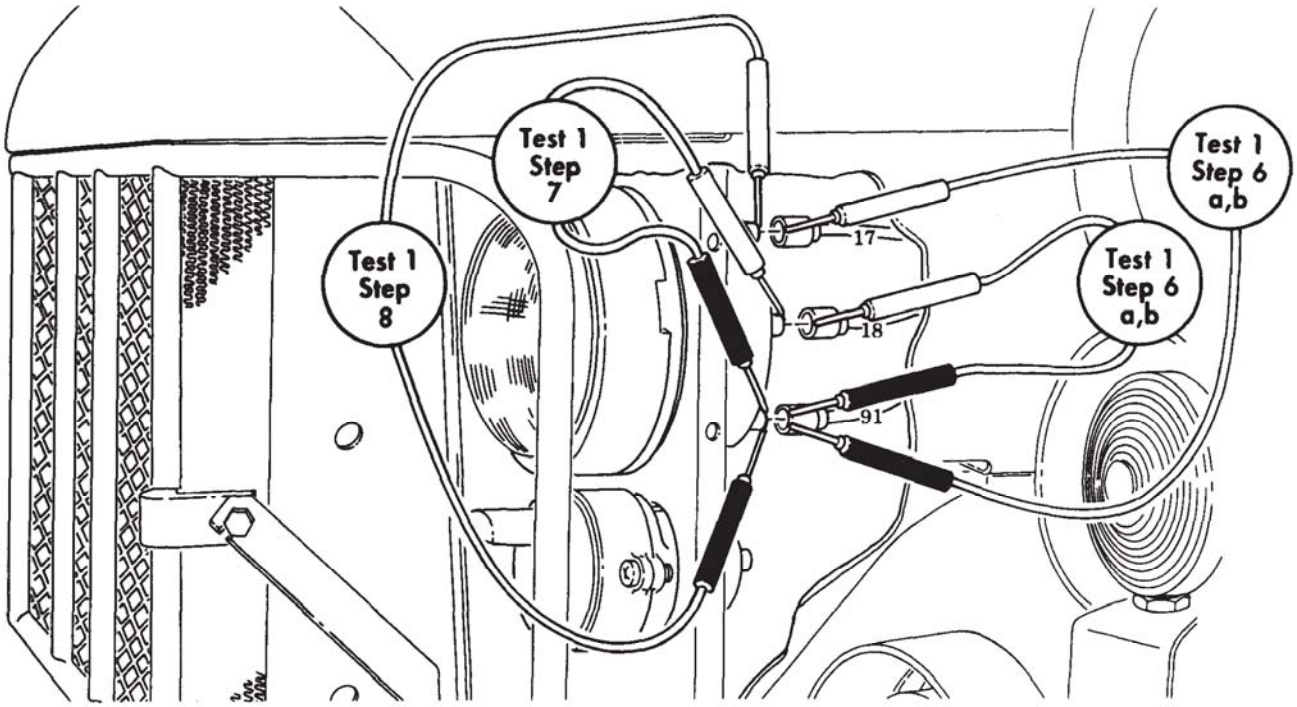

Table 2-4. Electrical Troubleshooting (Contd).

MALFUNCTION TEST OR INSPECTION CORRECTIVE ACTION

Test 2. Test high beam selector switch.

Step 1. Check high beam selector switch input voltage.

a. Remove lead 16 from high beam selector switch.

b. Set multimeter to a range that will measure 24 volts.

c. Check lead 16 contact end for battery voltage.

d. If voltage is present, go to step 2.

e. If voltage is not present, go to test 3.

Step 2. Check high beam selector switch continuity.

a. Remove lead 17 from high beam selector switch pin L. Remove lead 18 from high beam selector switch pin H.

b. Set multimeter to RX1 scale. Check continuity between input pin and pin L.

c. If continuity is not found, push high beam selector switch to change from HIGH to LOW. Recheck continuity.

d. Replace high beam selector switch if no continuity is present (para. 4-35).

e. If continuity is present, check continuity between pin H and input pin.

f. If no continuity is present, push high beam selector switch to change from LOW to HIGH. Recheck continuity.

g. Replace high beam selector switch if no continuity is present (para. 4-35).

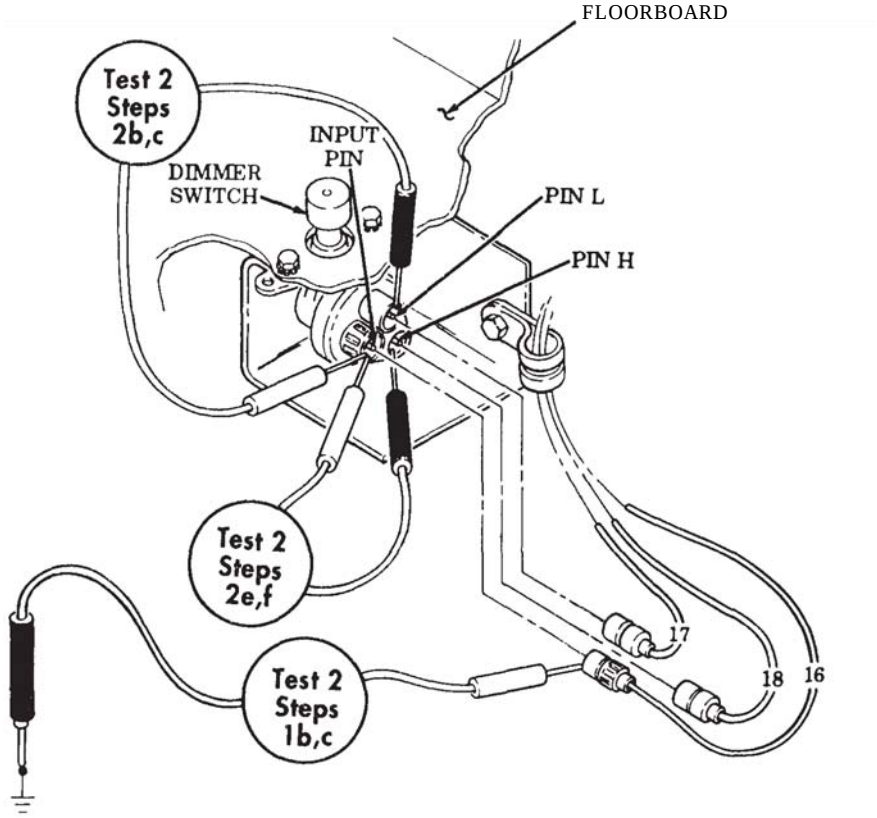

Table 2-4. Electrical Troubleshooting (Contd).

MALFUNCTION TEST OR INSPECTION CORRECTIVE ACTION

Test 3. Test lighting system harness connector voltage.

Step 1. Turn main light switch lever to OFF position.

Step 2. Remove light switch assembly from instrument panel (para. 4-16).

Step 3. Disconnect harness connector from light switch assembly (para. 4-16).

Step 4. Set multimeter to a range that will measure 24 volts.

Step 5. Check for battery voltage in harness connector at pin F.

CAUTION

Voltage at pin F is tied directly to battery without fuse protection. Insert jumper wire in pin of faulty circuit being tested first to prevent energized jumper wire from touching ground and damaging wiring harness.

a. If battery voltage is indicated at pin F, connect a jumper wire from pin F to socket pin of faulty circuit.

b. Replace main light switch if lamps light with jumper wire connected (para. 4-16).

c. If battery voltage is not indicated, go to step 6.

Step 6. Check circuit 81 pin F for loose connections or broken wire. Repair broken wire (para. 4-52). If wiring cannot be repaired, notify your supervisor.

Step 7. Connect front wiring harness connector to light switch and reinstall light switch (para. 4-16).

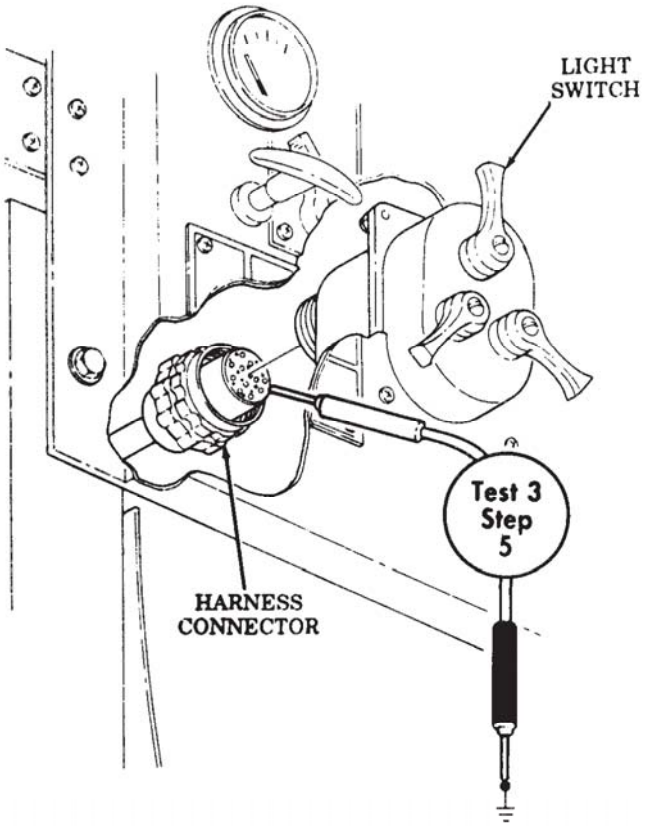

SOCKET	WIRE NO.	CIRCUIT
A	75	Stoplight Switch
B	40	Panel Lights
C	22	Directional Control
D	19	B.O. Driving Light
E	20-24	B.O. Marker Lights
F	81	Battery Pos. 24-Volts
H	21	Service Rear Lights
J	460-461	Directional Indicator
K	75	Stoplight Switch
L	491	Service Parking Lights
M	16	Service Headlights
N	23	B.O. Stoplight

END OF TESTING!

Table 2-4. Electrical Troubleshooting (Contd).

MALFUNCTION TEST OR INSPECTION CORRECTIVE ACTION

16. FRONT MARKER LAMP DOES NOT UGHT

Test 1. Test battery voltage at front composite light.

Step 1. Turn auxiliary light switch lever to OFF position.

Step 2. Disconnect lead 491 at rear of front composite light on side of vehicle where lamp has failed.

Step 3. Turn auxiliary light switch to PARK position.

Step 4. Set multimeter to a range that will measure 24 volts.

Step 5. Check for battery voltage on contact end of lead 491.

a. If battery voltage is present, go to test 2.

b. If battery voltage is not present, go to malfunction *15,* test 3 and test lighting system harness connector pin L.

Test 2. Test continuity of filament in front marker lamp.

Set multimeter to RXl scale. Check continuity between frame ground and lead 491 connected to front composite light.

a. Replace marker lamp if continuity is not present (para. 4-40).

b. If continuity is present, check for corroded contacts at lamp and lead 491 connection to front wiring harness. Connect lead 491.

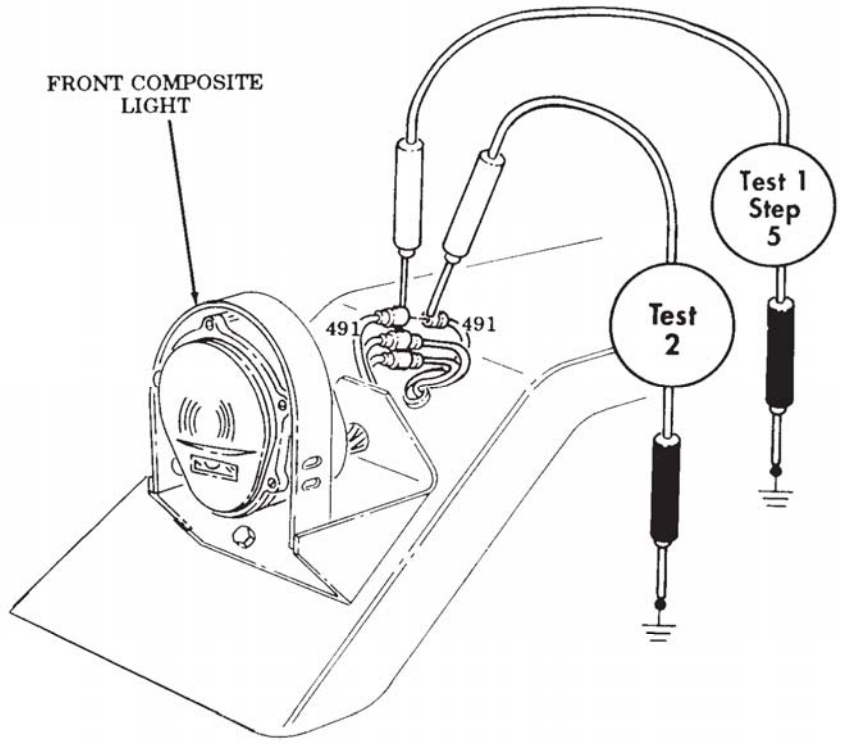

END OF TESTING!

Table 2-4. Electrical Troubleshooting (Contd).

MALFUNCTION TEST OR INSPECTION CORRECTIVE ACTION

17. TAILLIGHT OR CLEARANCE LAMP DOES NOT LIGHT

Test 1. Test battery voltage at rear composite light.

Step 1. Turn main light switch lever to OFF position.

Step 2. Disconnect lead 21 from rear composite light on side of vehicle where lamp has failed.

Step 3. Set multimeter to a range that will measure 24 volts.

Step 4. Turn main light switch lever to SERVICE DRIVE position.

Step 5. Check for battery voltage on contact end of lead 21.

a. If battery voltage is present, go to test 2 and check lamp filaments.

b. If voltage is not present, go to malfunction 15, test 3 and check front wiring harness pin H.

Test 2. Test continuity of filament in taillight lamp.

Set multimeter to RX1 scale. Check continuity between lead 21 connected to rear composite light and frame ground.

a. Replace taillight lamp if continuity is not present (para. 4-45).

b. If continuity is present, check for corroded contacts at lamp and lead 21 connection to rear wiring harness. Connect lead 21.

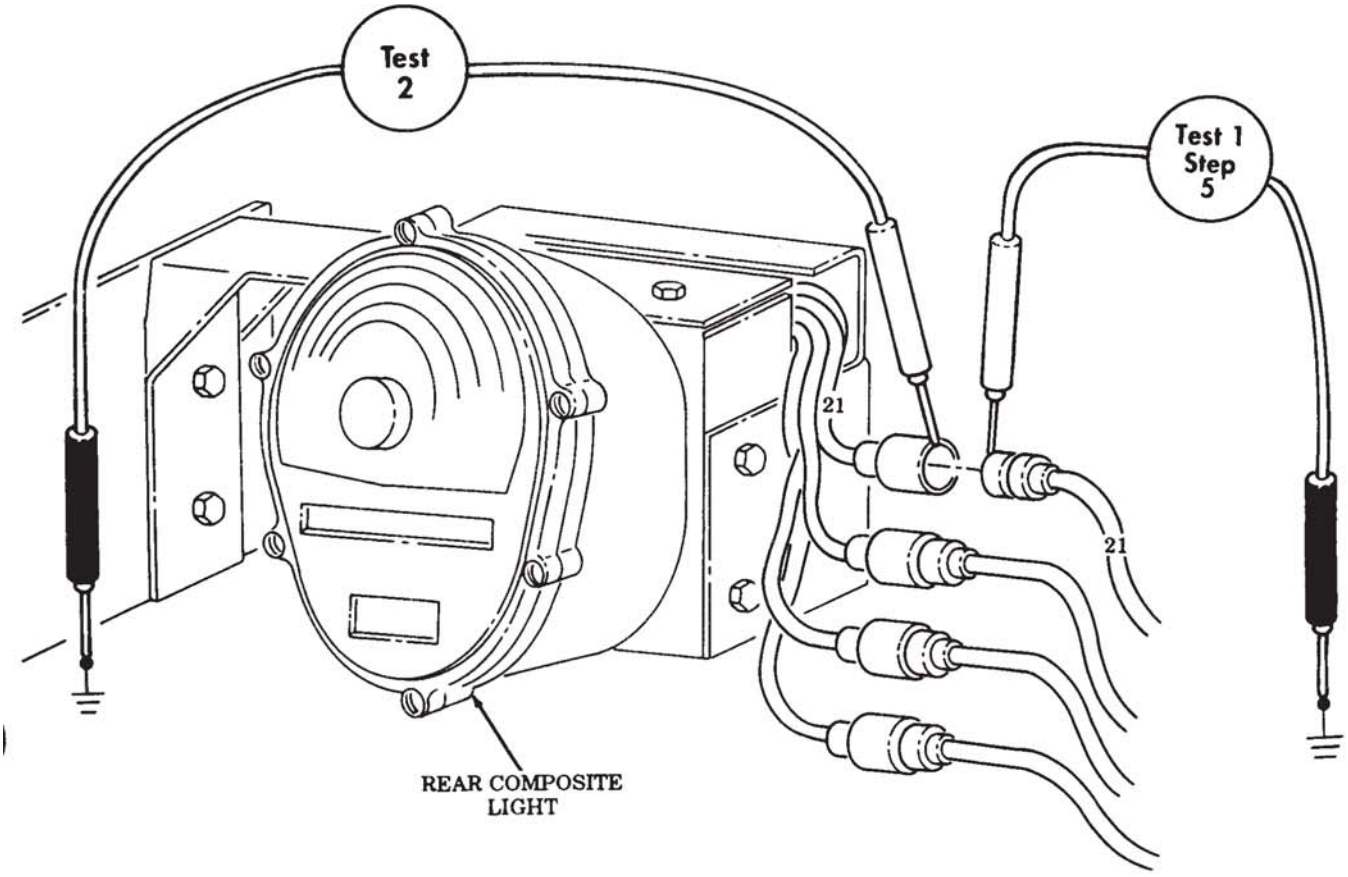

END OF TESTING!

Table 2-4. Electrical Troubleshooting (Contd).

MALFUNCTION TEST OR INSPECTION CORRECTIVE ACTION

18. STOPLIGHT LAMP DOES NOT LIGHT

Test 1. Test battery voltage at rear composite light.

Step 1. Turn main light switch to OFF position.

Step 2. Disconnect lead 22/460 or lead 22/461 from rear composite light on side of vehicle where lamp has failed.

NOTE

Ensure turn indicator is in NEUTRAL position.

Step 3. Check for battery voltage on contact end of lead 22/460 or 22/461.

a. Turn main light switch to ON position.

b. Set multimeter to a range that will measure 24 volts.

c. Depress brake pedal to activate stoplight switch.

d. If voltage is present, go to test 2 and check lamp filament.

e. If battery voltage is not present, go to malfunction 15, test 3 and test lighting system harness connector pin C.

f. Turn main light switch to OFF position.

Test 2. Test continuity of filament in stoplight lamp.

Step 1. Set multimeter to RX1 scale.

Step 2. Check continuity between frame grounds and lead 22/460 or 22/461 connected to rear composite light.

a. If continuity is not present, replace stoplight lamp and lead 22/460 or 22/461 (para. 4-46 or 4-52).

b. If continuity is present, check for corroded contacts at lamp and leads 22/460 or 22/461 connection to rear wiring harness. Connect lead 22/461 or 22/460.

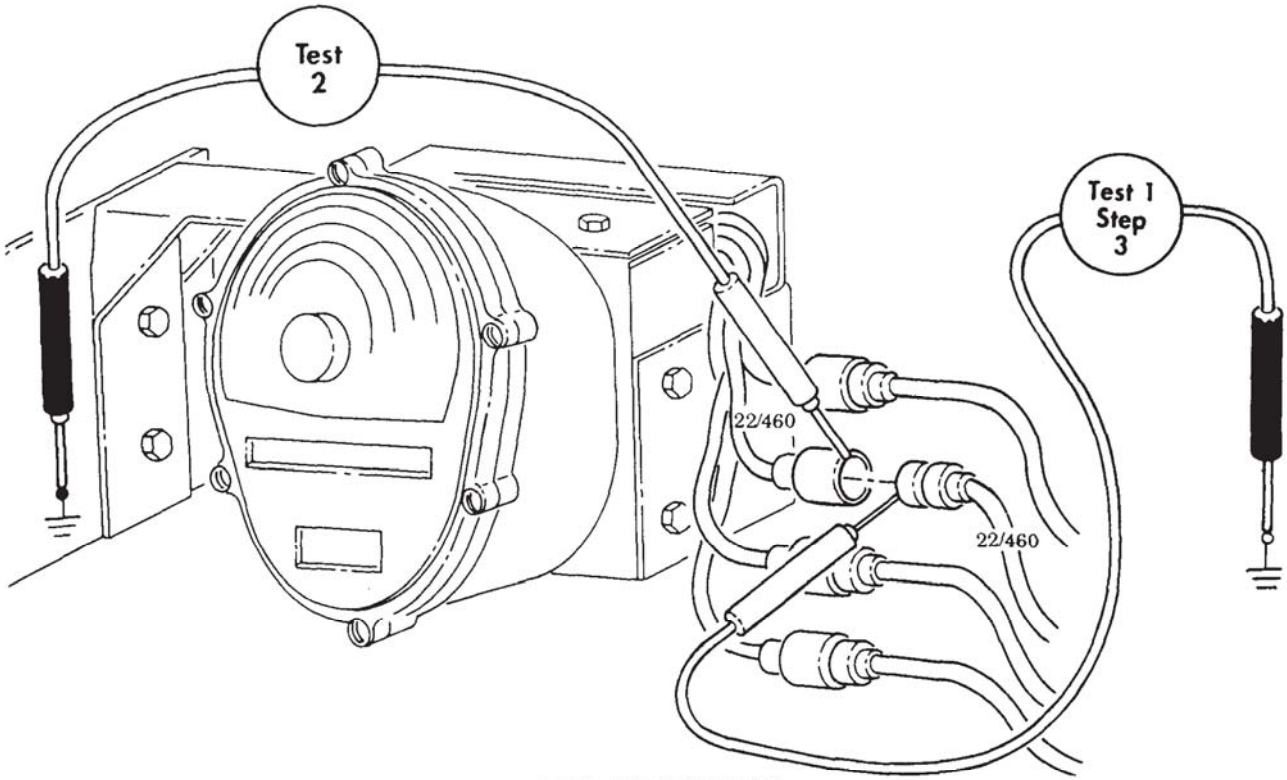

END OF TESTING!

Table 2-4. Electrical Troubleshooting (Contd).

MALFUNCTION
TEST OR INSPECTION
CORRECTIVE ACTION

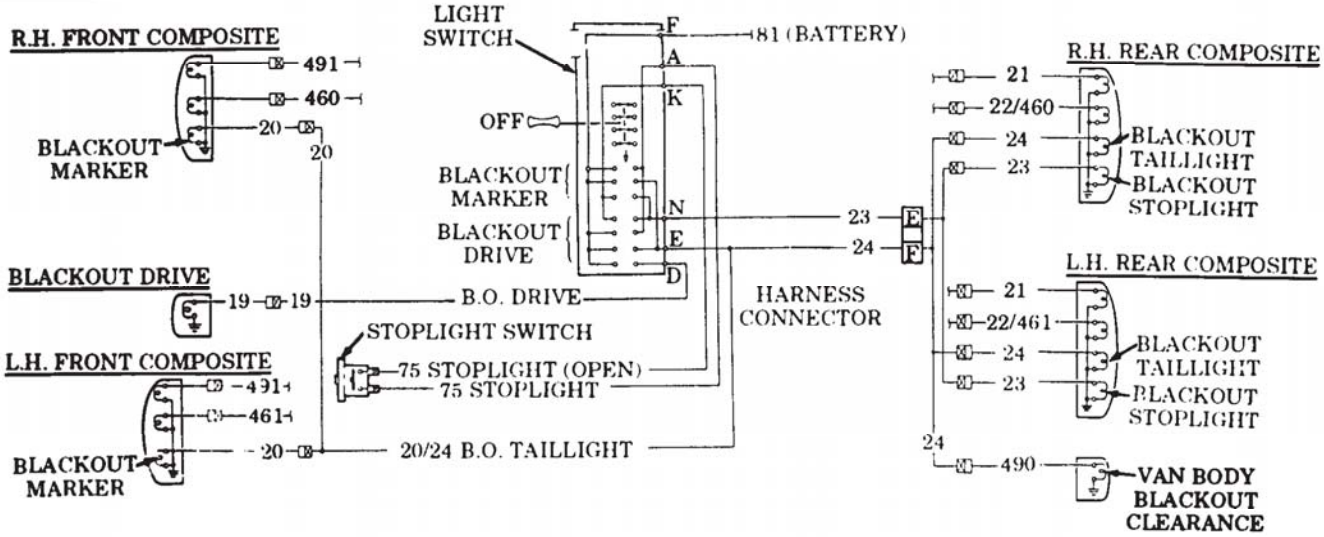

19. BLACKOUT HEADLAMP DOES NOT LIGHT

Test 1. Test battery voltage at blackout drive light.

Step 1. Turn main light switch to OFF position.

Step 2. Disconnect lead 19 from blackout drive light.

Step 3. Turn main light switch to BLACKOUT DRIVE position.

Step 4. Set multimeter to a range that will measure 24 volts.

Step 5. Check for battery voltage on contact end of lead 19.

a. If battery voltage is present, go to test 2.

b. If battery voltage is not present, go to malfunction 15, test 3 and check front wiring harness pin D.

Test 2. Test continuity of filament in blackout drive light.

Step 1. Set multimeter to RX1 scale.

Step 2. Check continuity between frame ground and lead 19 attached to rear of blackout drive light.

a. Replace blackout drive light lamp if continuity is not present (para. 4-41).

b. If continuity is present, check for corroded contacts at lamp and at lead 19 connection to front wiring harness. Connect lead 19.

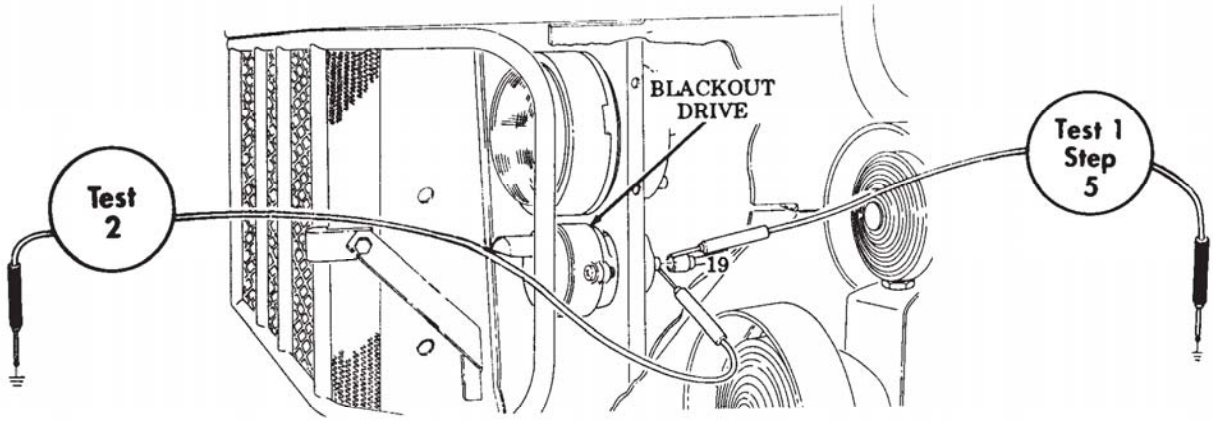

END OF TESTING!

Table 2-4. Electrical Troubleshooting (Contd).

MALFUNCTION TEST OR INSPECTION CORRECTIVE ACTION

20. FRONT BLACKOUT MARKER LAMP DOES NOT LIGHT

Test 1. Test battery voltage at front marker light.

Step 1. Turn main light switch to OFF position.

Step 2. Disconnect lead 20 at rear of front composite light on side of vehicle where light does not light.

Step 3. Turn main light switch lever to BLACKOUT MARKER or BLACKOUT DRIVE position.

Step 4. Set multimeter to a range that will measure 24 volts.

Step 5. Check for battery voltage at contact end of lead 20.

a. If battery voltage is present, go to test 2.

b. If battery voltage is not present, go to malfunction 15, test 3 and check wiring harness pin E.

Test 2. Test continuity of filament in blackout marker lamp.

Step 1. Set multimeter to RX1 scale.

Step 2. Check continuity between frame ground and lead 20 attached to rear of front composite light.

a. Replace blackout marker lamp if continuity is not present (para. 4-40).

b. If continuity is present, check for corroded contacts at lamp and at lead 20 connection to front wiring harness. Connect lead 20.

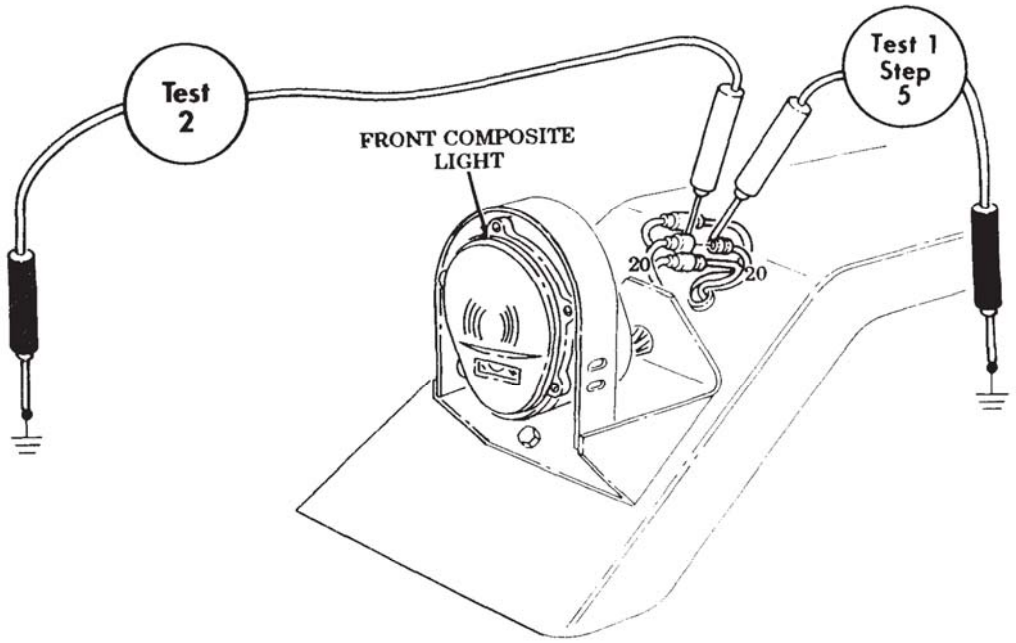

END OF TESTING!

Table 2-4. Electrical Troubleshooting (Contd).

MALFUNCTION TEST OR INSPECTION CORRECTIVE ACTION

21. BLACKOUT TAILLIGHT LAMP DOES NOT LIGHT

Test 1. Test battery voltage at rear composite light.

Step 1. Turn main light switch to OFF position.

Step 2. Disconnect lead 24 at rear composite light on side of vehicle where blackout taillight has failed.

Step 3. Turn main light switch to BLACKOUT MARKER or BLACKOUT DRIVE position.

Step 4. Set multimeter to a range that will measure 24 volts.

Step 5. Check for battery voltage at contact end of lead 24.

a. If battery voltage is present, go to test 2.

b. If battery voltage is not present, go to malfunction 15, test 3 and check front wiring harness pin E.

Test 2. Test continuity of filament in blackout taillight lamp.

Step 1. Set multimeter to RX1 scale.

Step 2. Check continuity between lead 24 attached to rear composite light and frame ground.

a. Replace blackout taillight lamp if continuity is not present (para. 4-46).

b. If continuity is present, check for corroded contacts at lamp and on lead 24 connection to rear wiring harness. Connect lead 24.

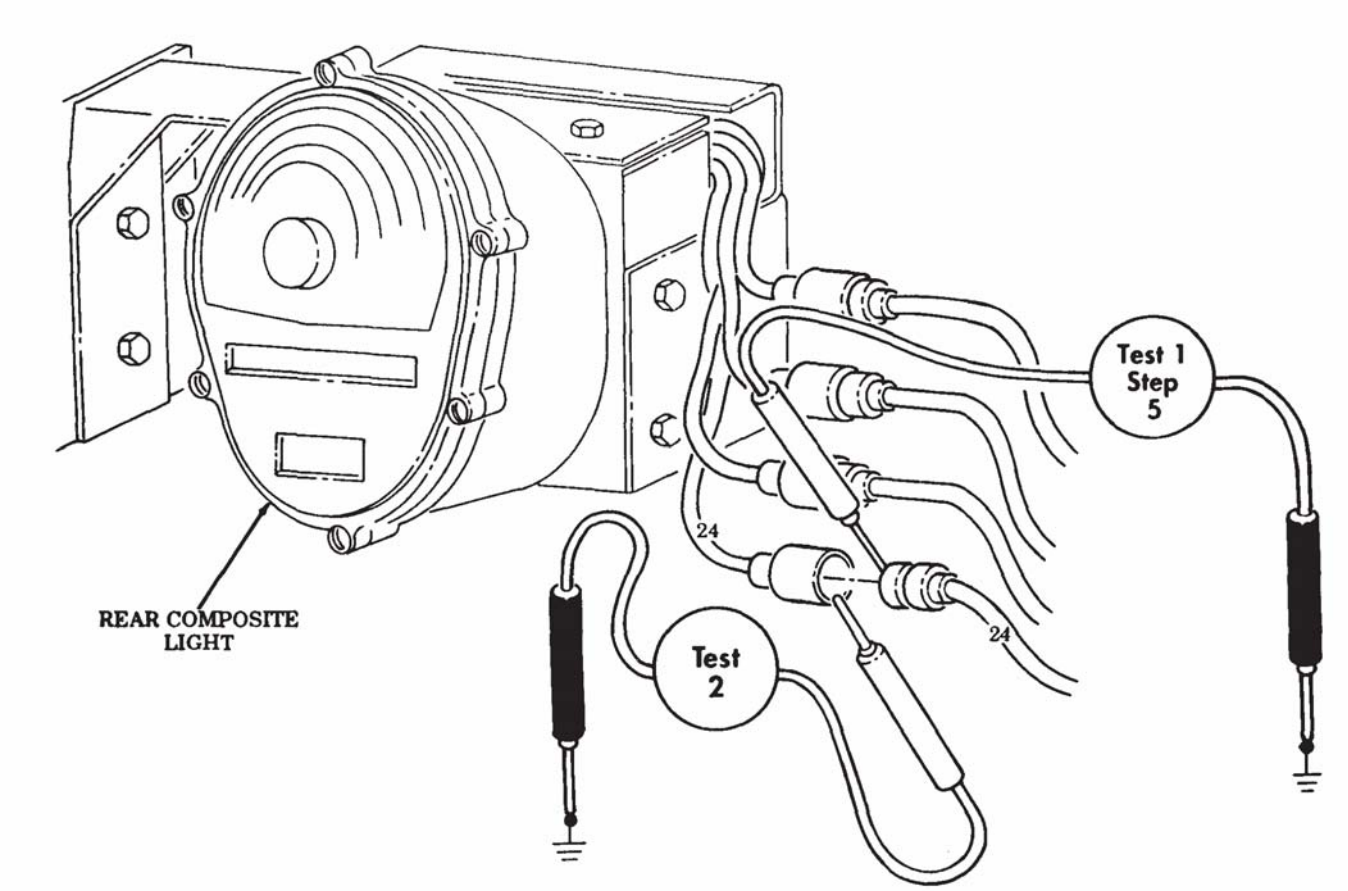

END OF TESTING!

Table 2-4. Electrical Troubleshooting (Contd).

MALFUNCTION TEST OR INSPECTION CORRECTIVE ACTION

22. BLACKOUT STOPLIGHT LAMP DOES NOT LIGHT

Test 1. Test for battery voltage at rear composite light.

Step 1. Turn main light switch to OFF position.

Step 2. Disconnect lead 23 at rear composite light on side of vehicle where blackout stoplight has failed.

Step 3. Turn main light switch to BLACKOUT MARKER or BLACKOUT DRIVE position.

Step 4. Set multimeter to a range that will measure 24 volts.

Step 5. Depress brake pedal and check for battery voltage on contact end of lead 23.

a. If battery voltage is present, go to test 2.

b. If battery voltage is not present, go to malfunction 15, test 3 and check front wiring harness pin N.

Test 2. Test continuity of filament in blackout stoplight lamp.

Step 1. Set multimeter to RX1 scale.

Step 2. Check continuity between lead 23 attached to rear composite light and frame ground pin N.

a. Replace blackout taillight lamp if continuity is not present (para. 4-46).

b. If continuity is present, check for corroded contacts at lamp and on lead 23 connection to rear wiring harness. Connect lead 23.

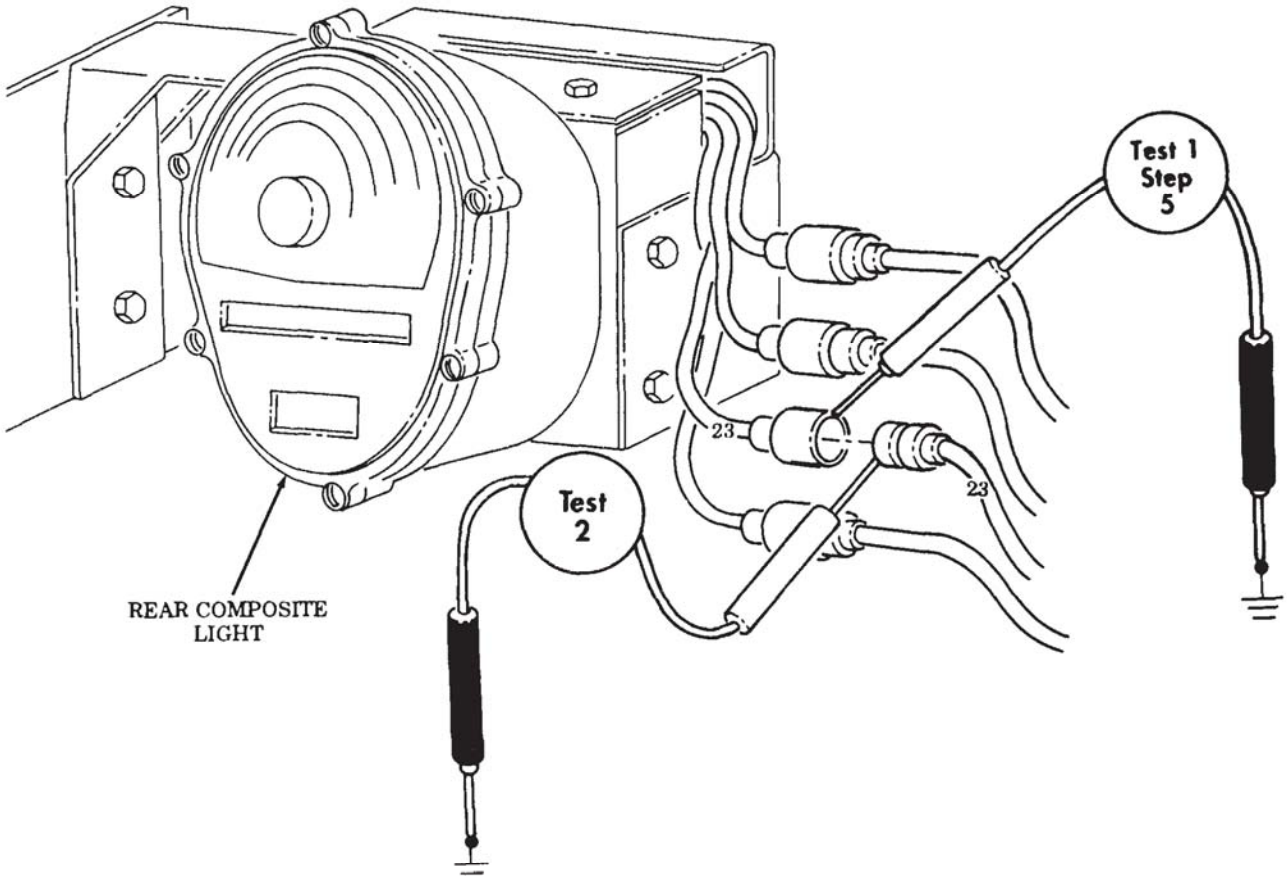

END OF TESTING!

Table 2-4. Electrical Troubleshooting (Contd).

MALFUNCTION TEST OR INSPECTION CORRECTIVE ACTION

DIRECTIONAL SIGNAL SYSTEM

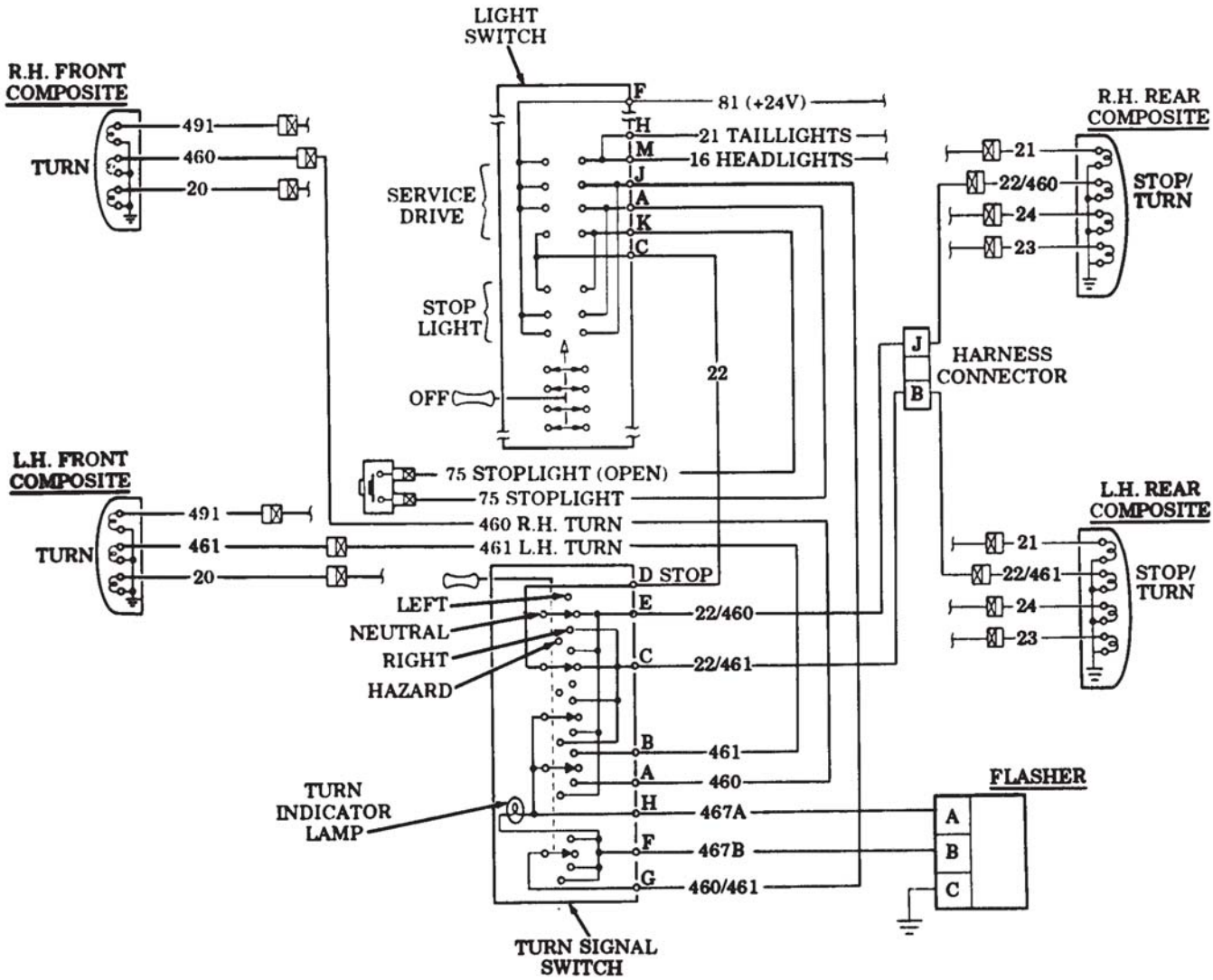

23. DIRECTIONAL SIGNAL INOPERATIVE

Test 1. Test turn signal lamps.

Step 1. Turn main light switch to SERVICE DRIVE position.

Step 2. Place turn signal lever in left or right position. Turn signals should flash on both sides.

a. If turn signal on left or right does not operate, go to test 2.

b. If turn signal on left or right operates, but does not flash, go to malfunction 25, test 2.

NOTE

Testing procedures for left and right turn signal leads 461 and 460 respectively, are performed the same, using tests 1 through 5. This test covers left side 461 turn signal circuit only.

Table 2-4. Electrical Troubleshooting (Contd).

MALFUNCTION TEST OR INSPECTION CORRECTIVE ACTION

Test 2. Test continuity of filament and socket for turn signal lamp.

Step 1. Check continuity between lead 461 attached to front composite light and frame ground.

Step 2. Set multimeter to RX1 scale.

a. Replace turn signal lamp if continuity is not present (para. 4-40).

b. If continuity is present, go to test 3.

Test 3. Test for voltage at front composite lights.

Step 1. Disconnect lead 461 at left front composite light.

Step 2. Place turn signal lever to LEFT position.

Step 3. Set multimeter to a range that will measure 24 volts.

Step 4. Touch negative lead of multimeter to frame ground.

Step 5. Touch positive lead of multimeter to contact end of lead 461 (left). Voltage should fluctuate at a rate of 1 or 2 cycles per second.

a. If voltage is not present, go to test 4.

b. If voltage is present and does not fluctuate, go to malfunction 25.

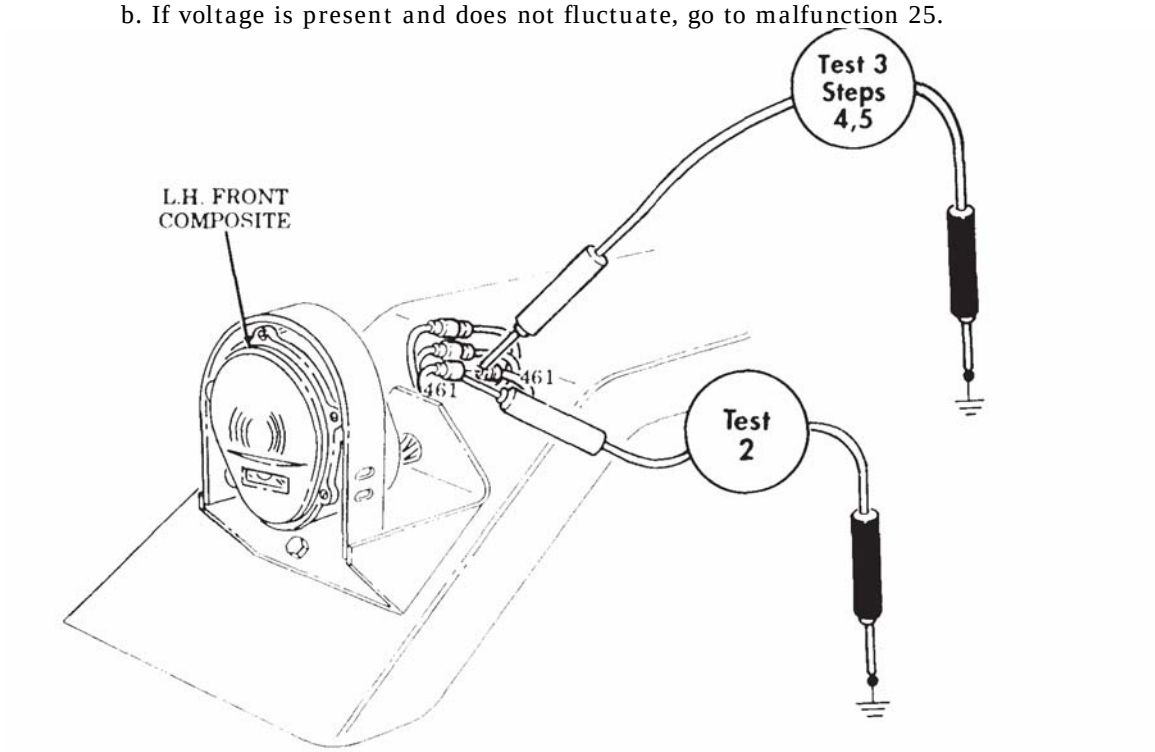

Test 4. Test continuity of front composite light wiring harness.

Step 1. Disconnect lead 461 from front composite light.

Step 2. Disconnect cable connector at turn signal switch.

Step 3. Set multimeter to RX1 scale.

Step 4. Touch negative lead of multimeter to pin B at cable connector.

Step 5. Touch positive lead of multimeter to contact end of lead 461 at front composite light. Continuity should be present.

a. If continuity is present, go to test 5.

b. Repair or redate lead 461 if continuity is not present (para. 4-52).

Table 2-4. Electrical Troubleshooting (Contd).

MALFUNCTION TEST OR INSPECTION CORRECTIVE ACTION

Test 5. Test continuity of turn signal switch.

Step 1. Disconnect cable connector at turn signal switch.

Step 2. Place turn signal switch to LEFT position.

Step 3. Touch negative lead of multimeter to pin G of turn signal switch.

Step 4. Touch positive lead of multimeter to pin B (front left) and pin C (left rear) of turn signal switch. Continuity should be present.

Replace turn signal switch if continuity is not present (para. 4-33).

Step 5. Place turn signal lever to RIGHT position.

Step 6. Touch negative lead of multimeter to pin G of turn signal switch.

Step 7. Touch positive lead of multimeter to pin A (right front) and pin E (right rear) at turn signal switch. Continuity should be present.

If continuity is not present, replace turn signal switch (para. 4-33).

Step 8. Touch negative lead of multimeter to pin G of turn signal switch.

Step 9. Touch positive lead of multimeter to pin F at turn signal switch. Continuity should be present.

a. If continuity is present, go to malfunction 25, test 2.

b. If continuity is not present, replace turn signal switch (para. 4-33).

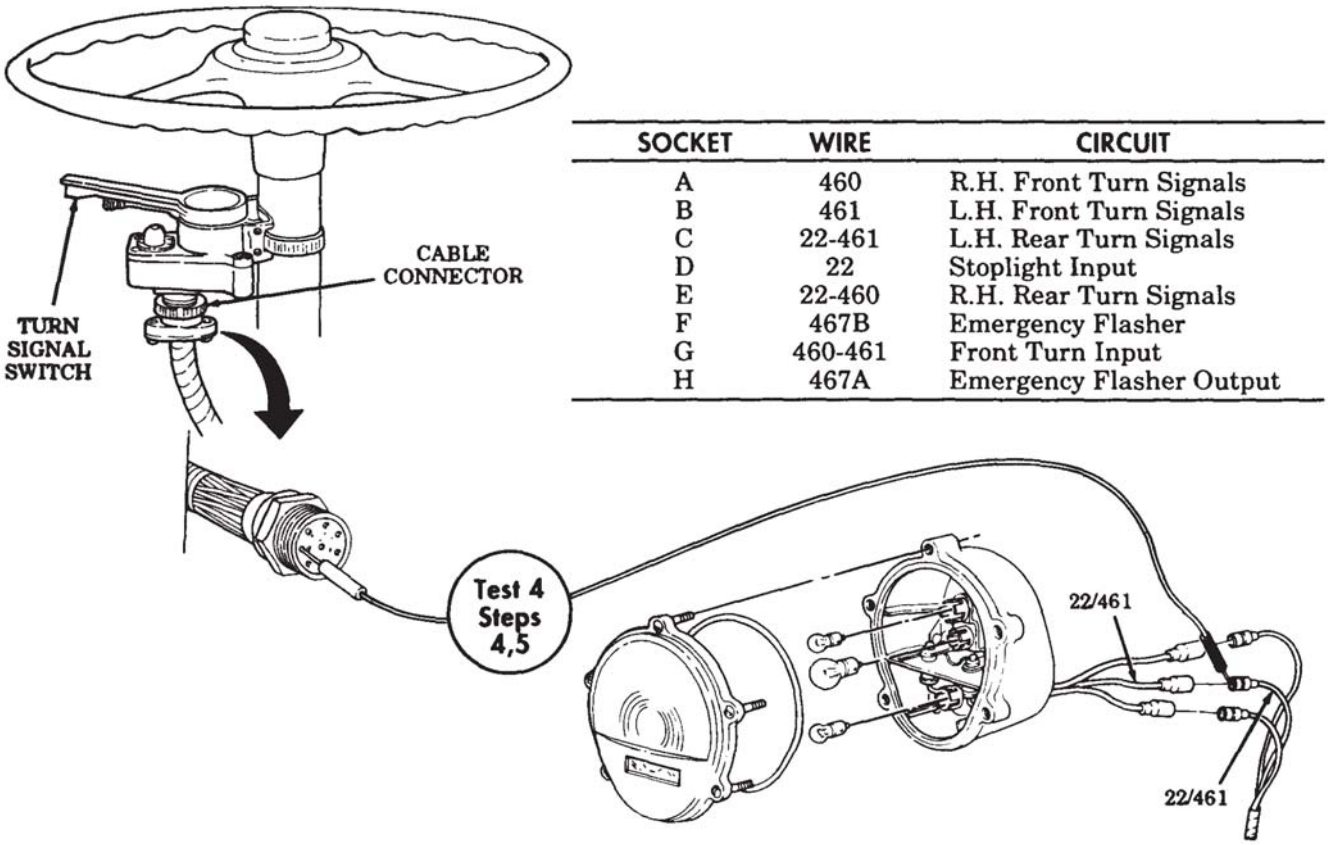

SOCKET	WIRE	CIRCUIT
A	460	R.H. Front Turn Signals
B	461	L.H. Front Turn Signals
C	22-461	L.H. Rear Turn Signals
D	22	Stoplight Input
E	22-460	R.H. Rear Turn Signals
F	467B	Emergency Flasher
G	460-461	Front Turn Input
H	467A	Emergency Flasher Output

END OF TESTING!

Table 2-4. Electrical Troubleshooting (Contd).

MALFUNCTION TEST OR INSPECTION CORRECTIVE ACTION

24. ALL STOPLIGHTS ARE INOPERATIVE

Test 1. Check stoplight switch for input voltage.

Step 1. Turn main light switch to SERVICE DRIVE position.

Step 2. Set multimeter to a voltage range that will measure 24 volts.

Step 3. Disconnect lead 75 input voltage from stoplight switch.

Step 4. Touch positive lead of multimeter to contact end of lead 75.

Step 5. Touch negative lead of multimeter to frame ground. Voltage should be present.

a. If voltage is present, go to test 2.

b. If voltage is not present, go to malfunction 15, test 3, depress brake pedal, and check pin A.

Test 2. Check stoplight switch for output voltage.

Step 1. Set multimeter to a voltage range that will measure 24 volts.

Step 2. Disconnect output lead 75 from stoplight switch.

Step 3. Touch positive lead of multimeter to contact end of stoplight switch.

Step 4. Touch negative lead of multimeter to frame ground.

Step 5. Depress brake pedal. Voltage should be present.

Replace stoplight switch if voltage is not present (para. 4-25).

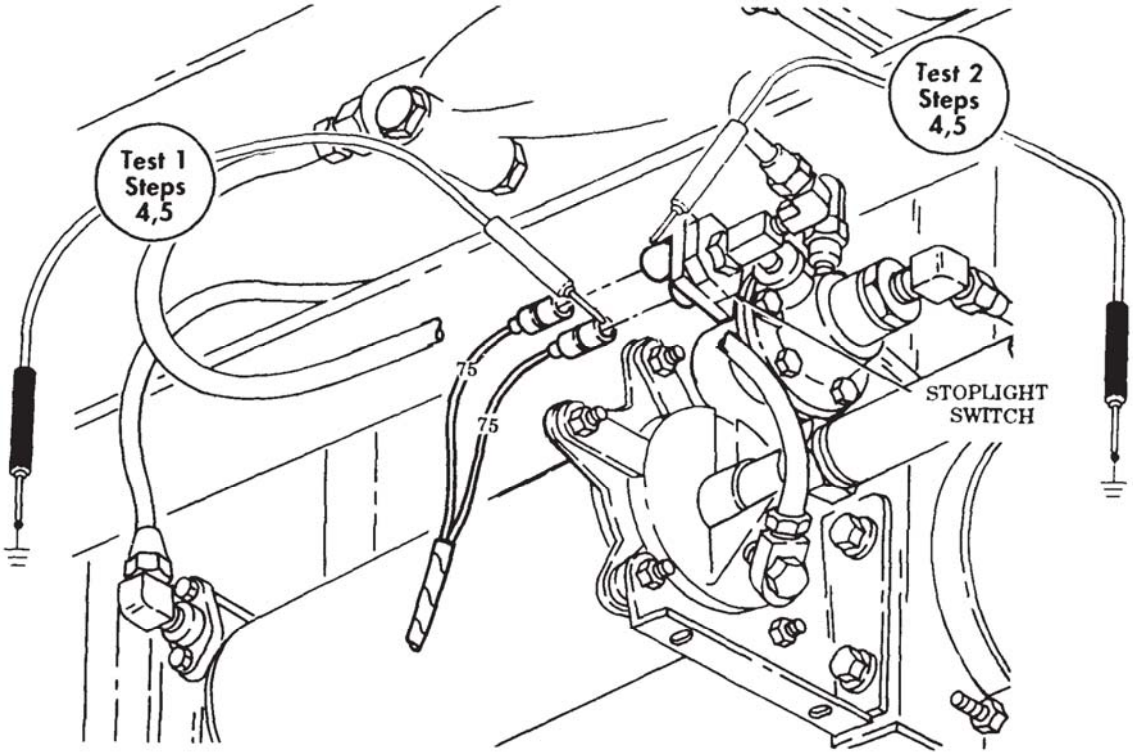

END OF TESTING!

Table 2-4. Electrical Troubleshooting (Contd).

MALFUNCTION TEST OR INSPECTION CORRECTIVE ACTION

25. BOTH DIRECTIONAL SIGNALS INOPERATIVE

Test 1. Test left and right flashers.

Step 1. Turn main light switch to SERVICE DRIVE position.

Step 2. Position turn signal lever to LEFT position.

Step 3. Position turn signal lever to RIGHT position.

a. Both left and right turn signals should flash.

b. If turn signals fail to flash, go to test 2.

Test 2. Test turn signal flasher.

Step 1. Disconnect harness connector from turn signal flasher.

Step 2. Connect jumper wire from pins 467A to 467B.

Step 3. Place turn signal lever to LEFT position.

Step 4. Place turn signal lever to RIGHT position.

a. Left and right turn signals should work but will not flash. Replace turn signal flasher if turn signals work (para. 4-32).

b. If turn signal does not work, go to malfunction 26.

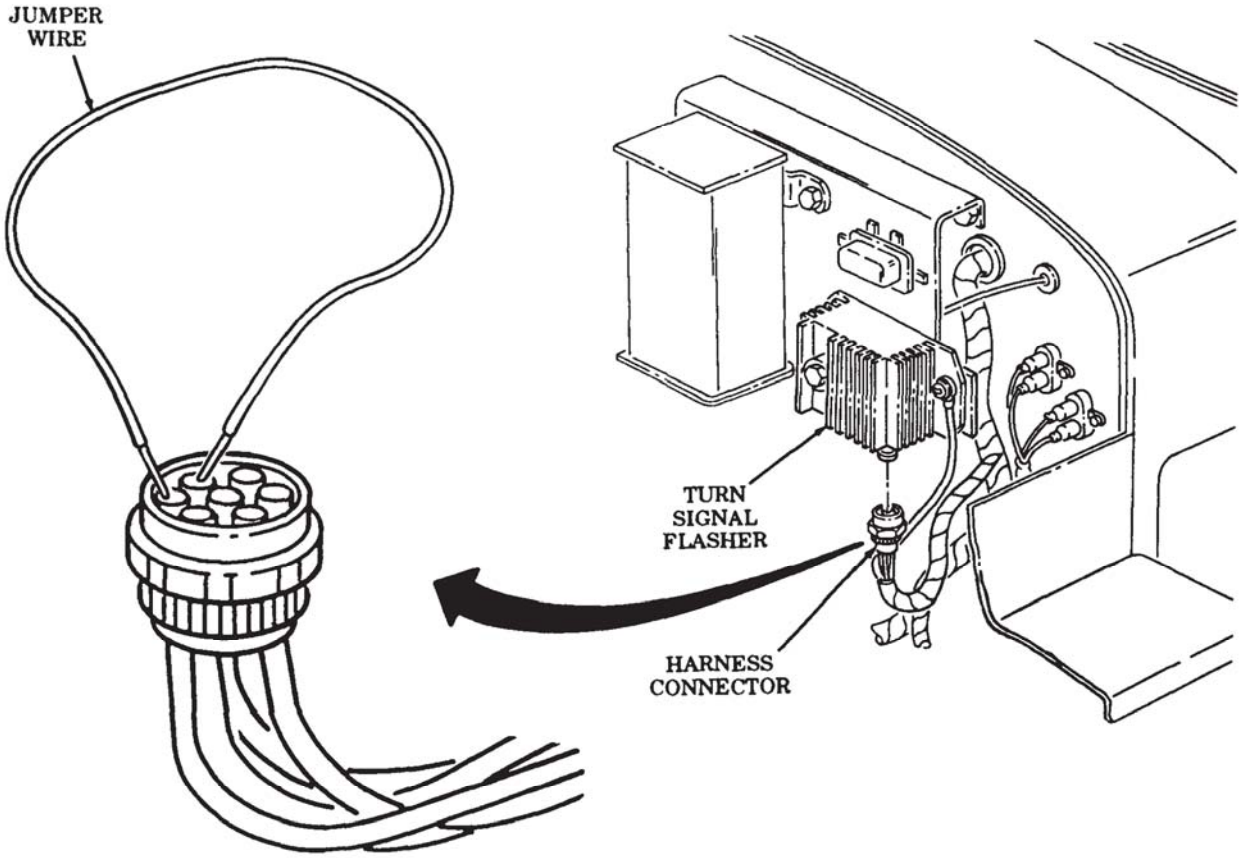

END OF TESTING!

Table 2-4. Electrical Troubleshooting (Contd).

MALFUNCTION TEST OR INSPECTION CORRECTIVE ACTION

26. TURN SIGNALS OPERATE INCORRECTLY WITH TURN SIGNAL CONTROL LEVER IN ONE OR MORE POSITIONS

Test turn signal control unit continuity.

Step 1. Place battery switch to OFF position.

Step 2. Remove harness connector from turn signal switch.

Step 3. Set multimeter to RX1 scale.

Step 4. Replace turn signal switch if any circuit does not test as shown in chart 1 below (para. 4-33).

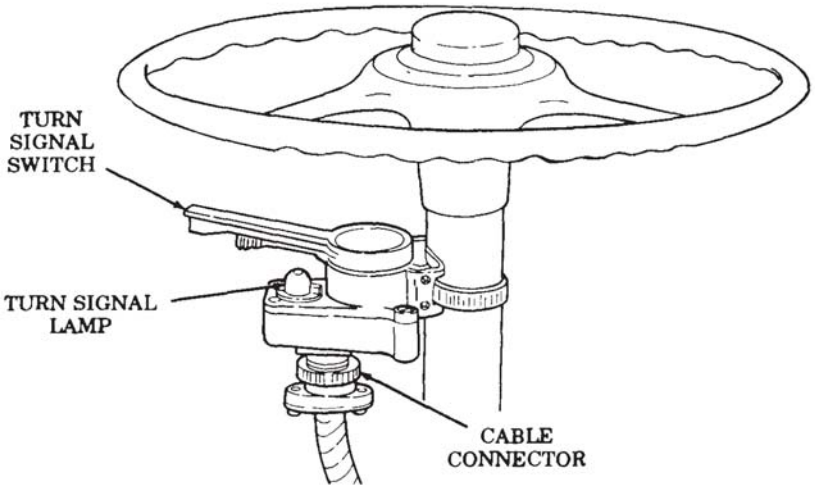

CONTROL UNIT TEST CHART

A. DIRECTIONAL SIGNAL CONTROL LEVER IN "NEUTRAL" POSITION

FROM PIN	TO PIN	CONTINUITY INDICATION
H	A	OPEN
H	B	OPEN
H	C	OPEN
H	E	OPEN
D	C	SHORTED
D	E	SHORTED
F	G	OPEN

B. DIRECTIONAL SIGNAL CONTROL LEVER IN "LEFT TURN" POSITION

FROM PIN	TO PIN	CONTINUITY INDICATION
H	B	SHORTED
H	C	SHORTED
H	A	OPEN
H	E	OPEN
F	G	SHORTED
D	E	SHORTED
D	C	OPEN

C. DIRECTIONAL SIGNAL CONTROL LEVER IN "RIGHT TURN" POSITION

FROM PIN	TO PIN	CONTINUITY INDICATION
F	G	SHORTED
H	A	SHORTED
H	E	SHORTED
H	B	OPEN
H	C	OPEN
D	C	SHORTED
D	E	OPEN

D. DIRECTIONAL SIGNAL CONTROL LEVER IN "HAZARD WARNING" POSITION

FROM PIN	TO PIN	CONTINUITY INDICATION
H	A	SHORTED
H	B	SHORTED
H	C	SHORTED
H	E	SHORTED
D	E	OPEN
D	C	OPEN
F	G	SHORTED

END OF TESTING!

Table 2-4. Electrical Troubleshooting (Contd).

MALFUNCTION TEST OR INSPECTION CORRECTIVE ACTION

27. ONE OR MORE FLOODLIGHTS DO NOT OPERATE

Test 1. Test battery and ignition switch.

Step 1. Position battery switch to ON position.

Step 2. Position ignition switch to RUN position.

Step 3. Turn ignition switch to START and release. Engine should crank.

a. If engine cranks, go to test 2.

b. If engine fails to crank, go to malfunction 1, Battery System.

Test 2. Test floodlights connection voltage.

Step 1. Check for loose connections at floodlights wiring harness and broken floodlights.

Step 2. Position battery switch to ON position and ignition switch to RUN position.

Step 3. Disconnect two leads behind malfunctioning floodlight.

a. Boom floodlights: W 1-2 voltage input
W 3-3 ground

b. Tank floodlights: W 1-3 voltage input
W 3-4 ground

c. Gondola floodlight: W1-4 voltage input
W3-5 ground

Step 4. Position floodlight switch to ON position.

Step 5. Set multimeter to a range that will measure 24 volts.

Step 6. Touch positive lead of multimeter to contact end of voltage input lead.

Step 7. Touch negative lead of multimeter to contact end of ground lead. Voltage should be present.

a. Replace floodlight if voltage is present (para. 4-42).

b. If voltage is not present, go to test 3.

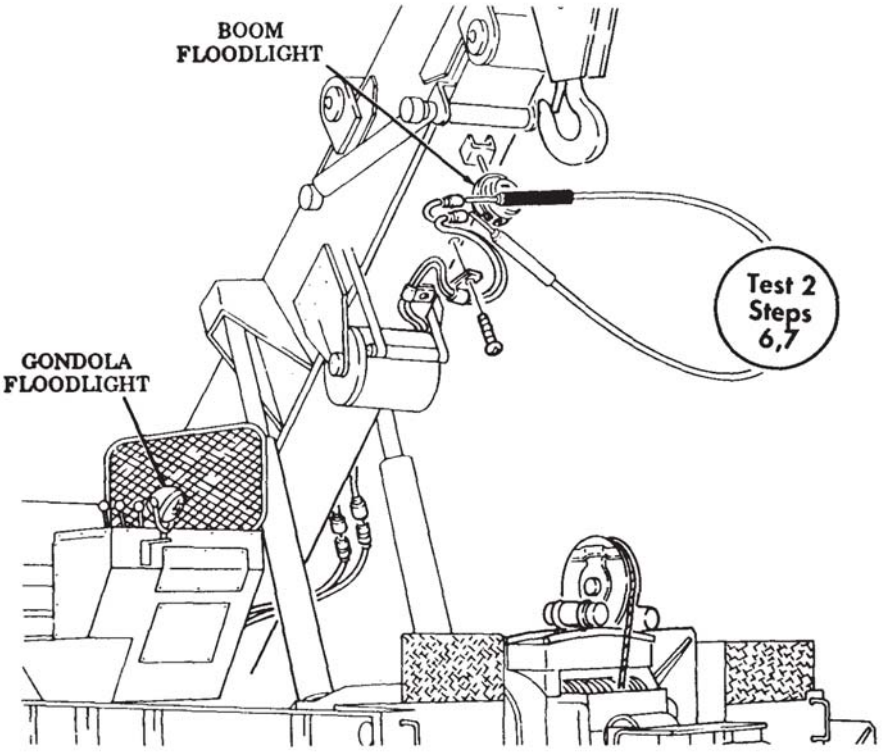

Table 2-4. Electrical Troubleshooting (Contd).

MALFUNCTION TEST OR INSPECTION CORRECTIVE ACTION

Test 3. Test floodlight switch for power input.

Step 1. Position battery switch to ON position.

Step 2. Set multimeter to a range that will measure 24 volts.

Step 3. Disconnect two leads 87 (pins A and D).

Step 4. Touch positive lead of multimeter to lead 87.

Step 5. Touch negative lead of multimeter to frame ground. Voltage should be present.

a. If voltage is present, go to test 4.

b. If voltage is not present, go to test 7.

Test 4. Test floodlight switch for power output.

Step 1. Position battery switch to ON position.

Step 2. Position floodlight switch to ON.

Step 3. Set multimeter to a range that will measure 24 volts.

Step 4. Disconnect two leads 87 (pins B and C).

Step 5. Touch positive lead of multimeter to lead 87.

Step 6. Touch negative lead of multimeter to frame ground. Voltage should be present.

a. If voltage is present, go to test 5.

b. Replace floodlight switch if voltage is not present (para. 4-17).

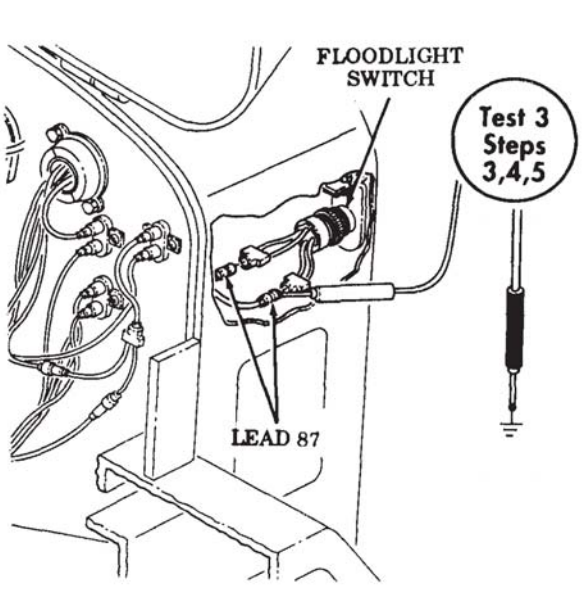

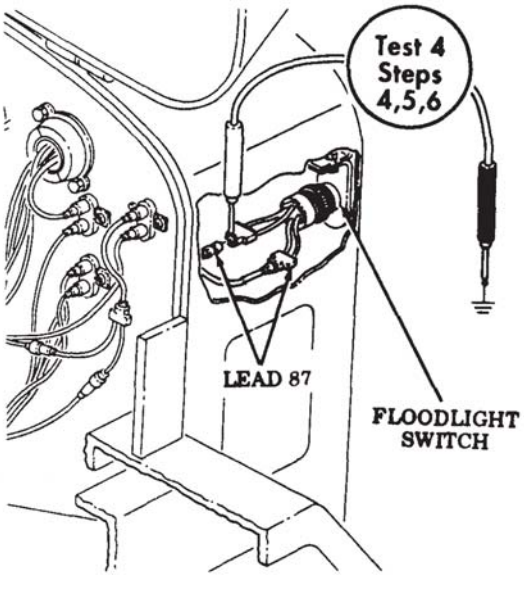

Table 2-4. Electrical Troubleshooting (Contd).

MALFUNCTION TEST OR INSPECTION CORRECTIVE ACTION

Test 5. Test wiring harness from floodlight switch to floodlights.

Step 1. Disconnect voltage input leads W1-2, W1-3, and W1-4 at floodlights.

Step 2. Set multimeter to RX1 scale.

Step 3. Disconnect lead W1 connector.

Step 4. Touch positive lead of multimeter to contact end of lead W1-2.

Step 5. Touch negative lead of multimeter to contact end of plug at lead W1. Continuity should be present.

a. If continuity is present, go to test 6.

b. Repair or replace lead if continuity is not present (para. 4-52).

Step 6. Touch positive lead of multimeter to contact end of lead W 1-3.

Step 7. Touch negative lead of multimeter to contact end of plug at lead W1. Continuity should be present.

a. If continuity is present, go to test 6.

b. Repair or replace lead if continuity is not present (para. 4-52 or 4-53).

Step 8. Touch positive lead of multimeter to contact end of lead W 1-4.

Step 9. Touch negative lead of multimeter to contact end of plug at W1. Continuity should be present.

a. If continuity is present, go to test 6.

b. Repair or replace lead if continuity is not present (para. 4-52 or 4-53).

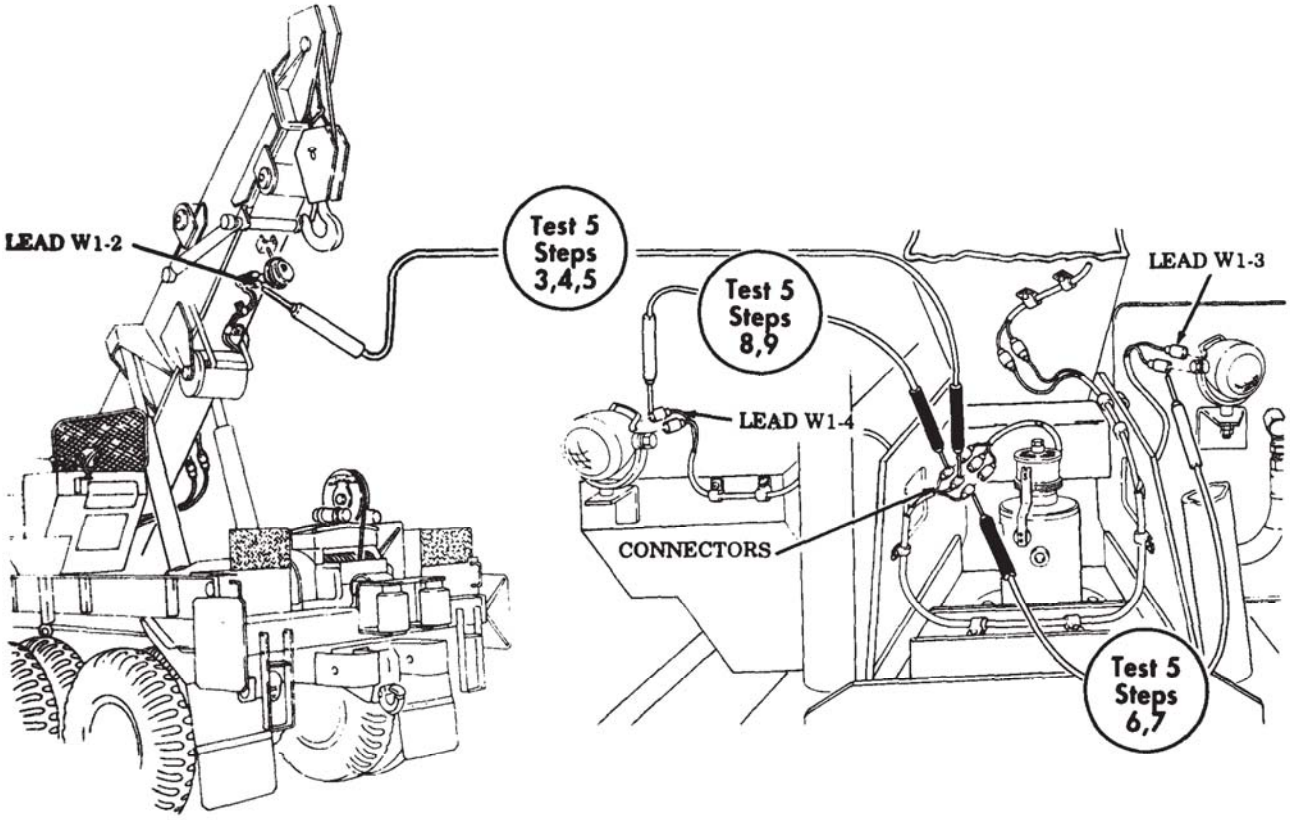

Table 2-4. Electrical Troubleshooting (Contd).

MALFUNCTION TEST OR INSPECTION CORRECTIVE ACTION

Test 6. Test wiring harness for floodlights ground.

Step 1. Disconnect ground leads W3-3, W3-4, and W3-5 for floodlights.

Step 2. Set multimeter to RX1 scale.

Step 3. Disconnect lead W3 connector.

Step 4. Touch positive lead of multimeter to contact end of lead W3-3.

Step 5. Touch negative lead of multimeter to contact end of connector at lead W3. Continuity should be present.

Step 6. Repeat steps 4 and 5 for leads W3-4 and W3-5.

a. If continuity is present, go to step 7.

b. Repair or replace lead if continuity is not present (para. 4-52 or 4-53).

Step 7. Disconnect two leads 87 at floodlight switch (pins A and D).

Step 8. Disconnect lead 87 at connector.

Step 9. Touch positive lead of multimeter to contact end of lead 87 at connector.

Step 10. Touch negative lead of multimeter to lead 87 at floodlight switch (pins A and D). Continuity should be present.

Step 11. Repeat steps 9 and 10 for lead 87 at floodlight switch (pins B and C). Continuity should be present.

a. If continuity is present, go to step 12.

b. Repair or replace lead 87 if continuity is not present (para. 4-52 or 4-53).

Step 12. Touch positive lead of multimeter to contact end of lead W4/87 going to ring collector.

Step 13. Touch negative lead of multimeter to lead W1 from ring collector. Continuity should be present.

a. If continuity is present, go to test 7.

b. If continuity is not present, notify next higher level maintenance.

Step 14. Disconnect ground lead (W6- 1) connector.

Step 15. Touch positive lead of multimeter to contact end of ground lead (W6- 1) going to ring collector.

Step 16. Touch negative lead of multimeter to contact end of lead W3 from ring collector. Continuity should be present.

a. If continuity is present, go to test 7.

b. If continuity is not present, notify your supervisor.

Table 2-4. Electrical Troubleshooting (Contd).

MALFUNCTION TEST OR INSPECTION CORRECTIVE ACTION

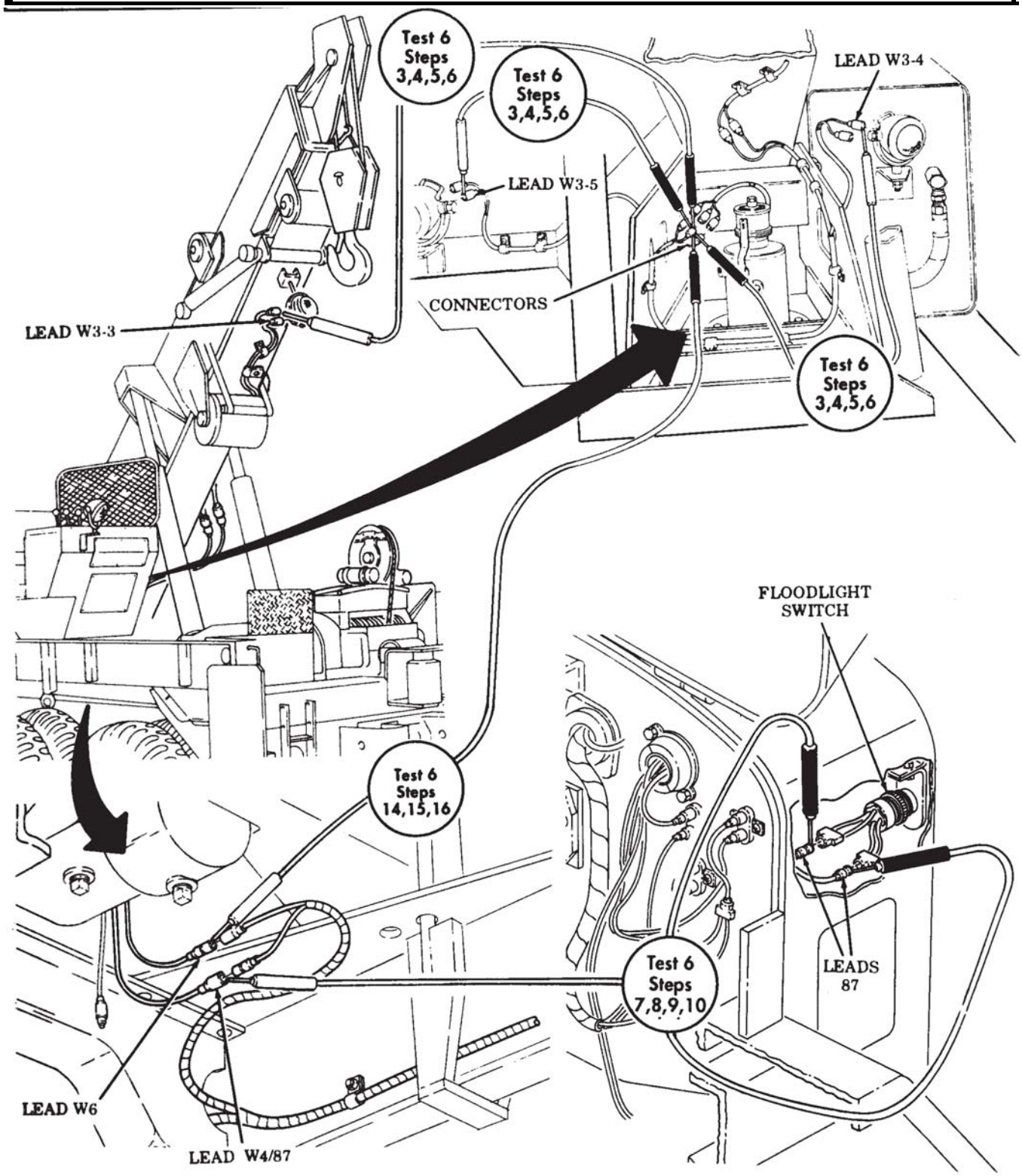

Table 2-4. Electrical Troubleshooting (Contd).

MALFUNCTION TEST OR INSPECTION CORRECTIVE ACTION

Test 7. Test wiring harness and circuit breakers.

Step 1. Position battery switch to ON position.

Step 2. Position ignition switch to RUN position.

Step 3. Set multimeter to a range that will measure 24 volts.

Step 4. Disconnect lead 10 from circuit breaker at lead 37.

Step 5. Touch positive lead of multimeter to contact end of lead 10.

Step 6. Touch negative lead of multimeter to frame ground. Voltage should be present.

a. If voltage is present, go to step 7.

b. Repair or replace lead if voltage is not present (para. 4-52 or 4-53).

Step 7. Install lead 10 into circuit breaker.

Step 8. Disconnect lead 37 from circuit breaker.

Step 9. Touch positive lead of multimeter to contact end of circuit breaker.

Step 10. Touch negative lead of multimeter to frame ground. Voltage should be present.

a. If voltage is present, go to step 11.

b. Replace circuit breaker if voltage is not present (para. 4-52 or 4-53).

Step 11. Install lead 37 into circuit breaker.

Step 12. Disconnect lead 37 from connector.

Step 13. Touch positive lead of multimeter to contact end of lead 37.

Step 14. Touch negative lead of multimeter to frame ground. Voltage should be present.

a. If voltage is present, go to step 15.

b. Repair or replace lead if voltage is not present (para. 4-52 or 4-53).

Step 15. Install lead 37 into connector.

Table 2-4. Electrical Troubleshooting (Contd).

MALFUNCTION TEST OR INSPECTION CORRECTIVE ACTION

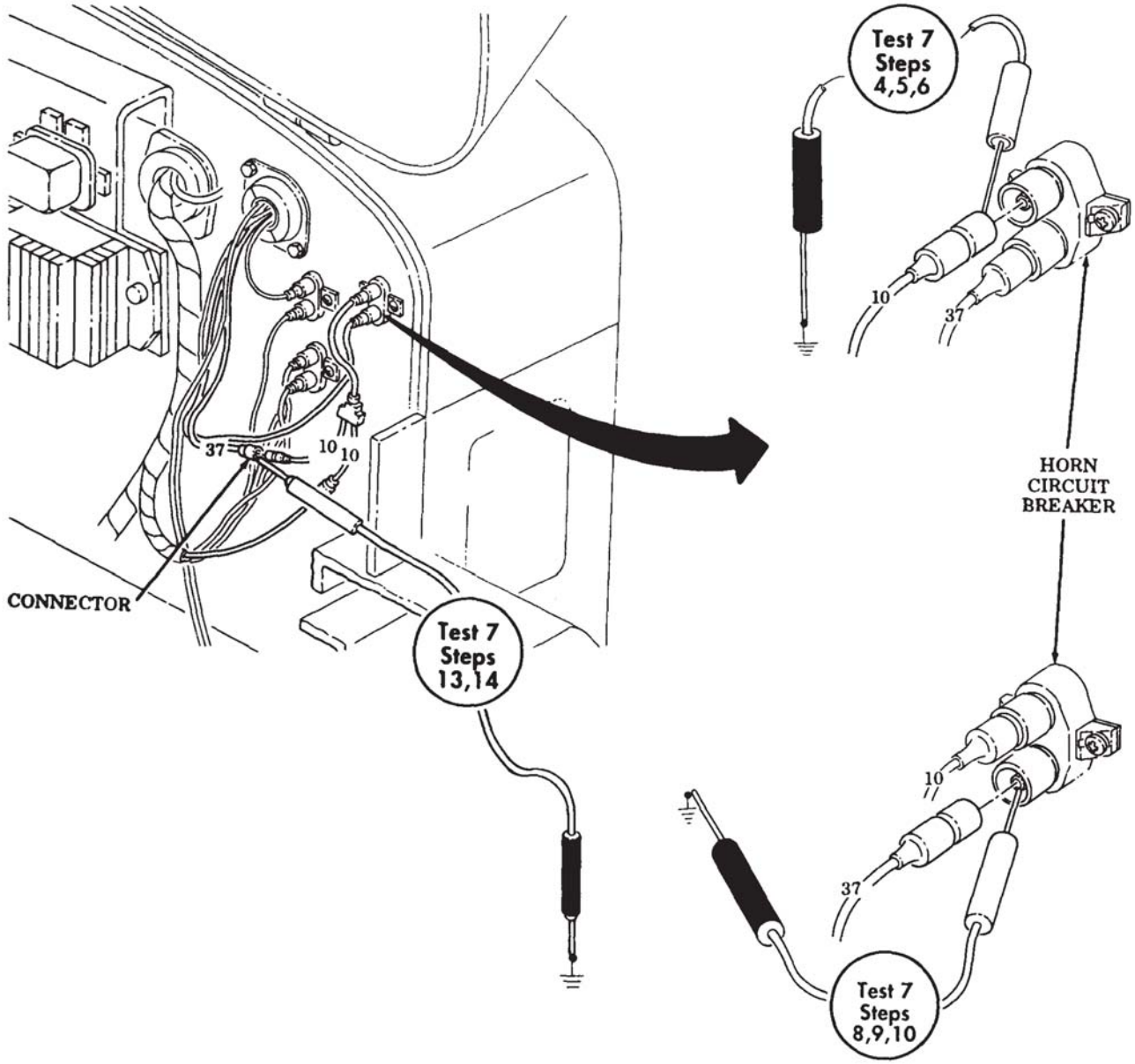

END OF TESTING!

Table 2-4. Electrical Troubleshooting (Contd).

MALFUNCTION TEST OR INSPECTION CORRECTIVE ACTION

28. WARNING LAMP FAILS TO OPERATE

Test 1. Test battery and ignition switch for voltage output.

Step 1. Position battery switch to ON position.

Step 2. Position ignition switch to RUN position.

Step 3. Push horn button. Horn should sound.

a. If horn sounds, go to test 2.

b. If horn fails to sound, go to malfunction 35.

Test 2. Check continuity of warning light.

Step 1. Disconnect warning light harness at warning lamp.

Step 2. Set multimeter to RX1 scale.

Step 3. Touch positive lead of multimeter to warning lamp input lead 325.

Step 4. Touch negative lead of multimeter to frame ground. Continuity should be present.

a. If continuity is present, go to test 3.

b. Replace warning lamp if continuity is not present (para. 4-39).

Test 3. Test circuit breaker for voltage.

Step 1. Disconnect lead 10 from circuit breaker at lead 325.

Step 2. Position battery switch to ON position.

Step 3. Position ignition switch to RUN position.

Step 4. Set multimeter to a range that will measure 24 volts.

Step 5. Touch positive lead of multimeter to contact end of lead 10.

Step 6. Touch negative lead of multimeter to frame ground. Voltage should be present.

a. If voltage is present, go to step 7.

b. Repair or replace lead if voltage is not present (para. 4-52 or 4-55).

Step 7. Install lead 10 on circuit breaker and disconnect lead 325.

Step 8. Touch positive lead of multimeter to contact end of circuit breaker.

Step 9. Touch negative lead of multimeter to frame ground. Voltage should be present.

a. If voltage is present, go to test 4.

b. Replace circuit breaker if voltage is not present (para. 4-20).

Table 2-4. Electrical Troubleshooting (Contd).

MALFUNCTION TEST OR INSPECTION CORRECTIVE ACTION

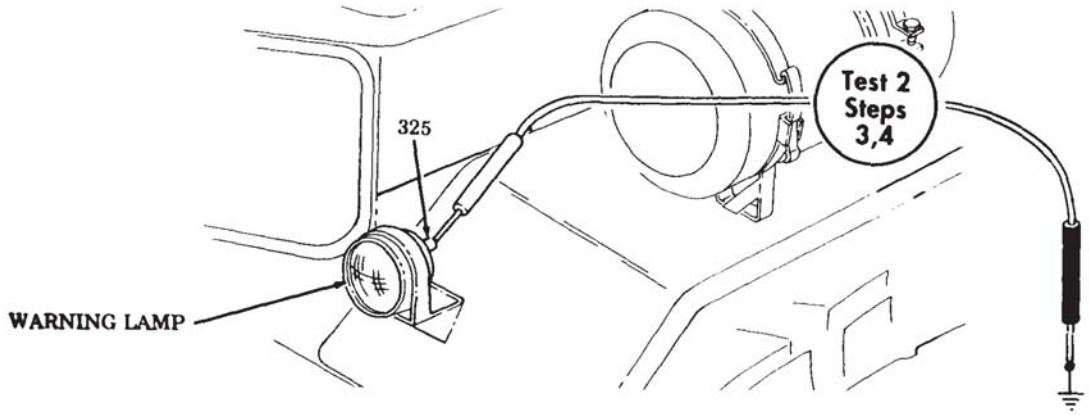

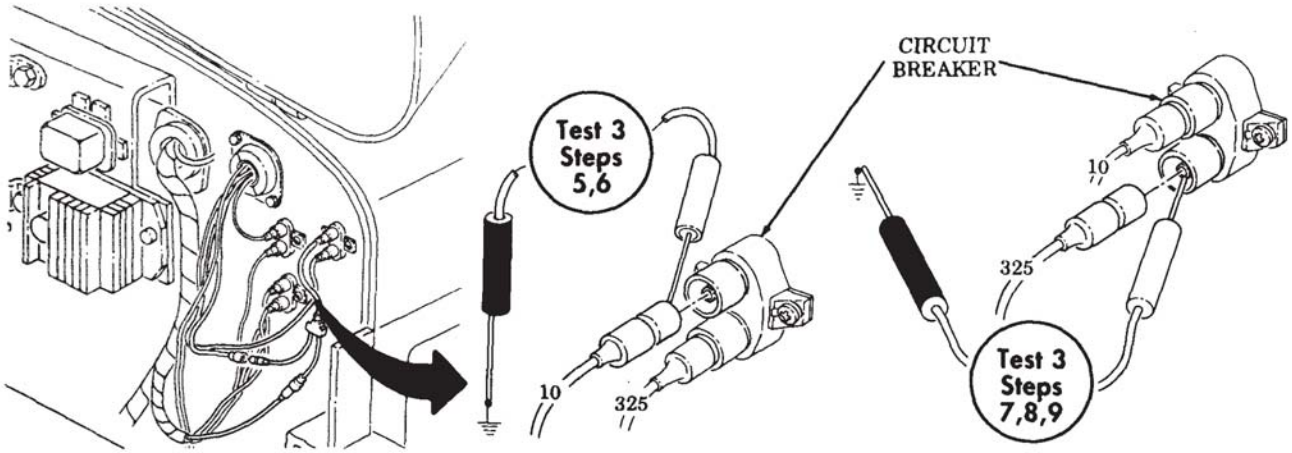

Table 2-4. Electrical Troubleshooting (Contd).

MALFUNCTION TEST OR INSPECTION CORRECTIVE ACTION

Test *4.* Test warning light switch for voltage.

Step 1. Position battery switch to ON position.
Step 2. Position ignition switch to RUN position.
Step 3. Set multimeter to a range that will measure 24 volts.
Step 4, Disconnect lead 325 from warning light switch (pin A).
Step 5. Touch positive lead of multimeter to contact end of lead 325.
Step 6. Touch negative lead of multimeter to frame ground. Voltage should be present.
a. If voltage is present, go to step 7.
b. Repair or replace lead if voltage is not present (para. 4-52 or 4-55).
Step *7.* Install lead 325 onto warning light switch (pin A).
Step 8. Disconnect lead 325 from warning light switch (pin B).
Step 9. Position warning light switch to ON position.
Step 10. Touch positive lead of multimeter to contact end of pin B.
Step 11. Touch negative lead of multimeter to frame ground. Voltage should be present.
a. If voltage is present, go to test 5.
b. Replace warning light switch if voltage is not present (para. 4-17).
Step *12.* Install lead 325 onto pin B.

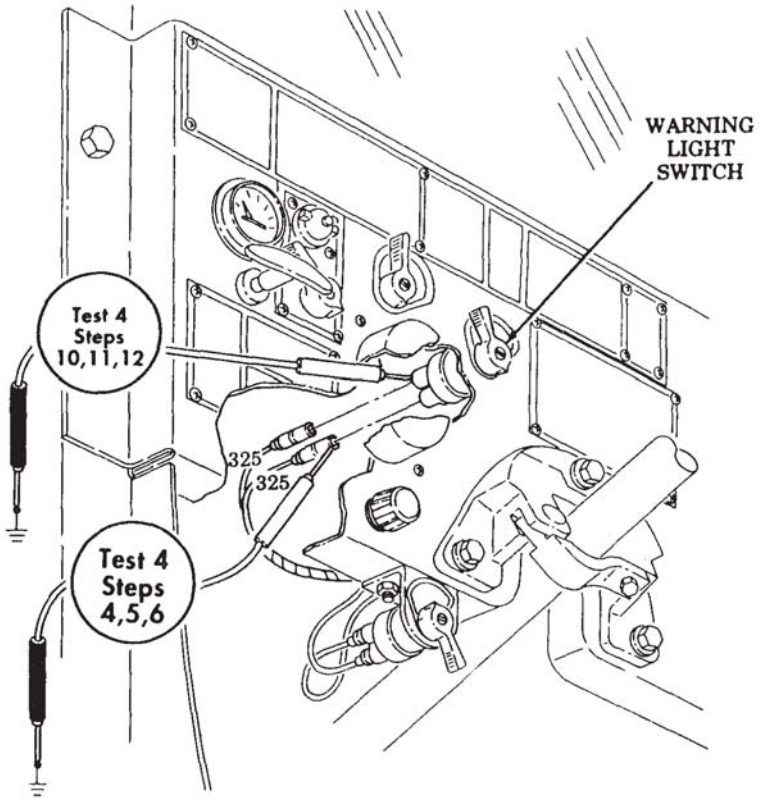

Table 2-4. Electrical Troubleshooting (Contd).

MALFUNCTION TEST OR INSPECTION CORRECTIVE ACTION

Test 5. Test warning light flasher for power input.
- Step 1. Set battery switch to ON position.
- Step 2. Set ignition switch to RUN position.
- Step 3. Set multimeter to a range that will measure 24 volts.
- Step 4. Disconnect harness connector from warning light flasher.
- Step 5. Touch positive lead of multimeter to contact end of pin A at harness connector.
- Step 6. Touch negative lead of multimeter to frame ground. Voltage should be present.
  - a. If voltage is present, go to test 6.
  - b. Repair or replace lead if voltage is not present (para. 4-52 or 4-55).

Test 6. Test warning lamp harness for power input.
- Step 1. Position battery switch to ON position.
- Step 2. Position ignition switch to RUN position.
- Step 3. Set multimeter to a range that will measure 24 volts.
- Step 4. Disconnect lead 325 at warning lamp harness.
- Step 5. Touch positive lead of multimeter to contact end of lead 325 pin A from warning switch.
- Step 6. Touch negative lead of multimeter to frame ground. Voltage should be present.
  - a. If voltage is present, check for corroded contacts at warning lamp harness.
  - b. Replace warning light flasher if voltage is not present (para. 4-34).

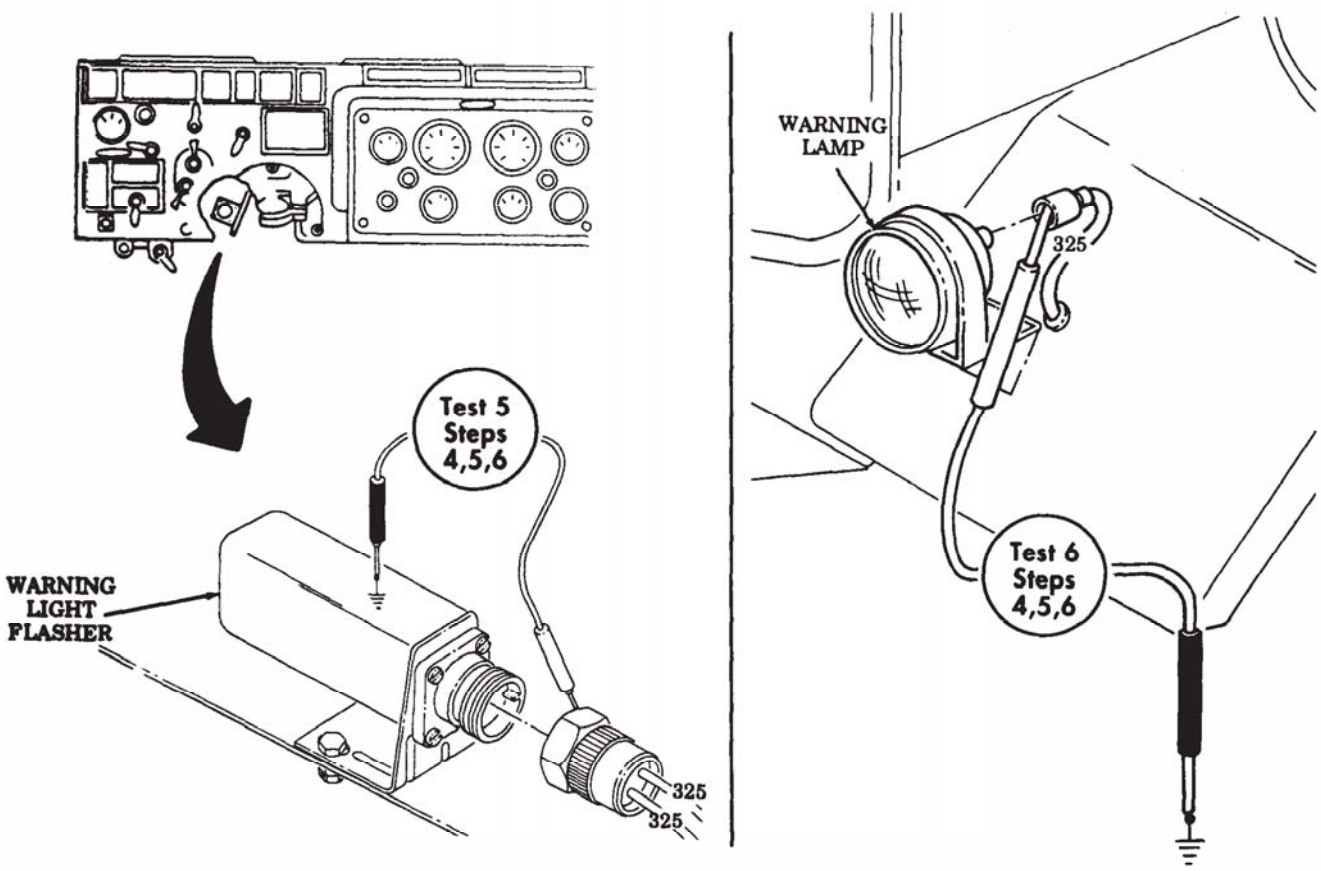

END OF TESTING!

Table 2-4. Electrical Troubleshooting (Contd).

MALFUNCTION TEST OR INSPECTION CORRECTIVE ACTION

INDICATORS, GAGES, AND WARNING SYSTEM

29. All GAGES INOPERATIVE

NOTE

If STE/ICE is available, perform NG231 - gage test (chapter 2, section VII).

Test 1. Test starter for proper operation.

Step 1. Turn battery switch to ON position.

Step 2. Turn ignition switch to START position.

a. If starter cranks engine, go to test 2.

b. If starter does not crank engine, go to malfunction 2 and troubleshoot starter circuit.

Test 2. Test instrument cluster voltage.

Step 1. Turn ignition switch to OFF position.

Step 2. Remove instrument cluster panel (para. 4-7).

Step 3. Disconnect lead 27 from the instrument cluster.

Step 4. Set multimeter to a range that will measure 24 volts.

Step 5. Touch positive lead of multimeter to contact end of lead 27.

Step 6. Touch negative lead of multimeter to frame ground. Voltage should be present.

a. If battery voltage is present, go to test 3.

b. If battery voltage is not present, go to malfunction 1.

Test 3. Check continuity of instrument cluster harness.

Step 1. Disconnect lead 27 from inoperative gage.

Step 2. Connect jumper wire from instrument panel to a good frame ground.

Step 3. Set multimeter to RX1 scale.

Step 4. Touch positive lead of multimeter to contact end of lead 27.

Step 5. Touch negative lead of multimeter to frame ground. Continuity should be present.

a. Replace instrument gage if continuity is present (para. 4-10).

b. Repair or replace lead if continuity is not present (para. 4-52).

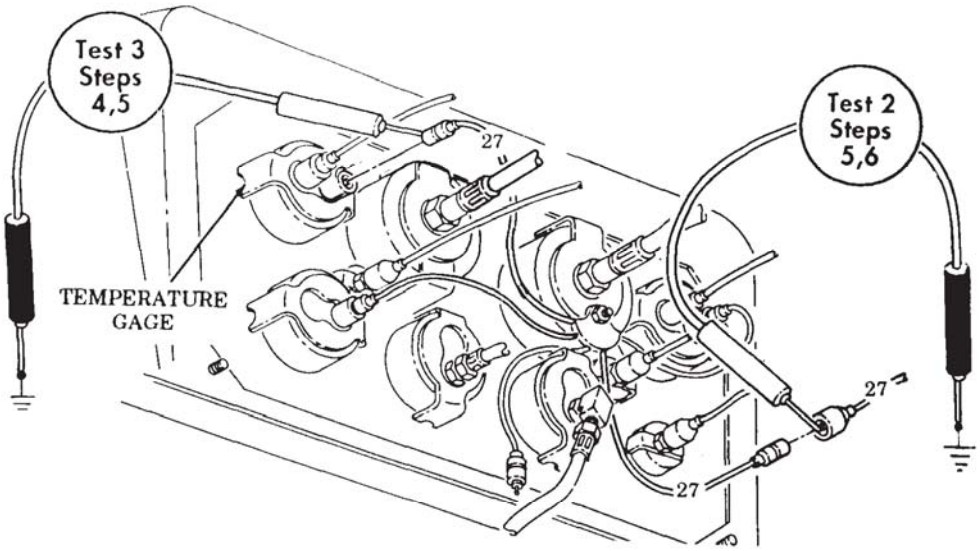

END OF TESTING!

Table 2-4. Electrical Troubleshooting (Contd).

MALFUNCTION TEST OR INSPECTION CORRECTIVE ACTION

30. COOLANT TEMPERATURE GAGE INOPERATIVE

NOTE

If STE/ICE is available, perform NG31 - gage test (chapter 2, section VII).

Test 1. Test coolant temperature gage operation.

Step 1. Disconnect lead 33 from coolant temperature sending unit.

Step 2. Turn battery switch to ON position.

Step 3. Turn ignition switch to RUN position.

Step 4. Coolant temperature gage should read minimum temperature.

Step 5. Touch contact end of lead 33 to frame ground. Coolant temperature gage should read maximum temperature.

a. If coolant temperature gage operates properly, go to test 3 and check sending unit.

b. If coolant temperature gage does not operate properly, go to test 2.

Test 2. Test for battery voltage into temperature gage, go to malfunction 29, test 2.

Test 3. Test temperature sending unit.

Step 1. Start vehicle engine (TM 9-2320-260-10).

Step 2. Set multimeter to RX1 scale.

Step 3. Touch negative lead of multimeter to engine ground.

Step 4. Touch positive lead of multimeter to sending unit. Multimeter reading should decrease as engine coolant temperature increases.

a. Replace temperature sending unit if resistance does not show any decrease as temperature increases (para. 4-28).

b. If resistance does show a decrease as temperature increases, go to test 4.

Test 4. Check continuity of lead 33.

Step 1. Disconnect lead 33 from temperature gage.

Step 2. Set multimeter to RX1 scale.

Step 3. Touch negative lead of multimeter to contact end of lead 33 at sending unit.

Step 4. Touch positive lead of multimeter to other end of lead 33.

a. Repair or replace lead 33 if continuity is not present (para. 4-52).

b. Replace temperature gage if continuity is present (para. 4-10).

Table 2-4. Electrical Troubleshooting (Contd).

MALFUNCTION TEST OR INSPECTION CORRECTIVE ACTION

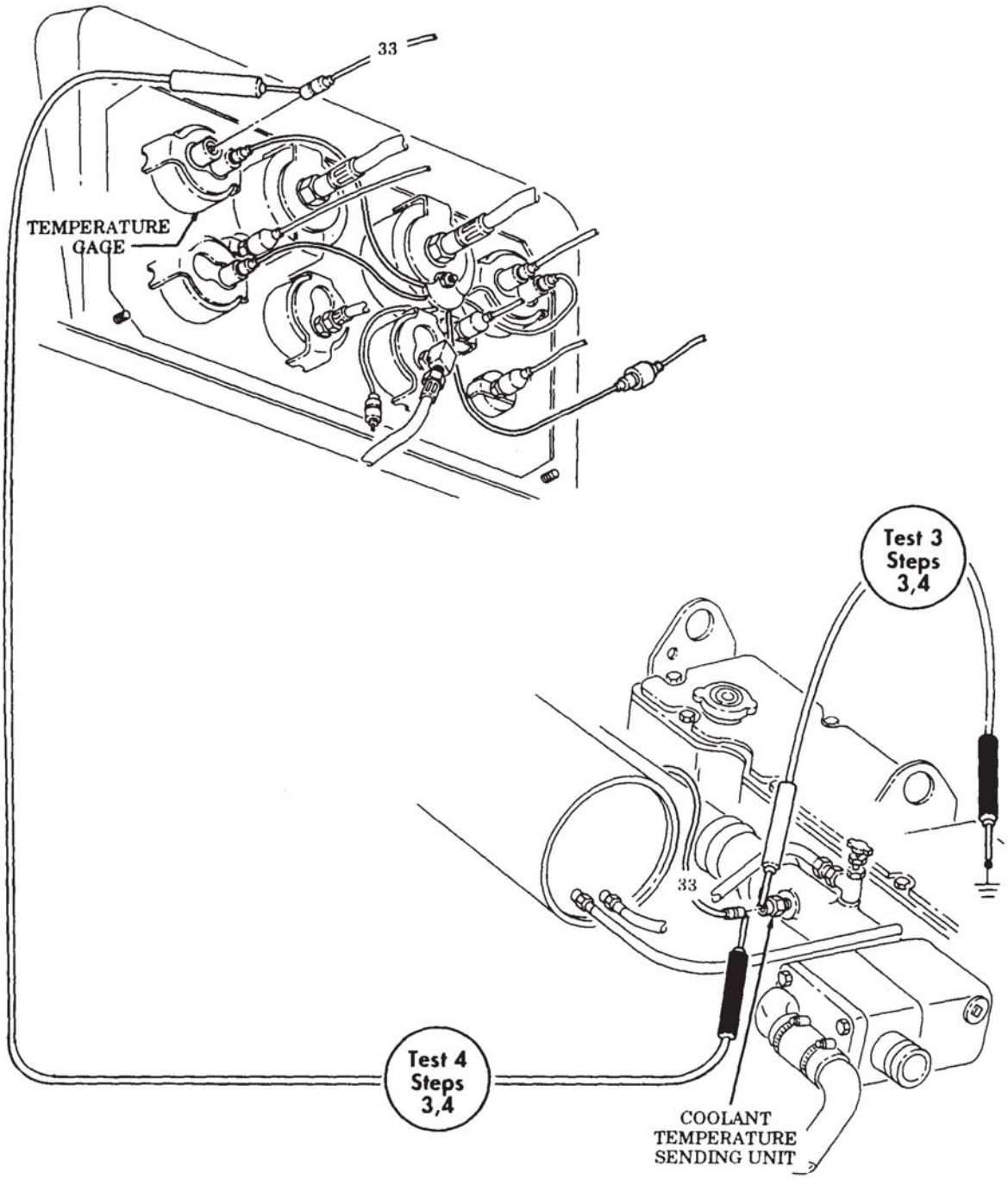

END OF TESTING!

Table 2-4. Electrical Troubleshooting (Contd).

MALFUNCTION TEST OR INSPECTION CORRECTIVE ACTION

31. FUEL GAGE INOPERATIVE

WARNING

Do not perform testing near fuel tank with fill cap or sending unit removed. Fuel may ignite, causing injury to personnel.

NOTE

Ensure fuel tank is not empty before proceeding to test 1.

If STE/ICE is available, perform NG31 - gage test (chapter 2, section VII).

Testing for left and right fuel level sending units are performed the same way, except lead 29 is for the right fuel tank and lead 28 is for the left fuel tank. The following test is for the left fuel tank.

On M817 and M818 models only, make sure fuel gage switch is positioned to the fuel tank being tested.

On M818 models. remove the deck date above the fuel tank for access to sending unit.

Test 1. Test for battery voltage to fuel level sending unit.

Step 1. Turn battery switch to ON position.

Step 2. Turn ignition switch to RUN position.

Step 3. Disconnect lead 28 from fuel level sending unit.

Step 4. Set multimeter to a voltage range that will measure 24 volts.

Step 5. Touch negative lead of multimeter to frame ground.

Step 6. Touch positive lead of multimeter to contact end of lead 28.

a. If battery voltage is present, go to test 2.

b. If battery voltage is not present, go to test 3.

Test 2. Test fuel gage operation.

Step 1. Turn battery switch and ignition switch to OFF position.

Step 2. With lead 28 already disconnected from sending unit, touch contact end to frame ground.

Step 3. Turn battery switch to ON position.

Step 4. Turn ignition switch to ON position.

Step 5. Fuel gage should read “EMPTY.”

a. If fuel gage shows “EMPTY,” go to step 6.

b. Replace fuel gage if fuel gage does not show "EMPTY" (para. 4-10).

Step 6. Lift lead 28 from frame ground. Fuel gage should now read "FULL."

a. If fuel gage shows “FULL,” it is operational. Remove fuel level sending unit (para. 4-24), and go to test 5.

b. Replace fuel gage if fuel gage does not show “FULL” (para. 4-10).

Test 3. Test fuel gage voltage.

Go to malfunction 29, test 2 and check battery voltage into fuel gage.

Test 4. Test continuity of lead 28.

Step 1. Turn ignition switch and battery switch to OFF position.

Step 2. Disconnect lead 28 from fuel level sending unit.

Step 3. Disconnect lead 28 at fuel gage.

Step 4. Connect jumper wire from contact end of lead 28 at fuel level sending unit to frame ground.

Table 2-4. Electrical Troubleshooting (Contd).

MALFUNCTION TEST OR INSPECTION CORRECTIVE ACTION

Step 5. Set multimeter to RX1 scale.
Step 6. Touch negative lead of multimeter to frame ground.
Step 7. Touch positive lead of multimeter to contact end of lead 28 at fuel gage. Continuity should be present.
a. If continuity is present, reconnect wires and recheck fuel gage operation.
b. Repair or replace wiring if continuity is not present (para. 4-52).

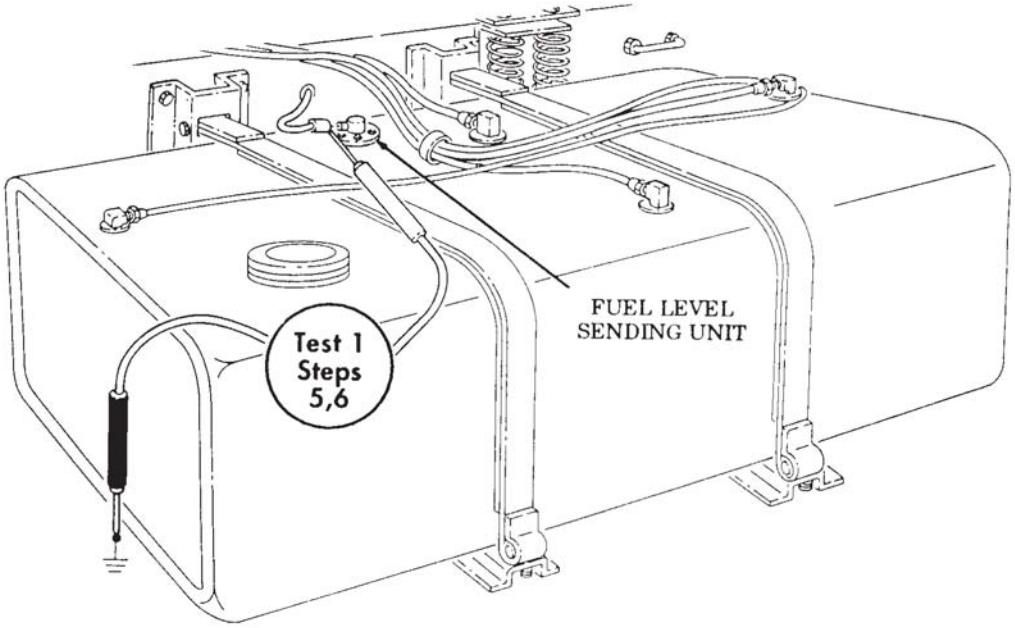

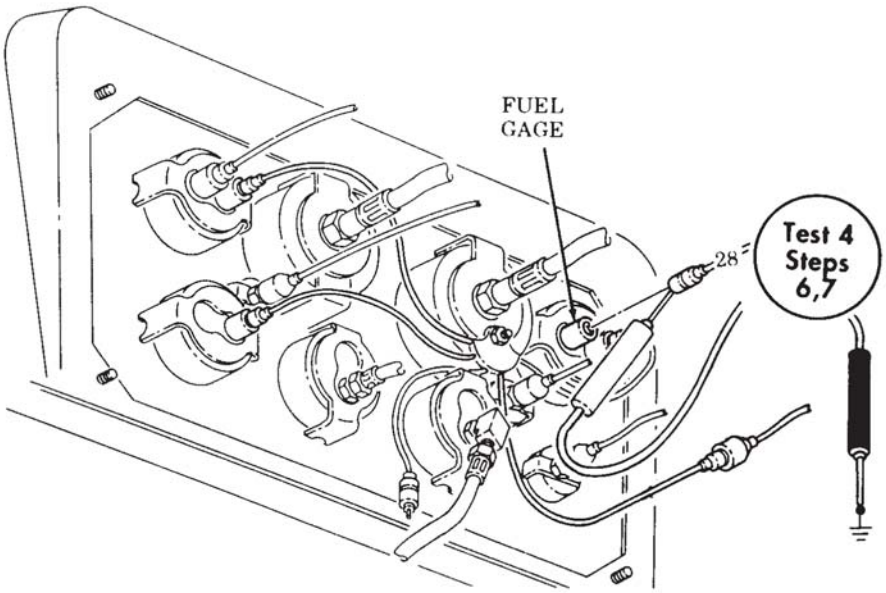

Table 2-4. Electrical Troubleshooting (Contd).

MALFUNCTION TEST OR INSPECTION CORRECTIVE ACTION

Test 5. Test continuity of fuel level sending unit.

Step 1. Set multimeter to RX1 scale.

Step 2. Connect multimeter leads to fuel level sending unit.

Step 3. Position float in empty position.

a. If resistance is between 0.00 and 0.50 ohms, go to step 4.

b. Replace fuel level sending unit if resistance is not between 0.00 and 0.50 ohms (para. 4-24)

Step 4. Set multimeter to RX10 scale.

Step 5. Position float in full position.

a. If resistance is between 29.50 and 31.50, reinstall fuel level sending unit (para. 4-24) and recheck gage operation.

b. Replace fuel level sending unit if resistance is not between 29.50 and 31.50 (para. 4-24).

Test 6. Test fuel gage switch operation (M817 and M818 only).

Step 1. Disconnect lead 28 from fuel gage switch output pin A.

Step 2. Disconnect leads 28 and 29 inputs from pins B and D.

Step 3. Position fuel gage switch to “L.”

Step 4. Set multimeter to RX1 scale.

Step 5. Touch positive lead of multimeter to pin B.

Step 6. Touch negative lead of multimeter to pin A. Continuity should be present.

a. If continuity is present, go to step 7.

b. Replace fuel selector switch if continuity is not present (para. 4-18).

Step 7. Position fuel gage switch to “R.”

Step 8. Touch positive lead of multimeter to pin D.

Step 9. Touch negative lead of multimeter to pin A. Continuity should be present.

a. If continuity is present, go to test 7.

b. Replace fuel selector switch if continuity is not present (para. 4-18).

Test 7. Test continuity of lead 28 (M817 and M818 only).

Step 1. Disconnect lead 28 from fuel gage switch output pin A.

Step 2. Disconnect lead 28 from fuel gage.

Step 3. Set multimeter to RX1 scale.

Step 4. Touch multimeter positive lead to contact end of lead 28 at fuel gage switch.

Step 5. Touch multimeter negative lead to contact end of lead 28 at fuel gage.

a. Continuity should be present.

b. Repair or replace lead 28 if continuity is not present (para. 4-52).

Table 2-4. Electrical Troubleshooting (Contd).

MALFUNCTION TEST OR INSPECTION CORRECTIVE ACTION

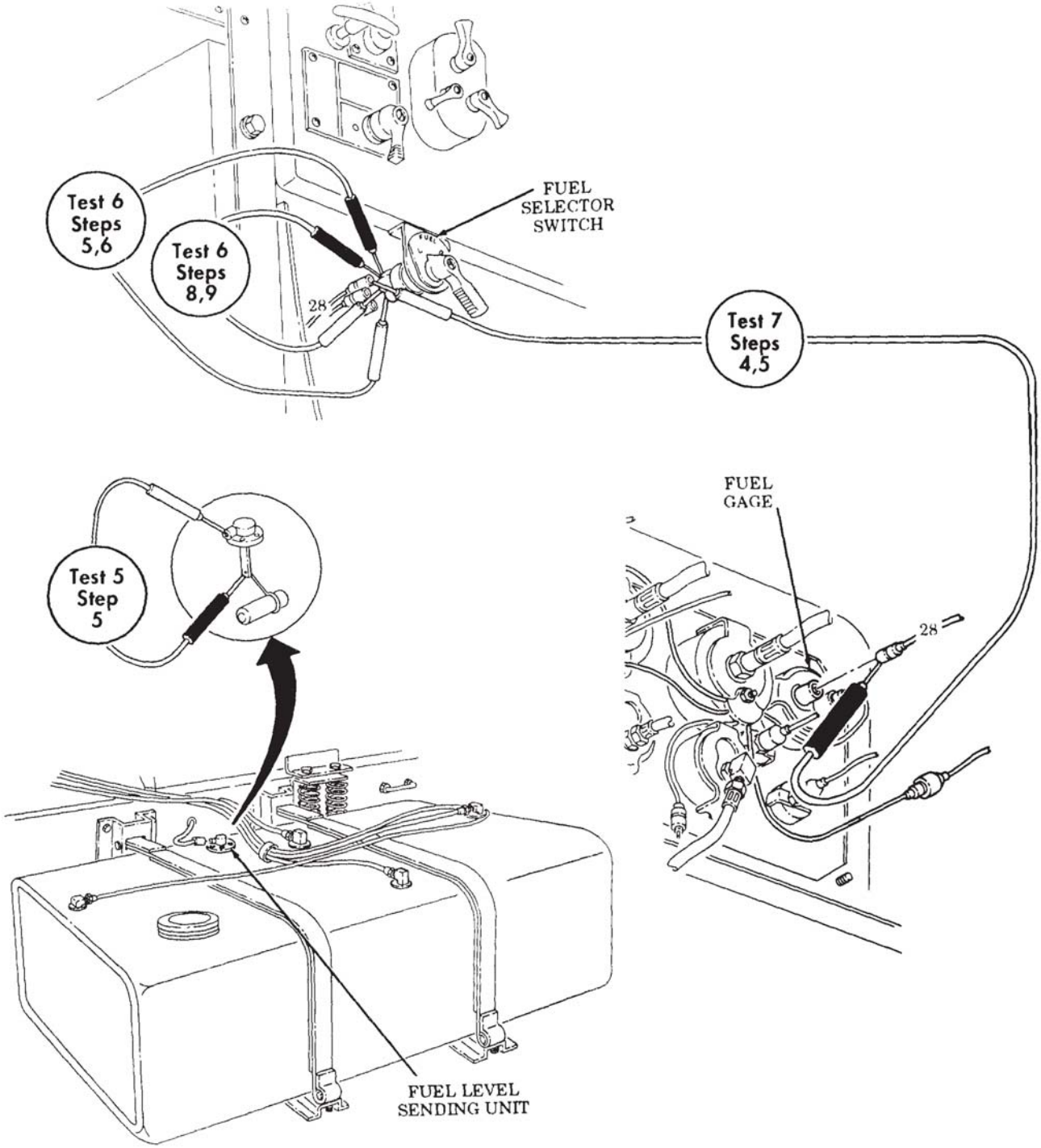

END OF TESTING!

Table 2-4. Electrical Troubleshooting (Contd).

MALFUNCTION TEST OR INSPECTION CORRECTIVE ACTION

32. VOLTMETER GAGE INOPERATIVE

NOTE

If STE/ICE is available, perform NG31 - gage test (chapter 2, section VII).

Test 1. Test voltmeter gage.

Step 1. Turn battery switch to ON position.

Step 2. Turn ignition switch to RUN position. Do not start engine.

Step 3. Voltmeter indicator should rest between lower edge of GREEN area and upper edge of YELLOW area on gage (24 volts).

Step 4. Start engine (TM 9-2320-260-10) and observe voltmeter on instrument cluster.

Step 5. Voltmeter indicator should rise as engine speeds up and stop over white dot in green area (approximately 28.0 volts).

If voltmeter does not perform as specified in steps 3 and 5 above, stop engine and go to test 2.

Test 2. Test battery voltage to voltmeter. Go to malfunction 29, test 2.

Test 3. Check frame ground to multimeter.

Step 1. Set multimeter to RX1 scale.

Step 2. Touch negative lead of multimeter to panel ground on instrument cluster.

Step 3. Touch positive lead of multimeter to voltmeter gage bracket. Continuity should be present. Make sure instrument panel is grounded.

a. If continuity is present, recheck gage operation.

b. If continuity is not present, remove voltmeter and check for corrosion around voltmeter body.

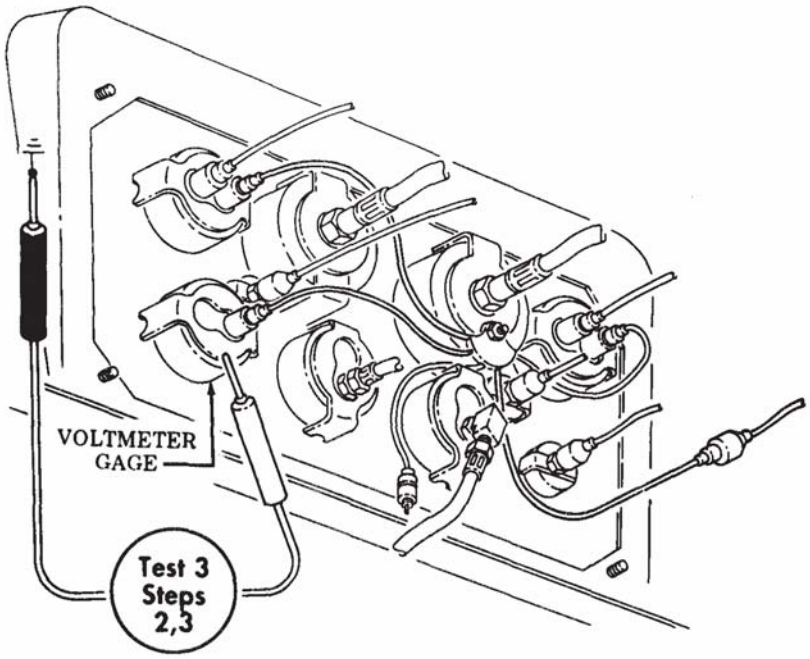

END OF TESTING!

Table 2-4. Electrical Troubleshooting (Contd).

MALFUNCTION TEST OR INSPECTION CORRECTIVE ACTION

33. TACHOGRAPH LAMPS FAIL TO OPERATE

Check tachograph for power input.

Step 1. Set multimeter to a range that will measure 24 volts.

Step 2. Disconnect leads 27 and 40 connectors.

Step 3. Start engine (TM 9-2320-260-10).

Step 4. Touch positive lead of multimeter to contact end of lead 27.

Step 5. Touch negative lead of multimeter to frame ground.

Step 6. Touch positive lead of multimeter to contact end of lead 40. Voltage should be present.

Step 7. Touch negative lead of multimeter to frame ground. Voltage should be present.

a. If voltage is present at both leads tested, go to step 8.

b. If voltage is not present, go to malfunction 29, test 2.

Step 8. Install lead 27 and 40.

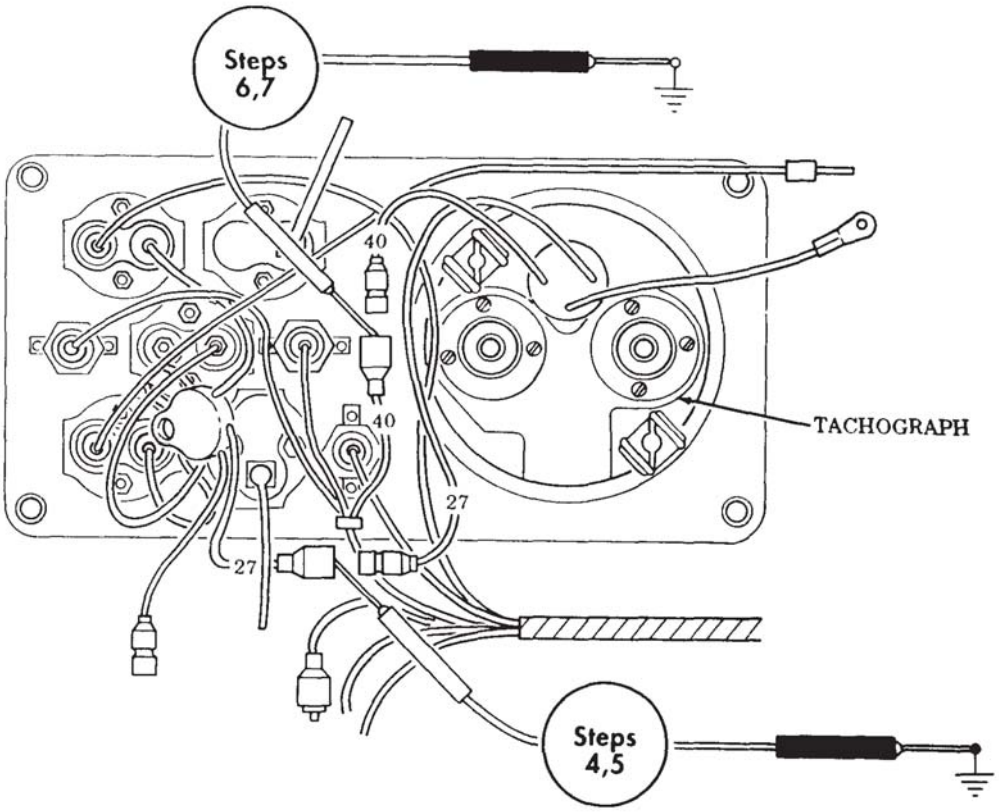

Table 2-4. Electrical Troubleshooting (Contd).

MALFUNCTION TEST OR INSPECTION CORRECTIVE ACTION

Step 9. Open tachograph.
Step 10. Increase engine speed to 2400 rpm and maintain.
Step 11. Touch positive lead of multimeter to contact end of lead 27 at red lamp.
Step 12. Touch negative lead of multimeter to frame ground. Voltage should be present and lamp should light.
a. If voltage is present, go to step 13.
b. Replace tachograph if voltage is not present (para. 14-49).
Step 13. Touch positive lead of multimeter to contact end of clear lamp.
Step 14. Touch negative lead of multimeter to frame ground. Voltage should be present and lamp should light.
a. If voltage is present, go to step 15.
b. Replace tachograph if voltage is not present (para. 14-49).
Step 15. Remove two lamps (para. 14-49).
Step 16. Set multimeter to RX1 scale.
Step 17. Touch positive lead of multimeter to contact end of red lamp.
Step 18. Touch negative lead of multimeter to contact end at side of lamp. Continuity should be present.
a. Adjust engine rpm warning contact if continuity is present (para. 14-49).
b. Replace lamps if continuity is not present (para. 14-49).
Step 19. Touch positive lead of multimeter to contact end of clear lamp.
Step 20. Touch negative lead of multimeter to contact end at side of lamp. Continuity should be present.
a. Adjust engine rpm warning contact if continuity is present (para. 14-49).
b. Replace lamps if continuity is not present (para. 14-49).

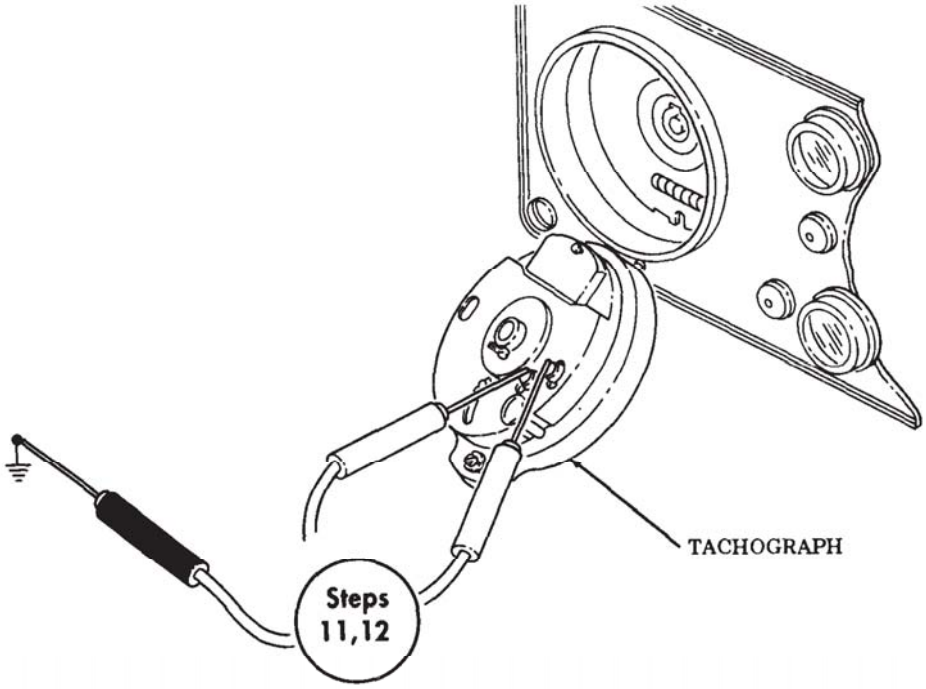

END OF TESTING!

Table 2-4. Electrical Troubleshooting (Contd).

MALFUNCTION TEST OR INSPECTION CORRECTIVE ACTION

34. LOW AIR PRESSURE WARNING SYSTEM INOPERATIVE

Test 1. Test input voltage to buzzer.

Step 1. Turn battery switch and ignition switch to OFF position.

Step 2. Disconnect lead 85 from buzzer.

Step 3. Drain air pressure from air tanks to less than 54 psi (372 kPa) (TM 9-2320-260-10). Close drain valve.

Step 4. Set multimeter to a voltage range that will measure 24 volts.

Step 5. Turn battery switch to ON position.

Step 6. Turn ignition switch to RUN position.

Step 7. Touch negative lead of multimeter to frame ground. Voltage should be present.

Step 8. Touch positive lead of multimeter to contact end of lead 85.

a. Replace buzzer if voltage is present (para. 4-23).

b. If voltage is not present, go to test 2.

Test 2. Test input voltage to warning light.

Step 1. Disconnect lead 85 from warning light.

Step 2. Drain air pressure from air tanks to less than 54 psi (372 kPa) (TM 9-2320-260-10) Close drain valve.

Step 3. Set multimeter to a range that will measure 24 volts.

Step 4. Turn battery switch to ON position.

Step 5. Turn ignition switch to RUN position.

Step 6. Touch positive lead of multimeter to contact end of lead 85.

Step 7. Touch negative lead of multimeter to frame ground. Voltage should be present.

a. Replace warning lamp if voltage is present (para. 4-15).

b. If voltage is not present, go to test 3.

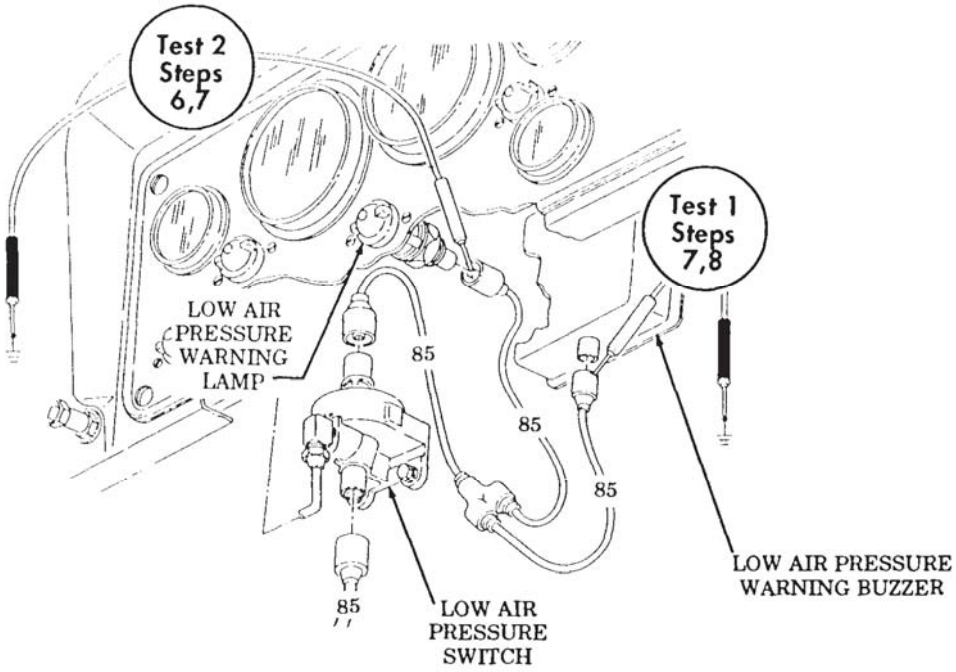

Table 2-4. Electrical Troubleshooting (Contd).

MALFUNCTION TEST OR INSPECTION CORRECTIVE ACTION

Test 3. Test low air pressure switch voltage output.

Step 1. Ensure air pressure is below 65 psi (448 kPa).
Step 2. Disconnect lead 85 from pin B of low air switch.
Step 3. Turn battery switch and ignition switch to ON position.
Step 4. Touch negative lead of multimeter to frame ground.
Step 5. Touch positive lead of multimeter to pin B of low air switch. Voltage should be present.
a. If voltage is not present, go to test 4.
b. If voltage is present, go to step 6.
Step 6. Disconnect lead 85 from low air pressure buzzer.
Step 7. Set multimeter to RX1 scale.
Step 8. Touch positive lead of multimeter to contact end of lead 85 at low air pressure switch.
Step 9. Touch negative lead of multimeter to contact end of lead 85 at low air pressure buzzer. Continuity should be present.
a. If continuity is present, go to test 4.
b. Repair or replace lead if continuity is not present (para. 4-52).

Test 4. Test voltage into low air switch.

Step 1. Disconnect lead 85 at pin A of low air pressure switch.
Step 2. Set multimeter to a voltage range that will measure 24 volts.
Step 3. Turn battery switch to ON position.
Step 4. Turn ignition switch to RUN position.
Step 5. Ensure air pressure is below 65 psi (448 kPa).
Step 6. Touch negative lead of multimeter to frame ground.
Step 7. Touch positive lead of multimeter to contact end of lead 85.
a. If voltage is not present, repair or replace lead 85 (para. 4-52).
b. Replace low air pressure switch if voltage is present (para. 4-26).

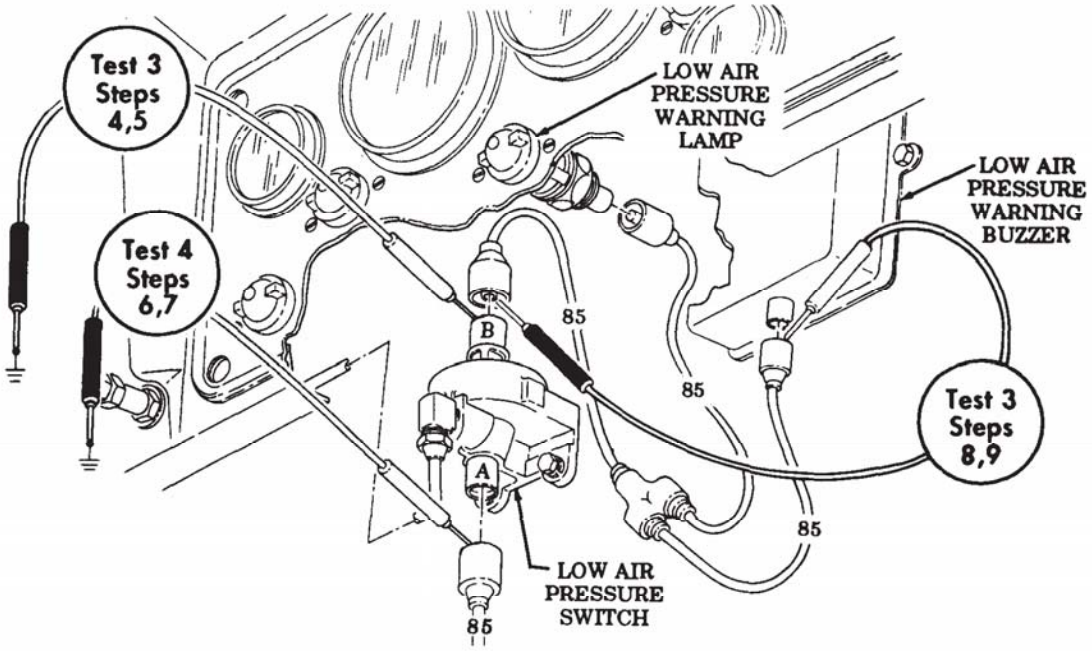

END OF TESTING!

Table 2-4. Electrical Troubleshooting (Contd).

MALFUNCTION TEST OR INSPECTION CORRECTIVE ACTION

35. HORN DOES NOT OPERATE

NOTE

Electrical troubleshooting of the electric horn and air horn is the same.

Test 1. Test input voltage to horn circuit breaker.

Step 1. Turn battery switch to ON position and ignition switch to RUN position.

Step 2. Remove lead 25 from horn circuit breaker.

Step 3. Set multimeter to a voltage range that will measure 24 volts.

Step 4. Touch negative lead of multimeter to frame ground.

Step 5. Touch positive lead of multimeter to horn circuit breaker contact.

a. Replace horn circuit breaker if voltage is not present (para. 4-20).

b. If voltage is present, go to test 2.

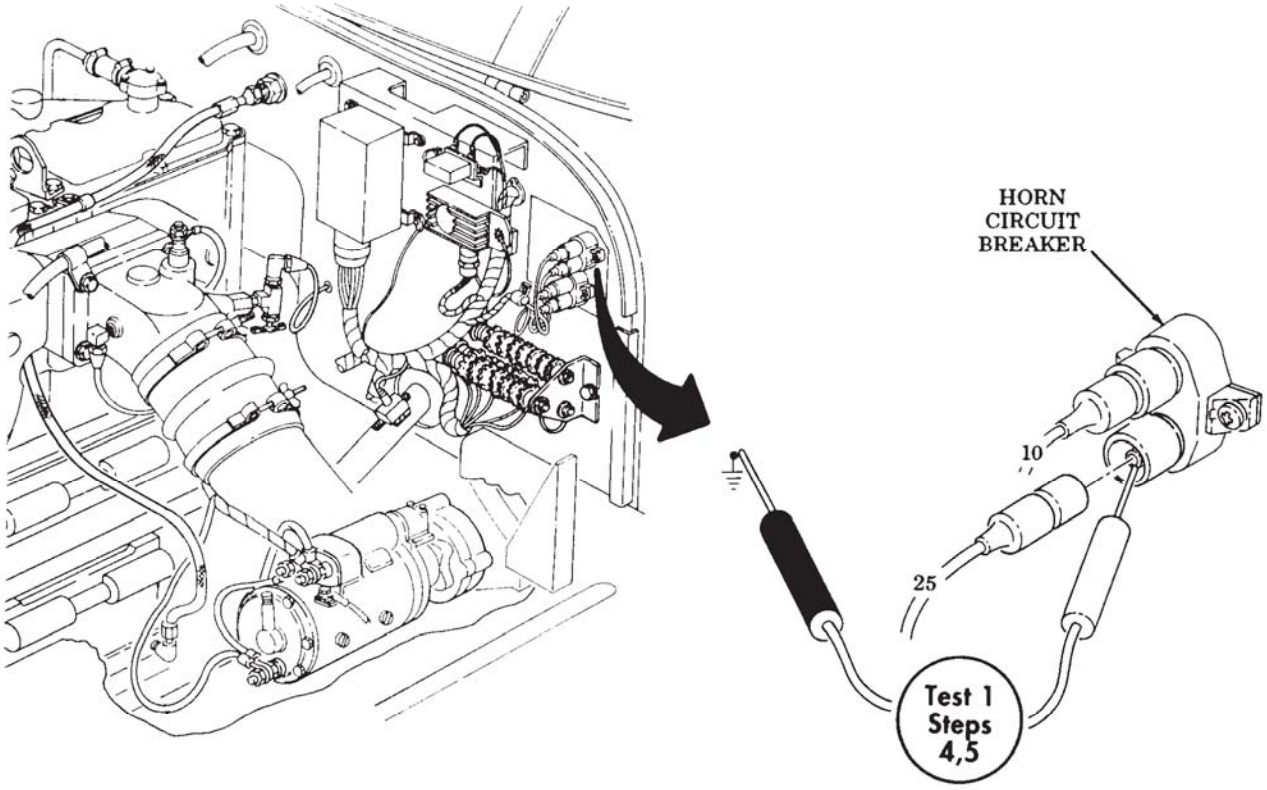

Table 2-4. Electrical Troubleshooting (Contd).

MALFUNCTION TEST OR INSPECTION CORRECTIVE ACTION

Test 2. Test air horn solenoid voltage.

Step 1. Remove lead 25 from pin B of air horn solenoid.

Step 2. Touch negative lead of multimeter to frame ground.

Step 3. Touch positive lead of multimeter to pin B of solenoid.

a. If voltage is present, go to test 3.

b. If voltage is not present, go to step 4.

Step 4. Remove lead 25 connected to pin A of air solenoid.

Step 5. Touch negative lead of multimeter to frame ground.

Step 6. Touch positive lead of multimeter to contact end of lead 25.

a. Replace air horn solenoid if voltage is present (para. 4-30).

b. If voltage is not present, repair or replace lead 25 (para. 4-52).

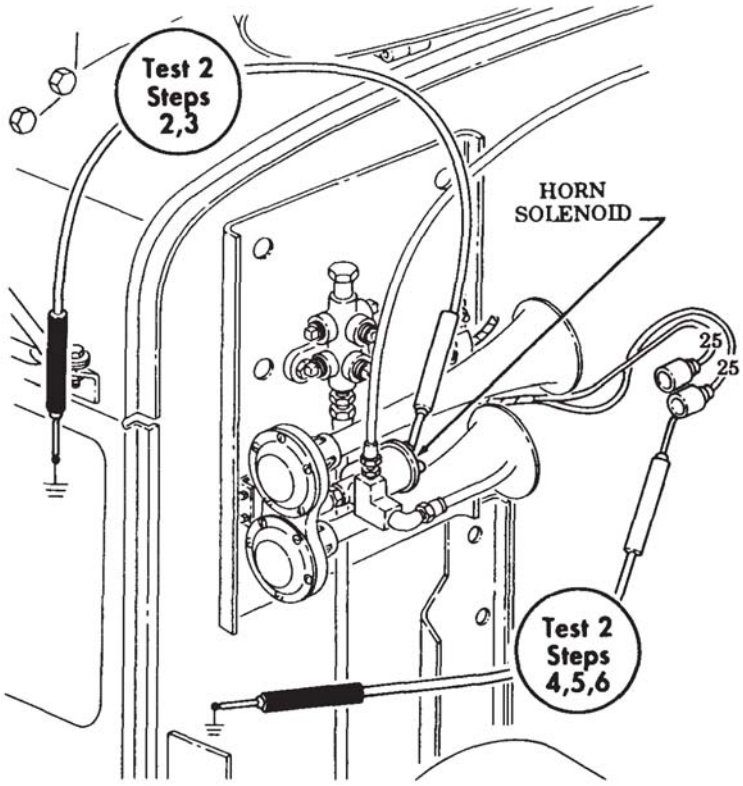

Test 3. Test horn switch input voltage.

Step 1. Remove horn switch (para. 4-29) until lead 25 can be seen.

Step 2. Set multimeter to a voltage range that will measure 24 volts.

Step 3. Touch negative lead of multimeter to frame ground.

Step 4. Touch positive lead of multimeter to lead 25 contact end.

a. Repair or replace lead 25 if voltage is not present (para. 4-52).

b. If voltage is present, go to test 4.

Table 2-4. Electrical Troubleshooting (Contd).

MALFUNCTION TEST OR INSPECTION CORRECTIVE ACTION

Test 4. Test horn switch continuity.

Step 1. Disconnect lead 25 from air horn solenoid to protect multimeter.

Step 2. Reinstall horn switch cap (para. 4-29).

Step 3. Set multimeter to RX1 scale.

Step 4. Touch negative lead of multimeter to frame ground.

Step 5. Touch positive lead of multimeter to lead 25 and press down until contact touches base plate.

a. If continuity is present, connect lead 25 and check horn operation.

b. Remove horn switch and clean or replace horn switch if continuity is not present (para. 4-29).

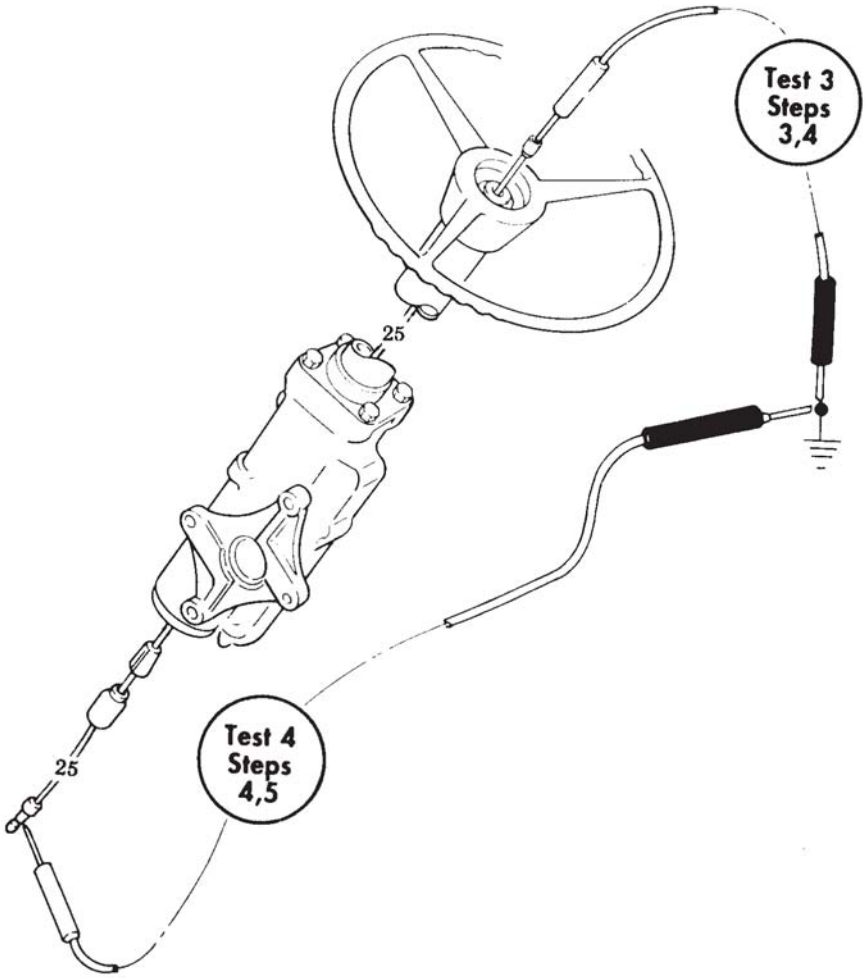

END OF TESTING!

Table 2-4. Electrical Troubleshooting (Contd).

MALFUNCTION TEST OR INSPECTION CORRECTIVE ACTION

HEATING SYSTEM

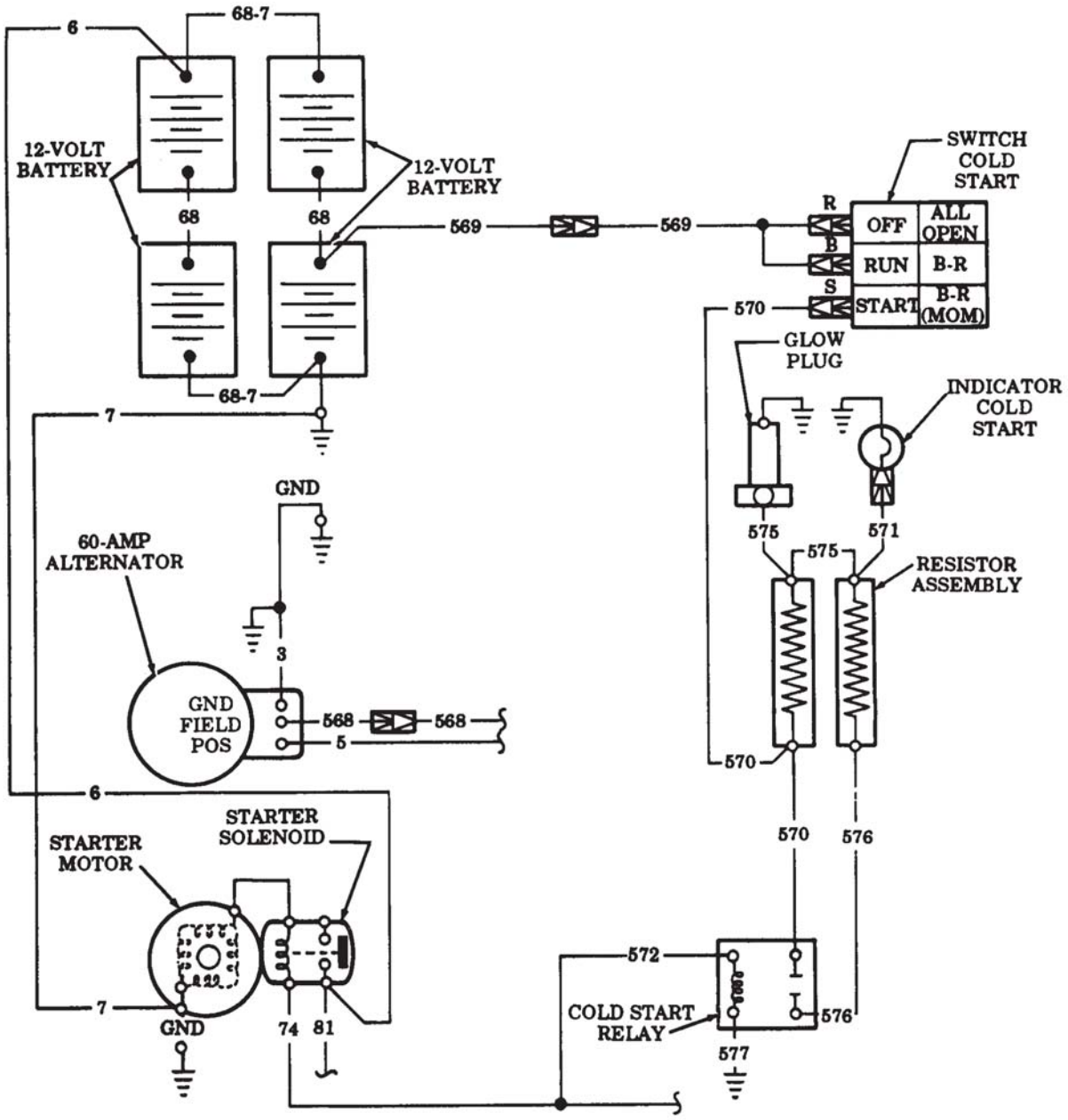

36. COLD START SYSTEM FAILS TO PREHEAT

Step 1. Check batteries and cables.

Perform tests in malfunction 1.

Table 2-4. Electrical Troubleshooting (Contd).

MALFUNCTION TEST OR INSPECTION CORRECTIVE ACTION

Test 1. Test continuity of glow plug.

Step 1. Remove glow plug (para. 3-30).

Step 2. Set multimeter to RX1 scale.

Step 3. Touch positive lead of multimeter to contact end of glow plug.

Step 4. Touch negative lead of multimeter to other contact end of glow plug. Continuity should be present.

a. If continuity is present, go to test 2.

b. Replace glow plug if continuity is not present (para. 3-30).

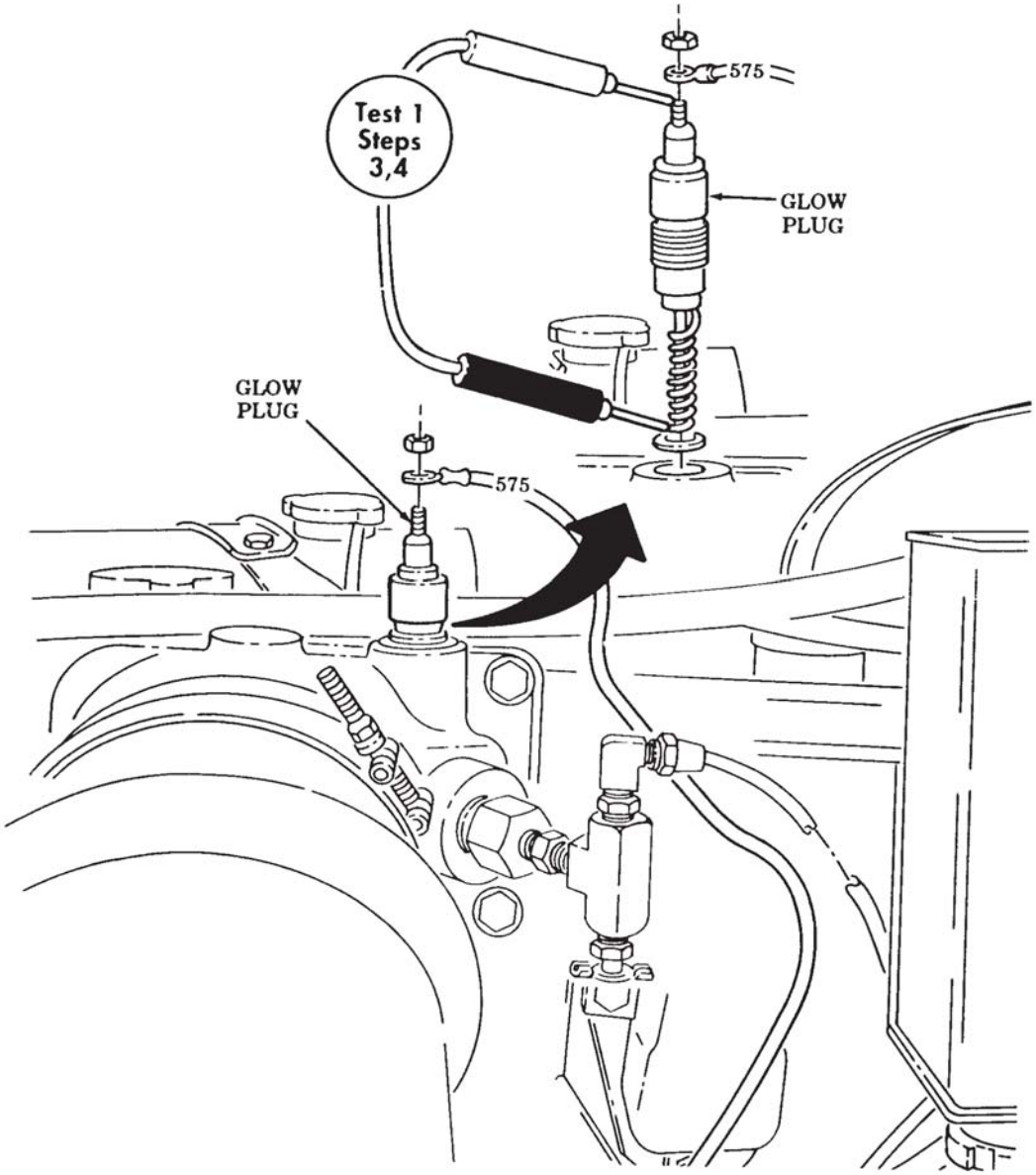

Table 2-4. Electrical Troubleshooting (Contd).

MALFUNCTION TEST OR INSPECTION CORRECTIVE ACTION

Test 2. Test cold start switch for voltage.

Step 1. Set multimeter to a range that will measure 24 volts.

Step 2. Disconnect leads 569 (pins R and B) and 570 (pin S) from cold start switch.

Step 3. Touch positive lead of multimeter to contact end of lead 569.

Step 4. Touch negative lead of multimeter to frame ground. Voltage should be present.

a. If voltage is present, go to step 5.

b. Repair or replace lead 569 if voltage is not present (para. 4-52).

Step 5. Install lead 569 into cold start switch.

Step 6. Touch positive lead of multimeter to contact end of pins at cold start switch.

Step 7. Touch negative lead of multimeter to frame ground. Voltage should be present.

a. If voltage is present, go to test 3.

b. Replace cold start switch if voltage is not present (para. 4-17).

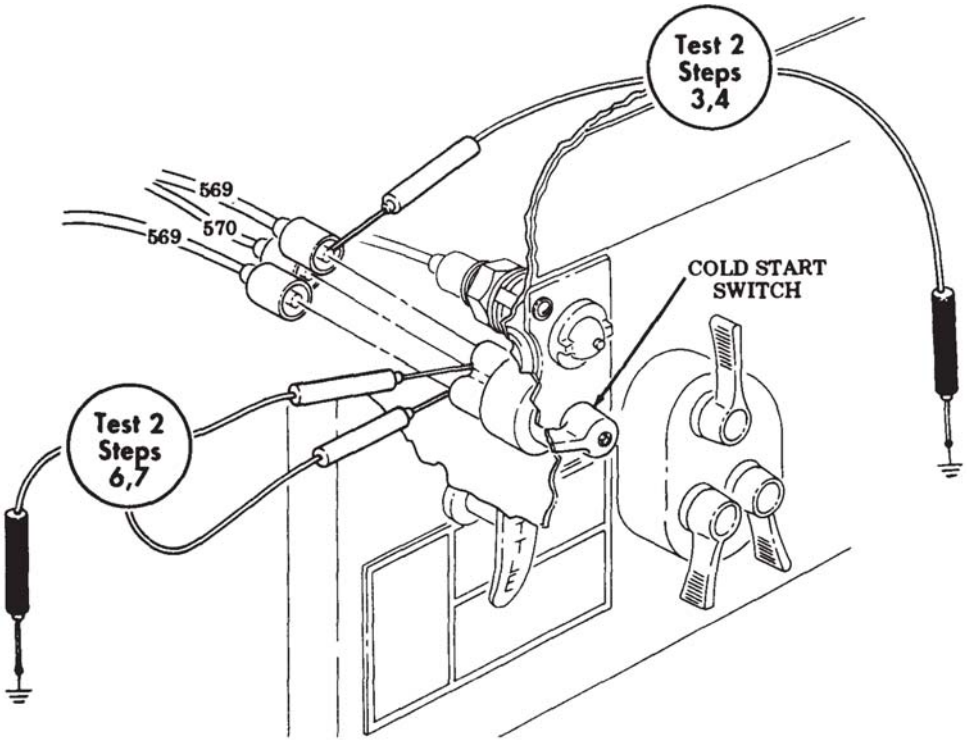

Test 3. Test continuity of leads and resistor.

Step 1. Disconnect lead 575 from glow plug.

Step 2. Set multimeter to RX1 scale.

Step 3. Touch positive lead of multimeter to contact end of lead 575 at glow plug.

Step 4. Touch negative lead of multimeter to lead 575 at resistor. Continuity be present.

a. If continuity is present, go to step 5.

b. Repair or replace lead 575 if continuity is not present (para. 4-52).

Step 5. Disconnect lead 571 from cold start indicator lamp.

Step 6. Touch positive lead of multimeter to contact end of lead 571 at indicator lamp.

Table 2-4. Electrical Troubleshooting (Contd).

MALFUNCTION TEST OR INSPECTION CORRECTIVE ACTION

Step 7. Touch negative lead of multimeter to lead 571 at resistor. Continuity should be present.
a. If continuity is present, go to step 8.
b. Repair or replace lead 571 if continuity is not present (para. 4-52).

Step 8. Disconnect lead 576 at cold start relay.

Step 9. Touch positive lead of multimeter to contact end of lead 576 at relay.

Step 10. Touch negative lead of multimeter to lead 576 at resistor. Continuity should be present.
a. If continuity is present, go to test 4.
b. Repair or replace lead 576 if continuity is not present (para. 4-52).

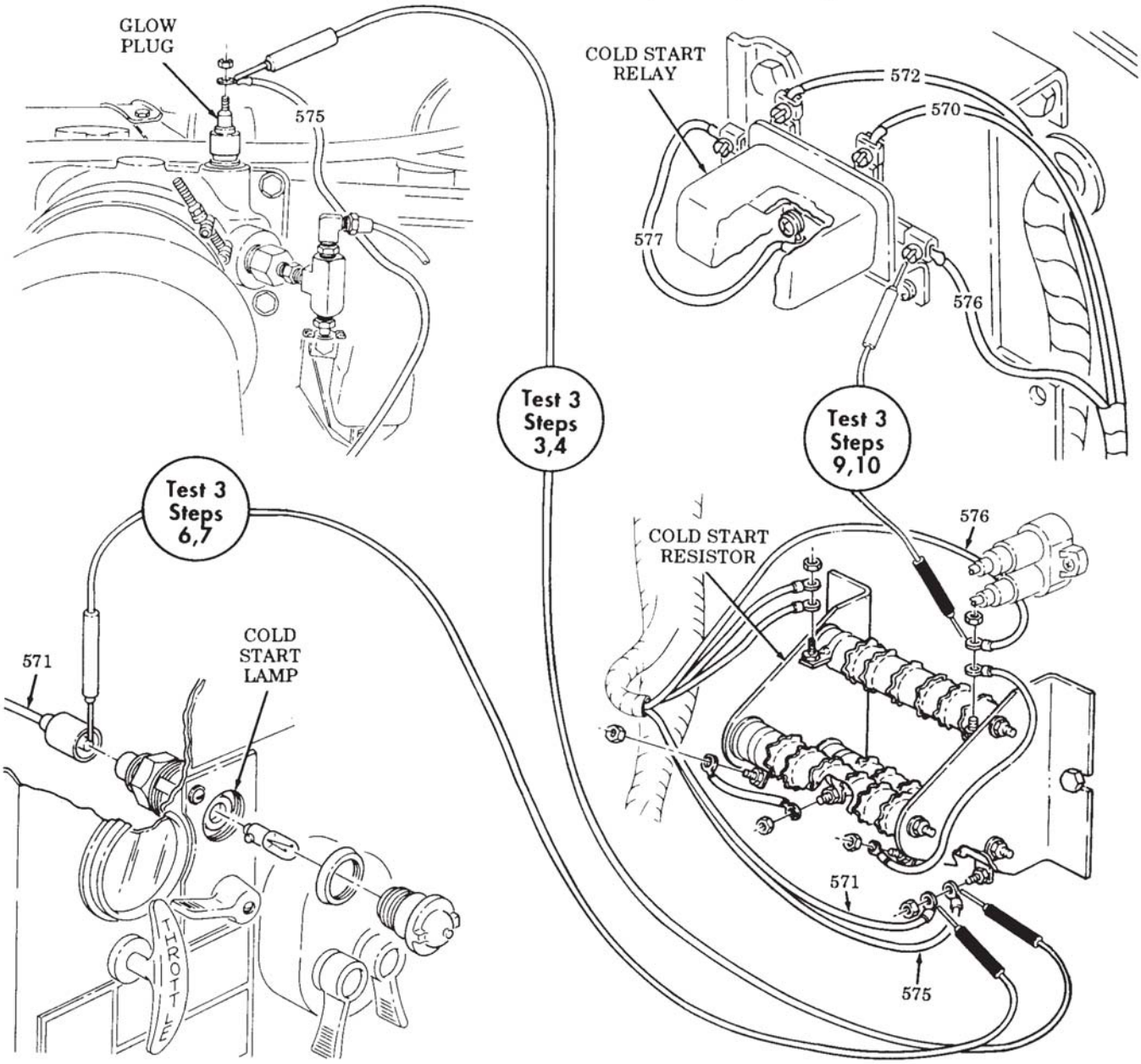

Table 2-4. Electrical Troubleshooting (Contd).

MALFUNCTION TEST OR INSPECTION CORRECTIVE ACTION

Test 4. Test continuity of resistor.

Step 1. Set multimeter to RX1 scale.

Step 2. Touch positive lead of multimeter to connector for lead 575.

Step 3. Touch negative lead of multimeter to connector for lead 570. There should be 0.2 ohms present.

a. If resistance is present, go to step 4.

b. If resistance is not present, replace resistor (para. 3-33).

Step 4. Touch positive lead of multimeter to connector for lead 575.

Step 5. Touch negative lead of multimeter to connector for lead 576. There should be 0.2 ohms present.

a. If resistance is present, go to step 6.

b. Replace resistor if resistance is not present (para. 3-33).

Step 6. Touch positive lead of multimeter to connector for lead 575.

Step 7. Touch negative lead of multimeter to connector for lead 571. Continuity should be present.

a. If continuity is present, go to test 5.

b. Repair or replace lead 571 if continuity is not present (para. 4-52).

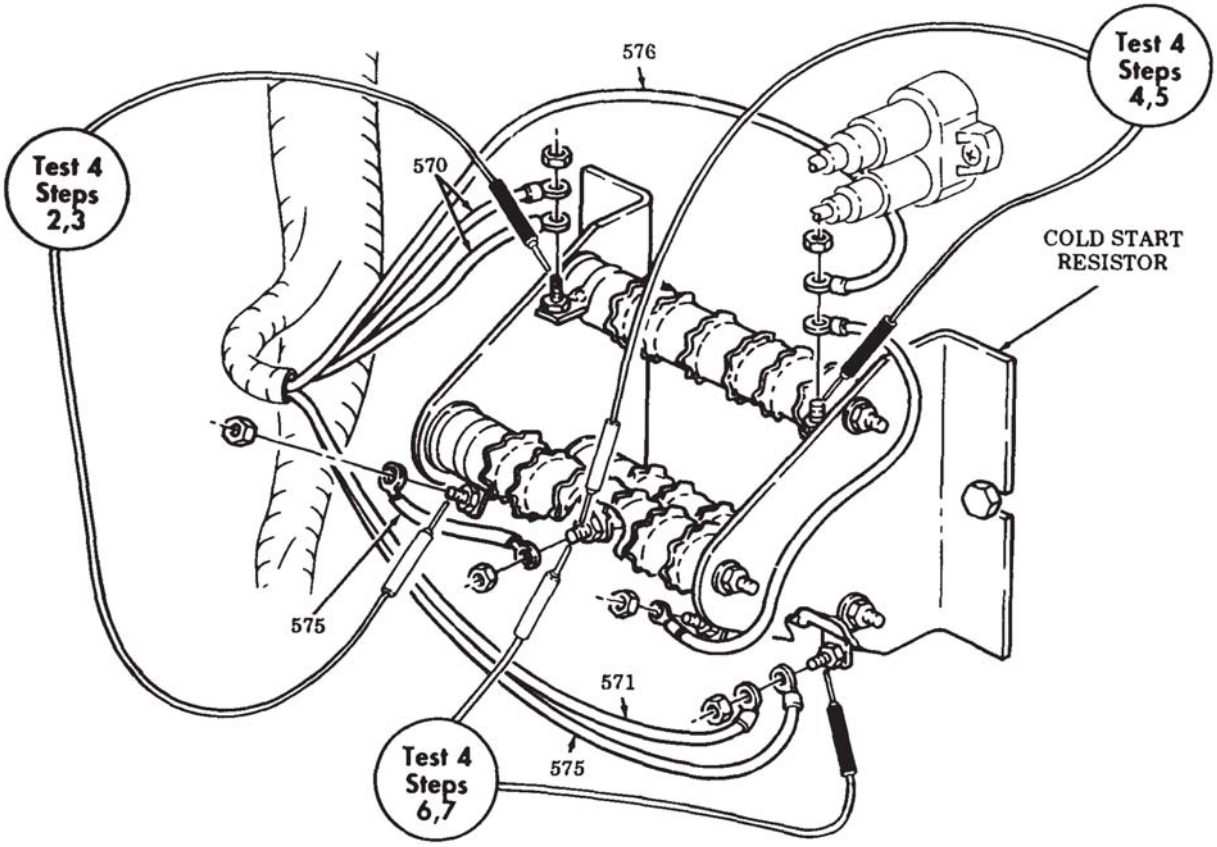

Table 2-4. Electrical Troubleshooting (Contd).

MALFUNCTION TEST OR INSPECTION CORRECTIVE ACTION

Test 5. Continuity of cold start relay.

Step 1. Set multimeter to a range that will measure 24 volts.

Step 2. Position cold start switch to ON position.

Step 3. Touch positive lead of multimeter to contact end of lead 572 at cold start relay.

Step 4. Touch negative lead of multimeter to frame ground. Voltage should be present.

Step 5. Repeat step 4 for leads 570 and 576. Voltage should be present.

Replace cold start relay if voltage is not present (para. 3-34).

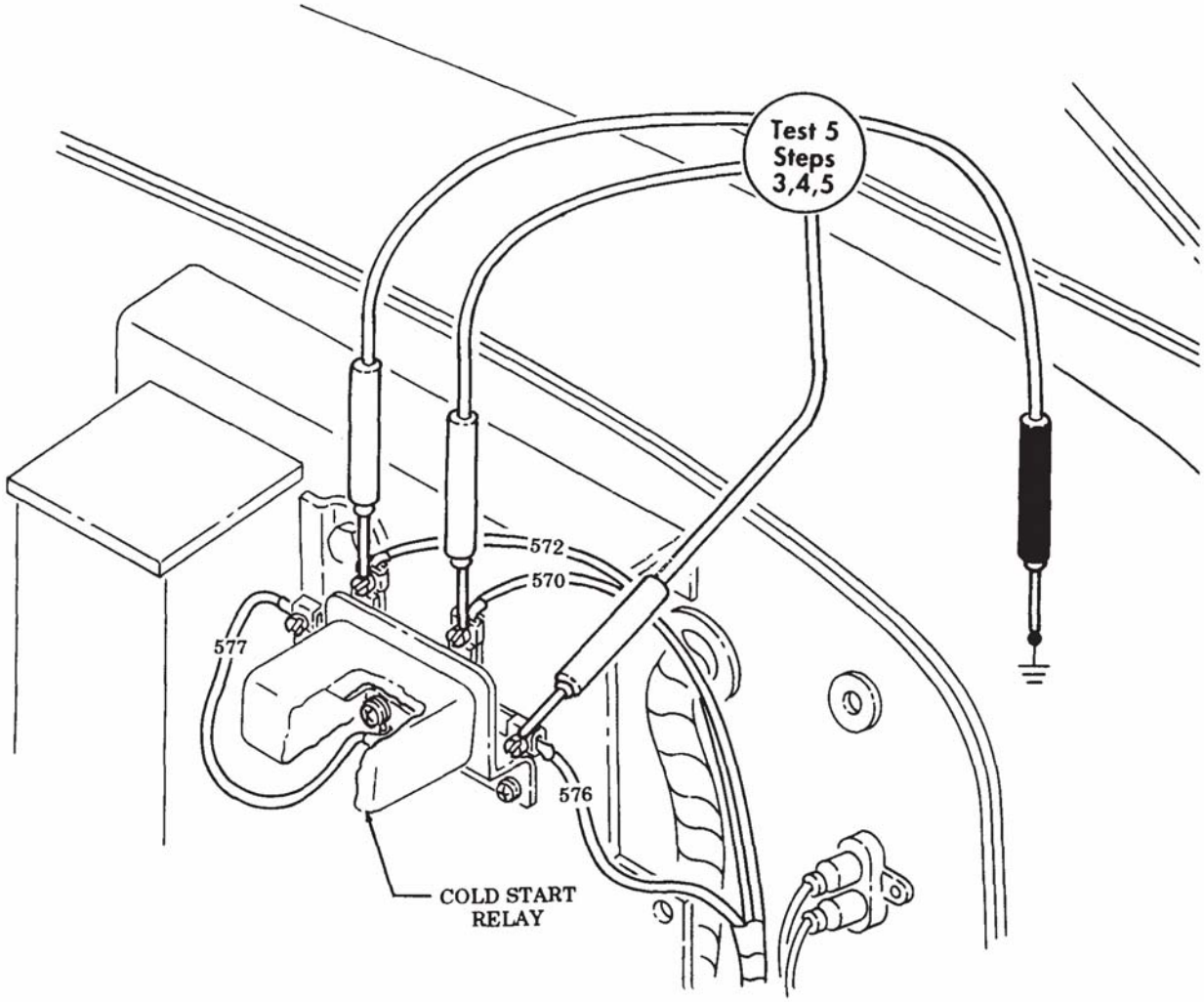

END OF TESTING!

Table 2-4. Electrical Troubleshooting (Contd).

MALFUNCTION TEST OR INSPECTION CORRECTIVE ACTION

37. HOT WATER PERSONNEL HEATER DOES NOT OPERATE OR DOES NOT OPERATE IN LOW POSITION

Test 1. Check horn operation.

Push horn button.

a. If horn fails to operate, go to malfunction 35.

b. If horn is operational, voltage is present at input of heater circuit breaker. Go to test 2.

c. If heater high/low switch operates in HIGH but fails to operate in LOW, go to test 5.

Test 2. Check heater high/low switch for power input.

Step 1. Set multimeter to a range that will measure 24 volts.

Step 2. Disconnect lead 419 at rear of heater switch.

Step 3. Touch positive lead of multimeter to contact end of lead 419 at heater switch.

Step 4. Touch negative lead of multimeter to frame ground. Voltage should be present.

a. If voltage is present, go to test 3.

b. Repair or replace lead 419 if voltage is not present (para. 4-52).

Test 3. Test for power output at heater high/low switch.

Step 1. Set multimeter to a range that will measure 24 volts.

Step 2. Disconnect lead 400 at rear of heater switch.

Step 3. Touch positive lead of multimeter to contact end of power output at the heater switch.

Step 4. Touch negative lead of multimeter to frame ground. Voltage should be present.

a. If voltage is present, go to test 4.

b. If voltage is not present, replace heater switch (para. 14-12).

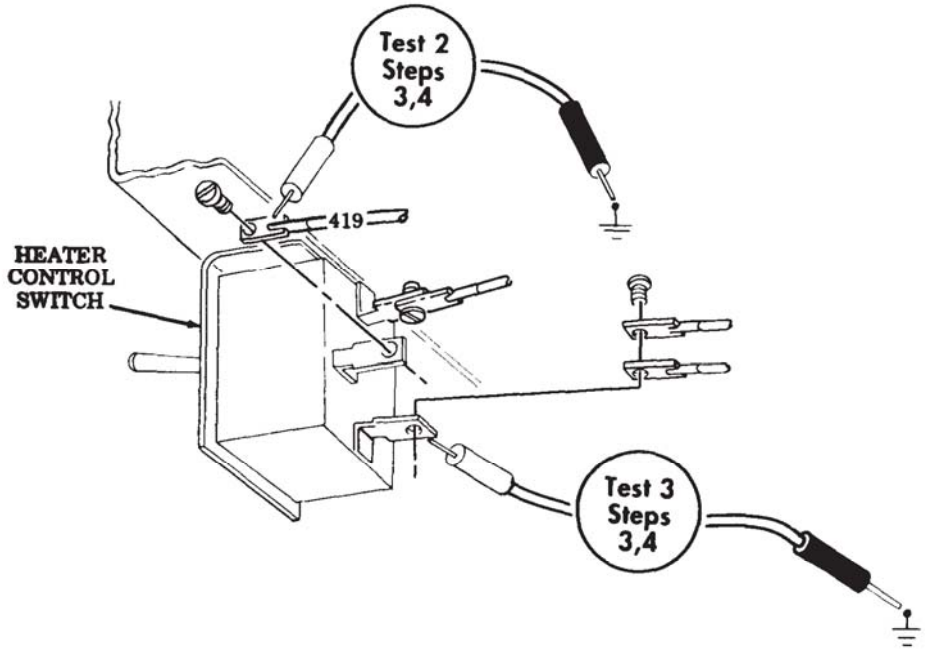

Table 2-4. Electrical Troubleshooting (Contd).

MALFUNCTION TEST OR INSPECTION CORRECTIVE ACTION

Test 4. Test personnel heater for power input.

Step 1. Ensure heater switch is in HIGH position.

Step 2. Set multimeter to a range that will measure 24 volts.

Step 3. Disconnect lead 400 from personnel heater.

Step 4. Touch positive lead of multimeter to contact end of lead 400.

Step 5. Touch negative lead of multimeter to frame ground. Voltage should be present.

a. Repair or replace lead 400 if voltage is not present (para. 4-52).

b. Replace personnel heater if voltage is present and personnel heater fails to operate (para. 14-10).

Test 5. Test blower motor resistor.

Step 1. Set multimeter to RX1 scale.

Step 2. Ensure heater switch is set to LOW position.

Step 3. Touch positive lead of multimeter to one lead on resistor.

Step 4. Touch negative lead of multimeter to the other lead on resistor.

Multimeter should measure between 4.5 and 5.5 ohms.

Redate resistor if resistance is not within tolerance of 4.5 and 5.5 ohms (para. 14-13).

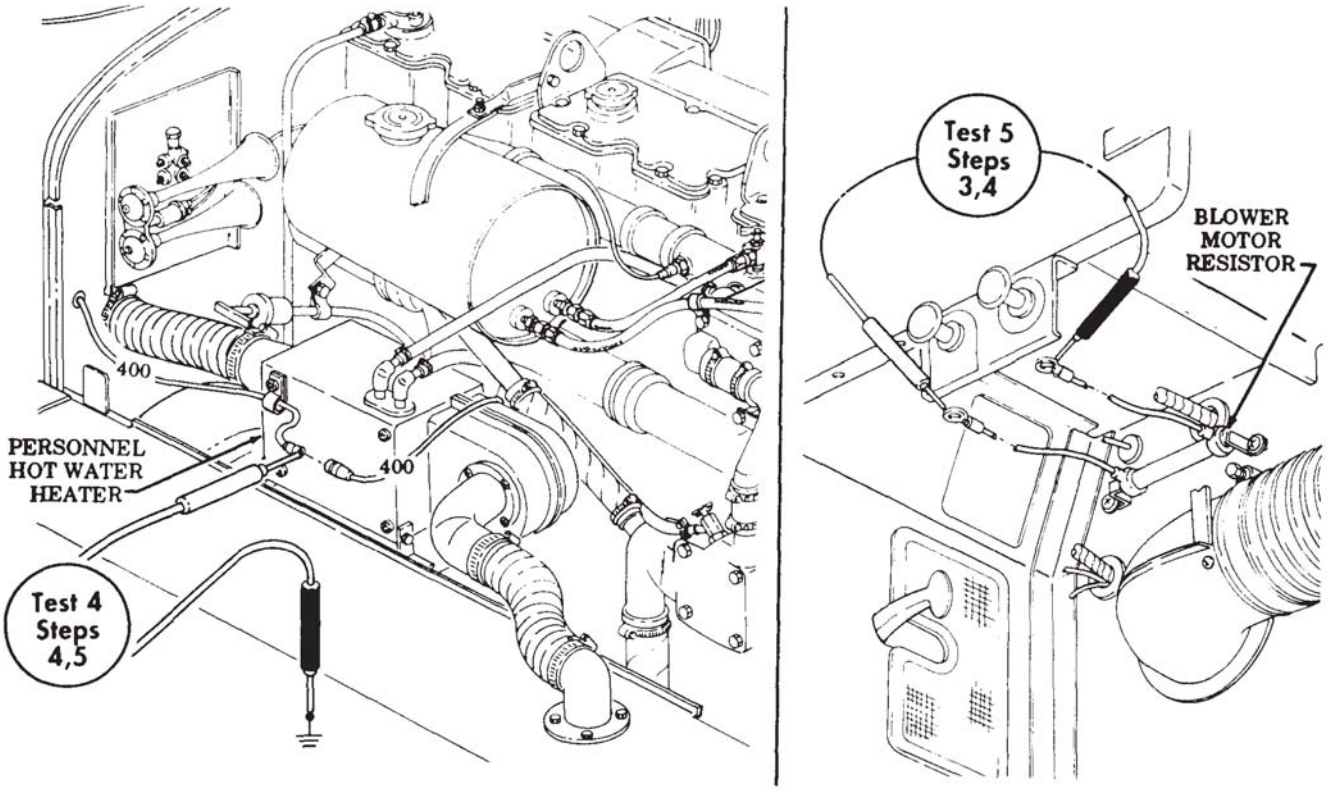

END OF TESTING!

Table 2-4. Electrical Troubleshooting (Contd).

MALFUNCTION TEST OR INSPECTION CORRECTIVE ACTION

38. PERSONNEL FUEL BURNING HEATER INOPERATIVE

Test 1. Check horn operation.

Push horn button.

a. If horn is operational, voltage is present at input of personnel heater circuit breaker. Go to test 2.

b. If horn fails to operate, go to malfunction 35.

Test 2. Test lead 400 for power input to heater control box.

Step 1. Set multimeter to a range that will measure 24 volts.

Step 2. Disconnect lead 400 from heater control box.

Step 3. Touch multimeter positive lead to contact end of lead 400.

Step 4. Touch negative lead of multimeter to frame ground. Voltage should be present.

a. If voltage is present, go to test 3.

b. Repair or replace lead 400 if voltage is not present (para. 4-52).

Test 3. Check heater control box for power output.

Step 1. Set multimeter to a range that will measure 24 volts.

Step 2. Disconnect harness connector from rear of control box.

Step 3. Set heater control switch to START position and hold.

Step 4. Set heater control heat switch to HIGH.

Step 5. Touch positive lead of multimeter to pin A.

Step 6. Touch negative lead of multimeter to frame ground.

Step 7. Repeat steps 5 and 6 for pins B, C, and D. Voltage should be present.

a. If voltage is present at all pins tested, go to test 4.

b. Replace heater control box if voltage is not present at one or more pins (para. 14-5).

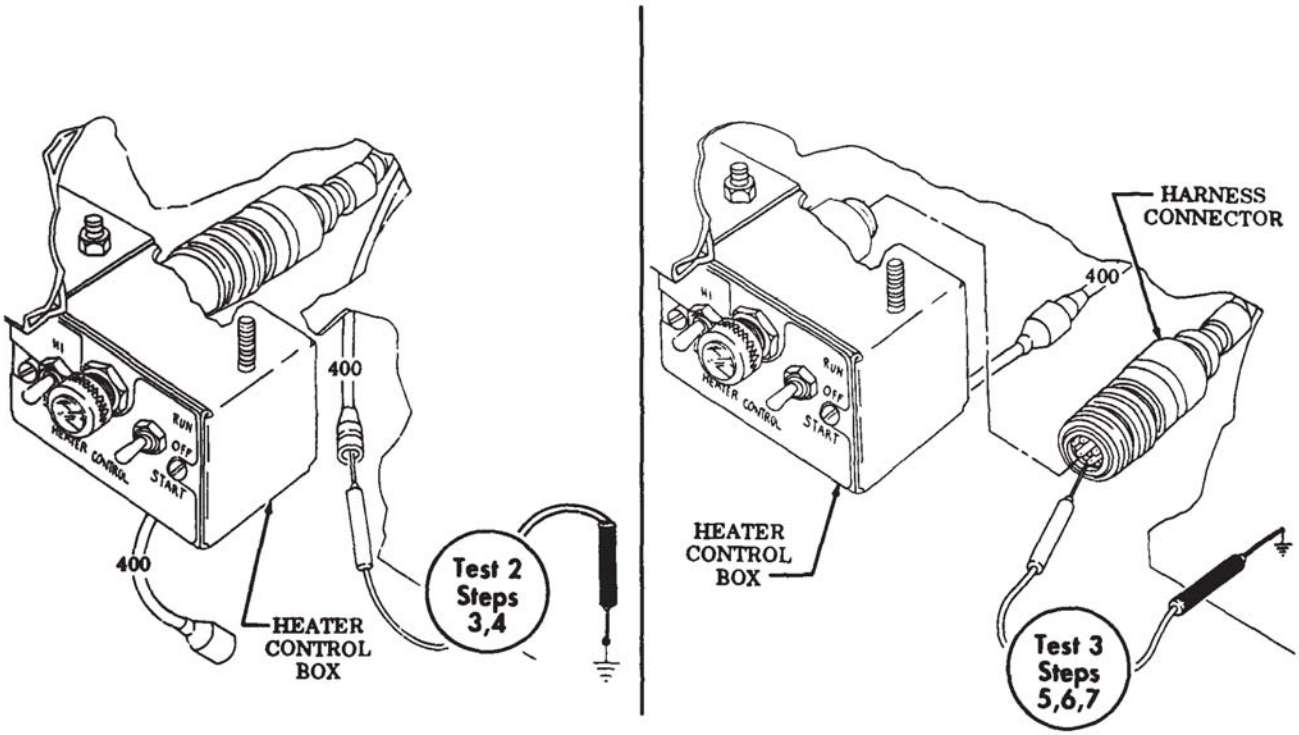

Table 2-4. Electrical Troubleshooting (Contd).

MALFUNCTION TEST OR INSPECTION CORRECTIVE ACTION

Test 4. Check for input power at fuel pump.

Step 1. Set multimeter to a range that will measure 24 volts.

Step 2. Disconnect lead 25 at fuel pump.

Step 3. Touch positive lead of multimeter to contact end of lead 25.

Step 4. Touch negative lead of multimeter to frame ground. Voltage should be present.

a. If voltage is present, go to test 5.

b. Repair or replace lead 25 if voltage is not present (para. 4-52).

Test 5. Check fuel pump for proper operation.

Refer to Mechanical Troubleshooting, table 2-2, malfunction 71.

Test 6. Check for power input at personnel heater.

Step 1. Set multimeter to a voltage that will measure 24 volts.

Step 2. Disconnect harness connector at personnel heater.

Step 3. Set heater control switch to RUN position.

Step 4. Set heater control switch to START position and hold.

Step 5. Set heater switch to HIGH position.

Step 6. Touch positive lead of multimeter to pin A of harness connector.

Step 7. Touch negative lead of multimeter to frame ground.

Step 8. Repeat steps 6 and 7 for pins B, C, and D. Voltage should be present at all pins tested.

a. Replace personnel heater if voltage is present (para. 14-2).

b. Repair or replace harness if voltage is not present at one or more pins (para. 4-52).

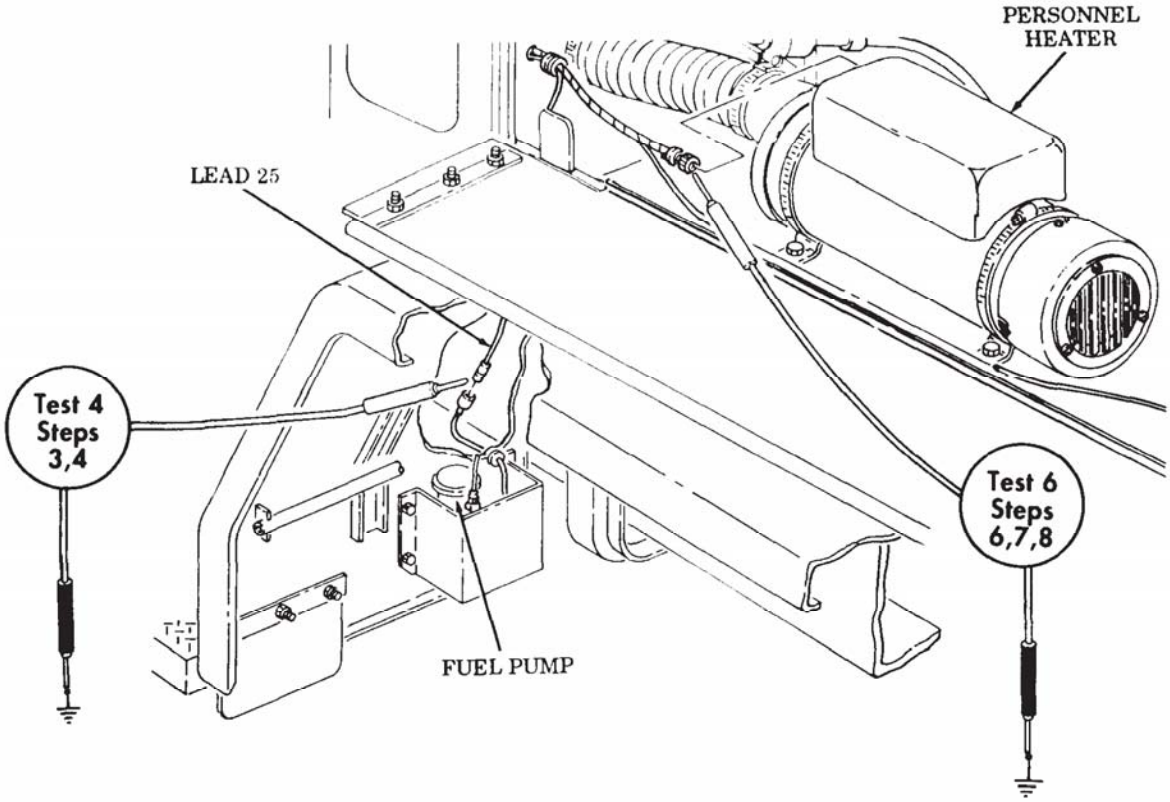

END OF TESTING!

Table 2-4. Electrical Troubleshooting (Contd).

MALFUNCTION TEST OR INSPECTION CORRECTIVE ACTION

39. HEATER CONTROL BOX LIGHT INOPERATIVE, BUT HEATER OPERATIVE

Test 1. Check for voltage at heater control box indicator lamp.

Step 1. Set multimeter to a voltage range that will measure 24 volts.

Step 2. Position heater control switch to RUN position.

Step 3. Position heater switch to HIGH position.

Step 4. Remove heater control box indicator lamp.

Step 5. Touch positive lead of multimeter to indicator lamp socket.

Step 6. Touch negative lead of multimeter to frame ground. Voltage should be present.

a. If voltage is present, replace indicator lamp.

b. If voltage is not present, go to test 2.

Test 2. Check for voltage between personnel heater and heater control box.

Step 1. Disconnect wiring harness at personnel heater.

Step 2. Connect jumper wire from pin D to pin E at harness connector.

a. Redate personnel heater if heater control box indicator lamp is lit (para 14-2).

b. Repair or replace wiring harness if indicator lamp fails to light (para. 4-52 or 14-12).

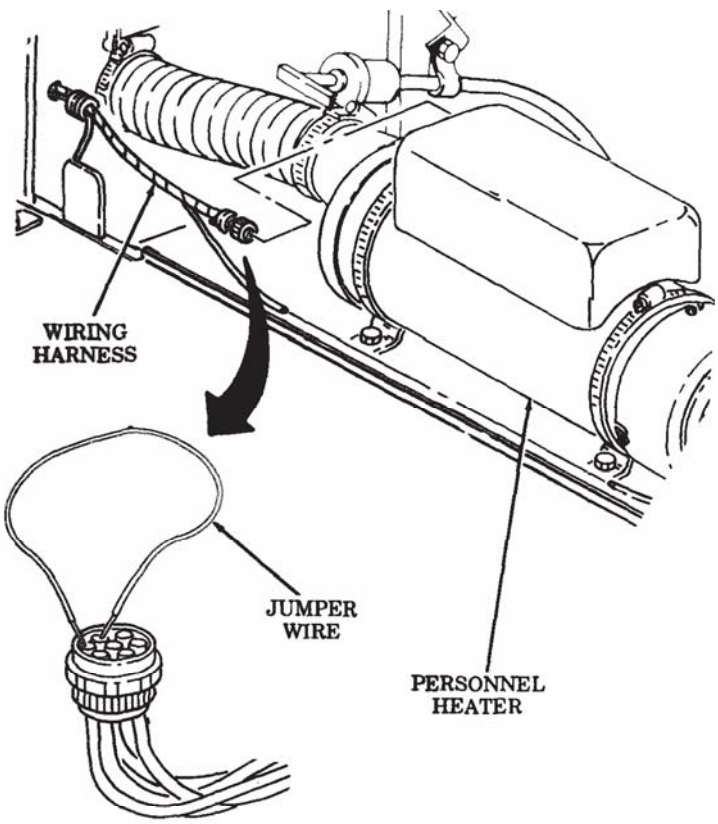

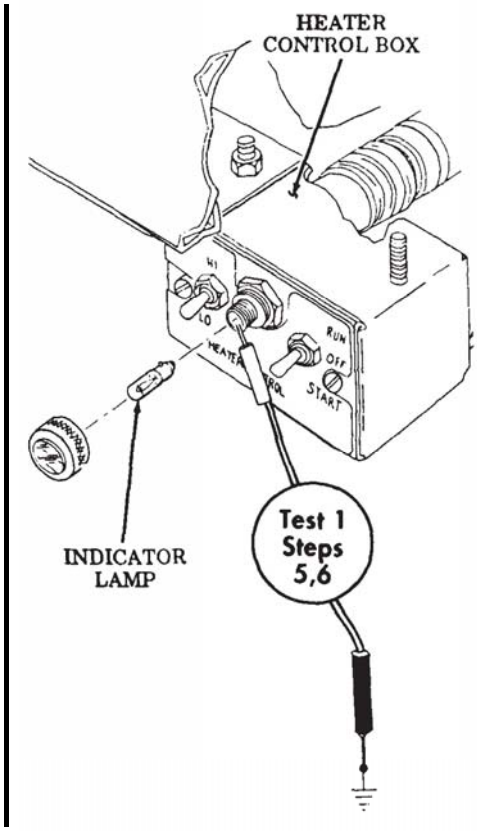

END OF TESTING!

Table 2-4. Electrical Troubleshooting (Contd).

MALFUNCTION TEST OR INSPECTION CORRECTIVE ACTION

BRAKE SYSTEM (M816, M819, M821)

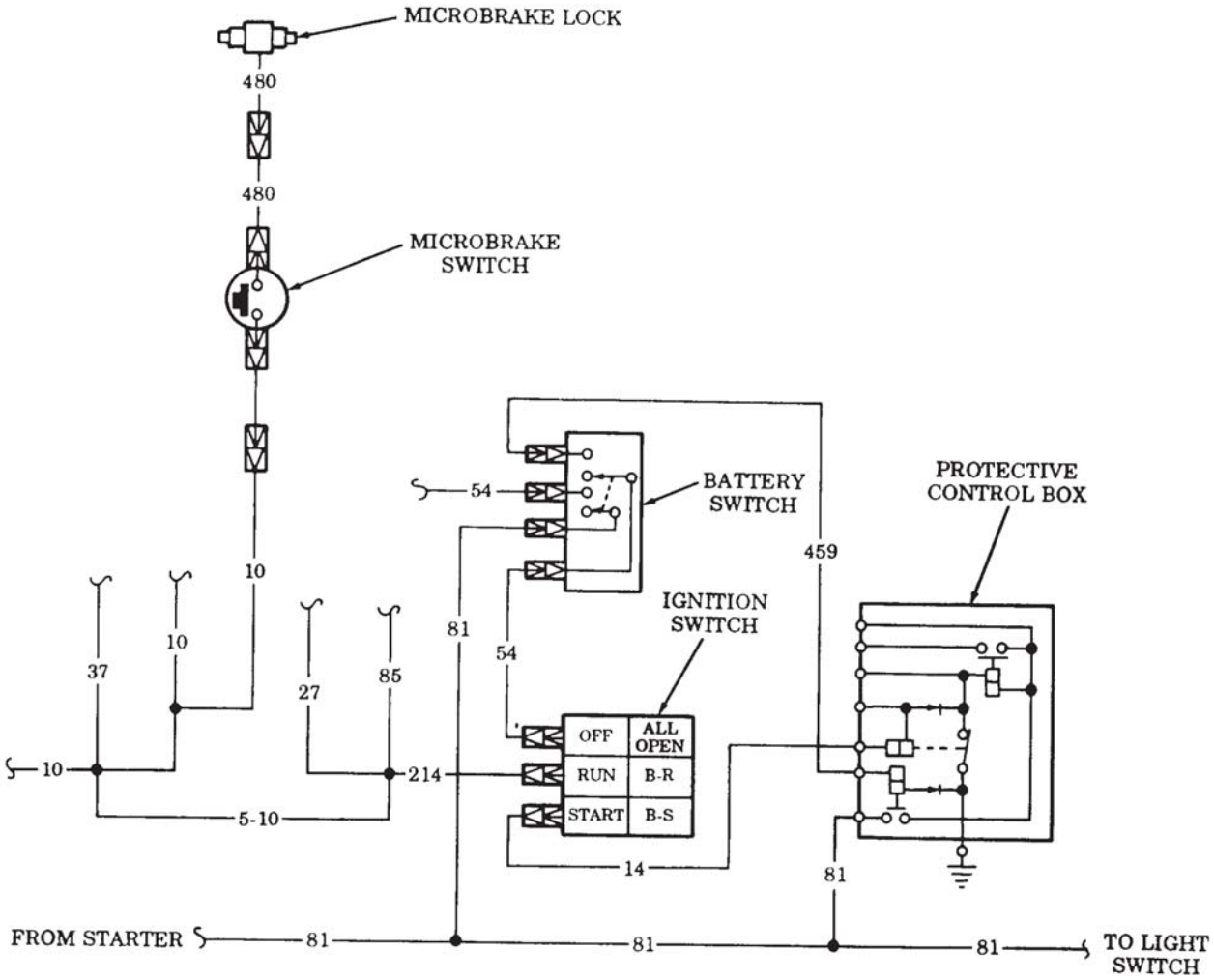

40. VEHICLE ROLLS DURING WINCHING OPERATIONS

Test 1. Test power input from battery and ignition switch.

Perform tests in malfunction 2, tests 9 and 10.

Table 2-4. Electrical Troubleshooting (Contd).

MALFUNCTION TEST OR INSPECTION CORRECTIVE ACTION

Test 2. Test voltage into microbrake switch.

Step 1. Disconnect lead 10 from microbrake switch.

Step 2. Turn battery switch to ON position.

Step 3. Turn ignition switch to RUN position.

Step 4. Set multimeter to a range that will measure 24 volts.

Step 5. Touch positive lead of multimeter to contact end of lead 10.

Step 6. Touch negative lead of multimeter to frame ground. Voltage should be present.

a. If voltage is present, go to step 7.

b. Repair or replace lead 10 if voltage is not present (para. 4-52 or 4-54).

Step 7. Install lead 10 in microbrake switch.

Step 8. Disconnect lead 480 at microbrake switch.

Step 9. Touch positive lead of multimeter to contact end of microbrake switch.

Step 10. Touch negative lead of multimeter to frame ground.

Step 11. Press microbrake switch. Voltage should be present.

a. If voltage is present, go to test 3.

b. Replace microbrake switch if voltage is not present (para. 4-21).

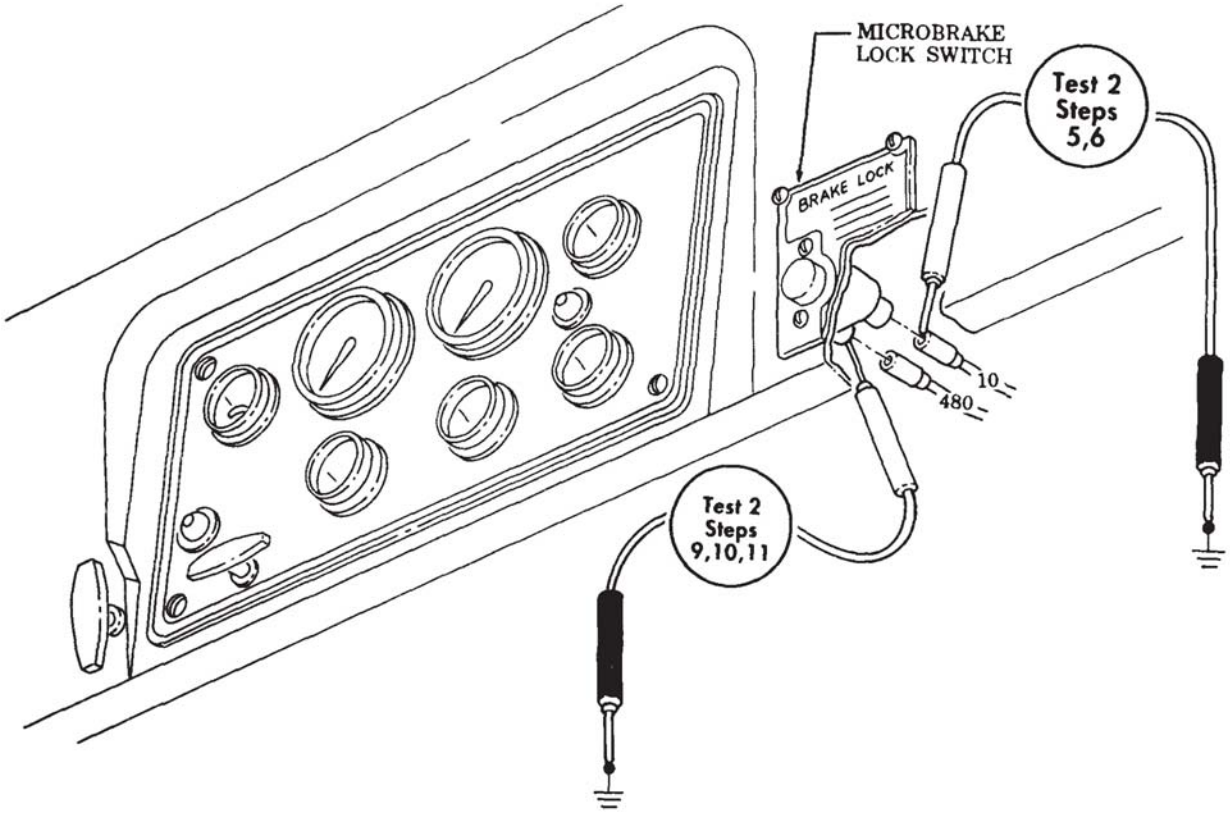

Table 2-4. Electrical Troubleshooting (Contd).

MALFUNCTION TEST OR INSPECTION CORRECTIVE ACTION

Test 3. Test voltage input into microbrake lock.

Step 1. Disconnect lead 480 from microbrake lock.

Step 2. Turn battery switch to ON position.

Step 3. Turn ignition switch to RUN position.

Step 4. Set multimeter to a range that will measure 24 volts.

Step 5. Touch positive lead of multimeter to contact end of lead 480.

Step 6. Touch negative lead of multimeter to frame ground.

Step 7. Press brake pedal. Voltage should be present.

a. Replace microbrake lock if voltage is present (para. 4-21).

b. Repair or replace lead 480 if voltage is not present (para. 4-52 or 4-54).

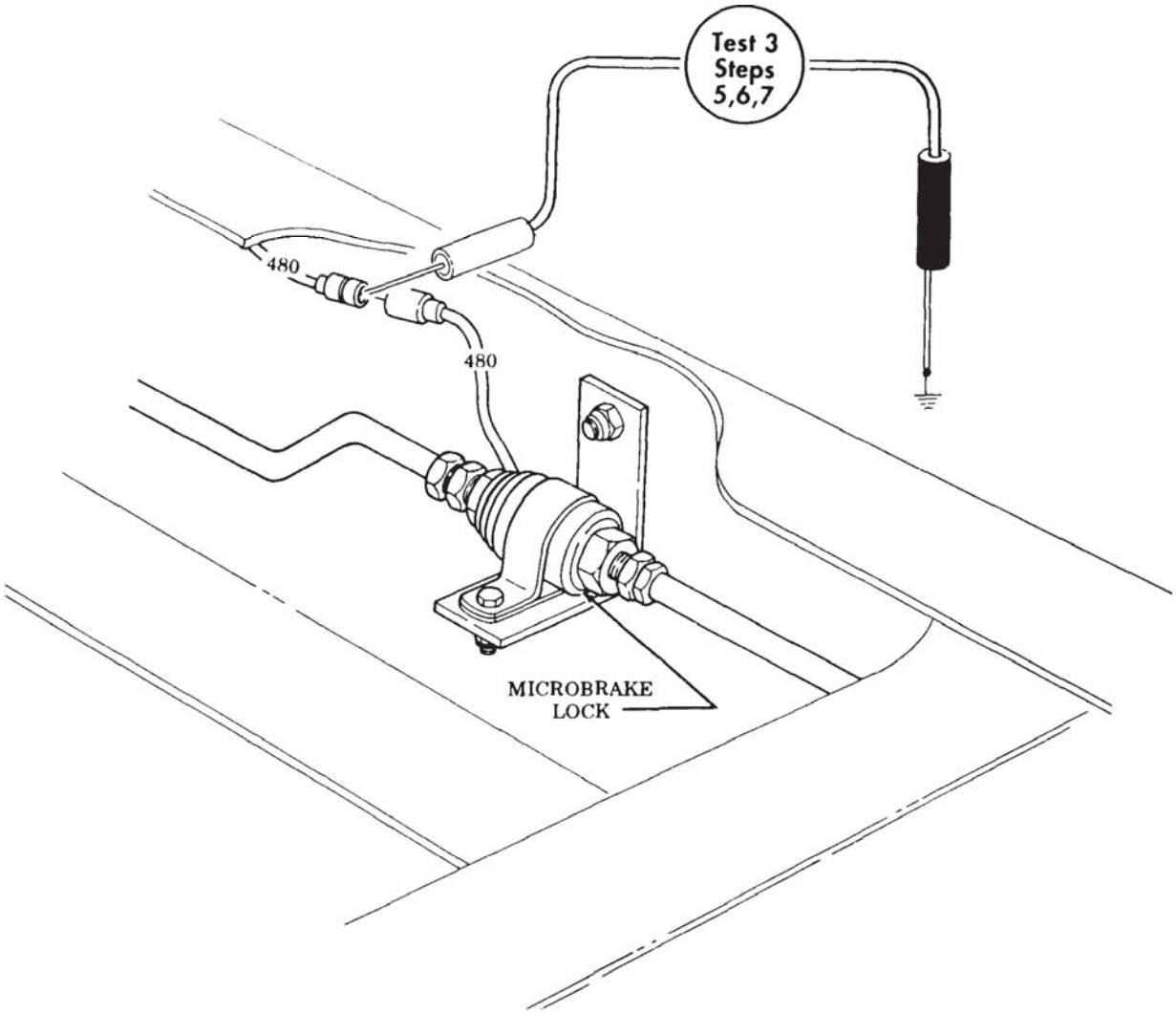

END OF TESTING!

Table 2-4. Electrical Troubleshooting (Contd).

MALFUNCTION TEST OR INSPECTION CORRECTIVE ACTION

AUXILIARY POWER SYSTEMS

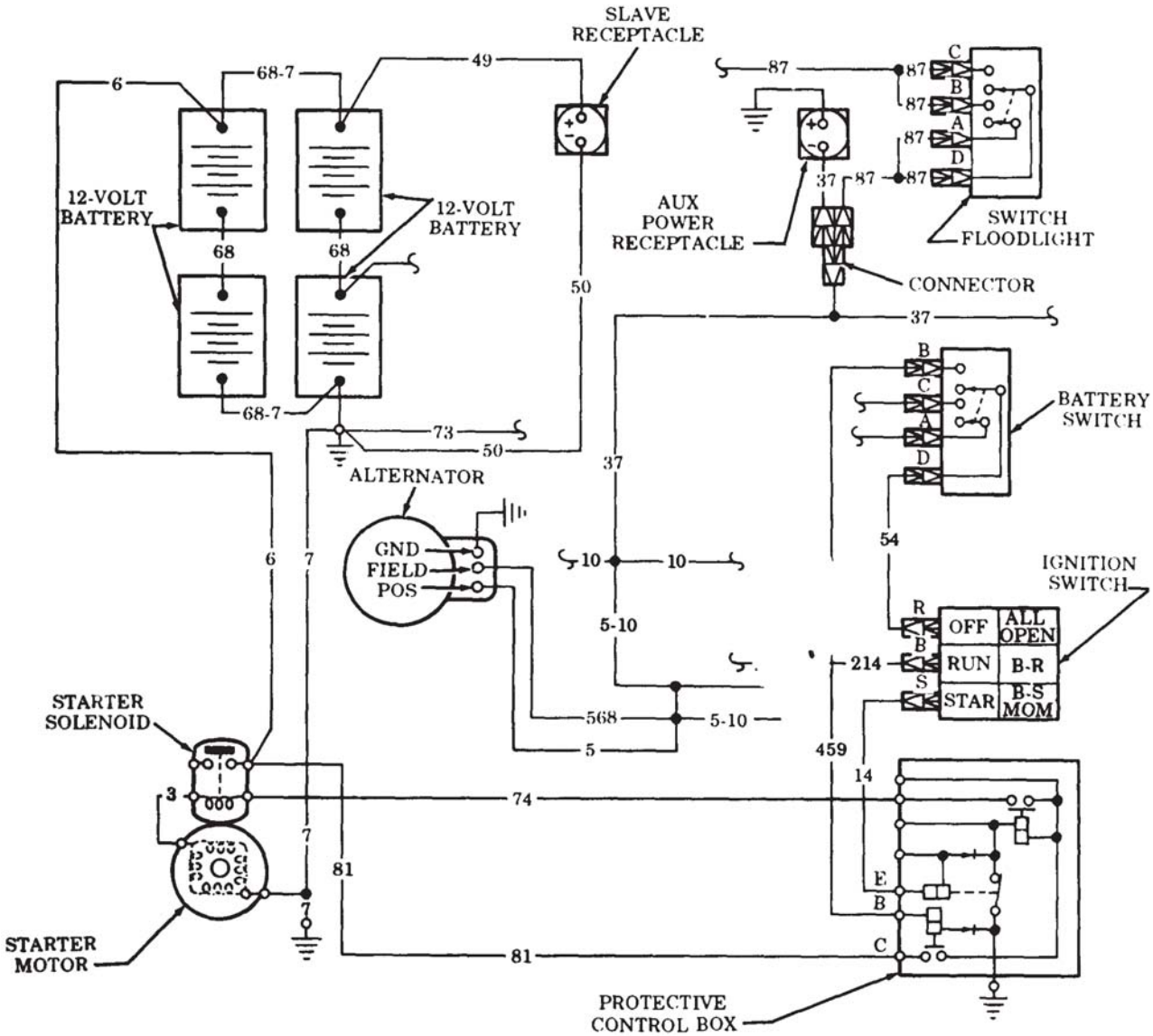

41. AUXILIARY POWER RECEPTACLE FAILS TO OPERATE (M816, M819, AND M821)

Test 1. Test battery and ignition switch for power output.

Step 1. Turn battery switch to ON position.

Step 2. Turn ignition switch to RUN position.

Step 3. Push horn button. Horn should sound.

a. If horn sounds, go to test 2.

b. If horn fails to sound, go to malfunction 35.

Table 2-4. Electrical Troubleshooting (Contd).

MALFUNCTION TEST OR INSPECTION CORRECTIVE ACTION

Test 2. Test wiring harness and circuit breakers (malfunction 27, test 7, steps 1 through 14).

Test 3. Test connector for power output.

Step 1. Turn battery switch to ON position.

Step 2. Turn ignition switch to RUN position.

Step 3. Set multimeter to a range that will measure 24 volts.

Step 4. Disconnect lead 37 from connector.

Step 5. Touch positive lead of multimeter to contact end of connector.

Step 6. Touch negative lead of multimeter to frame ground. Voltage should be present.

a. If voltage is present, go to test 4.

b. Repair or replace lead 37 if voltage is not present (para. 4-52).

Test 4. Test auxiliary power receptacle for power output.

Step 1. Set multimeter to a range that will measure 24 volts.

Step 2. Install lead 37 into power receptacle.

Step 3. Turn battery switch to ON position.

Step 4. Turn ignition switch to RUN position.

Step 5. Touch positive lead of multimeter to contact end of power receptacle.

Step 6. Touch negative lead of multimeter to frame ground. Voltage should be present.

a. If voltage is present, go to test 5.

b. Repair or replace auxiliary power receptacle if voltage is not present (para. 4-22).

Test 5. Test auxiliary power socket for continuity.

Step 1. Set multimeter to RX1 scale.

Step 2. Touch positive lead of multimeter to contact end of power socket outlet.

Step 3. Touch negative lead of multimeter to contact end of opposite positive lead. Continuity should be present.

Repair or replace auxiliary power socket if continuity is not present (para. 4-22).

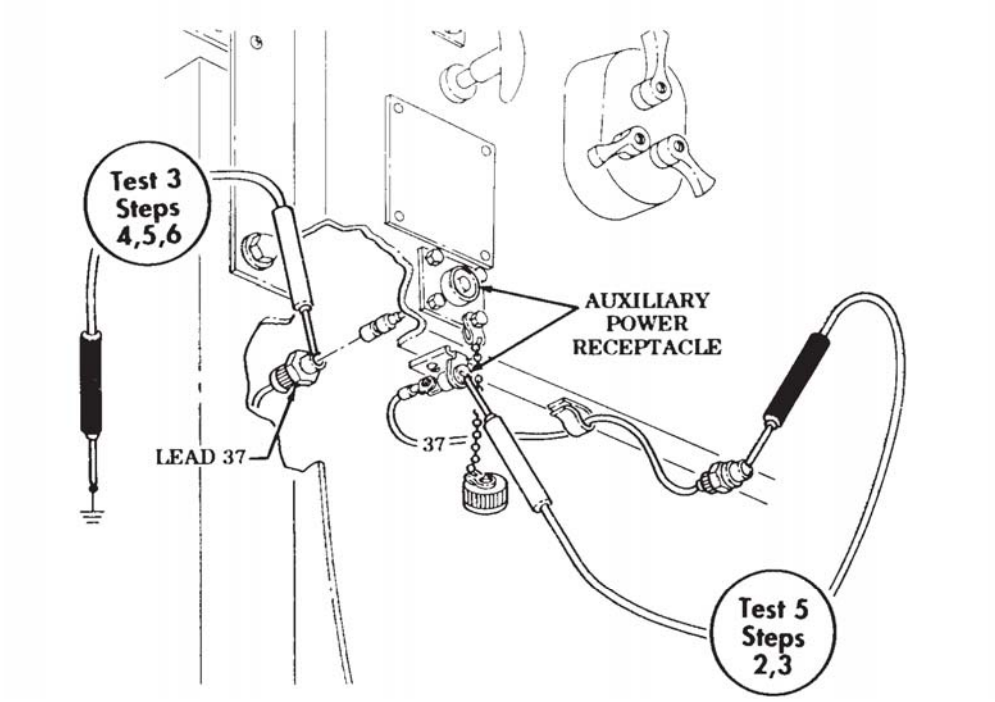

END OF TESTING!

Table 2-4. Electrical Troubleshooting (Contd).

MALFUNCTION TEST OR INSPECTION CORRECTIVE ACTION

42. VEHICLE FAILS TO JUMP START USING BATTERY SLAVE RECEPTACLE

NOTE

This malfunction can be performed for vehicles equipped with or without engine coolant heater kit. This malfunction covers vehicles equipped with engine coolant heater kit.

Test 1. Check condition of batteries (malfunction 1, tests 1 and 2).

Test 2. Check voltage output at battery slave receptacle.

Step 1. Open battery slave receptacle.

Step 2. Set multimeter to a range that will measure 24 volts.

Step 3. Touch positive lead of multimeter to positive contact end of battery slave receptacle.

Step 4. Touch negative lead of multimeter to negative contact end of battery slave receptacle. Voltage should be present.

If voltage is not present, go to test 3.

Test 3. Test continuity of battery slave receptacle leads.

Step 1. Set multimeter to RX1 scale.

Step 2. Disconnect lead 49 from battery terminal (positive).

Step 3. Touch positive lead of multimeter to contact end of lead 49 at battery.

Step 4. Touch negative lead of multimeter to contact end of lead 49 at battery slave receptacle. Continuity should be present.

a. If continuity is present, go to step 5.

b. Replace slave receptacle if continuity is not present (para. 4-56).

Step 5. Disconnect lead 50 from battery slave receptacle and battery ground.

Step 6. Touch positive lead of multimeter to contact end of lead 50 at battery ground.

Step 7. Touch negative lead of multimeter to contact end of lead 50 at battery slave receptacle. Continuity should be present.

a. If continuity is present, go to malfunction 1.

b. Replace slave receptacle if continuity is not present (para. 4-56).

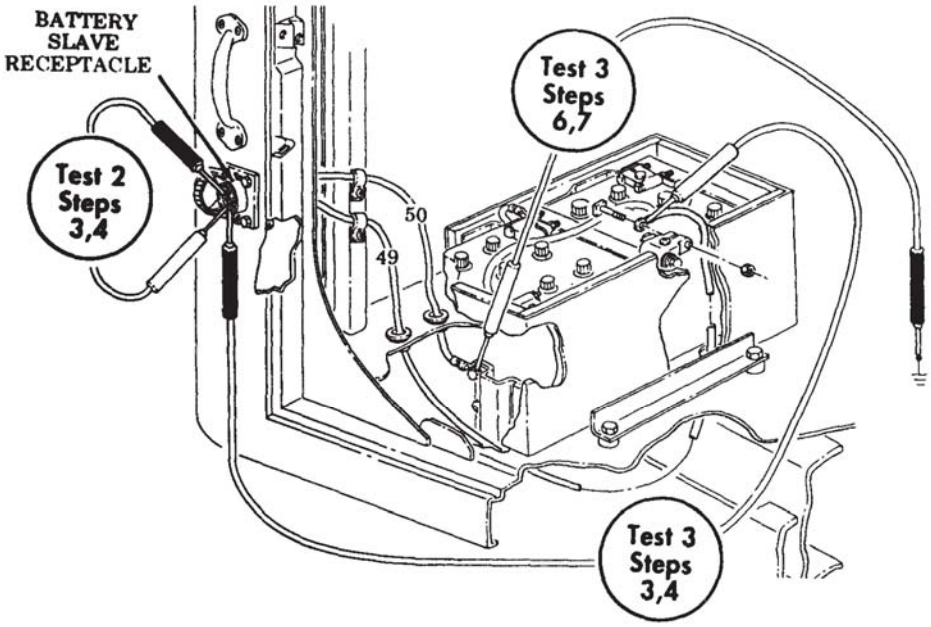

END OF TESTING!

Table 2-4. Electrical Troubleshooting (Contd).

MALFUNCTION TEST OR INSPECTION CORRECTIVE ACTION

TRAILER CONNECTION SYSTEM

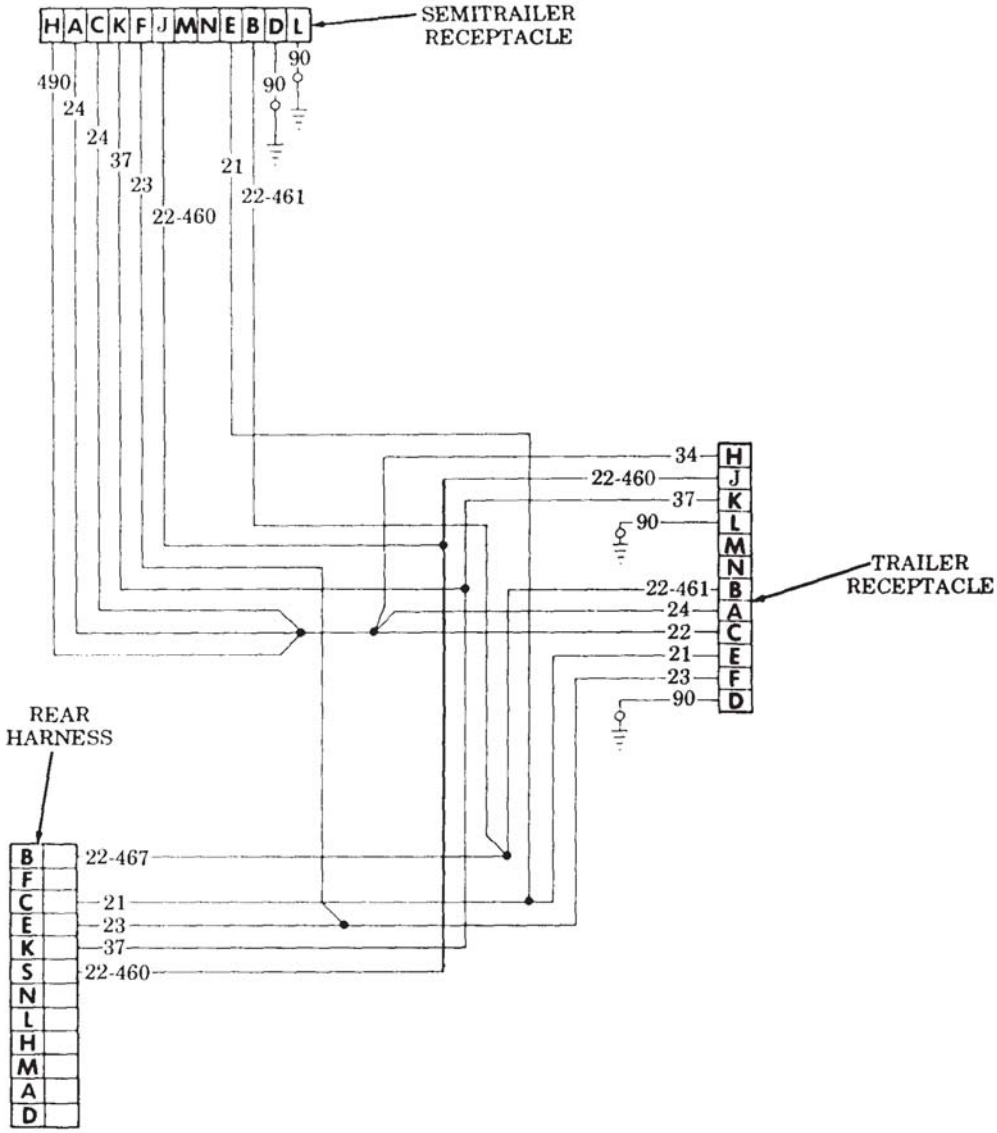

43. ONE OR MORE TRAILER LIGHTS INOPERATIVE

NOTE

For stoplight circuit test, brake pedal must be depressed and air pressure maintained.

Test 1. Test trailer receptacle voltage.

Step 1. Turn main light switch lever to position corresponding to inoperative lamp.

Table 2-4. Electrical Troubleshooting (Contd).

MALFUNCTION TEST OR INSPECTION CORRECTIVE ACTION

Step 2. Set multimeter to a voltage range that will measure 24 volts.

Step 3. Touch negative lead of multimeter to trailer receptacle pin D.

Step 4. Touch positive lead to appropriate trailer receptacle pin of circuit being tested. Light switch must be in corresponding position.

a. Battery voltage should be present at trailer receptacle being tested.

b. If battery voltage is present, disconnect and reconnect male connector to ensure positive connection. If trailer lamps still do not light, check male connection for corrosion. If trailer lamps still do not light, check trailer lighting system.

c. If battery voltage is not present at one or more of the pins being tested, go to test 2.

Test 2. Test trailer receptacle ground.

Step 1. Set multimeter to RX1 scale.

Step 2. Touch negative lead of multimeter to frame ground.

Step 3. Touch positive lead of multimeter to pin D of trailer receptacle. Continuity should be present.

a. Repair or replace harness if continuity is present (para. 4-52).

b. Repair or replace lead 90 if continuity is not present (para. 4-52).

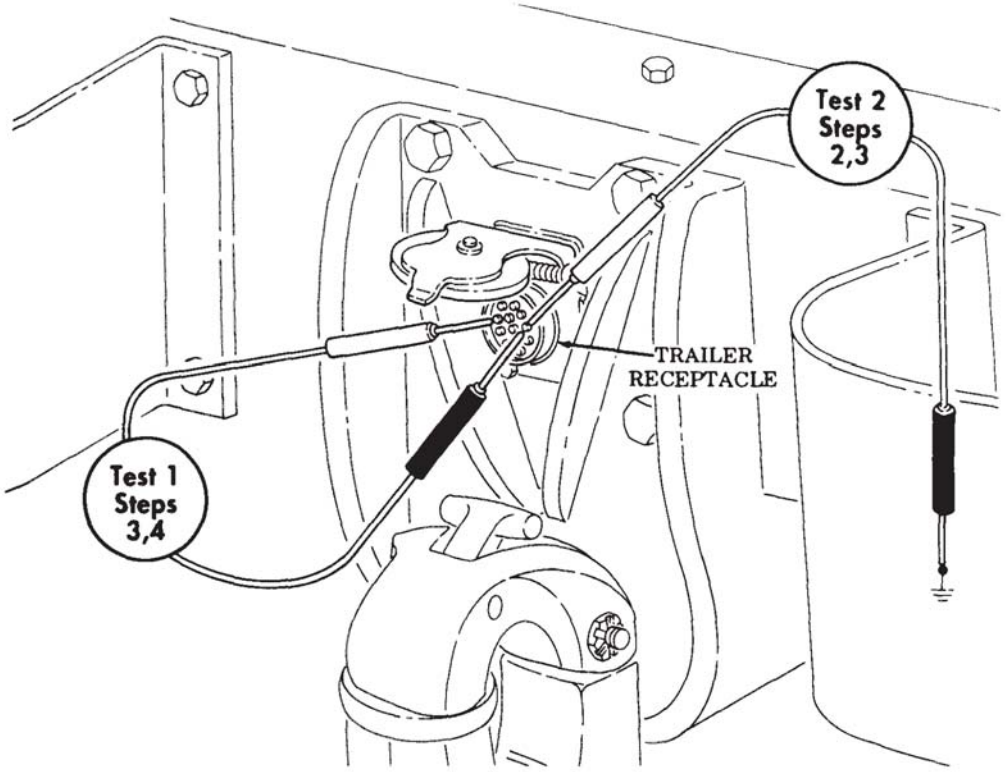

END OF TESTING!

Section VII. STE/ICE TROUBLESHOOTING (SIMPLIFIED TEST EQUIPMENT FOR INTERNAL COMBUSTION ENGINES)

2-16. GENERAL

a. This section is applicable only if STE/ICE is available. The section contains information and tests which may be used with STE/ICE to locate malfunctions that may develop in vehicle. Tests can be used during troubleshooting, PMCS, or after replacing parts to isolate malfunctions, anticipate failures, and to make sure that proper repairs have been made.

NOTE

See Tables 2-8 and 2-9 for a listing of STE/ICE tests and their related page numbers.

b. STE/ICE is used primarily with the vehicle electrical system. These tests cannot cover all possible malfunctions which may occur. If a particular malfunction is not covered, refer to Troubleshooting Index (Chapter 2) and locate troubleshooting procedure for malfunction observed. To obtain maximum number of observed symptoms of the malfunction, question the operator.

2-17. STE/ICE CHAIN INDEX

Preventive Maintenance Checks and Services (Table 2-1) contain a list of various malfunctions which may occur during operation or inspection of the vehicle. When one of the malfunctions listed occurs, the mechanic proceeds to the associated STE/ICE Chain Index (Tables 2-8 and 2-9).

2-18. VEHICLE TEST METER (VTM) TROUBLESHOOTING

Vehicle test meter (VTM) troubleshooting procedures can be found in STE/ICE Go-Chain Tests (Table 2-10). Additional VTM troubleshooting can be found in TM 9-4910-571-12&P, Simplified Test Equipment for Internal Combustion Engines.

2-19. STE/ICE TESTS AND SETUP PROCEDURES

a. STE/ICE Tests. The STE/ICE testing capabilities that may be applied to the M809 PMCS are listed in Table 2-9 and are included in Table 2-11. Test capabilities that may be applied to troubleshooting are specified in Table 2-8.

b. STE/ICE Setup Procedure. STE/ICE setup and internal checks (test No. G01, Table 2-10) must be performed prior to performing tests.

2-20. STE/ICE DESCRIPTION AND OPERATION

a. General. The following describes operation of Simplified Test Equipment/Internal Combustion Engines (STE/ICE) system and contains detailed operating procedures.

It is used to test serviceability of 5-ton vehicles and to perform primary fault detection and isolation. After technician has identified a faulty part or subsystem, he is referred to a paragraph number for replacement or repair procedures for individual parts.

2-20. STE/ICE DESCRIPTION AND OPERATION (Contd)

b. Description and Operation. STE/ICE is a testing system that performs tests and measurements on internal combustion engines. STE/ICE measures standard voltage, current, resistance, pressure, temperature, and speed measurements. Special tests, such as a compression balance tests and starter system evaluations, are performed by STE/ICE. Standard equipment functions including vacuum pressure gage, compression gage low-current tester, and multimeter are features of STE/ICE set.

STE/ICE is portable and operates on either 12- or 24-volt vehicle batteries or equivalent power source. The STE/ICE system consists of a Vehicle Test Meter (VTM), a Transducer Kit (TK), six electrical cables, a transit case, test cards (if equipped), and technical publications.

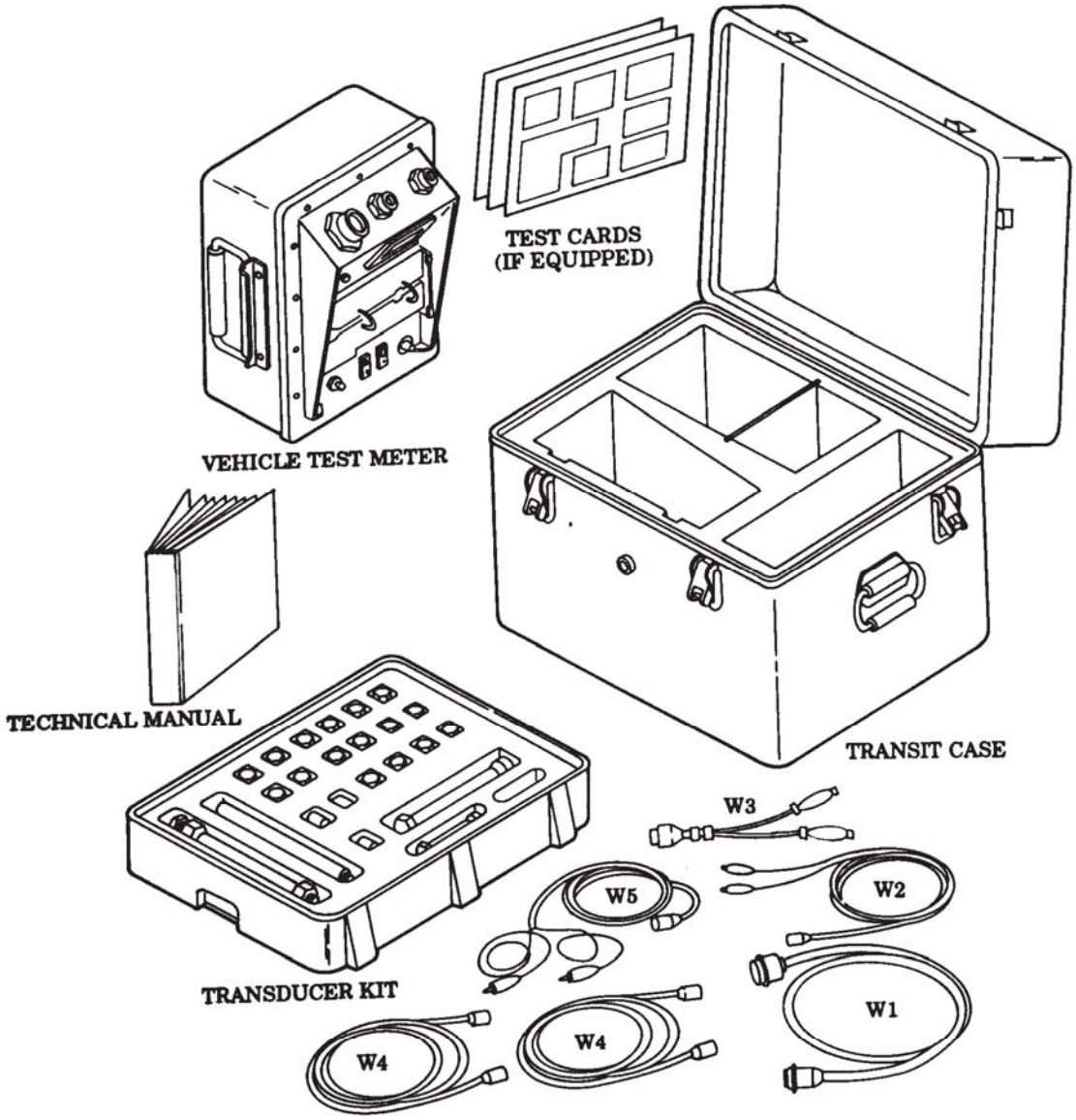

STE/ICE EQUIPMENT

2-20. STE/ICE DESCRIPTION AND OPERATION (Contd)

(1) General. The VTM provides a method for technician to test vehicle electrical and mechanical components. Readings are either pass/fail indications or digital displays in units familiar to technician (psi, rpm, volts, ohms, amps, etc.). The VTM interfaces with vehicle directly with a transducer(s) from Transducer Kit (TK). Additional tests can also be done that involve manually probing and/or connecting transducers to appropriate test points. Operating power for VTM is drawn from vehicle batteries or some equivalent power source. Power is routed to VTM through cable clamps connected to battery. The STE/ICE general purpose testing capabilities that may be applied to vehicle are: 0-1000 psig pressure, 0-45 volts DC, and 0-40k ohms resistance. The following control functions can be performed in conjunction with special tests: interleave (displays rpm with next test), display maximum value, display minimum value, and display peak-to-peak value.

(2) Controls and Indicators. The controls and readout display on VTM are illustrated. The following paragraphs describe how controls and display functions are used.

(a) Power Switch (PUSH ON/PULL OFF). The power switch controls DC power to VTM. The VTM can operate from either a 12-volt or 24-volt battery system. When power switch is pushed in (PUSH ON), VTM power is on. To shut VTM off, pull out power switch (PULL OFF). The power switch contains a 4-amp circuit breaker. If a fault occurs and VTM uses more power than it should, power switch will pop out automatically. Check your hookup carefully and try again before returning VTM to support maintenance.

(b) TEST SELECT Switches. TEST SELECT switches are used to select actual test to be performed. There are ten positions on each switch, numbered 0 through 9. The number dialed into these switches is read by VTM when you press TEST button. Changing TEST SELECT switch positions has no effect until TEST button is pushed.

(c) TEST Button. Depressing and releasing TEST button causes test measurement to begin. Observe measured value on readout display. The reading will be in units normally used for a particular vehicle measurement. These units are listed on the flip cards. The TEST button must be pressed and immediately released. Depressing and holding TEST button down initiates an offset test. Offset tests are described in TM 9-4910-571-12&P.

(d) Readout Display. The readout display will show different types of readouts during testing up to a maximum of 4 characters (for example .8.8.8.8). Types of readouts are described in detail in paragraph (3) below and are summarized as follows:

1. Status Readout. This type of readout keeps technician informed of what is happening such as power applied, failed test, etc.

2-20. STE/ICE DESCRIPTION AND OPERATION (Contd)

2. Numerical Readout. This type of readout is the measured value in units of the measurement being made. If you are measuring 0-45 volts DC, the number 24 on display indicates 24 volts.

3. Error Readout. This type of readout indicates that wrong test number was selected or transducer is not connected, or VTM is faulty.

(e) Flip Cards. The flip cards list the 2-digit test number system for selecting various tests. The cards also summarize test and operating instructions contained herein.

(f) Transducer Cable Connectors, J2 and J3. Connectors J2 and J3 connect VTM to two W-4 cables and signals from transducers are supplied to VTM through the cables. Connectors J2 and J3 are identical and can be interchanged with each other or used in combination.

(g) Test Probe Cable Connector J4. Connector J4 connects W-2 cable to VTM when doing manual voltage and resistance tests.

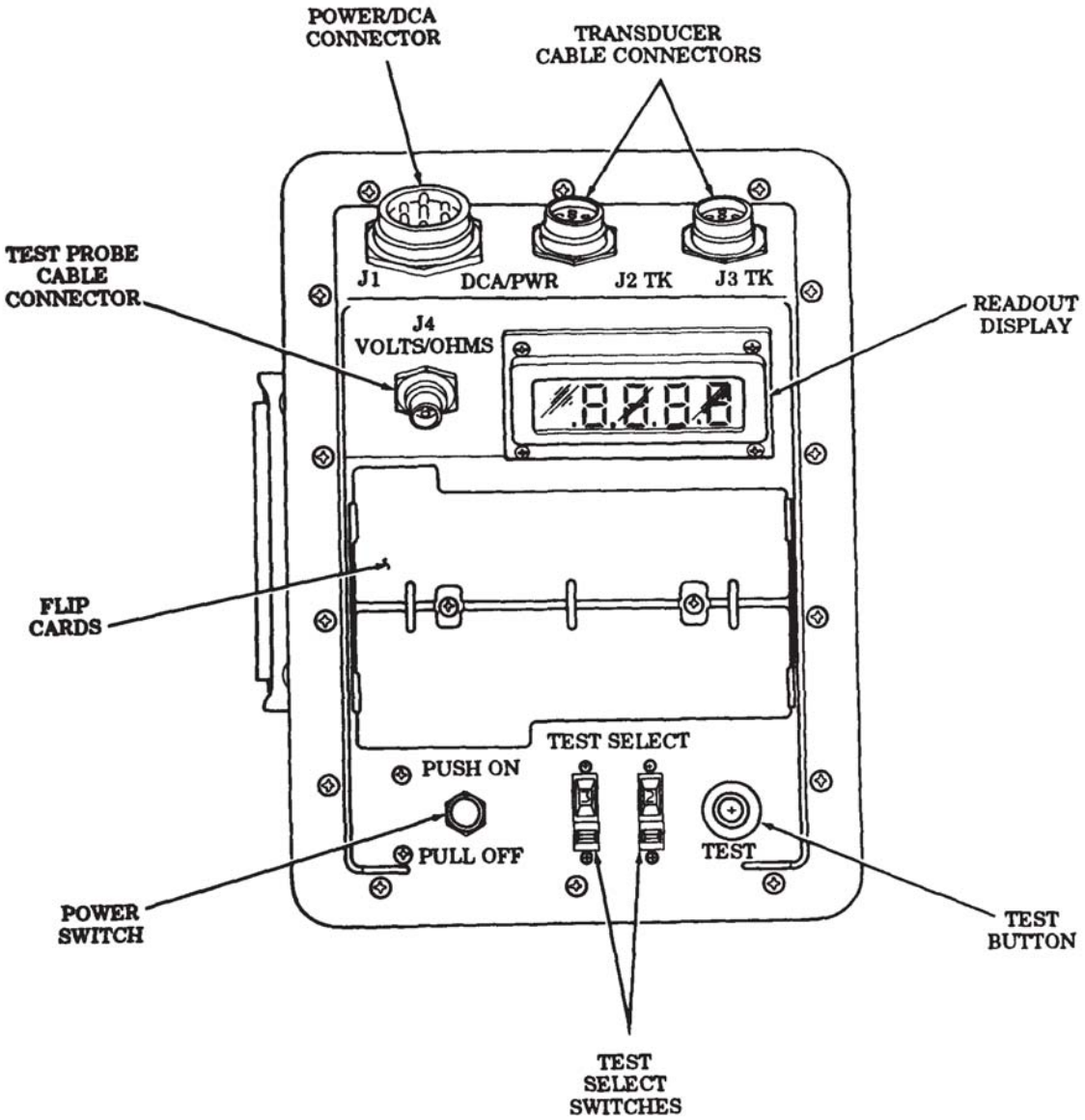

2-20. STE/ICE DESCRIPTION AND OPERATION (Contd)

(3) Readouts. The following paragraphs describe different types of readouts that can occur during testing.

(a) Status Readout. A status readout keeps technician informed of what is happening. For example, .8.8.8.8 is displayed each time the power switch is pushed on. It means that power is applied, and that all elements of the display are operative. It changes to four dashes 1.5 seconds later, indicating that the VTM is ready to be used for testing. The status readout displays are described in Table 2-5.

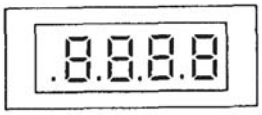

(b) Prompting Message. A prompting message is a technician action message. It is a signal for you to do something such as crank engine. For example, UEH tells you to enter the vehicle identification number into VTM. After technical action is performed, test will automatically continue. Prompting messages are listed in Table 2-6.

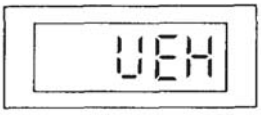

(c) Numerical Readout. A numerical readout is the measured value in units of measurement being made. For example, if you are measuring 0-45 volts DC, 12.7 is volts DC. If you are measuring 0-25 psig pressure, 12.7 is psig. Units for each test are listed on the flip card.

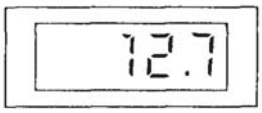

(d) Error Readout. E001 is a typical error readout. There are 14 different error readouts. All of these error readouts start with E. An error readout is a warning that you forgot to connect the transducer, selected a wrong test number, failed to start engine, etc. All error messages mean you must correct problem before continuing testing. Error messages are described in Table 2-7. If an error message does not go away after corrective action, refer to TM 9-4910-571-12&P.

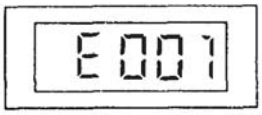

(e) Confidence Error Readouts. C004 is a typical error readout resulting from detection of a faulty VTM during confidence test.

2-20. STE/ICE DESCRIPTION AND OPERATION (Contd)

Table 2-5. Status Readouts.

VTM Readout	Interpretation
.8.8.8.8	A readout of .8.8.8.8 appears for 1 to 2 seconds each time power is applied to VTM. It means that there is power to the VTM, and all elements of readout display are operative.
- - - -	A readout of four dashes indicates the following: (1) After power is turned on, it signifies that VTM is ready for testing. (2) During a compression unbalance test, it signifies testing is in progress. (3) During battery condition test, it signifies battery maybe in discharged state.
.9.9.9.9	A readout of .9.9.9.9 indicates that VTM is reading a test value beyond the range of its measurement capability. Either (1) the wrong test number is selected for parameter being measured; (2) there is a fault in vehicle, or (3) during battery condition test, it signified bad connections, discharged, or bad batteries.
PASS FAIL	PASS or FAIL readout is the result of a test that checks the condition of a component being measured. A PASS/FAIL readout means component either passes the test or fails the test.
AUE	A readout of AUE indicates to the technician the numerical readout is an average value. AUE is displayed only when measuring vacuum variation and the variation is less than one inch of mercury.

Table 2-6. Prompting Messages.

VTM Readout	Interpretation
UEH	Signal to technician to enter vehicle identification number (VID) on TEST SELECT switches. Vehicle ID numbers are found under TEST DATA on flip cards, on vehicle test card, and in appendix.
GO	Signal to technician to crank engine in compression unbalance or first peak tests. During battery condition test, indicates a weak battery in series pair of batteries being tested.
CIP	Signal to technician to apply full throttle in a CI power test.
OFF	Signal to technician to stop cranking in compression balance test.
CAL	Signal to the technician to release the TEST button during an offset test.
0066	Numbers are used for prompting messages in several tests. They are as follows: in confidence, test 66 signals the technician to dial in “99,” in CI acceleration/deceleration power test No. 12, the first numerical readout signals the technician to shut off fuel.

2-20. STE/ICE DESCRIPTION AND OPERATION (Contd)

Table 2-7. Error Readouts.

VTM Readout	Interpretation
E000	Occurs if you request VTM for information it does not have. For example, if you request vehicle ID and it has not yet been entered.
E001	Indicates that a non-existent test number has been dialed into TEST SELECT switches.
E002	Indicates that required transducer is not connected.
E004	Indicates that a vehicle identification number or number of cylinders information has not been entered.
E005	Indicates that transducer offset test was not performed.
E007	Indicates a conflict between vehicle identification number (VID) dialed in and the number of cylinders dialed in. It may occur in response to either VID entry or number-of-cylinders entry.
E008	Indicates VTM is not receiving required voltage signal for test selected. This error code is related only to starter and compression balance tests.
E009	Indicates that engine is not running at start of test.
E01O	Indicates that wrong vehicle identification number has been entered.
E011	Indicates that throttle control was operated incorrectly during power test, taking too much time to either accelerate or decelerate.
E012	Pulse tachometer is missing.
E013	Indicates bad data were taken for test in progress. Repeat test one (1) time.
E014	Indicates that a wrong number of cylinders was dialed into VTM.
E018	Indicates that an engine rpm or AC frequency test was terminated automatically to protect VTM. Termination is only after several minutes of no-signal operation. Most likely VTM was left on vehicle and engine stalled.

2-20. STE/ICE DESCRIPTION AND OPERATION (Contd)

d. Cable Assemblies.

(1) General. Cable assemblies are referred to by cable number and by a name which describes how cable is used. If necessary, two transducer cables (W4) can be joined with adapter supplied in the transducer kit to make one long cable.

(2) Installation. When cables are connected, the large key on cable connector mates with a keyway on transducer connector or VTM connector for proper installation. If you experience any difficulty during testing and suspect that a cable is bad, refer to TM 9-4910-571-12&P for checking cable continuity.

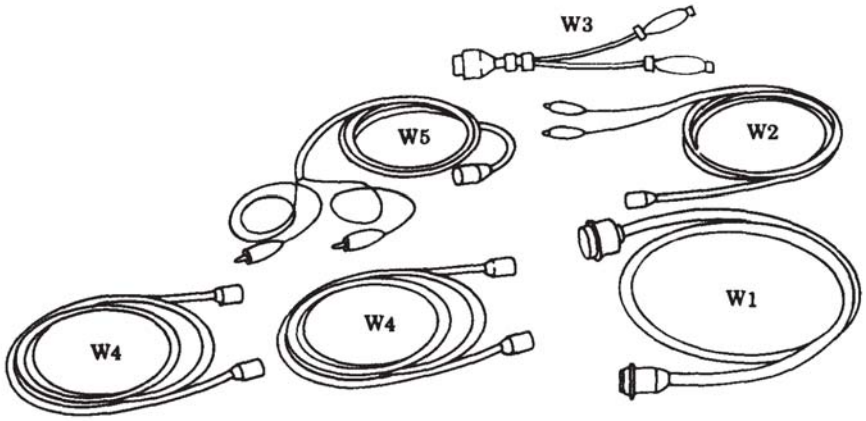

CABLE ASSEMBLIES

e. Transducer Kit (TK).

(1) General. The transducer kit contains a pulse tachometer transducer, a pressure and a vacuum transducer and necessary adapters (bushings, plugs, tees, etc.). Also included in transducer kit is a current probe for measuring current and a test probe cable for measuring voltage and resistance.

All fittings do not have part number markings. The legend will help to identify items.

Before installing any transducer kit item on vehicle, be sure to clean the mounting surfaces. This is particularly important if you are going to open fuel lines or tap into manifolds. Dirt particles entering engine can cause damage to both engine and transducer kit item.

The transducers should be kept clean, free of dirt and grease, and handled with reasonable care.

2-20. STE/ICE DESCRIPTION AND OPERATION (Contd)

(2) Pressure Transducers. Pressure transducers have a small breather hole on the side of the housing which should be kept unplugged. Do not use high pressure shop air to clean transducers.

(3) Pulse Tachometer. Make sure that slotted hole in engine tachometer driveshaft is clear and not hard packed with lubricant before installing pulse tachometer.

(4) Threaded Adapters. Observe threaded fittings carefully to avoid engaging straight threads with pipe threads.

Each measuring device (transducer) in transducer kit has its own identification resistor. The VTM uses this identification resistor to check that correct transducer is connected for measurement being made. If the correct transducer is not connected, error code E002 will be displayed.

2-21. VEHICLE TESTING

a. General. To troubleshoot a vehicle problem, the technician can use STE/ICE (vehicle test meter and transducers) and vehicle test card.

b. Offset Tests. STE/ICE VTM performs a test by setting TEST SELECT switches to test number and pressing TEST button. For some tests, an offset test is required before test itself can be performed. This is done by selecting number of desired test and holding TEST button down for several seconds.

The offset test voids characteristic differences in VTM, test leads, and transducers. It "zeros" meter. Once offset is performed, VTM automatically corrects for offset before displaying measured values. Displayed offset value should be checked against limits on vehicle test card. If displayed value is outside these limits, either transducer or test cable is faulty and must be replaced. This is another form of self-test. The offset is performed when each transducer is connected. All tests requiring offset are identified by an asterisk (*) on flip cards and by OFFSET LIMITS on vehicle test cards. The offset test is performed with test probe cable or transducer connected to VTM. Care should be taken to see that no stimulus is applied to transducer. Test probe cable leads should be shorted together. To perform an offset test, dial test number into TEST SELECT switches. Press and hold TEST button until prompting message CAL appears on display. In a few seconds after release of TEST button, a number will appear. This is measured offset value associated with test probe cable or transducer and cable.

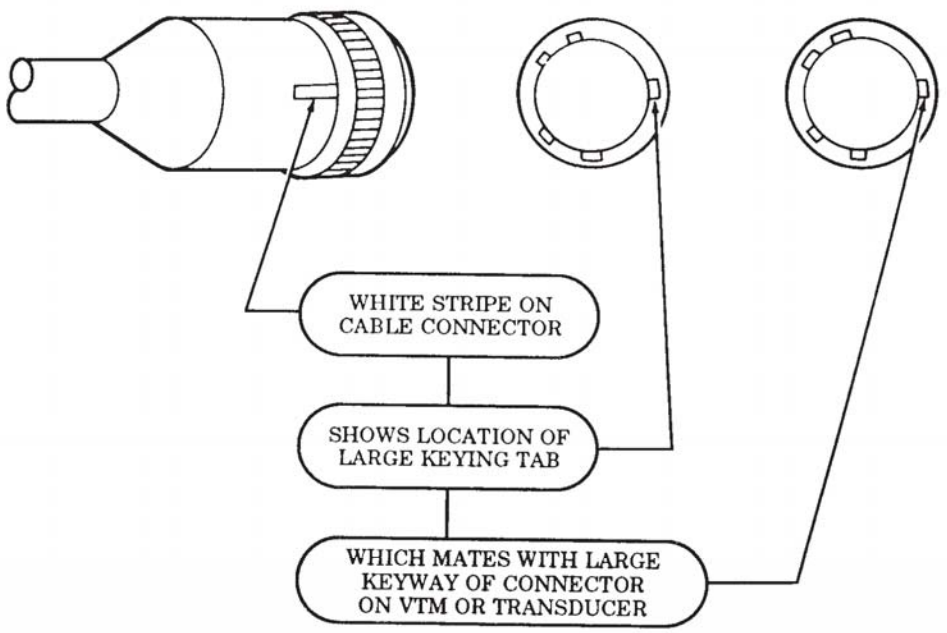

CONNECTOR KEY LOCATION

2-21. VEHICLE TESTING (Contd]

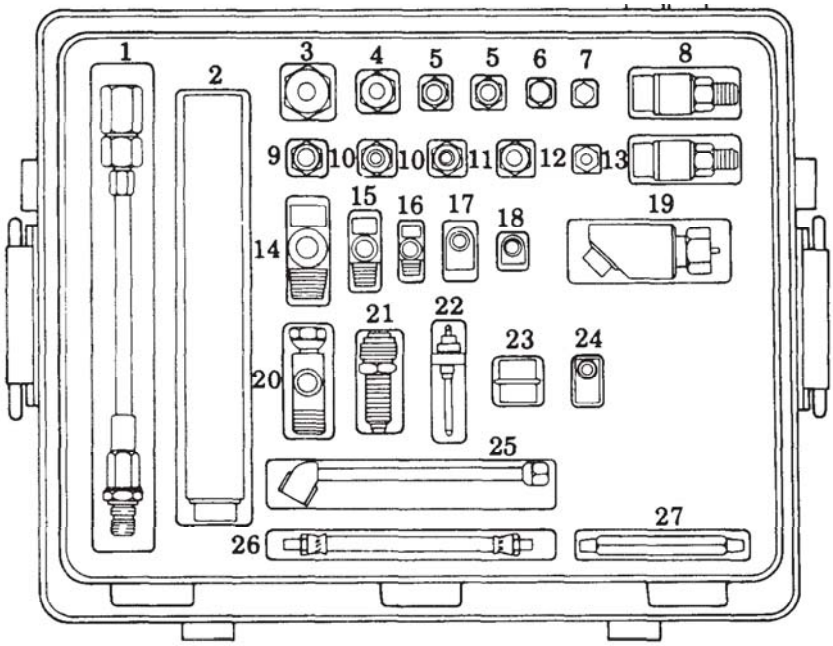

Transducer Kit.

ITEM NO.	TK NO.	PART NO.	QTY	ITEM
1	10	11669227	1	Compression test hose and fitting assembly
2	11	12258878	1	Current probe
3	12	12258853-1	1	Pipe thread reducer, 3/4 MPT to 1/4 FPT
4	13	12258853-3	1	Pipe thread reducer, 1/2 MPT to 1/4 FPT
5	14	12258853-2	2	Pipe thread reducer, 3/8 MPT to 1/4 FPT
6	15	444620	1	Pipe plug, 1/4 MPT
7	16	5327970	1	Pipe plug, 1/8 MPT
8	17	12258876	1	Pressure transducer, blue stripe, 0-1000 psig
9	21	12258881	1	Snubber
10	20	444012	2	Adapter, 1/8 MPT to 1/4 FPT
11	19	444104	1	Coupling reducer, 1/8 FPT to 1/4 FPT
12	18	187343	1	Male connector, 5/16 tube to 1/4 MPT
13	22	12258877	1	Pressure transducer, red stripe, -30 in. Hg to 25 psig
14	23	444152	1	Street tee, 1/2 pipe thread
15	24	8366166	1	Street tee, 1/4 pipe thread
16	25	444550	1	Street tee, 1/8 pipe thread
17	26	12258879-2	1	Street elbow, 1/4 pipe thread
18	27	12258879-1	1	Street elbow, 1/8 pipe thread
19	34	12258875	1	Pulse tachometer
20	32	12258880	1	Fuel line adapter
21	31	MS53099-2	1	Tachometer drive adapter
22	30	7540877	1	Ignition adapter
23	29	MS3119E14-19	1	Adapter (connector-receptacle)
24	28	12258762	1	Tee, inverted flare
25	33	8840543	1	Air chuck
26	35	11669236	1	Flexible hose assembly, 1/8 MPT
27	36	12258852	1	Long hex pipe nipple, 1/8 MPT

2-21. VEHICLE TESTING (Contd)

c. Control Tests. These tests are used to change (or control) the way a vehicle test is displayed, or the way it is run. There are four (4) control tests:

01 Interleave (displays RPM with next test).
02 Display minimum value for next test.
03 Display maximum value for next test.
04 Display peak-to-peak value for next test.

Control tests 01, 02, 03, and 04 specify the action to be taken by the next test only. A subsequent test will reset the control.

(1) Interleave (Test 01). This test alternately measures engine speed and a second parameter such as fuel pressure or alternator voltage. To initiate interleave, dial 01 into TEST SELECT switches and press and release TEST button. The prompting message PASS will signal the technician to dial in second test number and again press and release TEST button.

(2) Minimum Value (Test 02). This test displays minimum value measured during a test. To initiate a minimum value display, dial 02 into TEST SELECT switches and press and release TEST button. The prompting message PASS will signal technician to dial in desired test number and again press and release TEST button. The minimum value is displayed and updated whenever a lower minimum value is measured. Entering 02 and test number again will reset process and a new minimum value will be displayed.

(3) Maximum Value (Test 03). This test displays maximum value measured during a test. To initiate a maximum value display, dial 03 into TEST SELECT switches and press and release TEST button. The prompting message PASS will signal technician to dial in desired test number and again press and release TEST button. The maximum value is displayed and updated whenever a higher maximum value is measured. Entering 03 and test number again will reset process and a new maximum value will be displayed.

(4) Peak-to-Peak Value (Test 04). This test displays peak-to-peak value of dwell (test 16), alternator/generator output volts (test 82), 45-volts DC (test 89), 1500 amps DC (test 90), and battery volts (test 67). Electrical peak-to-peak is for measuring dwell variation. To start a peak-to-peak measurement, dial 04 into TEST SELECT switches and press TEST button. The prompting message PASS will signal operator to dial in one of five test numbers (16, 82, 89, 90, 67) and again press TEST button.

2-21. VEHICLE TESTING (Contd)

Table 2-8. CI Engine Go-Chain Index, TK Mode.

GO TEST NUMBER	TEST TITLE	PAGE NUMBER	TABLE NUMBER
G01	VTM Connections and Checkout	2-198	2-10
G02	First Peak Test	2-203	2-10
G03	Pulse Tachometer Installation	2-205	2-10
G04	Engine Start - Lubrication Check	2-206	2-10
G05	Charging Circuit and Battery Voltage Test	2-209	2-10
G06	Engine Warmup/Coolant Check/Oil Pressure Test	2-211	2-10
G07	Governor Check/Power Test	2-213	2-10
G08	Idle Speed/Governor Check	2-215	2-10
G09	Compression Unbalance Test	2-216	2-10

Table 2-9. CI Engine No-Go Chain Index, TK Mode.

GO TEST NUMBER	TEST TITLE	PAGE NUMBER	TABLE NUMBER
NG05	Low Oil Pressure Check	2-218	2-11
NG20	No Crank - No Start	2-220	2-11
NG30	Engine Crank - No Start	2-221	2-11
NG31	Gage Test	2-225	2-11
NG50	Charging Circuit Tests	2-227	2-11
NG80	Starter Circuit Tests	2-232	2-11
NG81	Battery Tests	2-238	2-11
NG90	Governor/Power Test Fault Isolation	2-242	2-11
N2120	Battery Compartment - Positive Side Voltage Drop Checks	2-248	2-11
NG121	Battery Compartment - Negative Side Voltage Drop Checks	2-249	2-11
NG130	Engine Tightness Test	2-250	2-11

NOTE

Test GO1, VTM connections and checkout, must be performed before running any other STE/ICE test.

Table 2-10. STE/ICE Go-Chain Tests.

NOTE

Test G01, VTM Connections and Checkout, must be performed before running STE/ICE tests.

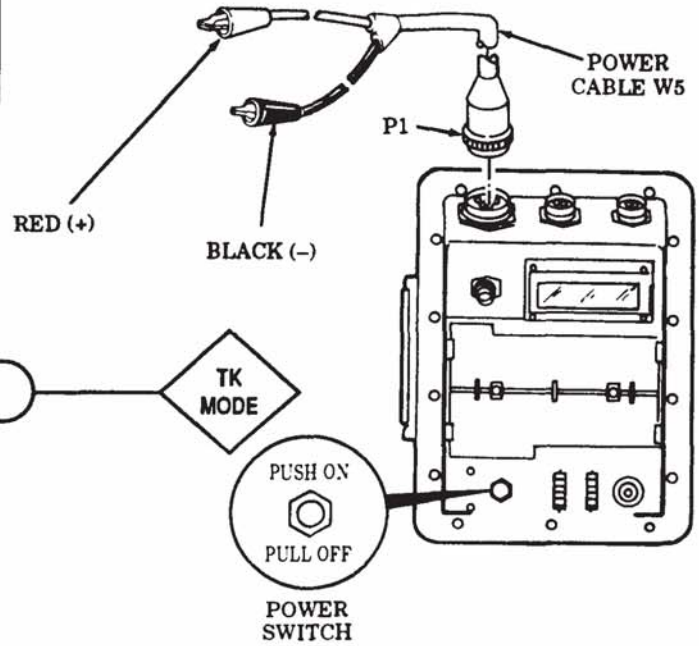

G01 VTM CONNECTIONS AND CHECKOUT

TK MODE

CAUTION

Do not connect or disconnect VTM while vehicle engine is running.

CAUTION

Connect P1 of power cable W5 to J1 on VTM before connecting clip leads to battery.

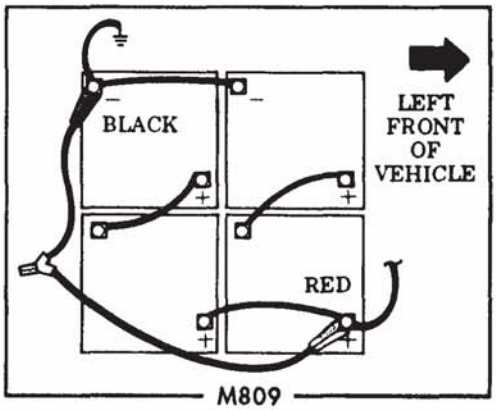

1 CONNECT BATTERY POWER TO VTM:

- PULL OFF the power switch on VTM.
- Connect P1 of power cable W5 to J1 on VTM.
- Connect red clip lead of cable W5 to positive terminal of vehicle battery.
- Connect black clip lead of cable W5 to negative terminal of vehicle battery.

- Proceed to step 2.

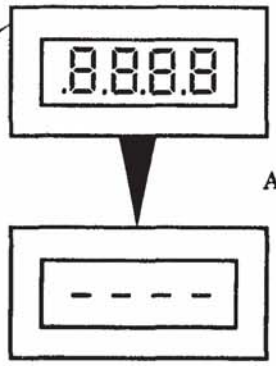

2 POWER UP:

- PUSH ON the power switch on VTM.
- Verify that display indicates .8.8.8.8 for approximately 2 seconds and then changes to four dashes.

- Does VTM switch display .8.8.8.8 and then change to four dashes?

Table 2-10. STE/ICE Go-Chain Tests (Contd).

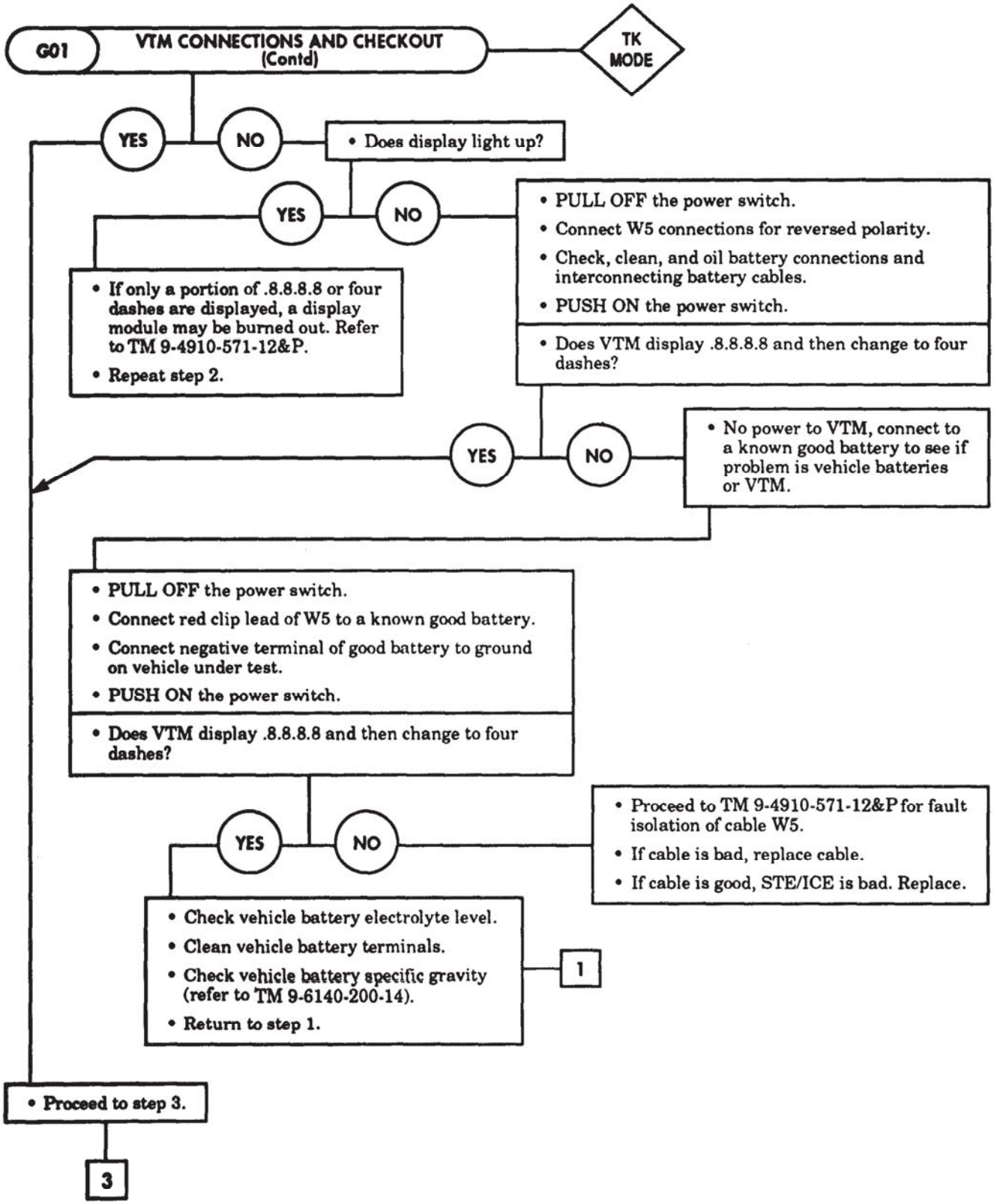

Table 2-10. STE/ICE Go-Chain Tests (Contd).

G01 VTM CONNECTIONS AND CHECKOUT (Contd)

TK MODE

TEST NO.	TEST
66	CONFIDENCE TEST

3 RUN CONFIDENCE TEST:

- Dial 66 into TEST SELECT and press TEST.
- Wait for a readout of 0066 on VTM.

- Does VTM display and hold 0066?

YES — NO

- PULL OFF power switch.
- Repeat steps 2 and 3 one time.

- Does VTM display and hold 0066?

YES — NO

- STE/ICE is bad. Replace.

- Dial 99 into TEST SELECT and press TEST.
- Look for this display:

1 — 0099

2 — (Blank)

3 — .8.8.8.8

4 — (Blank)

NOTE

At this point in test, several numbers will appear on display. What you are looking for is a display and hold of PASS.

Table 2-10. STE/ICE Go-Chain Tests (Contd).

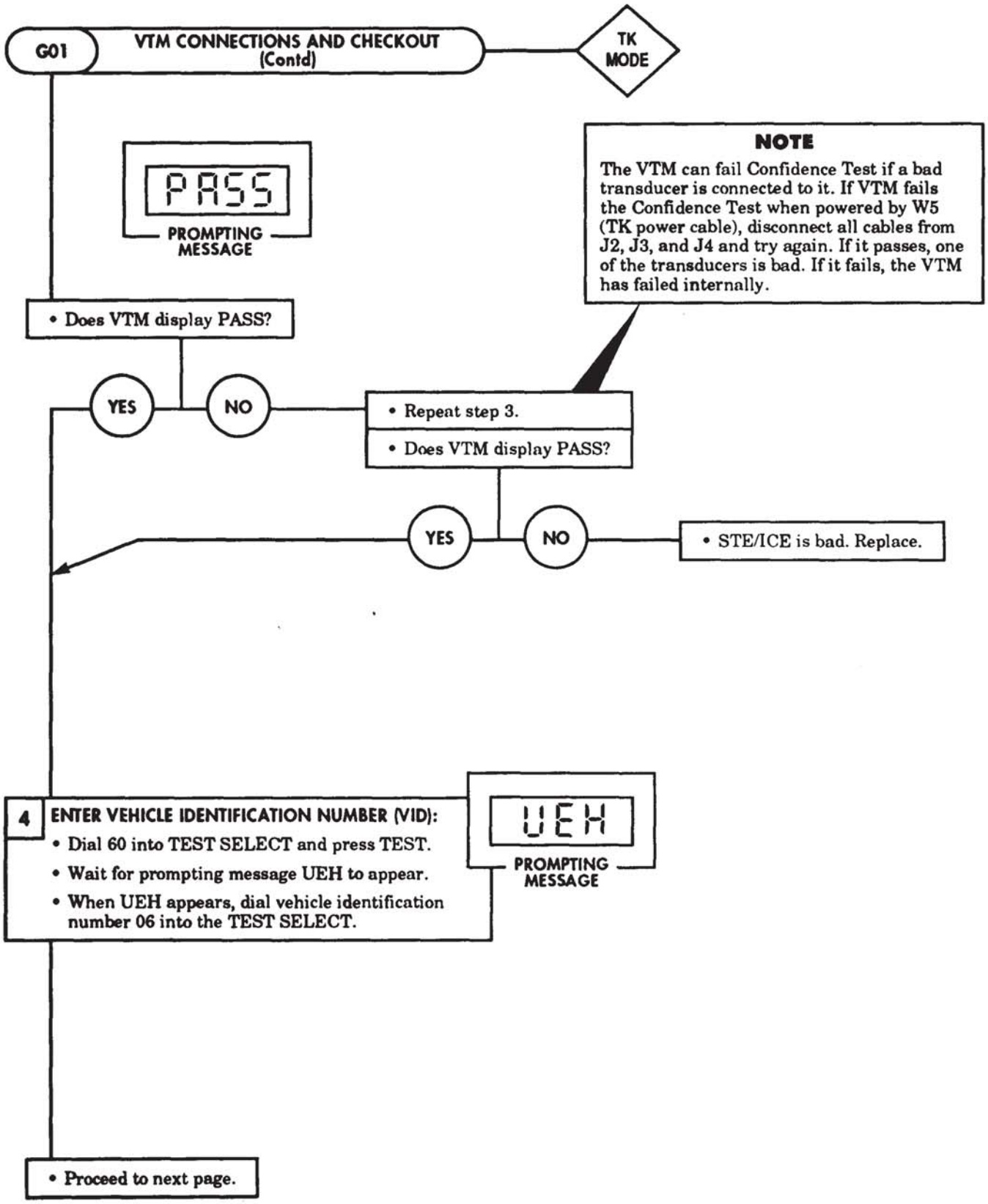

Table 2-10. STE/ICE Go-Chain Tests (Contd).

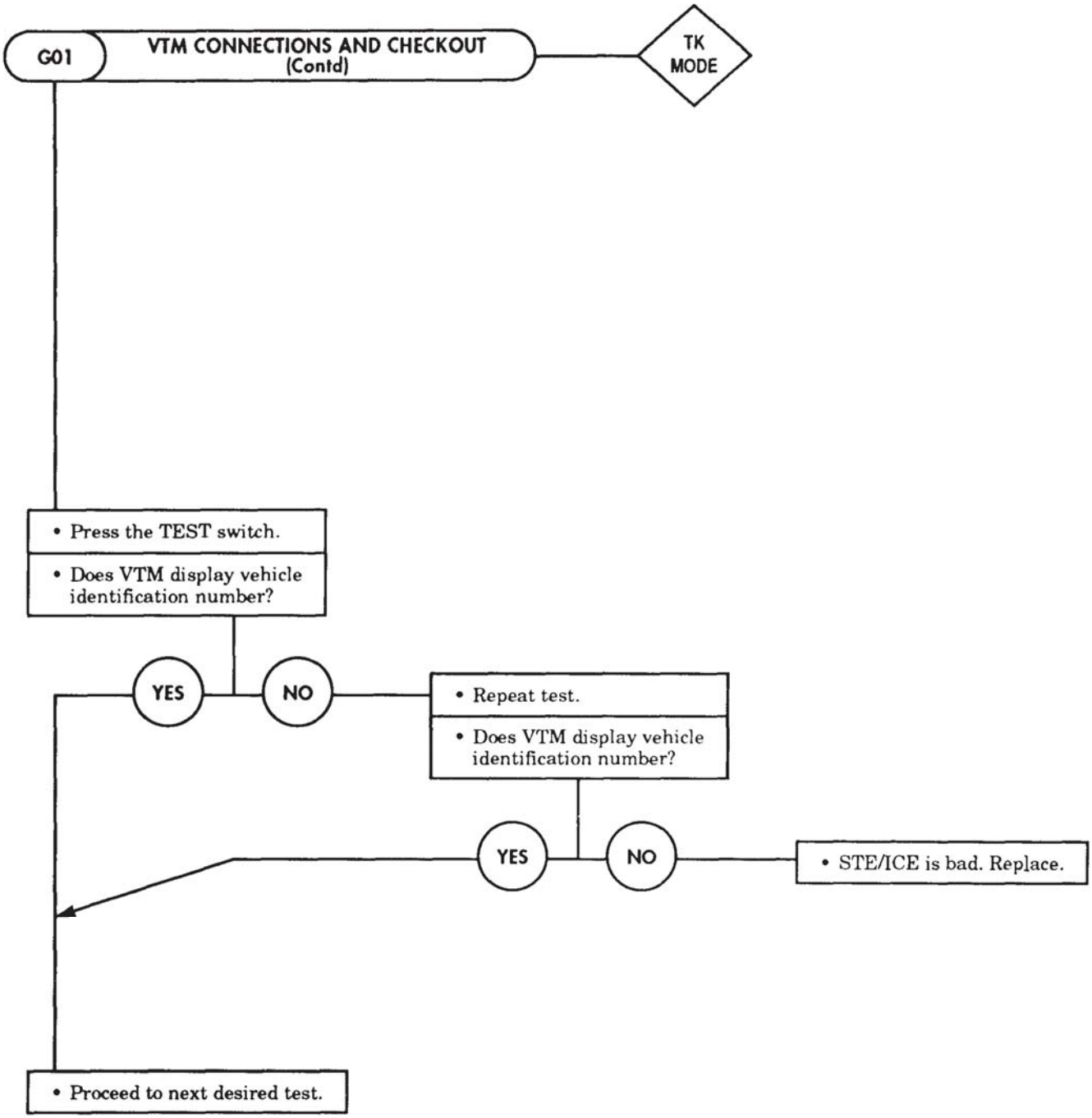

Table 2-10. STE/ICE Go-Chain Tests (Contd).

NOTE

Test G01, VTM Connections and Checkout, must be performed before running STE/ICE tests.

G02 FIRST PEAK TEST — TK MODE

1 CONDITION CURRENT PROBE – DO OFFSET:

- Connect P1 of transducer cable W4 to J2 on VTM.
- Connect P2 of cable W4 to the connector on current probe.
- Clamp current probe around positive battery cable connected to starter.
- Point arrow on the probe toward starter.
- Crank engine for several cycles with fuel shut off.

NOTE

If engine does not crank, go to test NG20.

- Turn off all vehicle electrical power.
- Dial 72 into TEST SELECT.
- Press and hold TEST until CAL message appears on display.
- Release TEST.
- Wait for offset value to appear.

CAL — PROMPTING MESSAGE

TEST NO.	TEST
72	STARTER CURRENT FIRST PEAK

- Is offset value within the limits of -225 to +225?

YES — NO

- Proceed to TM 9-4910-571-12&P offset fault isolation.

2 MEASURE STARTER CURRENT – FIRST PEAK:

- Press TEST.
- Wait for prompting message GO to appear on the display.

GO — PROMPTING MESSAGE — OFF

- When GO appears, shut off fuel and activate starter switch until OFF or an error message is displayed.

NOTE

While cranking engine with bad or discharged batteries, it is possible for VTM to lose power and come on again after cranking has stopped, displaying four dashes. If this ever occurs, immediately proceed to Battery Tests, NG81.

Table 2-10. STE/ICE Go-Chain Tests (Contd).

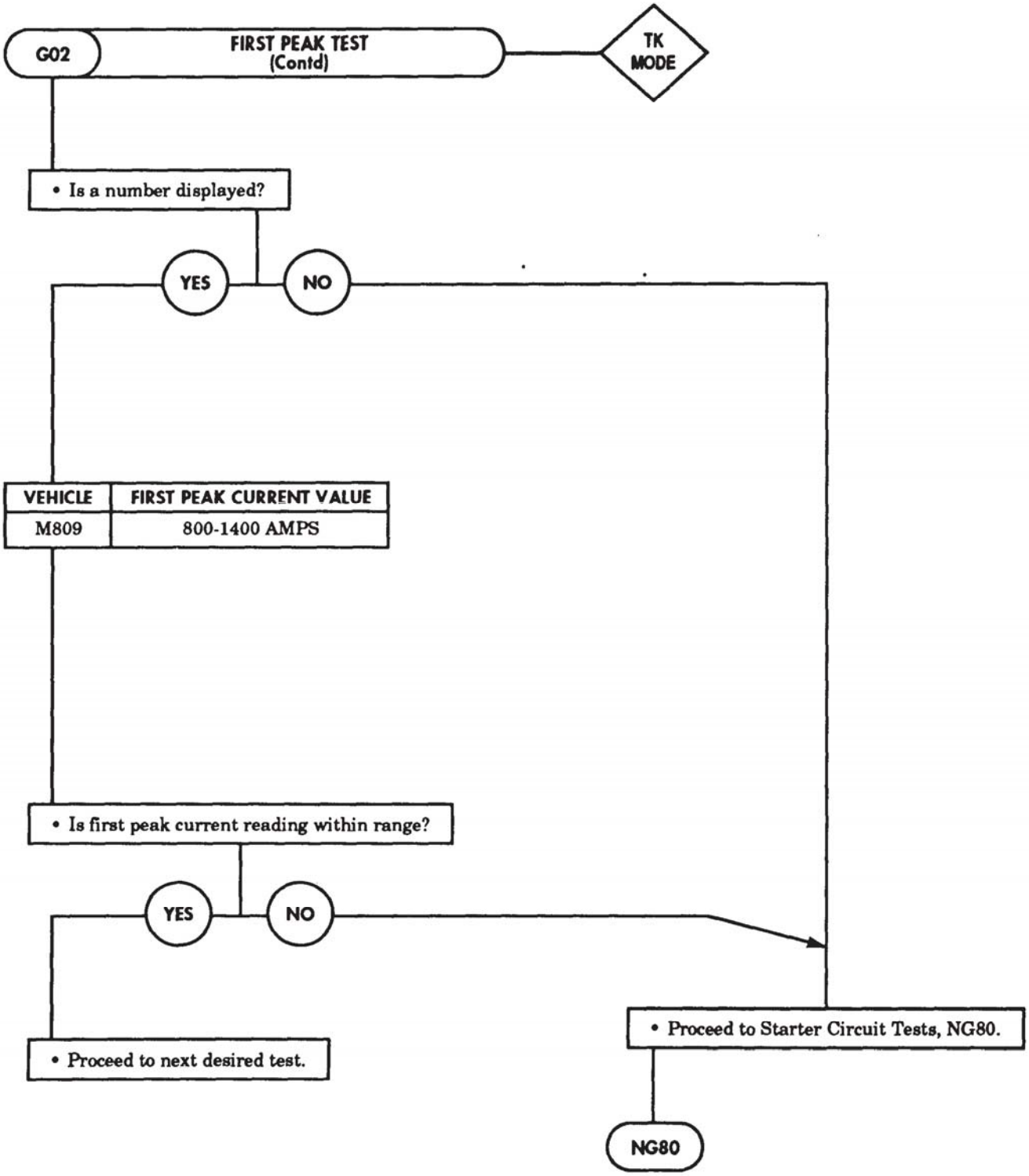

Table 2-10. STE/ICE Go-Chain Tests (Contd).

NOTE

Test G01, VTM Connections and Checkout, must be performed before running STE/ICE tests.

G03 PULSE TACHOMETER INSTALLATION — TK MODE

WARNING

Turn vehicle engine off before installing pulse tachometer.

CAUTION

Clean all mounting surfaces before installing transducer to prevent entry of foreign substances that may damage engine or transducer.

1 INSTALL PULSE TACHOMETER:

- Disconnect tachometer cable from fuel pump.
- Install pulse tachometer, TK Item 34, in place of removed tachometer cable.

2 MAKE CABLE CONNECTIONS:

- Connect P1 of transducer cable W4 to J3 on the VTM.
- Connect P2 of transducer cable to connector on pulse tachometer.

CAUTION

Be sure cable W4 is clear of belts and fan blade.

- Proceed to next desired test.

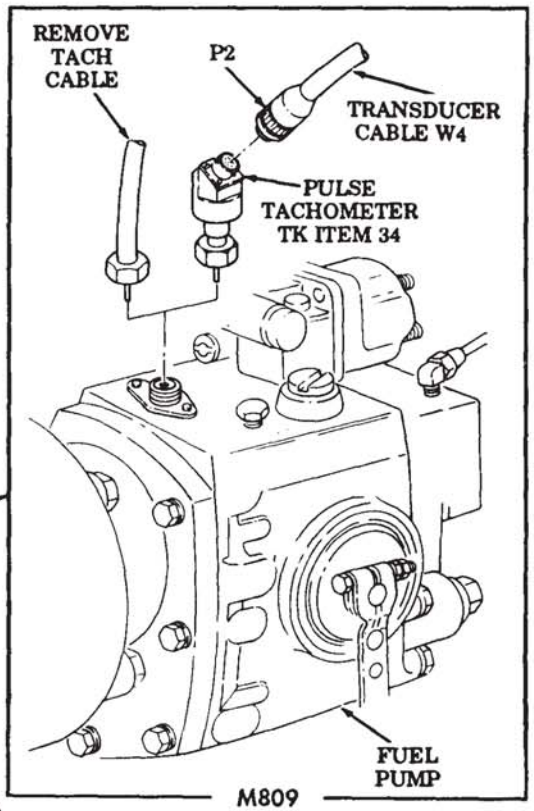

NOTE

On vehicles which have a tachometer on the instrument panel, it is generally possible to disconnect the drive cable from the back of the tachometer and connect the STE/ICE pulse tachometer to it using adapter (TK Item 31). If erratic readings occur, the drive cable may be faulty. In this case, connect the pulse tachometer directly to the fuel pump.

Table 2-10. STE/ICE Go-Chain Tests (Contd).

NOTE

Test G01, VTM Connections and Checkout, must be performed before running STE/ICE tests.

G04 ENGINE START – LUBRICATION CHECK → TK MODE

CAUTION

Check oil level before starting engine.

1 CHECK ALL FLUID LEVELS:

- Check oil level. Add oil if necessary.
- Remove surge tank cap and check coolant level. Add coolant if necessary.
- Check battery electrolyte level. Add distilled water if necessary.

WARNING

Do not remove surge tank cap when engine is hot. Wait until engine cools.

CAUTION

Ensure all hydraulic power switches are off. Disengage manual hydraulic levers if vehicle is so equipped. Damage could result to vehicle.

2 START ENGINE:

- Try to start engine.
- Does engine crank and start?

YES → 3

NO → Does engine crank?

- Does engine crank?

YES → Proceed to Engine Crank – No Start, NG30. → NG30

NO → Turn off battery switch. Proceed to No Crank – No Start, NG20. → NG20

3 CHECK OIL PRESSURE GAGE:

- Check oil pressure gage for minimum oil pressure noted in the table below.

Table 2-10. STE/ICE Go-Chain Tests (Contd).

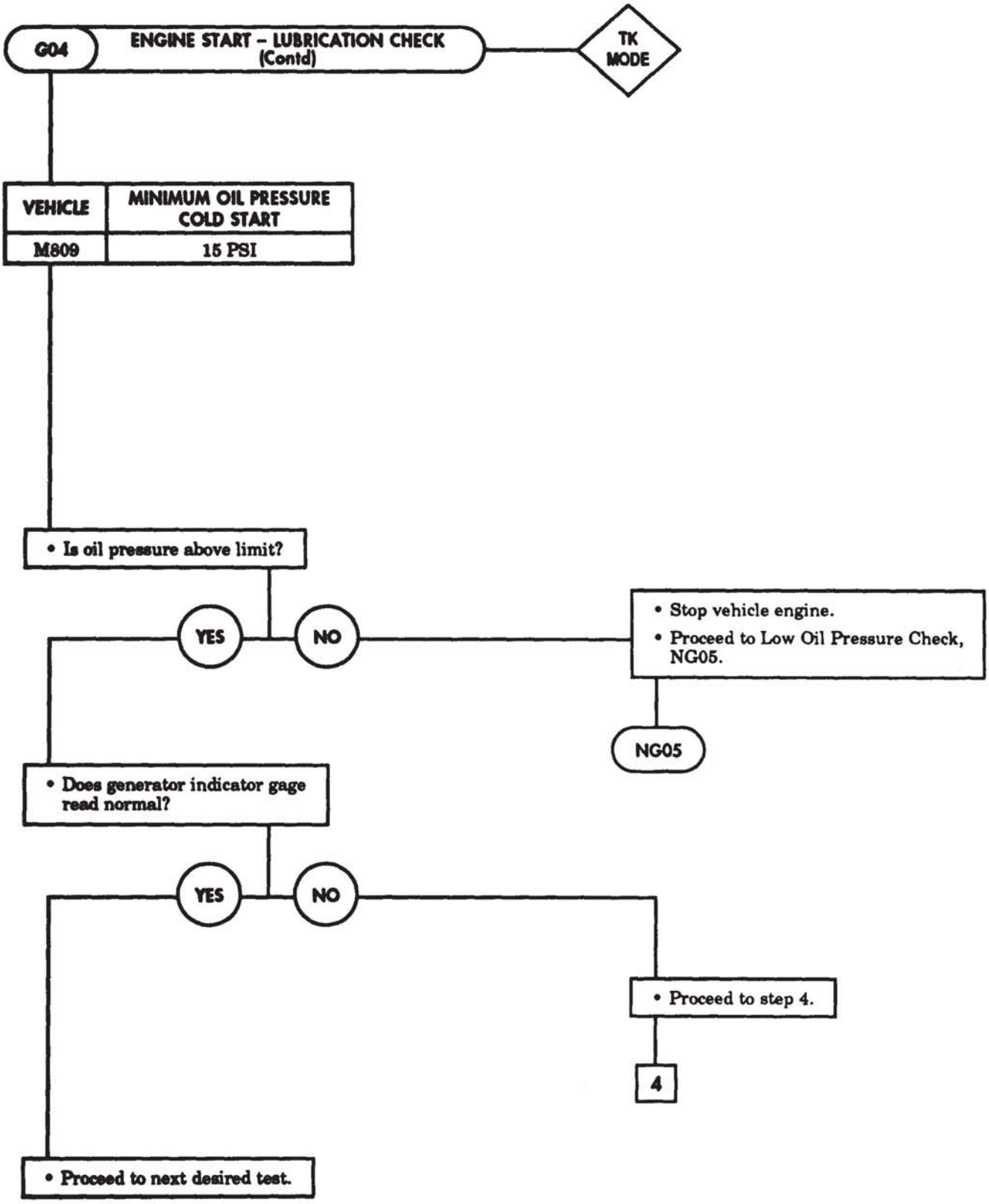

Table 2-10. STE/ICE Go-Chain Tests (Contd).

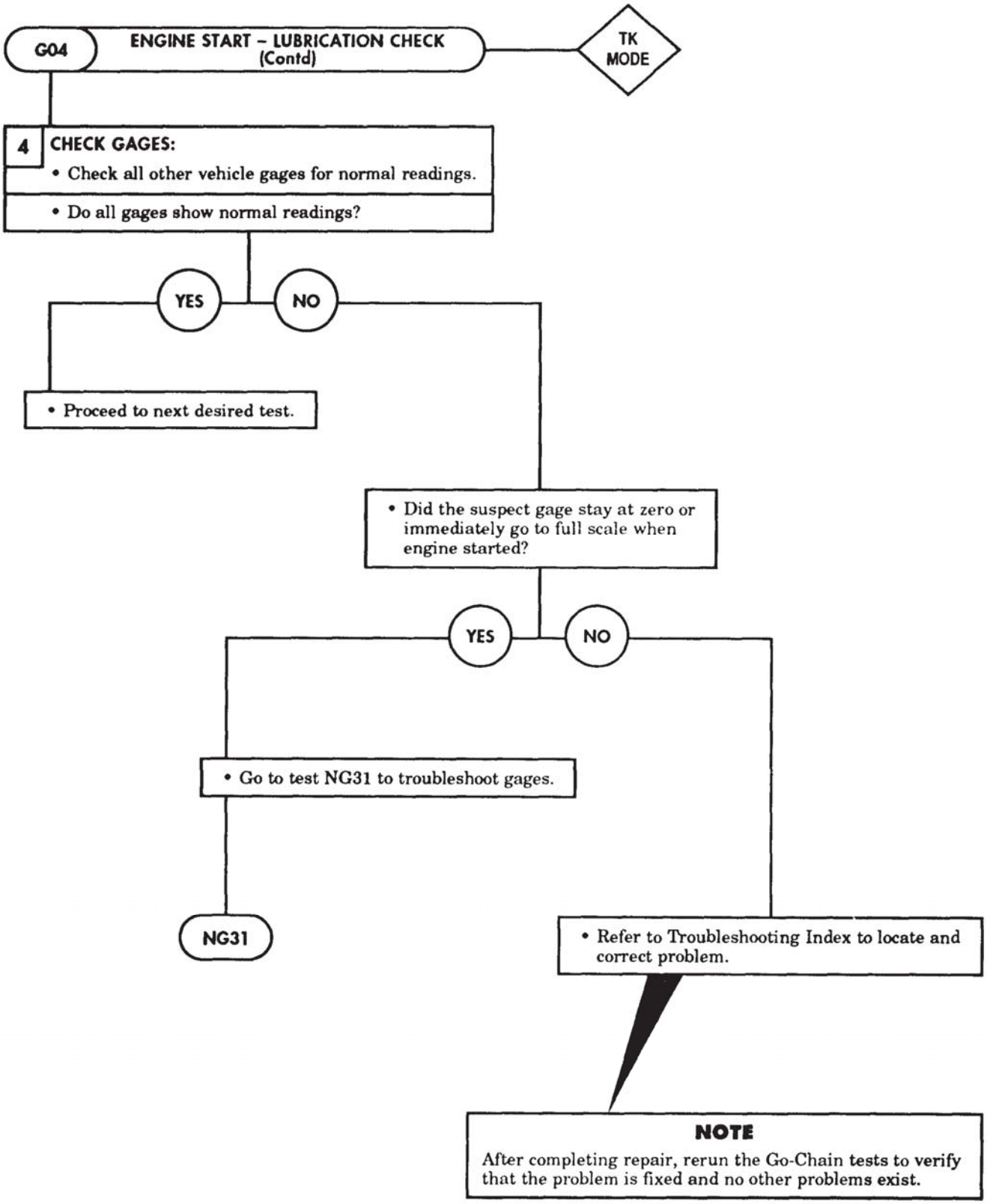

Table 2-10. STE/ICE Go-Chain Tests (Contd).

NOTE

Test G01, VTM Connections and Checkout, must be performed before running STE/ICE tests.

G05 CHARGING CIRCUIT AND BATTERY VOLTAGE TEST — TK MODE

1 SET ENGINE RPM:

- Dial 10 into TEST SELECT and press TEST.
- Run vehicle at 1000-1200 RPM.
- Turn vehicle headlights and/or accessories ON to load charging system.

TEST NO.	TEST
67	BATTERY VOLTAGE

2 MEASURE BATTERY VOLTAGE:

- Dial 67 into TEST SELECT and press TEST.
- Watch display and verify that battery voltage is within 26.5-29.5 volts.

- Is battery voltage within limits?

YES → Proceed to next page.

NO → Is battery voltage low?

YES → Battery voltage is low.

- Battery voltage is low.
- Allow vehicle to run for 5 minutes at fast idle and watch the display.

- Is the battery voltage within limits?

YES → Proceed to next page.

NO →

- Turn off headlights and accessories.
- Turn vehicle engine off.
- Proceed to Charging Circuit Tests, NG50.

NG50

NO → Battery voltage is high.

- Battery voltage is high.
- Refer to Troubleshooting Index to troubleshoot regulator and wiring. If regulator is built into alternator, replace entire unit.

NOTE

After completing repair, rerun Go-Chain tests to verify that the problem is fixed and no other problems exist.

Table 2-10. STE/ICE Go-Chain Tests (Contd).

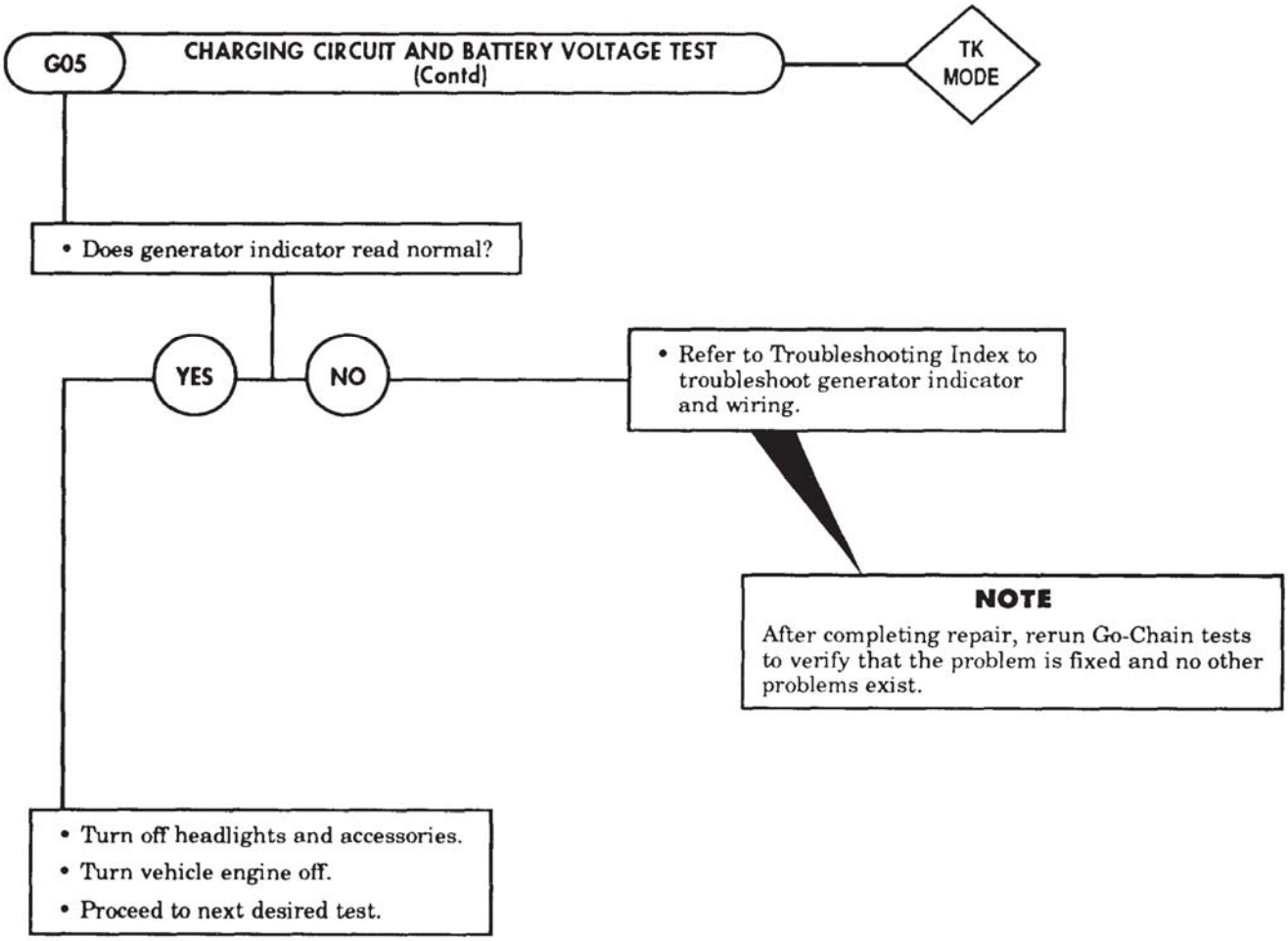

Table 2-10. STE/ICE Go-Chain Tests (Contd).

NOTE

Test G01, VTM Connections and Checkout, must be performed before running STE/ICE tests.

G06 ENGINE WARMUP/COOLANT CHECK/OIL PRESSURE TEST — TK MODE

1 CHECK FOR LEAKS AND COOLANT TEMPERATURE:

- Check vehicle for oil, fuel, and coolant leaks. Refer to appropriate section to repair any leaks.
- Warm up engine to normal operating temperature. Read vehicle temperature gage.

VEHICLE	NORMAL COOLANT TEMPERATURE
M809	120°-186°F

- Does temperature gage read within limits after a normal warmup period?

YES → Proceed to step 2. → **2**

NO → Is temperature too high?

YES → Refer to Troubleshooting Index to troubleshoot engine cooling systems for high temperature. If no problems are found, go to Gage Test, NG31. → **NG31**

NO → Proceed to Gage Test, NG31. → **NG31**

NOTE

After completing repair, return to the Go-Chain tests to verify that the problem is fixed and no other problems exist.

Table 2-10. STE/ICE Go-Chain Tests (Contd).

G06 ENGINE WARMUP/COOLANT CHECK/OIL PRESSURE TEST (Contd) — TK MODE

2 CHECK OIL PRESSURE:

- Dial 10 into TEST SELECT and press TEST.
- Increase engine RPM to that indicated below.
- Watch vehicle oil pressure gage.
- Verify that oil pressure is within limits in table below.

NOTE

If VTM does not display RPM, check:

- Cables and connectors. Replace and check as needed.
- Pulse tachometer. Replace as needed.

TEST NO.	TEST
10	ENGINE RPM

VEHICLE	NORMAL OIL PRESSURE AND MAXIMUM RPM
M809	45-70 PSI @ 2200 RPM

NOTE

Speeds given are approximate. If exact speed cannot be reached, check oil pressure at closest possible speed.

- Is oil pressure within range?

YES — NO

- Proceed to Low Oil Pressure Check, NG05. — NG05

- Proceed to next desired test.

Table 2-10. STE/ICE Go-Chain Tests (Contd).

NOTE

Test G01, VTM Connections and Checkout, must be performed before running STE/ICE tests.

G07 GOVERNOR CHECK/POWER TEST — TK MODE

CAUTION

Governor operation must be checked before performing power test to avoid possible engine damage.

1 CHECK GOVERNOR OPERATION:

- Watch the VTM display.
- Increase engine speed to maximum governor speed shown below.

VEHICLE	MAXIMUM GOVERNOR SPEED
M809	2260 RPM

- Press further on accelerator to full throttle.
- Does engine RPM remain below maximum at full throttle?

YES → 2

NO → Is engine RPM greater than upper limit?

YES → Notify your supervisor.

NO → Engine RPM is below lower limit. Proceed to Governor/Power Test Fault Isolation, NG90. → NG90

Proceed to step 2.

Table 2-10. STE/ICE Go- Chain Tests (Contd).

G07 GOVERNOR CHECK/POWER TEST (Contd)

TK MODE

CAUTION

Do not perform power test if engine temperature is above normal operating temperature. However, the engine should be at operating temperature before performing the power test.

TEST NO.	TEST
12	POWER TEST (RPM/SEC)
13	POWER TEST (% POWER)

NOTE

The vehicle identification number of TEST G01 must have been entered prior to the power test. This will prevent an error message (E004) and unsuccessful completion of the power test. If you do not have a vehicle ID number, but the number of cylinders was entered in G01, use Test 12 for power test instead of Test 13. When using Test 12, the first number to appear on the display is the signal to release the accelerator.

2 PERFORM POWER TEST:

- Dial 13 into TEST SELECT and press TEST.
- Wait for prompting message CIP to appear.
- When CIP appears, rapidly press down on accelerator and hold it to floor until VTM displays OFF.
- When OFF appears, release accelerator.
- A number representing percentage power will appear on VTM.

CIP

PROMPTING MESSAGE

OFF

- Is the percentage of power at least the minimum? (See chart below.)

90 Power – Minimum Limit for Test

VEHICLE	ALTITUDE		
	0 TO 2,000 FT	2,000 TO 4,000 FT	ABOVE 4,000 FT
M809	75%	66%	60%

YES

- Proceed to next desired test.

NO

- Does vehicle have a fuel/water separator?

NO

- Proceed to Governor/Power Test Fault Isolation, NG90.

NG90

YES

- Service fuel/water separator (para. 3-26).
- Repeat Power Test.
- If Power Test still fails, proceed to Governor/Power Test Fault Isolation, NG90.

NG90

Table 2-10. STE/ICE Go-Chain Tests (Contd).

NOTE

Test G01, VTM Connections and Checkout, must be performed before running STE/ICE tests.

G08 IDLE SPEED/GOVERNOR CHECK — TK MODE

1 CHECK ENGINE AT IDLE SPEED:

- Dial 10 into TEST SELECT and press TEST.
- Start engine (TM 9-2320-260-10).
- Watch VTM readout display for about 10 seconds to verify that idle speed remains within tolerance.

TEST NO.	TEST
10	ENGINE RPM (AVERAGE)

VEHICLE	IDLE SPEED
M809	550-600 RPM

- Is engine idle speed within limits?

YES — NO

- Adjust accelerator control linkage (para. 3-37).

- Proceed to G09.

G09

Table 2-10. STE/ICE Go-Chain Tests (Contd).

NOTE

Test G01, VTM Connections and Checkout, must be performed before running STE/ICE tests.

G09 COMPRESSION UNBALANCE TEST — TK MODE

CAUTION

Do not perform more than two compression unbalance tests in a row, or vehicle batteries may be discharged. Engine must be at normal operating temperature before performing compression unbalance test.

TEST NO.	TEST
14	COMPRESSION UNBALANCE

NOTE

The compression unbalance test takes approximately 15 seconds to run.

RUN COMPRESSION UNBALANCE TEST:

- Install pulse tachometer (TK Item 34) with transducer cable W4 (see G03).
- Shut off fuel supply so that engine will not start.
- Dial 14 into TEST SELECT and press TEST.
- Wait for prompting message GO to appear.

- When GO appears, crank engine.
- Just after starting to crank, VTM display should change to four dashes, indicating VTM is accepting data.
- Stop cranking when VTM displays OFF or E013.
- Wait for a number to be displayed.

PROMPTING MESSAGE: GO / OFF

- Does VTM display a number?

YES → Proceed to next page.

NO → Does VTM display GO?

NO → Does VTM display FAIL?

YES → Rerun compression unbalance test. If unbalance is still out of limits, notify your supervisor.

NO → VTM displays E013. This may indicate discharged batteries or low cranking speed. Also, the operator may have stopped cranking during test. Correct problem and repeat test.

YES → Proceed to next page.

Table 2-10. STE/ICE Go-Chain Tests (Contd).

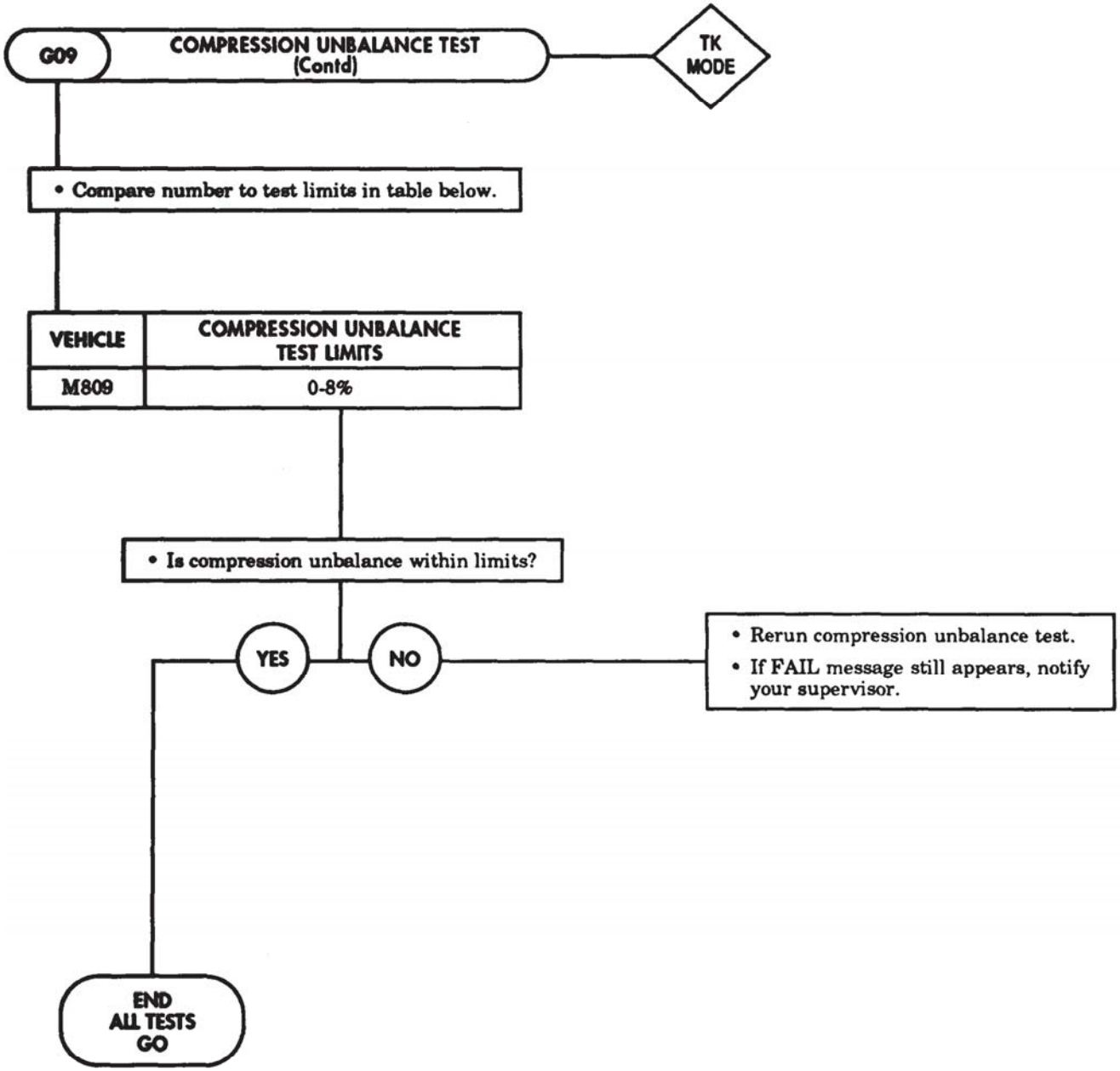

Table 2-11. STE/ICE No-Go Chain Tests.

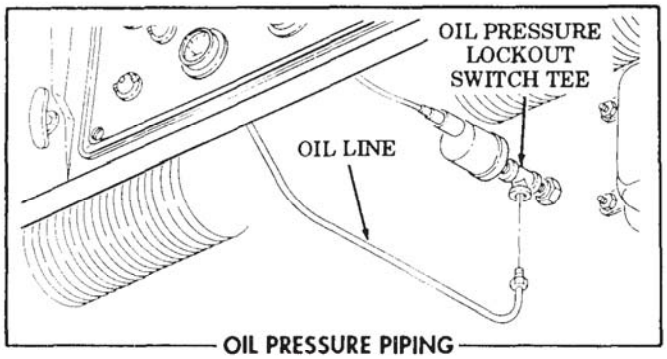

OIL PRESSURE PIPING

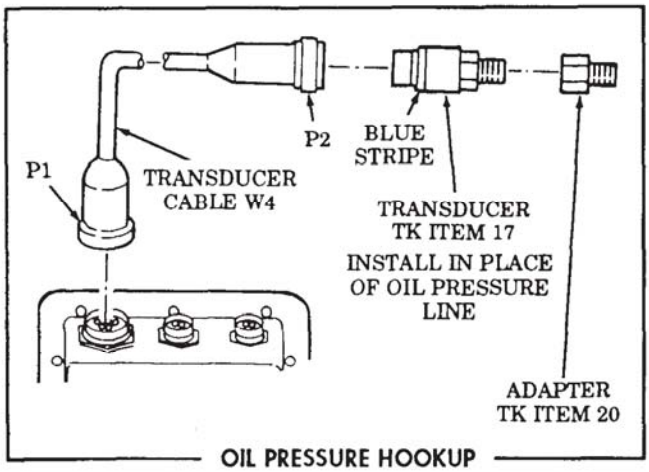

OIL PRESSURE HOOKUP

NOTE

Test G01, VTM Connections and Checkout, must be performed before running STE/ICE tests.

NG05 — **LOW OIL PRESSURE** — TK MODE

1 INSTALL TRANSDUCER – DO OFFSET:

- Stop vehicle engine.
- Disconnect oil line from oil pressure lockout switch tee.
- Install adapter, TK Item 20 and pressure transducer, TK Item 17 (blue stripe).
- Connect P1 of transducer cable W4 to J2 on VTM.
- Connect P2 of transducer cable to the connector on pressure transducer.
- Install pulse tachometer.
- Connect P1 of W4 cable to VTM J3.
- Connect P2 of W4 cable to pulse tachometer.

TEST NO.	TEST
01	INTERLEAVE
50	0-1000 PSIG PRESSURE

- Dial 50 into TEST SELECT.
- Press and hold TEST until CAL message appears on display.
- Release TEST.
- Wait for offset value to appear on display.

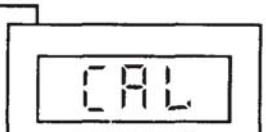

PROMPTING MESSAGE

- Is offset value within limits of -150 to +150?

YES — NO

- Proceed to TM 9-4910-571-12&P for offset fault isolation.

- Proceed to step 2. — **2**

Table 2-11. STE/ICE No-Go Chain Tests (Contd).

NG05 — **LOW OIL PRESSURE CHECK (Contd)** — **TK MODE**

2 CHECK OIL PRESSURE:

- Connect pulse tachometer and second W4 cable.
- Dial 01 into TEST SELECT and press TEST.
- When PASS appears, dial 50 into TEST SELECT and press TEST. VTM will now display RPM and oil pressure alternately.
- Start vehicle engine and hold RPM at speed indicated in table below.
- Check the VTM display for correct oil pressure.

PASS — PROMPTING MESSAGE

- Is oil pressure within limits?

VEHICLE	NORMAL OIL PRESSURE AND MAXIMUM RPM
M809	45-70 PSI @ 2200 RPM

NO — **YES**

- Proceed to Gage Test, NG31.

NG31

- Stop the engine immediately.
- Refer to vehicle LO 9-2320-260-12 to check oil type and replace oil filters.
- If reading is still bad, notify your supervisor.

NOTE

After completing repair, rerun the Go-Chain tests to verify that the problem is fixed and no other problems exist.

Table 2-11. STE/ICE No-Go Chain Tests (Contd).

NOTE

Test G01, VTM Connections and Checkout, must be performed before running STE/ICE tests.

NG20 — **NO CRANK – NO START** → **TK MODE**

1 TRY TO CRANK ENGINE:

- Set vehicle controls to crank engine.
- Activate starter switch and listen to starter motor.

- Does starter motor sound like it is running overspeed?

YES

- Proceed to step 2.

NO

- Sound is buzz, hum, click, etc., or there is no sound. Proceed to Starter Circuit Tests, NG80.

NG80

2 CHECK TEETH ON FLYWHEEL:

- Remove starter motor (para. 4-5).
- Check for missing and/or damaged teeth on flywheel.

- Are all teeth good?

NO

- Notify your supervisor.

YES

- Replace starter motor (para. 4-5).

NOTE

After completing repair, rerun Go-Chain tests to verify that the problem is fixed and no other problems exist.

Table 2-11. STE/ICE No-Go Chain Tests (Contd).

NOTE

Test G01, VTM Connections and Checkout, must be performed before running STE/ICE tests.

NG30 — **ENGINE CRANK – NO START** → **TK MODE**

1 CHECK CRANKING SPEED:

- Shut off fuel.
- Dial 10 into TEST SELECT and press TEST.
- Crank engine and watch readout display.
- Compare result with minimum cranking speed as listed in table below.

VEHICLE	MINIMUM CRANKING SPEED
M809	100 RPM

TEST NO.	TEST
10	ENGINE RPM (AVERAGE)

- Is cranking speed OK?

YES

- Proceed to step 2.

2

NO

- Proceed to Starter Circuit Tests, NG80.

NG80

Table 2-11. STE/ICE No-Go Chain Tests (Contd).

NG30 — **ENGINE CRANK – NO START (Contd)** — **TK MODE**

2 CHECK FUEL SUPPLY:

- Verify that there is fuel in the tank.
- If fuel filters have been changed or fuel tank has been run dry, bleed air out of fuel system as necessary (TM 9-2320-260-10).
- Drain any water from fuel/water separator. Continue to drain until fuel appears.
- Check for kinked, flattened, or broken fuel lines from tank to filters and engine. If equipped with quick-disconnect fittings, check for blockage in fittings.
- Check fuel shutoff solenoid and circuitry (see Electrical Troubleshooting, malfunction 4).
- Check emergency stop cable operation.

CAUTION

Before opening fuel line, ensure area around fuel line is clean.

CAUTION

Operation of engine with red transducer installed could damage transducer. During this test be prepared to shut off fuel immediately if engine starts. Remove transducer before attempting to start engine.

- Proceed to step 3.

3

Table 2-11. STE/ICE No-Go Chain Tests (Contd).

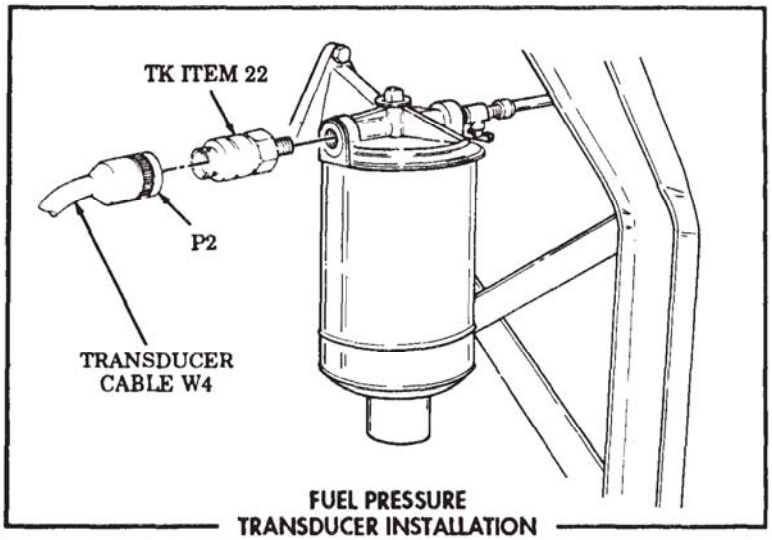

FUEL PRESSURE
TRANSDUCER INSTALLATION
STEP 3

NG30 ENGINE CRANK – NO START (Contd)

TK MODE

3 INSTALL TRANSDUCER:

- Install pressure transducer (red stripe) in outlet side of fuel/water separator.
- Connect P1 of transducer cable W4 to J2 on VTM.
- Connect P2 of transducer cable to connector on transducer.

TEST NO.	TEST
49	0-25 PSIG PRESSURE

- Dial 49 into TEST SELECT.
- Press and hold TEST until CAL message appears on display.
- Release TEST.
- Wait for offset value to appear on display.

CAL

PROMPTING MESSAGE

- Is offset value within range of -4 to +4?

YES

- Proceed to step 4.

4

NO

- Proceed to TM 9-4910-571-12&P for offset fault isolation.

Table 2-11. STE/ICE No-Go Chain Tests (Contd).

NG30 — **ENGINE CRANK – NO START (Contd)** — **TK MODE**

CAUTION

Remove transducer before attempting to start engine.

4 MEASURE FUEL PRESSURE DURING ENGINE CRANK:

- Turn on fuel and accessory switch.
- Press TEST.
- Pull emergency stop cable out.
- Crank engine and watch readout display.
- Compare number on display with fuel pressure specification in table below.

NOTE

If ambient temperature is less than 40°F, fuel pressure may be less than 2 psi.

VEHICLE	MINIMUM FUEL PRESSURE
M809	-1.5 PSI

- Is fuel pressure greater than limit shown?

NO — **YES** — • Notify your supervisor.

- Check for bent, broken, clogged, and kinked fuel lines. Replace if damaged, TM 9-243.
- Replace fuel/water separator element (para. 3-26).
- If engine still does not start, notify your supervisor.

NOTE

After completing repair, rerun the Go-Chain tests to verify that the problem is fixed and no other problems exist.

Table 2-11. STE/ICE No-Go Chain Tests (Contd).

NOTE

Test G01, VTM Connections and Checkout, must be performed before running STE/ICE tests.

NG31 GAGE TEST — TK MODE

1 INSTALL TEST PROBE CABLE:

- Connect P1 of test probe cable W2 to J4 on VTM.
- Touch red and black leads together.

2 DO TEST PROBE CABLE OFFSET:

- Dial 89 into TEST SELECT.
- Press and hold TEST until CAL message appears on display.
- Release TEST.
- Wait for offset value to appear on display.

CAL — PROMPTING MESSAGE

- Is offset value within limits of -6.8 to +6.8?

YES — NO

- Proceed to TM 9-4910-571-12&P for offset fault isolation.

TEST NO.	TEST
89	0-45 VOLTS DC

- Proceed to step 3.

3

Table 2-11. STE/ICE No-Go Chain Tests (Contd).

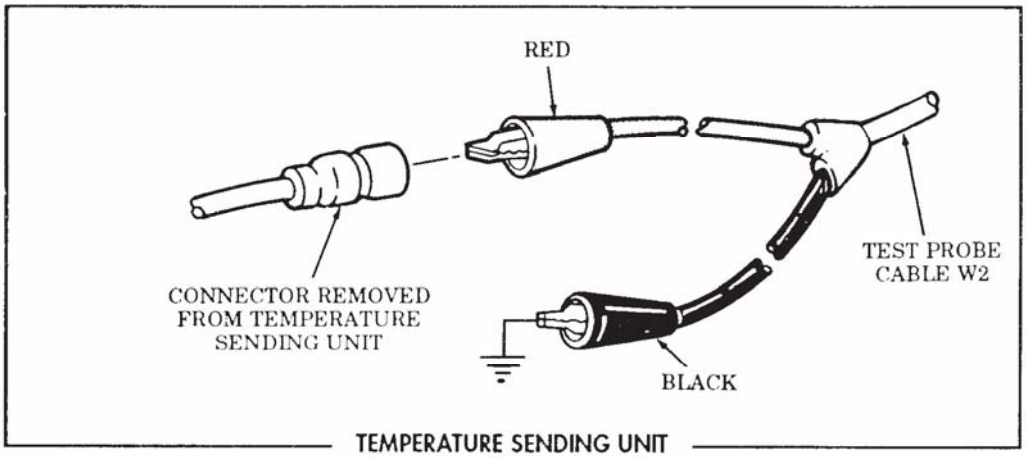

TEMPERATURE SENDING UNIT FAULT ISOLATION

NG31 GAGE TEST (Contd) → TK MODE

3 ISOLATE FAULT TO SENDING UNIT OR GAGE:

- Remove wire from sending unit on vehicle.
- Connect red clip lead of W2 to wire removed from sending unit.
- Connect black clip lead to a good ground.
- Press TEST.
- Turn vehicle accessory switch ON.

- Does VTM indicate battery voltage?

YES

- Refer to chapter 4, section III to replace sending unit(s).

NO

- Refer to Troubleshooting Index to check and isolate fault to wiring harness or gage.

NOTE

After completing repair, rerun Go-Chain tests to verify that problem is fixed and no other problems exist.

Table 2-11. STE/ICE No-Go Chain Tests (Contd).

NOTE

Test G01, VTM Connections and Checkout, must be performed before running STE/ICE tests.

NG50 **CHARGING CIRCUIT TESTS** — **TK MODE**

TEST NO.	TEST
90	0-1500 AMPS DC

WARNING

Turn vehicle engine off.

1 INSTALL CURRENT PROBE:

- Install current probe around output wire on alternator/generator.
- Point arrow on probe away from alternator/generator.

NOTE

Current probe should be at least 10 inches (25 cm) from alternator/generator, if possible.

2 DO CURRENT PROBE OFFSET:

- Turn off all vehicle electrical power.
- Dial 90 into TEST SELECT.
- Press and hold TEST until CAL message appears on display.
- Release TEST.
- Wait for offset value to appear on display.

CAL

PROMPTING MESSAGE

- Is offset value within limits of -225 to +225?

YES

- Proceed to step 3.

NO

- Proceed to TM 9-4910-571-12&P for offset fault isolation.

3

Table 2-11. STE/ICE No-Go Chain Tests (Contd).

NG50 — **CHARGING CIRCUIT TESTS (Contd)** — **TK MODE**

3 CHECK CHARGING SYSTEM OUTPUT CURRENT:

- Dial 03 into TEST SELECT and press TEST.
- Dial 90 into TEST SELECT and press TEST.
- Start vehicle engine (TM 9-2320-260-10), and turn on vehicle lights and other electrical accessories.
- Set engine speed to fast idle (1200 RPM).
- Compare number on display with output current specification in table.

VEHICLE	ALTERNATOR OUTPUT CURRENT
M809	40 AMPS

- Is output current low?

YES

- Shut engine and vehicle accessories off.
- Proceed to next page.

NO

- Output current is greater. Use current probe to locate accessory or wire drawing excessive current.
- If current is going into batteries, check electrolyte level and specific gravity. (Refer to TM 9-6140-200-14).
- Refer to Troubleshooting Index to make necessary repairs.

NOTE

After completing repair, rerun Go-Chain tests to verify that problem is fixed and no other problems exist.

Table 2-11. STE/ICE No-Go Chain Tests (Contd).

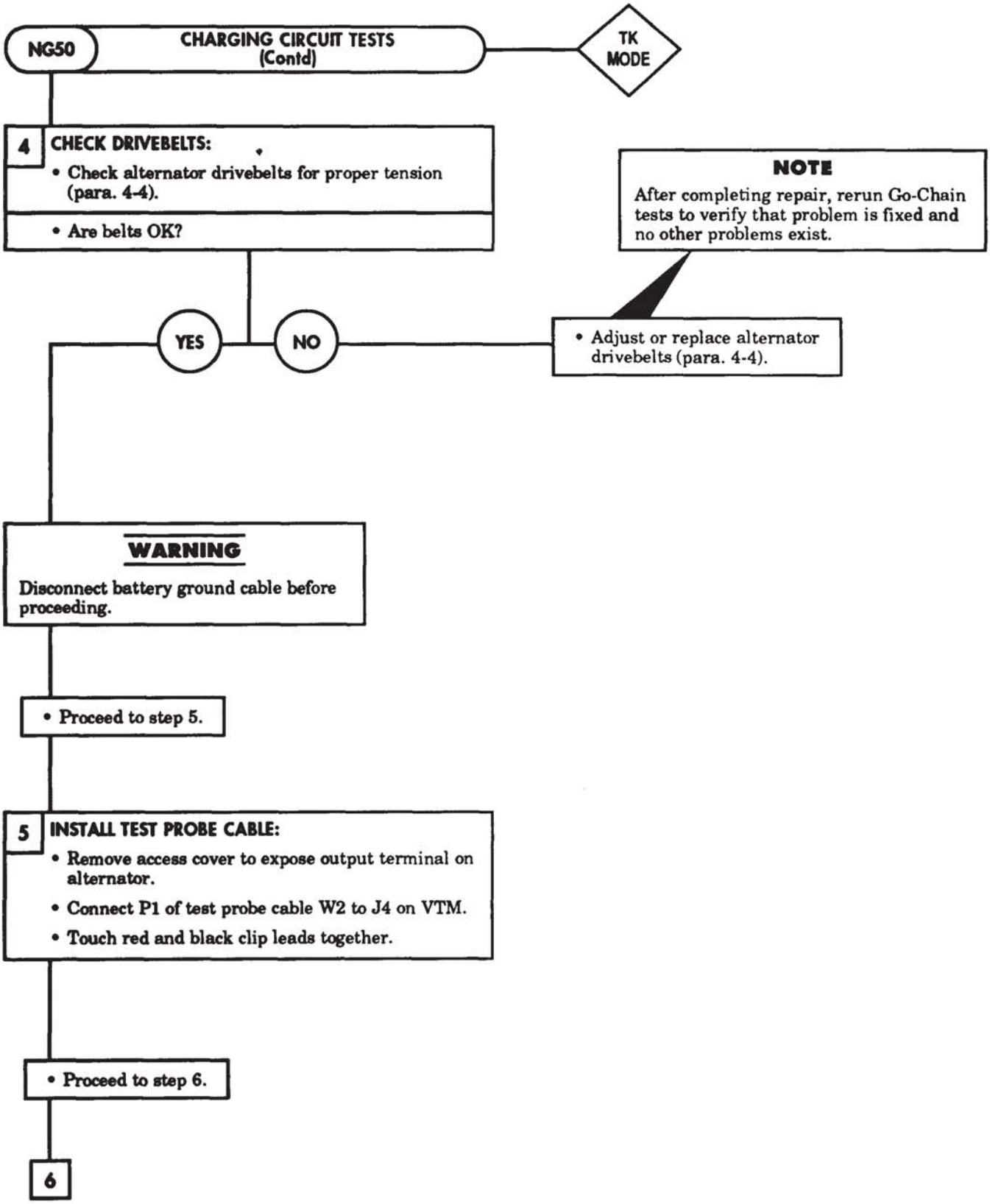

Table 2-11. STE/ICE No-Go Chain Tests (Contd).

NG50 — **CHARGING CIRCUIT TESTS (Contd)** — **TK MODE**

6 DO TEST PROBE CABLE OFFSET:

- Dial 89 into TEST SELECT.
- Press and hold TEST until CAL message appears on display.
- Release TEST.
- Wait for offset value to appear on display.

CAL — PROMPTING MESSAGE

- Is offset value within limits of -6.8 to +6.8?

TEST NO.	TEST
89	0-45 VOLTS DC

YES — NO

- Proceed to TM 9-4910-571-12&P for offset fault isolation.

7 CHECK CHARGING SYSTEM OUTPUT VOLTAGE:

- Connect red clip lead of cable W2 to output terminal of alternator.
- Connect black clip lead to ground.

- Reconnect battery ground cable.
- Start vehicle engine (TM 9-2320-260-10).
- Turn on vehicle lights.
- Set engine speed to fast idle (1200 RPM).

- Press TEST.
- Is output voltage between 26.5 and 29.5 volts?

NO — YES

- Repair bad connections or broken cables in charging circuit (para. 4-52).

NOTE

After completing repair, rerun Go-Chain tests to verify that problem is fixed and no other problems exist.

- Proceed to next page.

Table 2-11. STE/ICE No-Go Chain Tests (Contd).

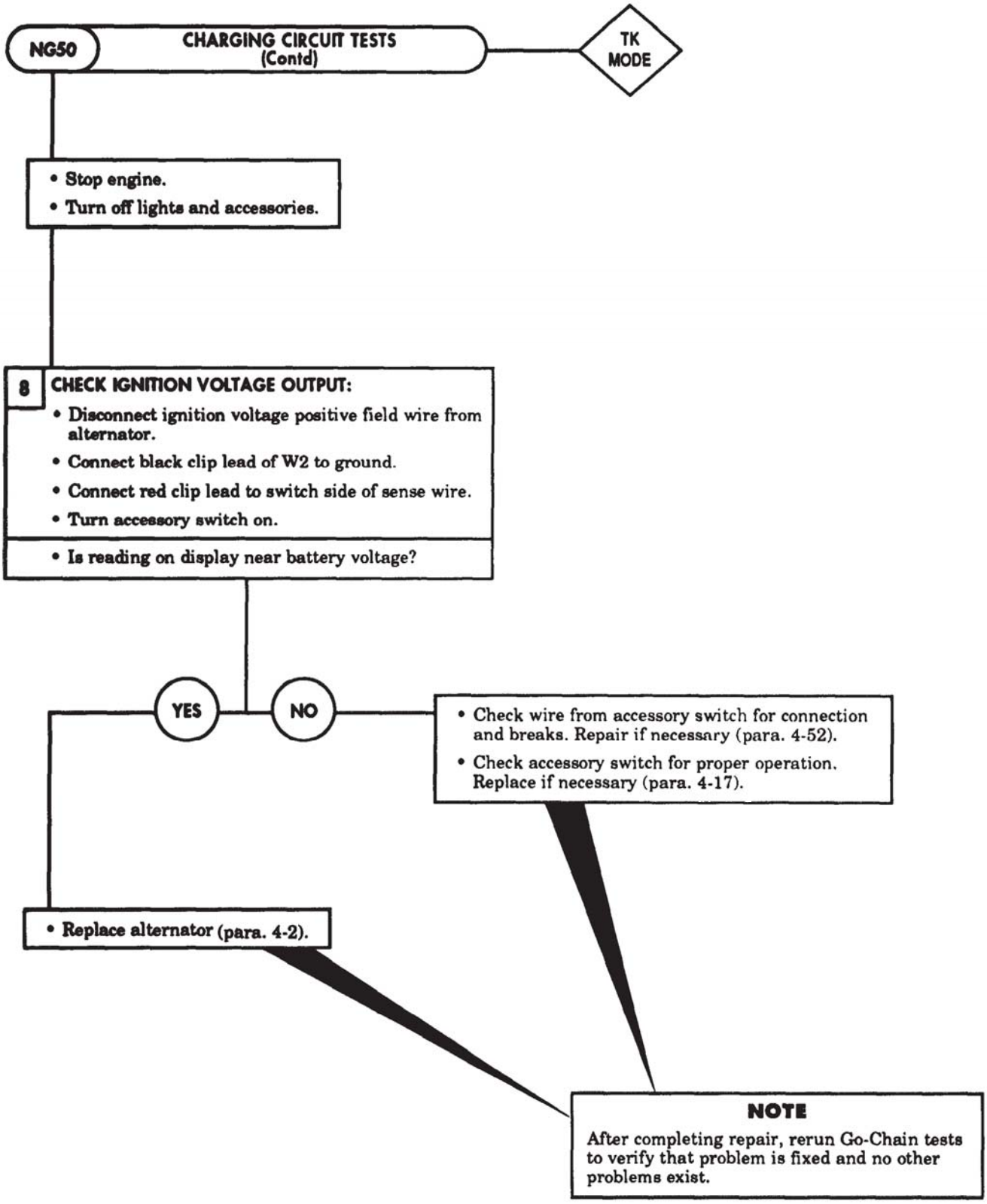

Table 2-11. STE/ICE No-Go Chain Tests (Contd).

NOTE

Test G01, VTM Connections and Checkout, must be performed before running STE/ICE tests.

NG80 **STARTER CIRCUIT TESTS** — **TK MODE**

NOTE

While cranking engine with bad or discharged batteries, it is possible for VTM to lose power and come on again after cranking has stopped, displaying four dashes. If this occurs, clean battery posts and clamps and try again. If VTM still loses power, connect VTM power cable to good batteries in another vehicle and perform following tests using test probe cable W2.

STARTER CIRCUIT TEST

Test 72. current first peak 800 to 1750 amps
Test 74. starter circuit resistance 5 to 30 milliohms
Test 89. starter motor positive cable voltage drop. 0.4 volts max.
Test 89. starter motor negative cable voltage drop, 0.2 volts max.
Test 90. average cranking current 5 to 30 milliohms

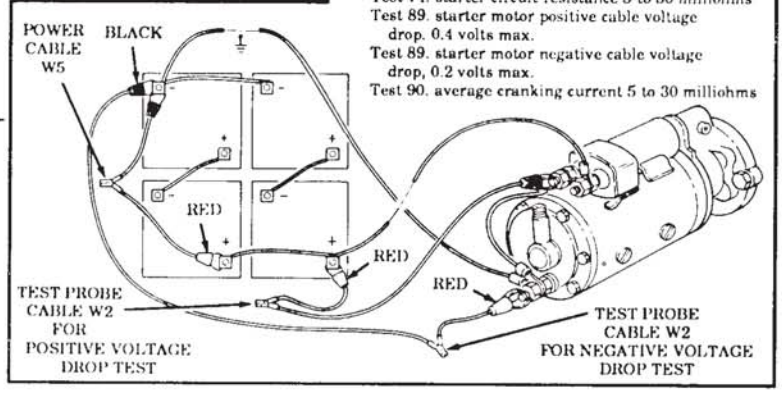

1 DO CURRENT PROBE OFFSET:

- Connect cable W5 to batteries.
- Turn off all vehicle electrical power.
- Dial 74 into TEST SELECT.
- Press and hold TEST until CAL message appears on display.
- Release TEST.
- Wait for offset value to appear.

CAL — PROMPTING MESSAGE

- Is offset value within limits of -225 to +225?

TEST NO.	TEST
74	STARTER CIRCUIT RESISTANCE

YES — NO

- Proceed to TM 9-4910-571-12&P for offset fault isolation.

2 CHECK STARTER CIRCUIT RESISTANCE:

- Pull emergency stop cable out.
- Press TEST.
- When GO appears, attempt to crank engine.
- Stop cranking engine when VTM displays OFF or an error message.

GO

OFF

PROMPTING MESSAGE

- Is a number displayed?

- Proceed to next page.

Table 2-11. STE/ICE No-Go Chain Tests (Contd).

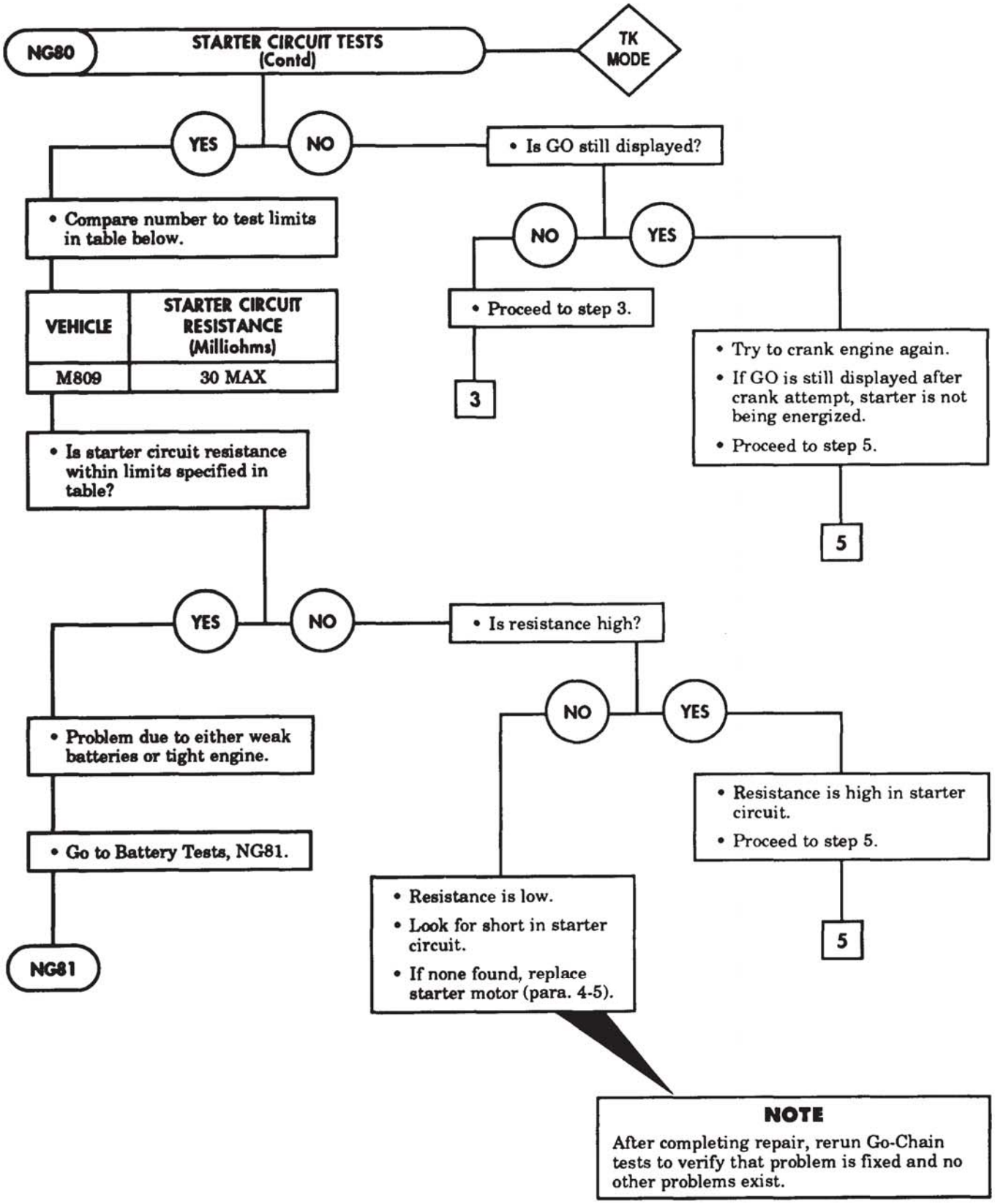

Table 2-11. STE/ICE No-Go Chain Tests (Contd).

NG80 — **STARTER CIRCUIT TESTS (Contd)** — **TK MODE**

3 DO CURRENT PROBE OFFSET:

- Connect cable W5 to batteries.
- Turn off all vehicle electrical power.
- Dial 74 into TEST SELECT.
- Press and hold TEST until CAL message appears on display.
- Release TEST.
- Wait for offset value to appear.

CAL — PROMPTING MESSAGE

- Is offset value within limits of -225 to +225?

YES / NO

- Proceed to TM 9-4910-571-12&P for offset fault isolation.

4 CHECK STARTER CURRENT:

- Dial 90 into TEST SELECT and press TEST.
- Crank engine for a few seconds with fuel off.
- Is starter current above 100 amps?

TEST NO.	TEST
90	0-1500 AMPS DC

NO / YES

- Proceed to Battery Tests, NG81.

NG81

- Error message E013, displayed in step 2, indicates short circuit, frozen starter, or tight engine.
- Check wiring to starter for short circuits. Repair as necessary (para. 4-52).
- If wiring is OK, proceed to Engine Tightness Test, NG130.

NG130

NOTE

After completing repair, rerun Go-Chain tests to verify that problem is fixed and no other problems exist.

Table 2-11. STE/ICE No-Go Chain Tests (Contd).

NG80 — **STARTER CIRCUIT TESTS (Contd)** — **TK MODE**

5 CHECK STARTER SOLENOID:
- Attempt to start engine while listening for clicks of starter solenoid.
- Does starter solenoid click?

YES → 6
NO → Check switches, wiring, and relays to starter solenoid. If these are OK, replace starter motor (para. 4-5).

6 INSTALL TEST PROBE CABLE:
- Connect P1 of test probe cable W2 to J4 on VTM.
- Touch red and black clip leads together.

7 DO TEST PROBE CABLE OFFSET:
- Dial 89 into TEST SELECT.
- Press and hold TEST until CAL message appears on display.
- Release TEST.
- Wait for offset value to appear on display.
- Is offset value within limits of -6.8 to +6.8?

CAL — PROMPTING MESSAGE

NOTE
After repair, rerun Go-Chain tests to verify that problem is fixed and no other problems exist.

YES → 8
NO → Proceed to TM 9-4910-571-12&P for offset fault isolation.

8 CHECK STARTER VOLTAGE:
- Connect black clip lead of test probe cable to negative battery terminal.
- Connect red clip lead test probe cable to positive terminal of starter motor.
- Press TEST.
- Crank engine and observe displayed voltage.
- Is starter voltage above 17 volts?

TEST NO.	TEST
67	BATTERY VOLTAGE
89	0-45 VOLTS DC

YES → Proceed to step 9. → 9
NO → Proceed to step 10. → 10

Table 2-11. STE/ICE No-Go Chain Tests (Contd).

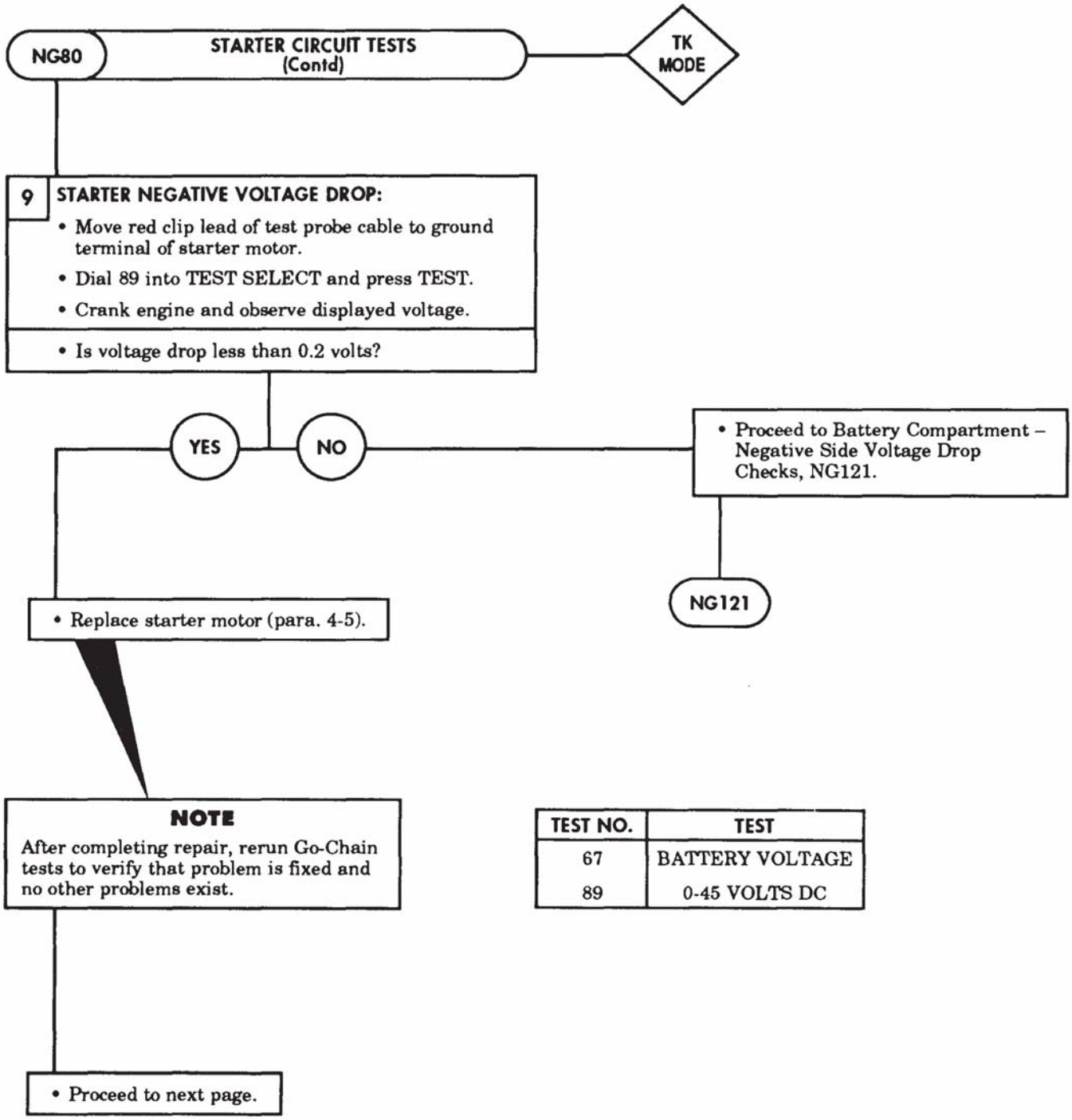

TEST NO.	TEST
67	BATTERY VOLTAGE
89	0-45 VOLTS DC

Table 2-11. STE/ICE No-Go Chain Tests (Contd).

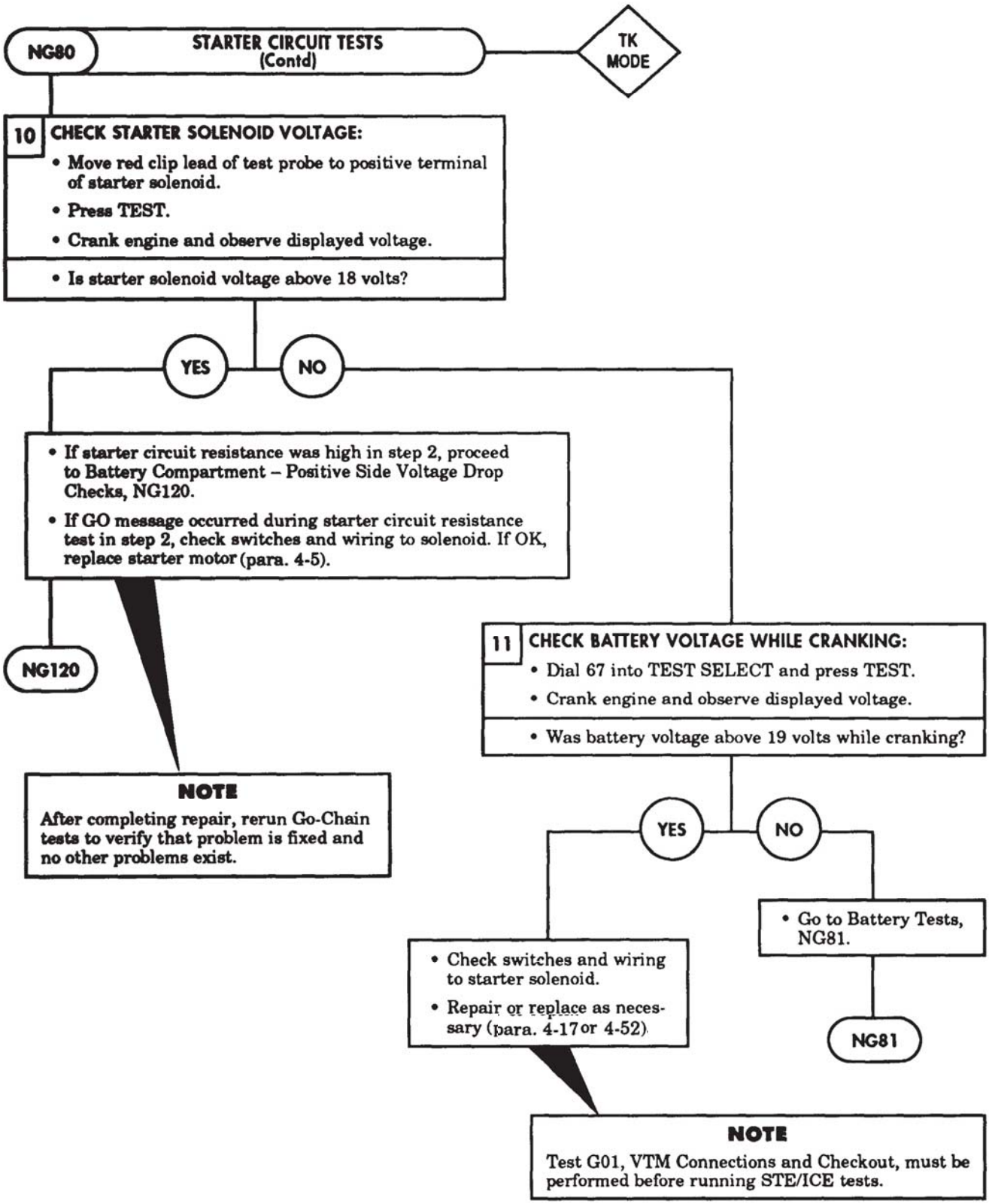

Table 2-11. STE/ICE No-Go Chain Tests (Contd).

NOTE

Test G01, VTM Connections and Checkout, must be performed before running STE/ICE tests.

NG81 **BATTERY TESTS** — **TK MODE**

NOTE

Each battery is best tested individually. During this test, fuel supply must be shut off to keep engine from starting.

TEST NO.	TEST
77	BATTERY RESISTANCE
79	BATTERY RESISTANCE CHANGE
89	0-45 VOLTS DC
90	0-1500 AMPS DC

1 INSTALL TEST PROBE CABLE W2 – DO OFFSET TEST:

- Connect test probe cable W2 to J4 on VTM.
- Touch red and black clip leads of W2 together.
- Dial 89 into TEST SELECT.
- Press and hold TEST until CAL message appears on display.
- Release TEST.
- Wait for offset value to appear on display.

CAL

PROMPTING MESSAGE

- Is offset value within limits of -6.8 to +6.8?

YES — NO

- Proceed to TM 9-4910-571-12&P for offset fault isolation.

- Connect red clip lead of cable W2 to positive post of battery being tested.
- Connect black clip lead of cable W2 to negative post of battery being tested.

NOTE

See following page for note and hookup diagram.

2 CONDITION CURRENT PROBE – DO OFFSET:

- Clamp current probe around battery cable which connects series pair of batteries containing battery to be tested.
- Point arrow on current probe toward the negative post as shown.
- Press TEST.
- Attempt to crank engine for several cycles.

- Is number displayed greater than 9.6 volts?

YES — NO

- Proceed to next page.

- Check battery electrolyte level.
- Clean battery terminals.
- Refer to Troubleshooting Index to check battery specific gravity.
- Charge battery, if necessary.
- Retest.
- If 9.6 volts or greater, go to step 3. If less, replace battery (para. 4-49).

Table 2-11. STE/ICE No-Go Chain Tests (Contd).

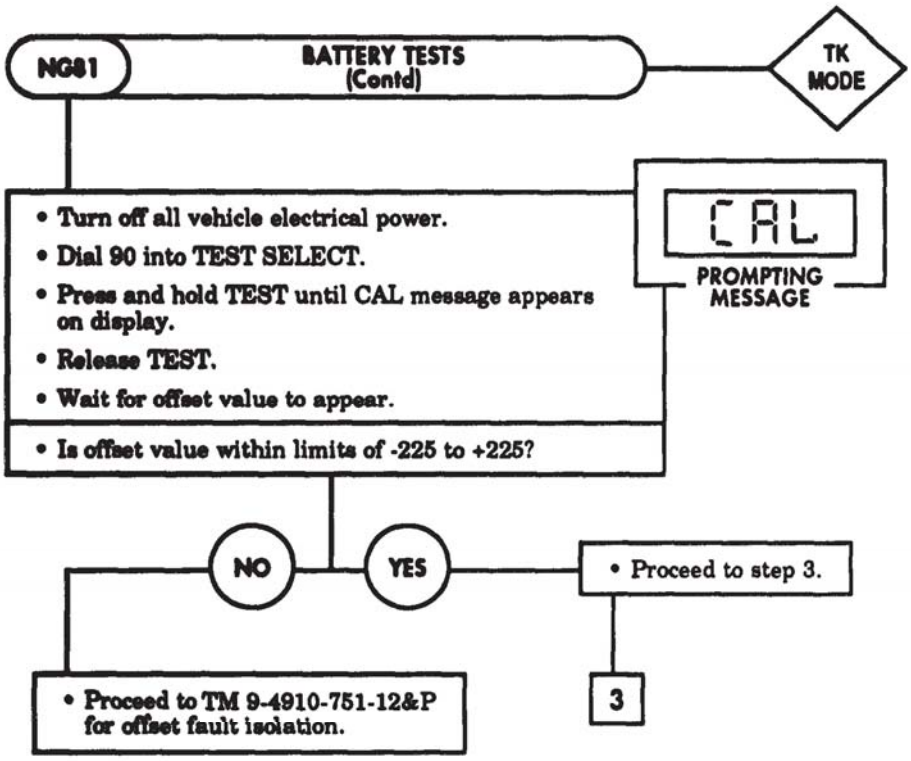

TEST PROCEDURE:

1. Test each battery of a series pair, then proceed to batteries of next series pair.
2. To find series pairs of batteries, find pairs for which the negative terminal of one battery is connected by a cable to the positive terminal of another battery. This makes the two batteries a series pair. For example, in figure below, batteries A and B are a series pair, and batteries C and D are also a series pair.
3. To test battery A or B, clamp current probe around cable connecting battery A and battery B. Point arrow on current probe in direction of negative post connected to the cable.
4. The test probe cable W2 is first connected to battery A for testing battery A.
5. The test probe cable W2 is then connected to battery B for testing battery B. (Current probe in same place as for testing battery A).
6. To test battery C or D, clamp current probe around cable connecting battery C and battery D. Point arrow on current probe in direction of negative post connected to cable.
7. Connect test probe cable W2 to battery C to test battery C.
8. Connect test probe cable W2 to battery D to test battery D.

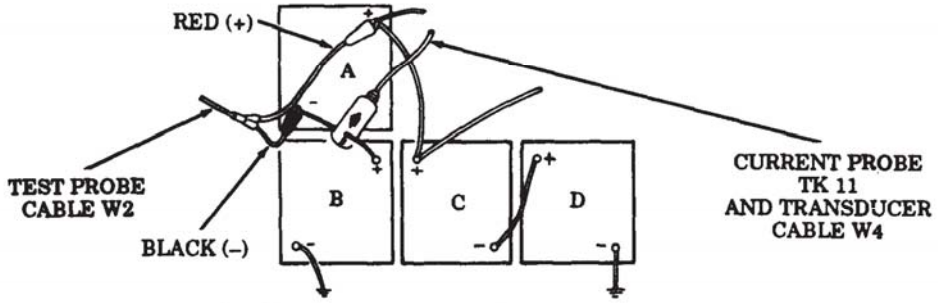

Table 2-11. STE/ICE No-Go Chain Tests (Contd).

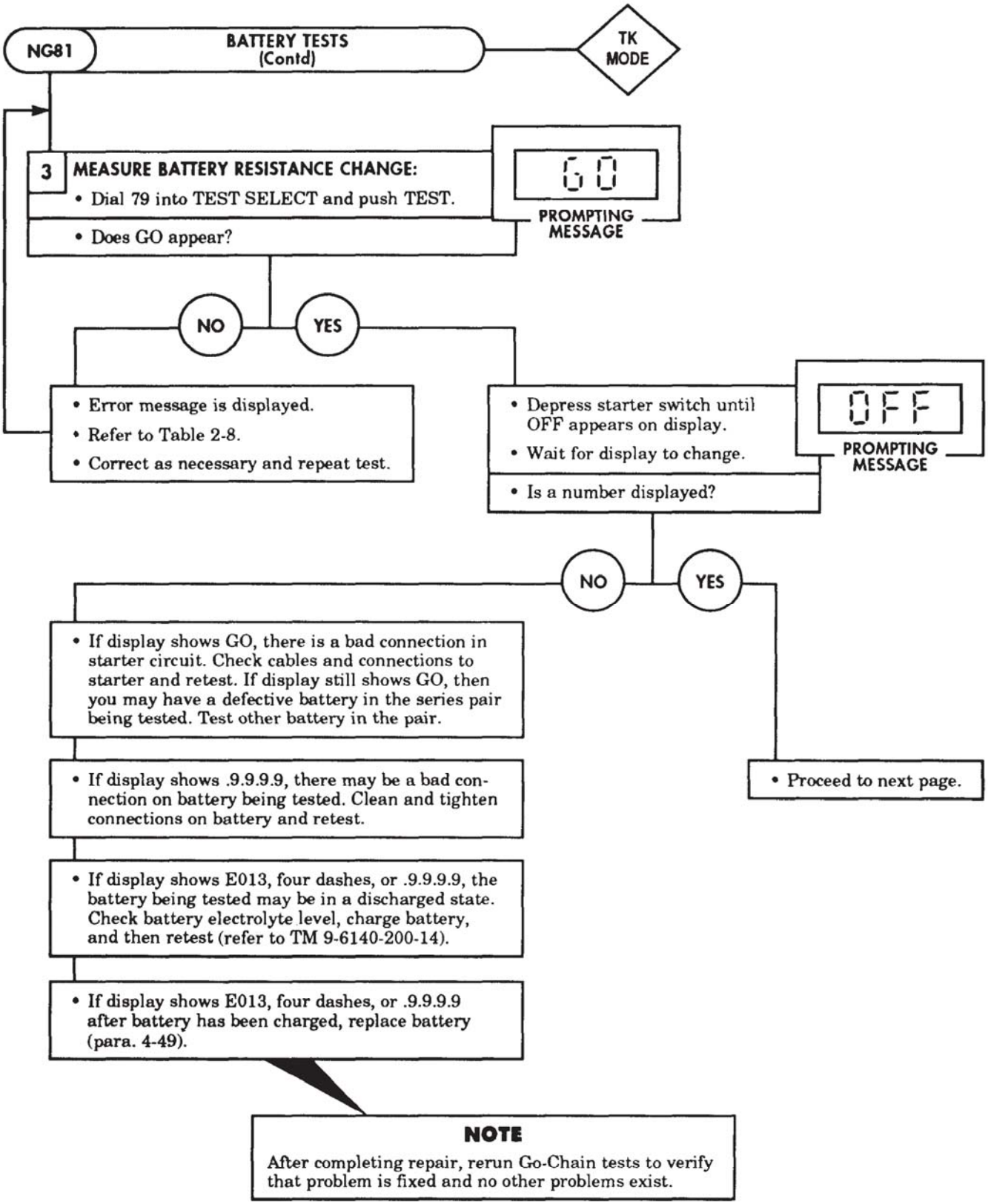

Table 2-11. STE/ICE No-Go Chain Tests (Contd).

NG81 — **BATTERY TESTS (Contd)** — **TK MODE**

- Compare reading with resistance change given below.

VEHICLE	MAXIMUM RESISTANCE CHANGE
M809	25 MILLIOHMS/SECOND

- Is battery resistance less than above limit?

YES → **4 MEASURE BATTERY RESISTANCE:**

- Dial 77 into TEST SELECT and push TEST.
- If GO appears, depress starter switch until OFF appears on VTM display.
- If error message appears, refer to Table 2-8 and correct as necessary. Repeat test.

PROMPTING MESSAGE: GO → OFF

VEHICLE	MAXIMUM RESISTANCE CHANGE
M809	25 MILLIOHMS

- Is battery resistance less than above limit?

YES

- Battery is OK. Perform test on next battery.
- If engine is tight, notify your supervisor.

NO

- Check battery electrolyte level.
- Clean battery terminals.
- Refer to Electrical Troubleshooting, Table 2-5, malfunction 1, to check battery specific gravity.
- Charge battery, if necessary.

NOTE

If battery fails in freezing weather, crank engine for 5 seconds and retest. This will warm battery slightly.

NO

- Check battery electrolyte level.
- Clean battery terminals.
- Refer to Electrical Troubleshooting, Table 2-5, malfunction 1, to check battery specific gravity.
- Charge battery, if necessary.
- Repeat test on this battery.

NOTE

If battery fails in freezing weather, crank engine for 5 seconds and retest. This will warm battery slightly.

- If battery has been charged and battery resistance change is greater than the limit, replace battery (para. 4-49).

NOTE

After completing repair, rerun Go-Chain tests to verify that problem is fixed and no other problems exist.

Table 2-11. STE/ICE No-Go Chain Tests (Contd).

NOTE

Test G01, VTM Connections and Checkout, must be performed before running STE/ICE tests.

NG90 GOVERNOR/POWER TEST FAULT ISOLATION — **TK MODE**

NOTE

If vehicle has failed power test, start with step 1. If vehicle has failed governor checks, start with step 2 on next page.

CAUTION

Check that air inlet is clear of tools, debris, dirt, and dust before performing following test.

1 REMOVE AIR CLEANER – REPEAT POWER TEST:

- Remove air cleaner element from air intake housing (para. 3-15).
- Repeat power test – G07, step 2.

- Does engine pass power test with air cleaner removed?

NO

- Reinstall air cleaner element (para. 3-15).

CAUTION

Do not perform more than 2 compression unbalance tests in a row to prevent discharge of vehicle batteries.

Engine must be at normal operating temperature before performing compression unbalance test.

NOTE

The compression unbalance test takes approximately 15 seconds to run.

- Proceed to next page.

YES

- Install new air filter element (para. 3-15).

NOTE

After completing repair, rerun Go-Chain tests to verify that problem is fixed and no other problems exist.

Table 2-11. STE/ICE No-Go Chain Tests (Contd).

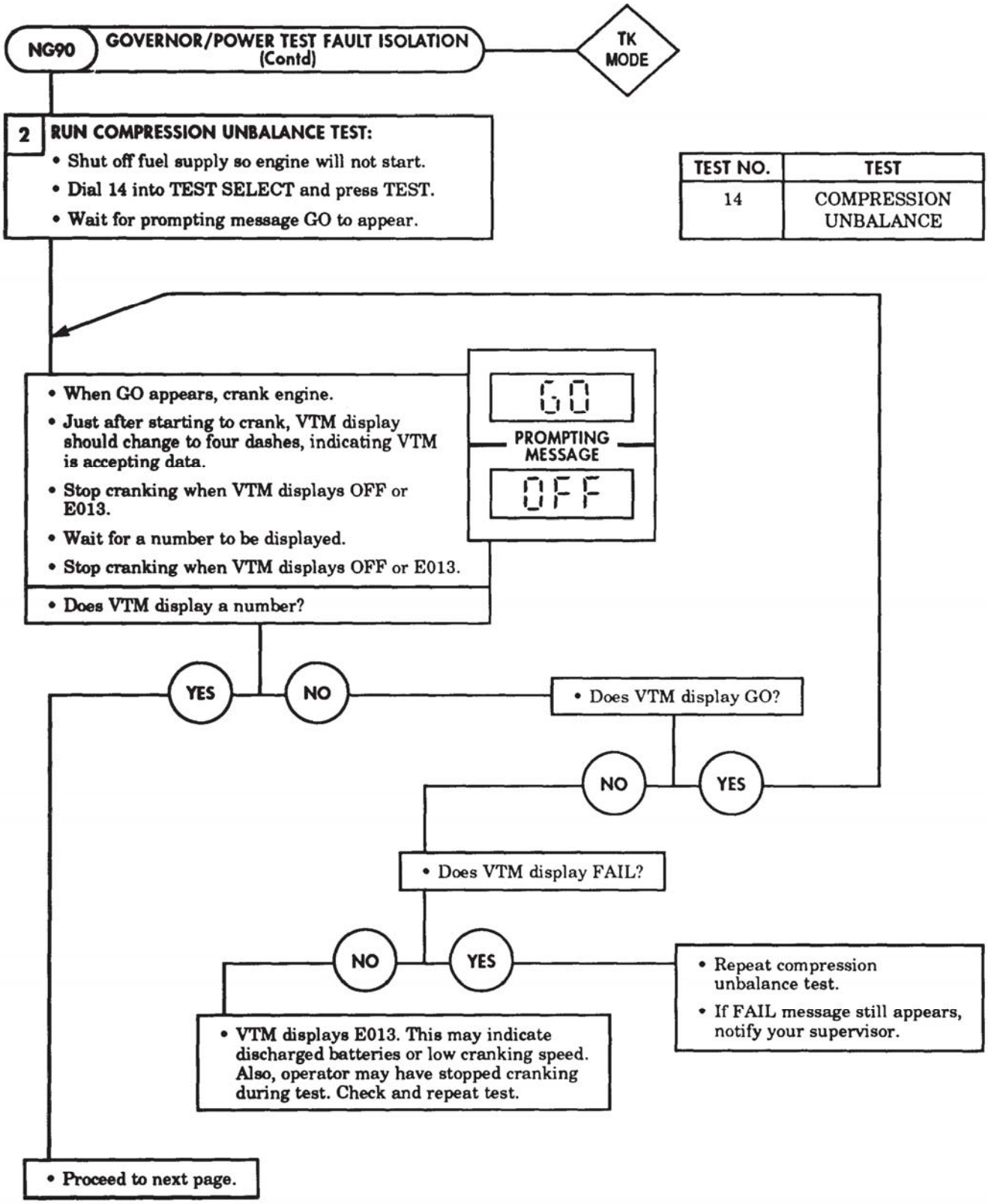

Table 2-11. STE/ICE No-Go Chain Tests (Contd).

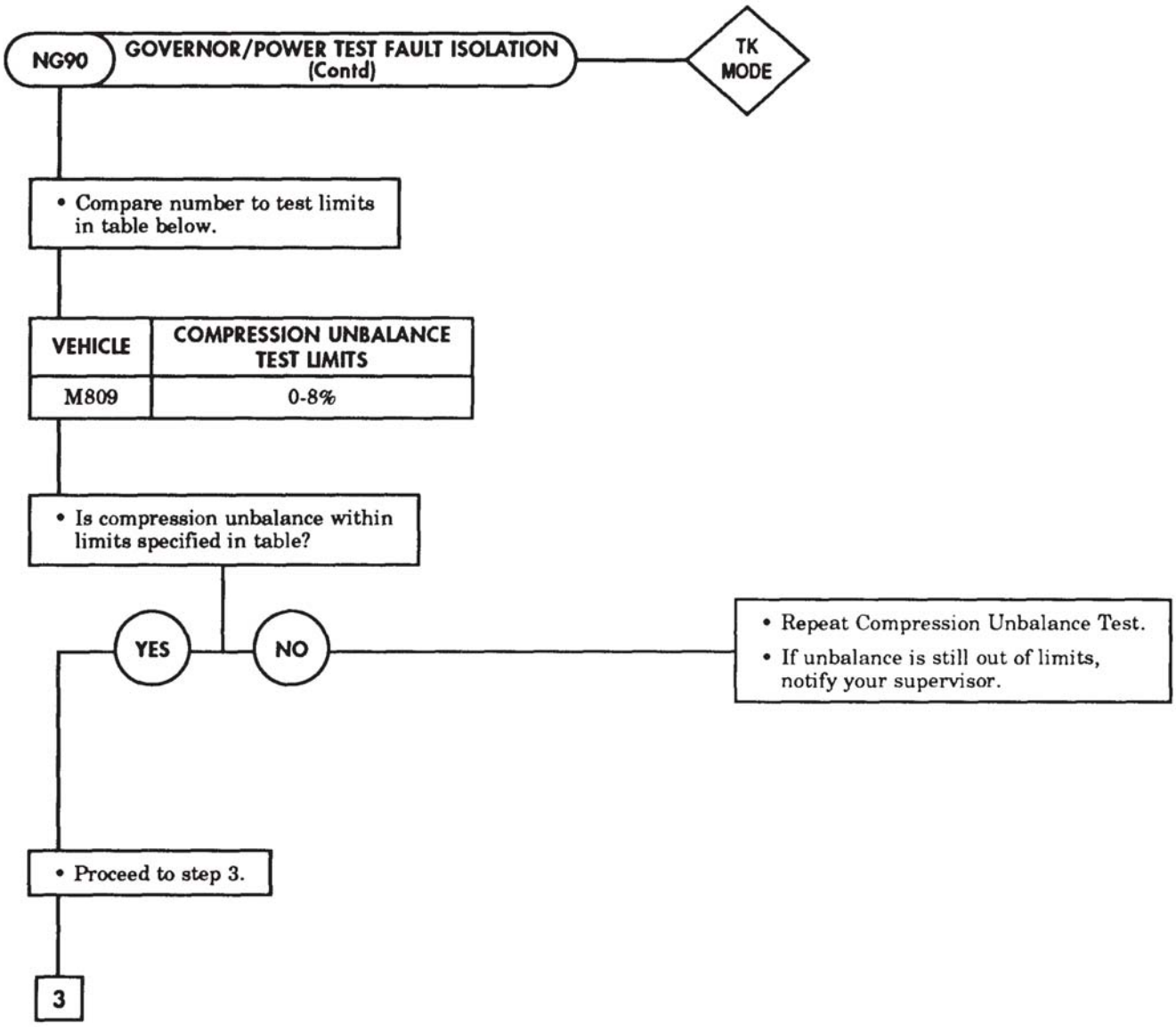

Table 2-11. STE/ICE No-Go Chain Tests (Contd).

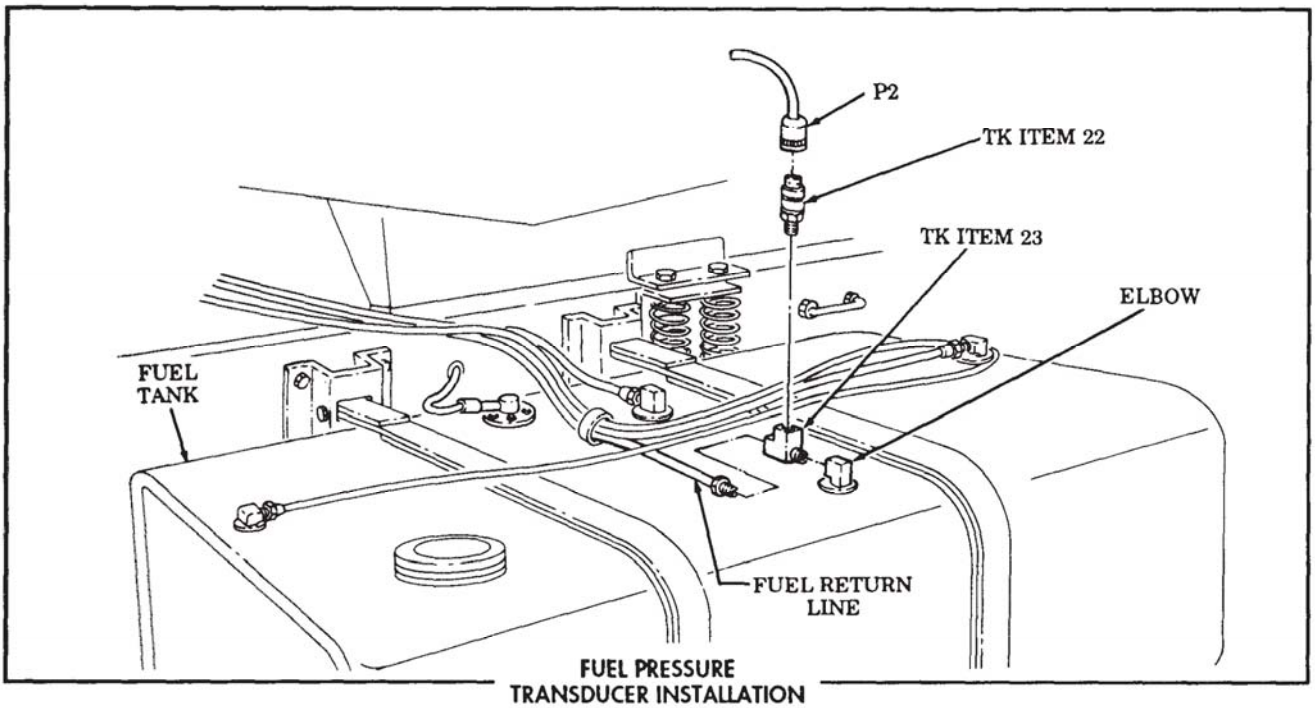

FUEL PRESSURE TRANSDUCER INSTALLATION

NG90 GOVERNOR/POWER TEST FAULT ISOLATION (Contd)

TK MODE

3 INSTALL TRANSDUCER:

- Disconnect fuel return line from elbow on fuel tank.
- Install elbow, TK Item 23, on elbow.
- Install fuel return line on elbow, TK Item 23.
- Install pressure transducer TK Item 22 (Red Stripe) on elbow, TK Item 23.
- Connect P1 of transducer cable W4 to J2 on VTM.
- Connect P2 of transducer cable to connector on transducer.

- Dial 49 into TEST SELECT.
- Press and hold TEST until CAL message appears on display.
- Release TEST.
- Wait for offset value to appear on display.

CAL

PROMPTING MESSAGE

- Proceed to next page.

TEST NO.	TEST
49	0-25 PSIG PRESSURE

Table 2-11. STE/ICE No-Go Chain Tests (Contd).

NG90 GOVERNOR/POWER TEST FAULT ISOLATION (Contd)

TK MODE

- Is offset value within range of -150 to +150?

YES — NO

- Proceed to TM 9-4910-571-12&P for offset fault isolation.

4 **MEASURE FUEL PRESSURE AT HIGH IDLE:**

- Press TEST.
- Start engine (TM 9-2320-260-10) and watch display.
- Accelerate engine and hold at high idle (1000-1800 RPM).
- Compare number on display with fuel pressure values in table below.

TEST NO.	TEST
49	0-25 PSIG PRESSURE

VEHICLE	FUEL PRESSURE
M809	-1.5 PSI

- Is fuel within range?

NO — YES

- Proceed to step 5.

5

- Check for crimped or broken lines.
- Replace fuel/water separator element (para. 3-26).
- Check vehicle accelerator linkage for full travel and proper adjustment. Replace or adjust if necessary (para. 3-37).
- If reading is still low, notify your supervisor.

NOTE

After completing repair, rerun Go-Chain tests to verify that problem is fixed and no other problems exist.

Table 2-11. STE/ICE No-Go Chain Tests (Contd).

NG90 GOVERNOR/POWER TEST FAULT ISOLATION (Contd) — TK MODE

5 CHECK AIR INTAKE SYSTEM:

- Check air intake system and repair if necessary (chapter 3, section III).
- If air intake system is OK, notify your supervisor.

NOTE

After completing repair, rerun Go-Chain tests to verify that problem is fixed and no other problems exist.

Table 2-11. STE/ICE No-Go Chain Tests (Contd).

NOTE

Test G01, VTM Connections and Checkout, must be performed before running STE/ICE tests.

NG120 — **BATTERY COMPARTMENT – POSITIVE SIDE VOLTAGE DROP CHECKS** — **TK MODE**

NOTE

Check voltage drop across solenoid, and all cables/connections in positive side of starter circuit. Use procedure outlined below for each voltage drop check.

TEST NO.	TEST
89	0-45 VOLTS DC

1 DO TEST PROBE CABLE OFFSET:

- Short clip leads of test probe cable W2 together.
- Dial 89 into TEST SELECT.
- Press and hold TEST until CAL message appears on display.
- Release TEST.
- Wait for offset value to appear on display.

CAL — PROMPTING MESSAGE

- Is offset value within limits of -6.8 to +6.8?

YES — **NO**

- Proceed to TM 9-4910-571-12&P for offset fault isolation.

2 MEASURE VOLTAGE DROP:

- Connect clip leads of W2 across part to be measured.
- Press TEST switch. Depress starter switch.
- The drop across a connection should be less than 0.1 volt and the drop across a cable should be less than 0.2 volt.
- Repair or replace defective part.

NOTE

After completing repair, rerun Go-Chain tests to verify that problem is fixed and no other problems exist.

Table 2-11. STE/ICE No-Go Chain Tests (Contd).

NOTE

Test G01, VTM Connections and Checkout, must be performed before running STE/ICE tests.

NG121 BATTERY COMPARTMENT – NEGATIVE SIDE VOLTAGE DROP CHECKS — TK MODE

NOTE

Check voltage drop across solenoid, and all cables/connections in positive side of starter circuit. Use procedure outlined below for each voltage drop check.

1 DO TEST PROBE CABLE OFFSET:

- Short clip leads of test probe cable W2 together.
- Dial 89 into TEST SELECT.
- Press and hold TEST until CAL message appears on display.

CAL — PROMPTING MESSAGE

- Is offset value within limits of -6.8 to +6.8?

YES — NO

- Proceed to TM 9-4910-571-12&P for offset fault isolation.

2 MEASURE VOLTAGE DROP:

- Connect clip leads of W2 across part to be measured.
- Press TEST switch. Depress starter switch.
- The drop across a connection should be less than 0.1 volt and the drop across a cable should be less than 0.2 volt.
- Repair or replace defective part.

NOTE

After completing repair, rerun Go-Chain tests to verify that problem is fixed and no other problems exist.

Table 2-11. STE/ICE No-Go Chain Tests (Contd).

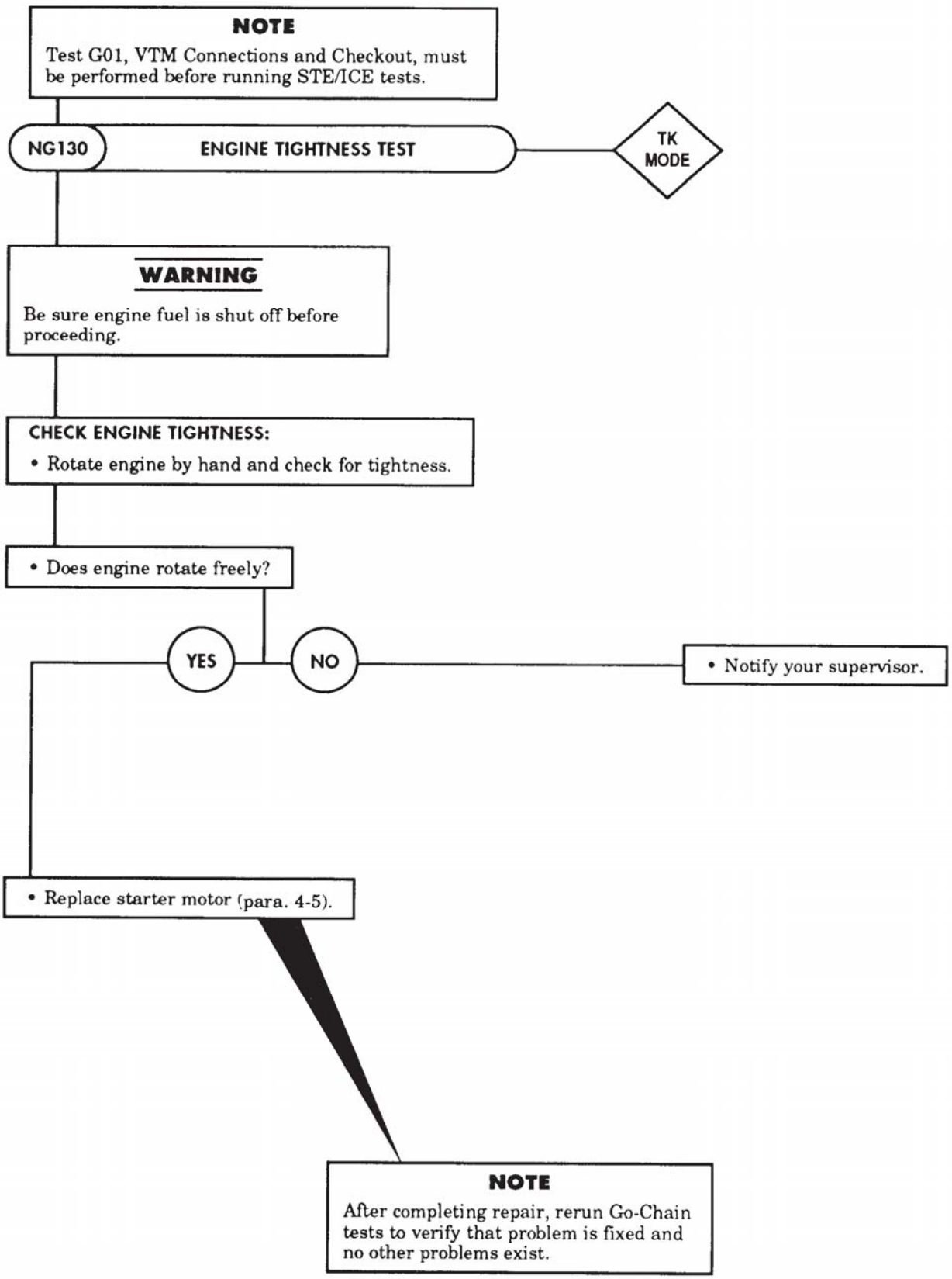

CHAPTER 3
ENGINE SYSTEMS MAINTENANCE

Section I. Engine Lubrication System Maintenance (page 3-1)
Section II. Clutch System Maintenance (page 3-16)
Section III. Air Intake System Maintenance (page 3-23)
Section IV. Fuel System Maintenance (page 3-32)
Section V. Accelerator System Maintenance (page 3-68)
Section VI. Exhaust System Maintenance (page 3-74)
Section VII. Cooling System Maintenance (page 3-84)

3-1. GENERAL

a. The Cummins NHC-250 diesel engine is used on all M809 series vehicles. It is a naturally-aspirated, liquid-cooled, overhead valve, four-cycle engine of in-line, six-cylinder design. The NHC-250 engine has a compression ratio of 15.8 to 1 and develops 240 horsepower at 2100 rpm. Peak torque is 560 lb-ft at 1600 rpm.

b. Both early model engines, serial number 1124663 and before, and late model engines, after serial number 1124663, are covered in this chapter. The differences between early and late models are changes to implement the clean air configuration and the use of top stop fuel injectors. Changes to the clean air configuration provide for controlled engine exhaust gas recirculation back to the air intake manifold. The tip stop fuel injectors are different from early model engine injectors in that the adapter is lower to accomodate the stop. The plunger coupling top is smaller and has an adjustable stop screw and locknut. Identification of both early and late model engines can be made horn the engine identification plate on the left side of front gearcase cover.

Section I. ENGINE LUBRICATION SYSTEM MAINTENANCE

3-2. ENGINE LUBRICATION SYSTEM MAINTENANCE INDEX

PARA. NO.	TITLE	PAGE NO.
3-3.	Oil Dipstick and Tube Replacement	3-2
3-4.	Crankcase Breather Maintenance	3-4
3-5.	Engine Oil Filter and Housing Maintenance	3-6
3-6.	Oil Pressure Piping Replacement	3-8
3-7.	Engine Draft Tube Replacement	3-10
3-8.	Oil Pump Pickup and Return Hose Replacement	3-12
3-9.	Front Sump Tube Replacement	3-13
3-10.	Engine AOAP Maintenance	3-14

3-3. OIL DIPSTICK AND TUBE REPLACEMENT

THIS TASK COVERS:

a. Removal **b. Installation**

INITIAL SETUP

APPLICABLE MODELS
All

MATERIALS/PARTS
Two lockwashers
Locking plate

REFERENCES (TM)
TM 9-2320-260-10
TM 9-2320-260-20P

EQUIPMENT CONDITION
- Parking brake set (TM 9-2320-260-10).
- Hood raised and secured (TM 9-2320-260-10).

a. Removal

1. Remove dipstick (6) from dipstick tube (7).
2. Remove nut (12), lockwasher (11), washer (10), screw (5), clamp (9), and dipstick tube (7) from bracket (13). Discard lockwasher (11).
3. , Remove dipstick tube (7) and adapter (8) from engine (1).
4. Remove nut (16), lockwasher (15), washer (14), screw (4), and bracket (13) from bracket (17). Discard lockwasher (15).
5. Bend tabs of locking plate (2) away from screw (3).
6. Remove screw (3), locking plate (2), and bracket (17) from engine (1). Discard locking plate (2)

b. Installation

1. Install bracket (17) on engine (1) with new locking plate (2) and screw (3). Tighten screw (3) 20-25 lb-ft (27-34 N•m).
2. Bend tabs of locking plate (2) over head of screw (3).
3. Install bracket (13) on bracket (17) with screw (4), washer (14), new lockwasher (15), and nut (16). Finger tighten nut (16).
4. Install adapter (8) and dipstick tube (7) on engine (1).
5. Install clamp (9) and dipstick tube (7) on bracket (13) with screw (5), washer (10), new lockwasher (11), and nut (12).
6. Tighten nut (16).
7. Install dipstick (6) in dipstick tube (7).

3-3. OIL DIPSTICK AND TUBE REPLACEMENT (Contd)

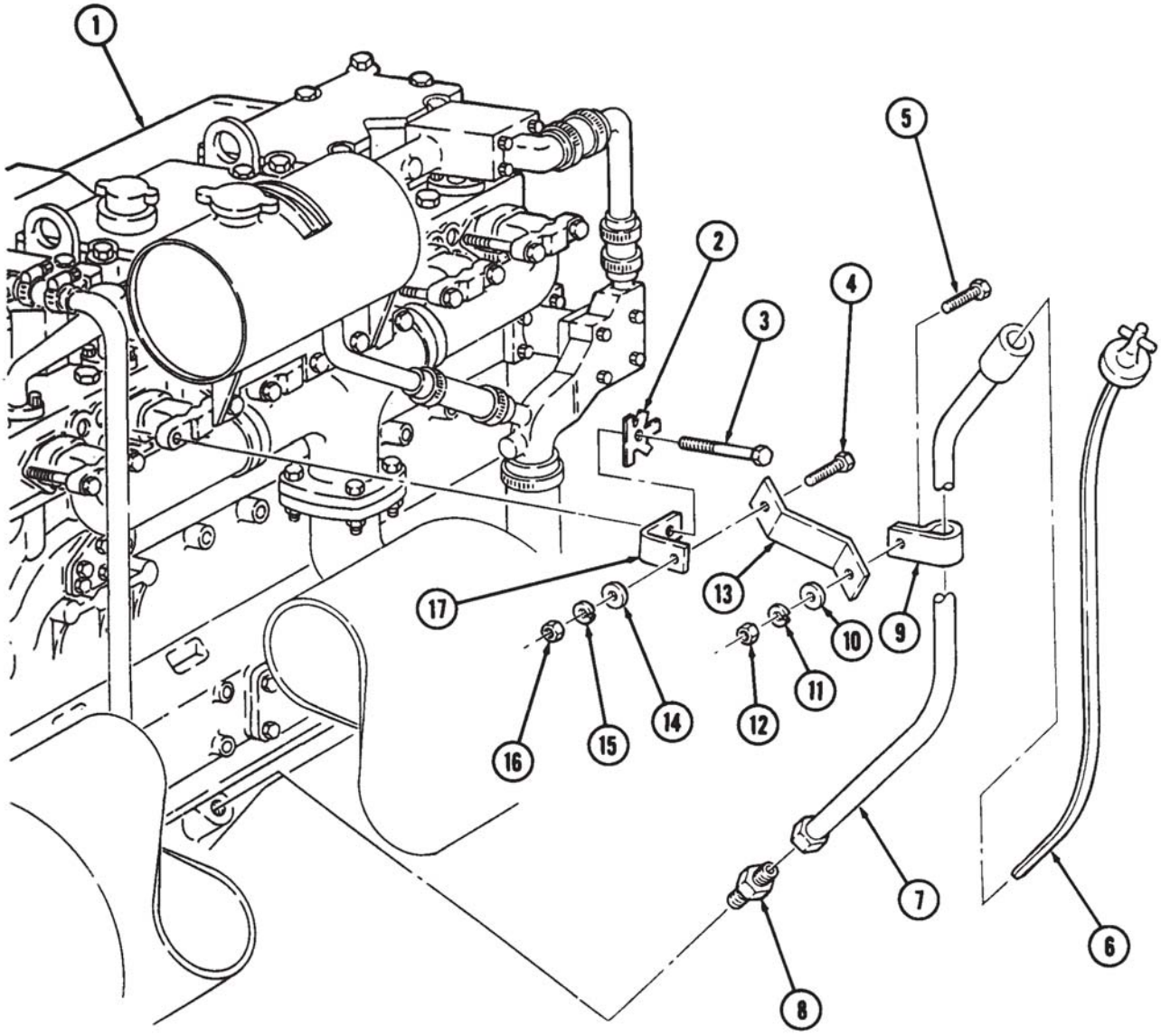

3-4. CRANKCASE BREATHER MAINTENANCE

THIS TASK COVERS:

a. Removal
b. Cleaning
c. Installation

INITIAL SETUP

APPLICABLE MODELS
All

MATERIALS/PARTS
Three lockwashers
Gasket
Drycleaning solvent (Appendix C, Item 29)
Rags (Appendix C, Item 22)
Adhesive sealant (Appendix C, Item 3)

REFERENCES (TM)
TM 9-2320-260-10
TM 9-2320-260-20P

EQUIPMENT CONDITION
- Parking brake set (TM 9-2320-260-10).
- Hood raised and secured (TM 9-2320-260-10).

GENERAL SAFETY INSTRUCTIONS
Keep fire extinguisher nearby when using drycleaning solvent.

a. Removal

NOTE

Perform steps 4 and 5 for late model engine, after serial number 1124663, equipped with clean air system.

1. Loosen two hose clamps (9) and remove hose (10) from crankcase breather housing (6) and draft tube (8).
2. Remove crankcase breather housing (6) from engine rocker cover (7).
3. Remove three screws (1), lockwashers (2), washers (3), cover (4), and gasket (5) from crankcase breather housing (6). Discard lockwashers (2) and gasket (5).
4. Loosen two hose clamps (11) and remove hose (12) from crankcase breather (13) and draft tube (14).
5. Remove crankcase breather (13) from engine rocker cover (7). Discard crankcase breather (13).

b. Cleaning

WARNING

Drycleaning solvent is flammable and will not be used near open flame. Use only in well-ventilated places. Failure to do so may result in injury to personnel.

Clean crankcase breather housing (6) and cover (4) with drycleaning solvent. Dry with clean rag.

c. Installation

NOTE

Perform steps 1 through 3 for late model engines, after serial number 1124663, equipped with clean air system.

1. Apply adhesive sealant to mating surface of new crankcase breather (13) and engine rocker cover (7).
2. Install crankcase breather (13) on engine rocker cover (7).

3-4. CRANKCASE BREATHER MAINTENANCE (Contd)

3. **Install hose (12)** on crankcase breather (13) and draft tube (14). Tighten two hose clamps (11).
4. **Install new gasket (5)** and cover (4) on crankcase breather housing (6) with three washers (3), new lockwashers (2), and screws (1).
5. **Apply adhesive sealant** to mating surface of crankcase breather housing (6) and engine rocker cover (7).
6. **Install crankcase** breather housing (6) on engine rocker cover (7).
7. **Install hose (10)** on crankcase breather housing (6) and draft tube (8). Tighten two hose clamps (9).

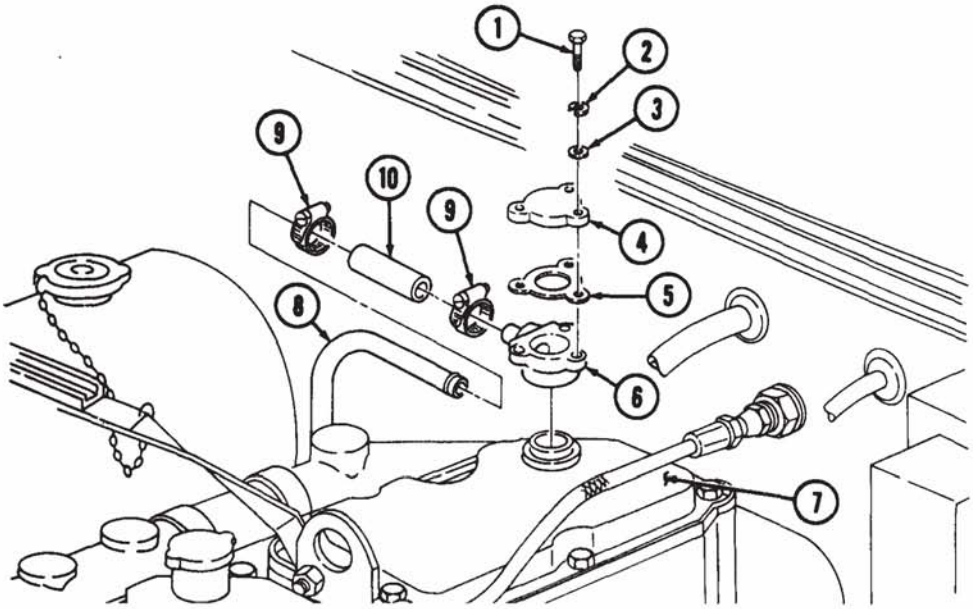

EARLY MODEL ENGINE

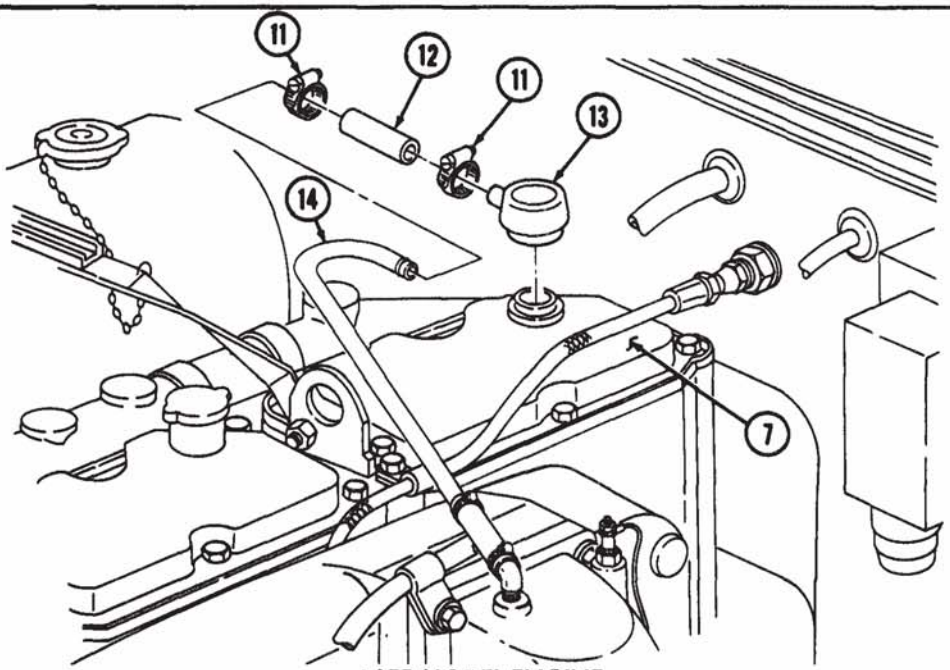

LATE MODEL ENGINE

3-5. ENGINE OIL FILTER AND HOUSING MAINTENANCE

THIS TASK COVERS:

a. Oil Drainage
b. Filter Removal
c. Oil Filter Housing Disassembly
d. Waning and Inspection
e. Oil Filter Housing Assembly
f. Filter Installation

INITIAL SETUP

APPLICABLE MODELS
All

MATERIALS/PARTS
Oil filter replacement kit, AR 51480
Copper gasket
Gasket
Seal
Drycleaning solvent (Appendix C, Item 29)
Lubricating oil (Appendix C, Item 20)
Rags (Appendix C, Item 22)

REFERENCES (TM)
LO 9-2320-260-12
TM 9-2320-260-10
TM 9-2320-260-20P

EQUIPMENT CONDITION
- Parking brake set (TM 9-2320-260-10).
- Hood raised and secured (TM 9-2320-260-10).

GENERAL SAFETY INSTRUCTIONS
- Do not drain oil when engine is hot.
- Keep fire extinguisher nearby when using drycleaning solvent.

a. Oil Drainage

WARNING

Do not drain oil when engine is hot. Injury to personnel may result.

NOTE

Have drainage container ready to catch oil.

1. Remove drainplug (10) and gasket (11) from oil pan (12). Allow oil to drain completely. Discard gasket (11).
2. Install new gasket (11) and drainplug (10) in oil pan (12). Tighten drainplug (10) 60-70 lb-ft (81-95 N•m).

NOTE

Have drainage container ready to catch oil.

3. Remove drainplug (4) from oil filter housing (1). Allow oil to drain completely.
4. Install drainplug (4) in oil filter housing (1). Tighten drainplug (4) 25-35 lb-ft (34-47 N•m).

b. Filter Removal

1. Loosen center bolt (3) and remove oil filter housing (1) from oil pump (15).
2. Remove oil filter element (13) and seal (14) from oil filter housing (l). Discard oil filter element (13) and seal (14).

c. Oil Filter Housing Disassembly

1. Remove clip pin (9), filter element support (8), seal (7), washer (6), and spring (5) from center bolt (3). Discard seal (7).
2. Remove center bolt (3) and copper gasket (2) from oil filter housing (l). Discard copper gasket (2).

3-5. ENGINE OIL FILTER AND HOUSING MAINTENANCE (Contd)

d. Cleaning and Inspection

WARNING

Drycleaning solvent is flammable and will not be used near open flame. Use only in well-ventilated places. Failure to do so may result in injury to personnel.

1. Clean oil filter housing (1) and center bolt (3) with drycleaning solvent.
2. Inspect sealing surface of oil pump (15), oil filter housing (1), center bolt (3), filter element support (8), and spring (5) for cracks, stripped threads, breaks, and grooves. Replace part(s) if damaged.

e. Oil Filter Housing Assembly

1. Install new copper gasket (2) on center bolt (3) and insert center bolt (3) in oil filter housing (1).
2. Install spring (5), washer (6), new seal (7), filter element support (8), and clip pin (9) on center bolt (3).

f. Filter Installation

1. Insert new oil filter element (13) in oil filter housing (1).
2. Apply light film of lubricating oil on new filter seal (14) and install filter seal (14) on sealing surface of oil pump (15).
3. Install oil filter housing (1) on oil pump (15) with center bolt (3). Tighten center bolt (3) 25-35 lb-ft (34-47 N•m).

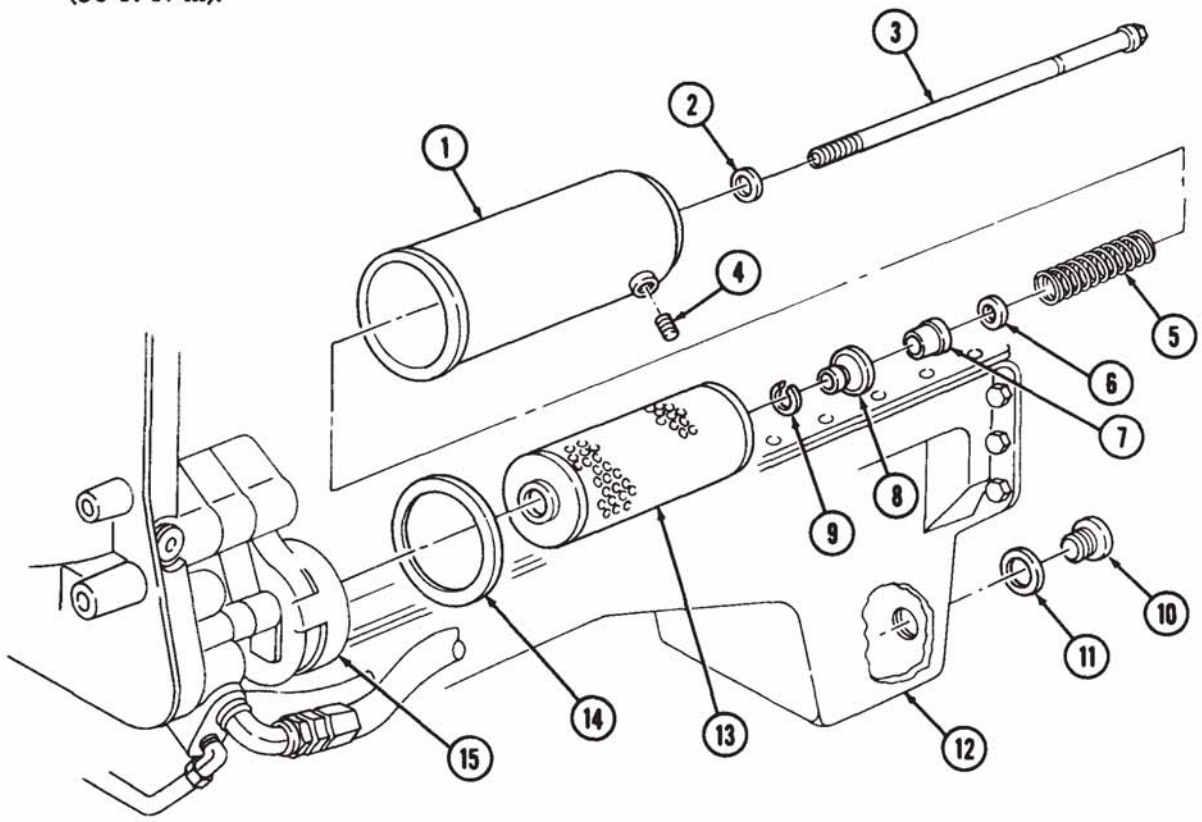

FOLLOW-ON TASKS: • Fill crankcase to proper oil level (LO 9-2320-260-12).
• Start engine (TM 9-2320-260-10) and check for oil leaks.

3-6. OIL PRESSURE PIPING REPLACEMENT

THIS TASK COVERS:

a. Removal **b. Installation**

INITIAL SETUP

APPLICABLE MODELS
All

MATERIALS/PARTS
Lockwasher
Anti seize tape (Appendix C, Item 30)

REFERENCES (TM)
TM 9-2320-260-10
TM 9-2320-260-20P

EQUIPMENT CONDITION
- Parking brake set (TM 9-2320-260-10).
- Hood raised and secured (TM 9-2320-260-10).

a. Removal

NOTE

Have drainage container ready to catch oil.

1. Disconnect oil pressure hose (9) from elbow (7). Allow oil to drain from oil pressure hose (9).
2. Disconnect oil pressure hose (9) from bulkhead union (6).
3. Remove screw (2), lockwasher (1), washer (3), clamp (4), and oil pressure hose (9) from rocker cover (5). Discard lockwasher (1).
4. Remove elbow (7) from engine block (8).
5. Disconnect oil pressure tube (17) from elbow (18).
6. Disconnect oil pressure tube (17) from tee (11).
7. Remove elbow (18) from oil pressure gage (10).
8. Disconnect electrical lead (16) from starter lockout switch (15).
9. Remove starter lockout switch (15) from tee (11).
10. Remove tee (11) from bulkhead union (6).

NOTE

Assistant will help with step 11.

11. Remove nut (13), washer (12), and bulkhead union (6) from engine firewall (14).

b. Installation

NOTE

Assistant will help with step 1.

1. Apply antiseize tape to male threads of bulkhead union (6), starter lockout switch (15), and oil pressure tube (17).
2. Install bulkhead union (6) in engine firewall (14) with washer (12) and nut (13).
3. Install tee (11) on bulkhead union (6).
4. Install starter lockout switch (15) on tee (11).
5. Connect electrical lead (16) to starter lockout switch (15).
6. Install elbow (18) on oil pressure gage (10).
7. Connect oil pressure tube (17) to tee (11).
8. Connect oil pressure tube (17) to elbow (18).

3-6. OIL PRESSURE PIPING REPLACEMENT (Contd)

9. Install elbow (7) in engine block (8).
10. Connect oil pressure hose (9) to elbow (7).
11. Connect oil pressure hose (9) to bulkhead union (6).
12. Install oil pressure hose (9) and clamp (4) on rocker cover (5) with washer (3), new lockwasher (1), and screw (2).

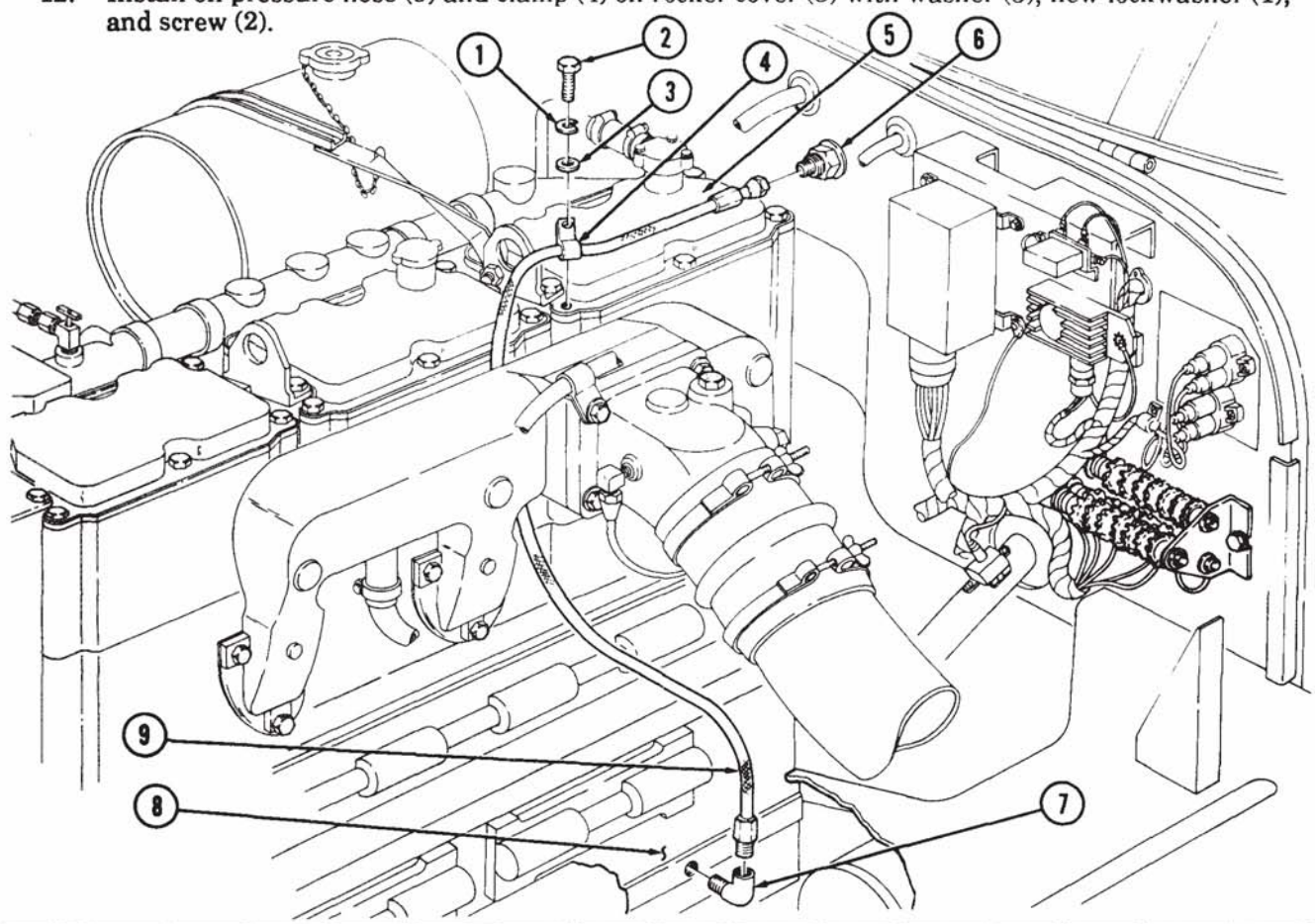

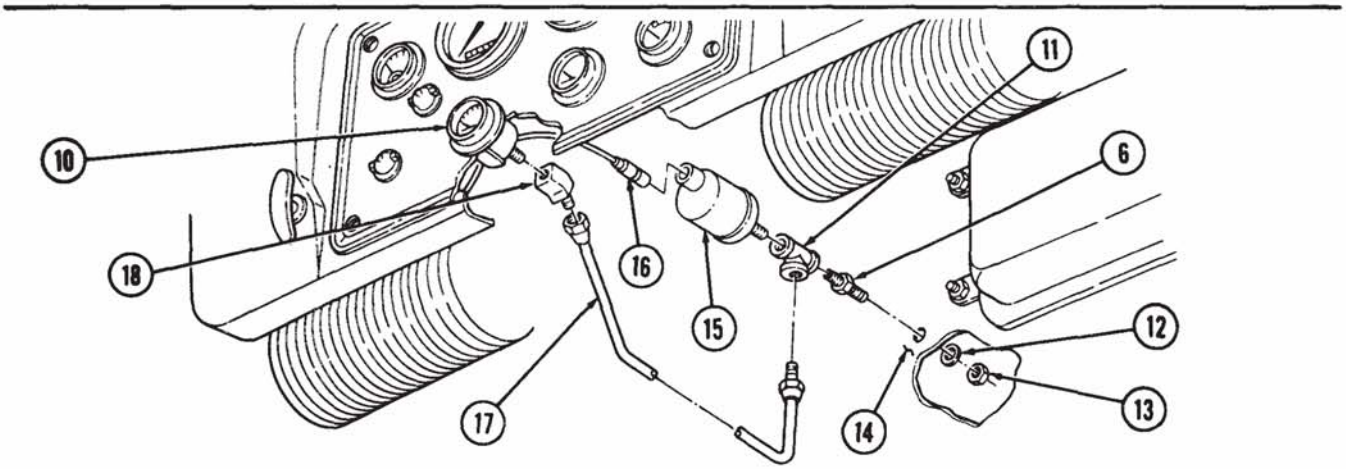

FOLLOW-ON TASK Start engine (TM 9-2320-260-10) and check for oil

3-7. ENGINE DRAFT TUBE REPLACEMENT

THIS TASK COVERS:

a. Removal

b. Installation

INITIAL SETUP

APPLICABLE MODELS

All

MATERIALS/PARTS

Locknut
Antiseize tape (Appendix C, Item 30)

REFERENCES (TM)

TM 9-2320-260-10
TM 9-2320-260-20P

EQUIPMENT CONDITION

- Parking brake set (TM 9-2320-260-10).
- Hood raised and secured (TM 9-2320-260-10).

a. Removal

NOTE

Perform steps 3 and 4 for late model engines, after serial number 1124663, equipped with clean air system.

1. Remove locknut (7), screw (4), clamp (6), and draft tube (8) from bracket (5). Discard locknut (7).
2. Remove two hose clamps (1), draft tube (8), and hose (2) from crankcase breather (3).
3. Remove four hose clamps (10), draft tube (9), and two hoses (11) from crankcase breather (12) and elbow (13).
4. Remove elbow (13) from air intake manifold (14).

b. Installation

NOTE

Perform steps 1 and 2 for late model engines, after serial number 1124663, equipped with clean air system.

1. Wrap male threads of elbow (13) with antiseize tape and install on air intake manifold (14).
2. Install two hoses (11) and draft tube (9) on elbow (13) and crankcase breather (12) with four hose clamps (10). Tighten four hose clamps (10).
3. Install hose (2) and draft tube (8) on crankcase breather (3) with two hose clamps (1). Tighten two hose clamps (1).
4. Install draft tube (8) and clamp (6) on bracket (5) with screw (4) and new locknut (7).

3-7. ENGINE DRAFT TUBE REPLACEMENT (Contd)

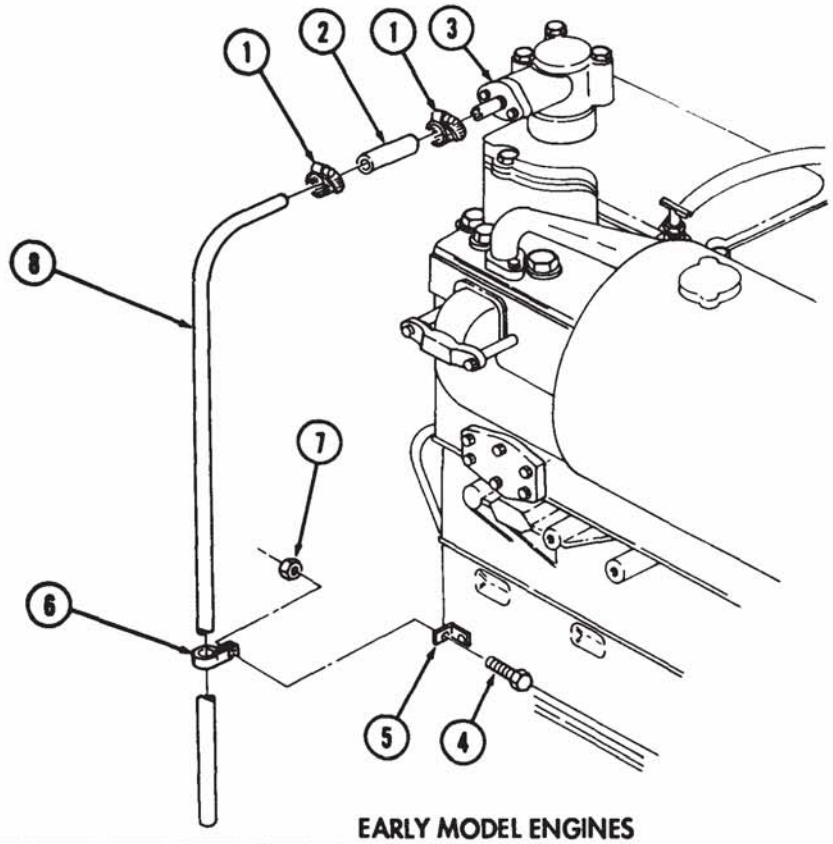

EARLY MODEL ENGINES

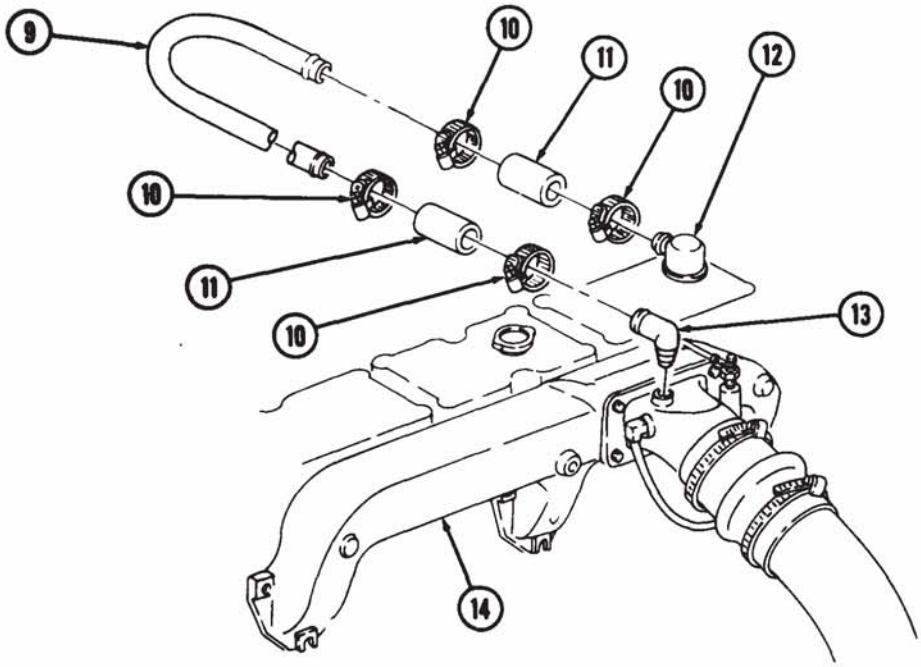

LATE MODEL ENGINES

3-8. OIL PUMP PICKUP AND RETURN HOSE REPLACEMENT

THIS TASK COVERS:

a. Removal

b. Installation

INITIAL SETUP

APPLICABLE MODELS

All

MATERIALS/PARTS

Two screw-assembled lockwashers
Antiseize tape (Appendix C, Item 30)

REFERENCES (TM)

LO 9-2320-260-12
TM 9-2320-260-10
TM 9-2320-260-20P

EQUIPMENT CONDITION

- Parking brake set (TM 9-2320-260-10).
- Hood raised and secured (TM 9-2320-260-10).
- Oil drained (para. 3-5).

NOTE

Oil pump pickup hose and oil pump return hose are replaced basically the same way. This procedure is for the oil pump pickup hose.

a. Removal

1. Remove two screw-assembled lockwashers (6), clamps (3), oil pump return hose (2), and oil pump pickup hose (7) from oil pan (4). Discard screw-assembled lockwashers (6).

NOTE

Have drainage container ready to catch oil.

2. Disconnect oil pump pickup hose (7) from adapter flange (5). Allow oil to drain completely.
3. Disconnect oil pump pickup hose (7) from oil pump (1).

b. Installation

1. Apply antiseize tape to male threads of oil pump pickup hose (7) and adapter flange (5).
2. Connect oil pump pickup hose (7) to oil pump (1) and adapter flange (5).
3. Install oil pump pickup hose (7) and oil pump return hose (2) on oil pan (4) with two clamps (3) and new screw-assembled lockwashers (6). Tighten screw-assembled lockwashers (6) 35-40 lb-ft (47-54 N•m).

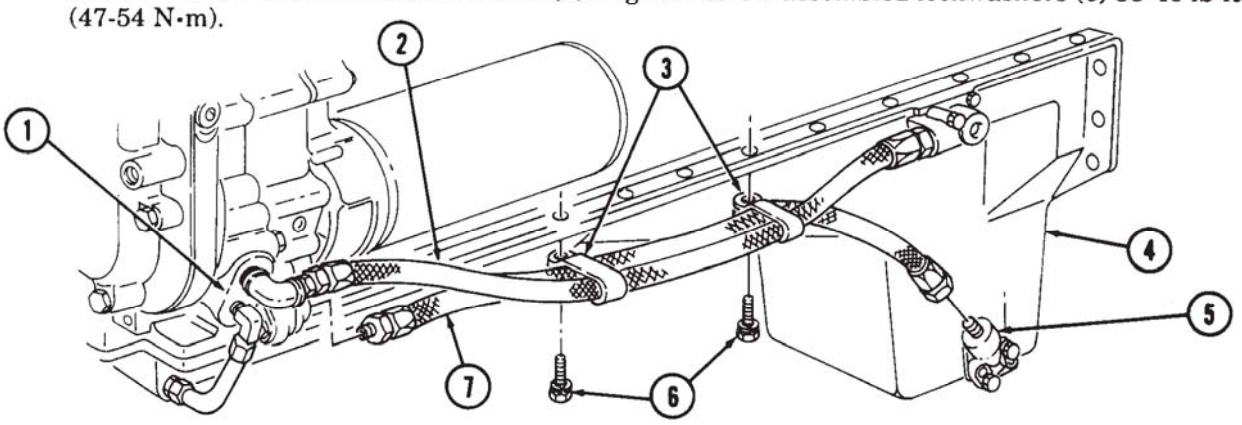

FOLLOW-ON TASKS:
- Fill crankcase to proper oil level (LO 9-2320-260-12).
- Start engine (TM 9-2320-260-10) and check for oil leaks.

3-9. FRONT SUMP TUBE REPLACEMENT

THIS TASK COVERS:

a. Removal **b. Installation**

INITIAL SETUP

APPLICABLE MODELS
All

MATERIALS/PARTS
Two packing sleeves
Antiseize tape (Appendix C, Item 30)

REFERENCES (TM)
LO 9-2320-260-12
TM 9-2320-260-10
TM 9-2320-260-20P

EQUIPMENT CONDITION
- Parking brake set (TM 9-2320-260-10).
- Hood raised and secured (TM 9-2320-260-10).

a. Removal

NOTE

Have drainage container ready to catch oil.

1. Disconnect front sump tube (3) from adapter (4).
2. Disconnect front sump tube (3) from elbow (2) and slide connecting nuts (7) toward center of front sump tube (3).
3. Turn elbow (2) 1/4-turn counterclockwise and remove front sump tube (3).
4. Remove two packing sleeves (6) from front sump tube (3). Discard packing sleeves (6).
5. Remove elbow (2) from oil pump (1).
6. Remove adapter (4) from oil pan (5).

b. Installation

1. Apply antiseize tape to male threads of adapter (4) and elbow (2).
2. Install adapter (4) on oil pan (5).
3. Install elbow (2) on oil pump (1). Tighten elbow (2), then back off 1/4-turn.
4. Install two new packing sleeves (6) on ends of front sump tube (3).
5. Connect front sump tube (3) to adapter (4). Do not tighten front sump tube (3).
6. Connect front sump tube (3) to elbow (2).
7. Tighten front sump tube (3) connections to adapter (4) and elbow (2).

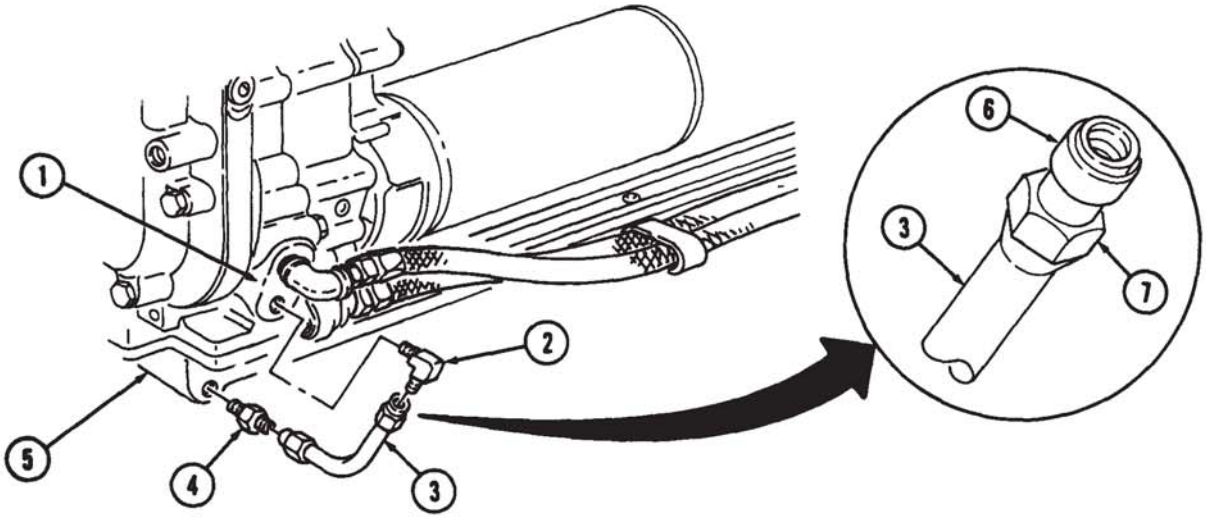

FOLLOW-ON TASKS:
- Fill crankcase to proper oil level (LO 9-2320-260-12).
- Start engine (TM 9-2320-260-10) and check for oil leaks.

3-10. ENGINE AOAP MAINTENANCE

THIS TASK COVERS:

Engine Oil Sampling

INITIAL SETUP

APPLICABLE MODELS
All

MATERIALS/PARTS
Rubber hose
Oil sampling bottle (Appendix C, Item 7)

REFERENCES (TM)
LO 9-2320-260-12
TM 9-2320-260-10
TM 9-2320-260-20P

EQUIPMENT CONDITION
- Parking brake set (TM 9-2320-260-10).
- Hood raised and secured (TM 9-2320-260-10).

Engine Oil Sampling

NOTE

Engine should be at normal operating temperature to ensure circulating oil has reached a uniform consistency. Failure to allow engine to reach normal operating temperature may result in an inaccurate AOAP analysis.

1. Start engine (TM 9-2320-260-10) and run until normal operating temperature is reached.
2. Install rubber hose (2) on oil sampling valve (1).

NOTE

- Perform step 3 to flush engine oil from oil sampling valve.
- Have clean drainage container ready to catch oil.

3. Open oil sampling valve (1) and drain 1 pt (0.473 L) of oil into drainage container.
4. Close oil sampling valve (1).
5. Return drained oil to engine crankcase (LO 9-2320-260-12).
6. Place oil sampling bottle (3) under oil sampling valve (1) and place rubber hose in oil sampling bottle (3).
7. Open oil sampling valve (1) and fill oil sampling bottle (3) to within 0.5 in. (1.3 cm) from top of oil sampling bottle (3).
8. Close oil sampling valve (1).
9. Remove rubber hose (2) from oil sampling bottle (3) and oil sampling valve (1).
10. Stop engine (TM 9-2320-260-10).
11. Notify your supervisor for processing AOAP oil sample.

3-10. ENGINE AOAP MAINTENANCE (Contd)

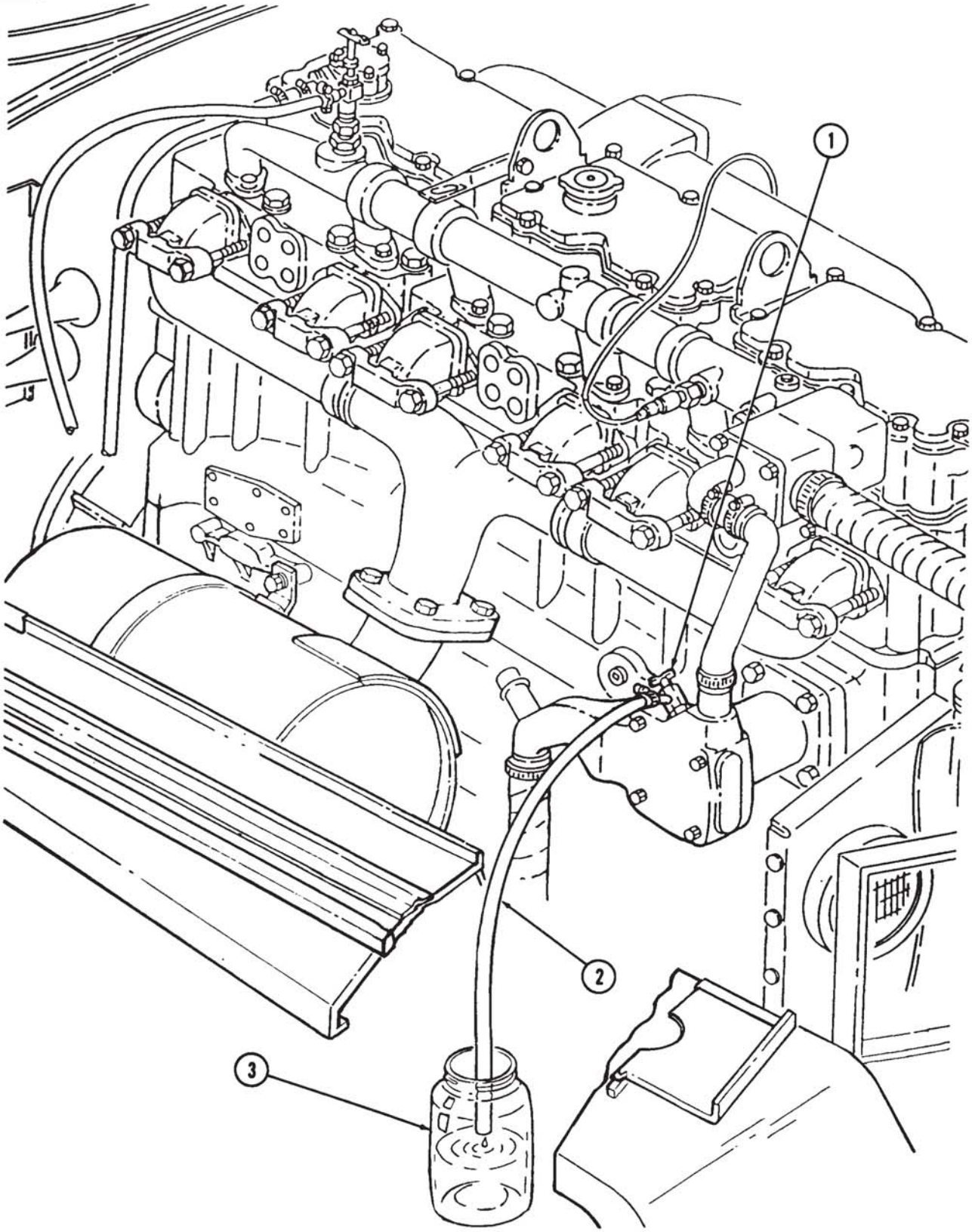

Section II. CLUTCH SYSTEM MAINTENANCE

3-11. CLUTCH SYSTEM MAINTENANCE INDEX

PARA. NO.	TITLE	PAGE NO.
3-12.	Clutch Pedal Maintenance	3-16
3-13.	Clutch Control Linkage Replacement	3-19

3-12. CLUTCH PEDAL MAINTENANCE

THIS TASK COVERS:

a. Removal
b. Installation
c. Adjustment

INITIAL SETUP

APPLICABLE MODELS
All

MATERIALS/PARTS
Locknut
Chalk (Appendix C, Item 10)

REFERENCES (TM)
TM 9-2320-260-10
TM 9-2320-260-20P

EQUIPMENT CONDITION
Parking brake set (TM 9-2320-260-10).

a. Removal

NOTE

Mark position of clutch pedal in clutch pedal lever for installation.

1. Remove clutch return spring (5) from angle bracket (6) and retaining plate (4).
2. Using chalk, mark shaft of clutch pedal (1) at bottom side of clutch pedal lever (7).
3. Remove locknut (3), screw (8), clutch pedal (1), and bumper (9) from clutch pedal lever (7) and cab floor (2). Discard locknut (3).

b. Installation

1. Place clutch pedal (1) through hole in cab floor (2).
2. Position bumper (9) on clutch pedal lever (7).
3. Insert clutch pedal (1) through bumper (9) and clutch pedal lever (7) to marked position, and install with screw (8) and new locknut (3).
4. Install clutch return spring (5) on retaining plate (4) and angle bracket (6).

3-12. CLUTCH PEDAL MAINTENANCE (Contd)

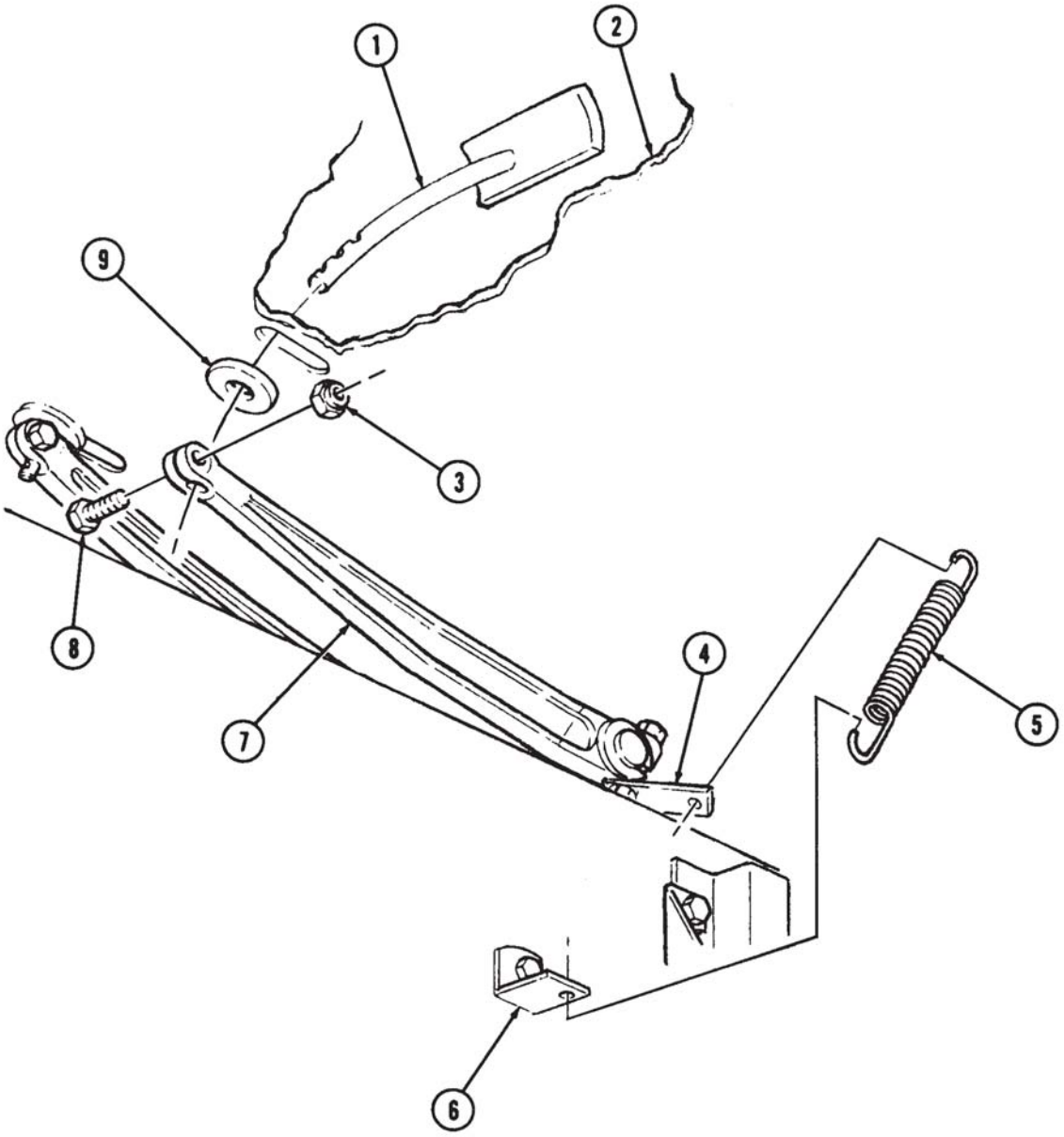

3-12. CLUTCH PEDAL MAINTENANCE (Contd)

c. Adjustment

1. Using chalk, mark shaft of clutch pedal (1) where shaft passes through cab floor (2).
2. Depress clutch pedal (1) slowly until resistance is felt and make second chalk mark where shaft passes through cab floor (2).
3. Release clutch pedal (1) and measure distance between two chalk marks. Distance (free pedal travel) should be 2-2.5 in. (5.1-6.4 cm).
4. If free pedal travel is less than 2 in. (5.1 cm), loosen nut (4) and lengthen two clevises (5) and (6) by turning turnbuckle (3) counterclockwise.
5. If free pedal travel is more than 2.5 in. (6.4 cm), loosen nut (4) and shorten two clevises (5) and (6) by turning turnbuckle (3) clockwise.
6. Recheck free pedal travel and tighten nut (4).

NOTE

Nut may be assembled on either side of lever to provide for proper adjustment.

7. For control linkage adjustment on M816 wreckers, loosen nut (9) and turn screw (8) left or right until there is a 0.094-0.25 in. (2.4-6.3 mm) clearance between screw (8) and stop (7).
8. Tighten nut (9) and recheck clearance.

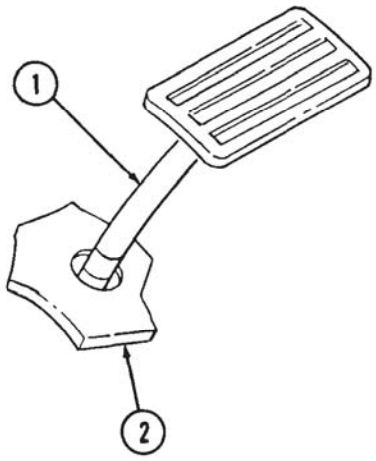

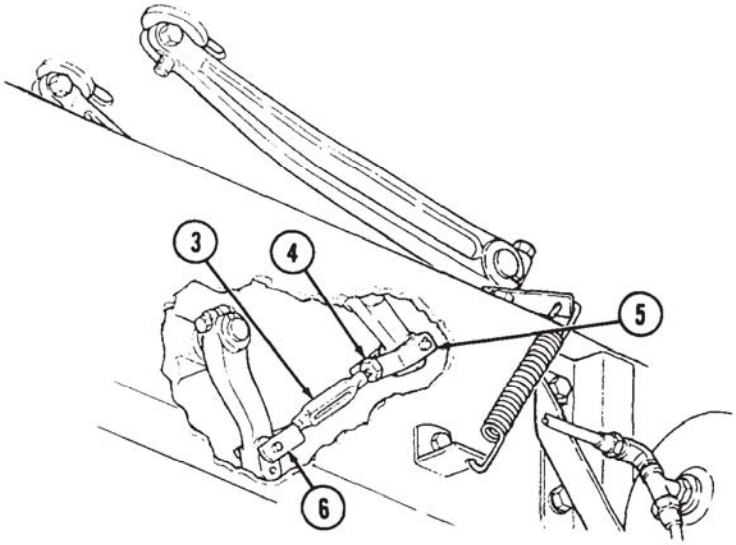

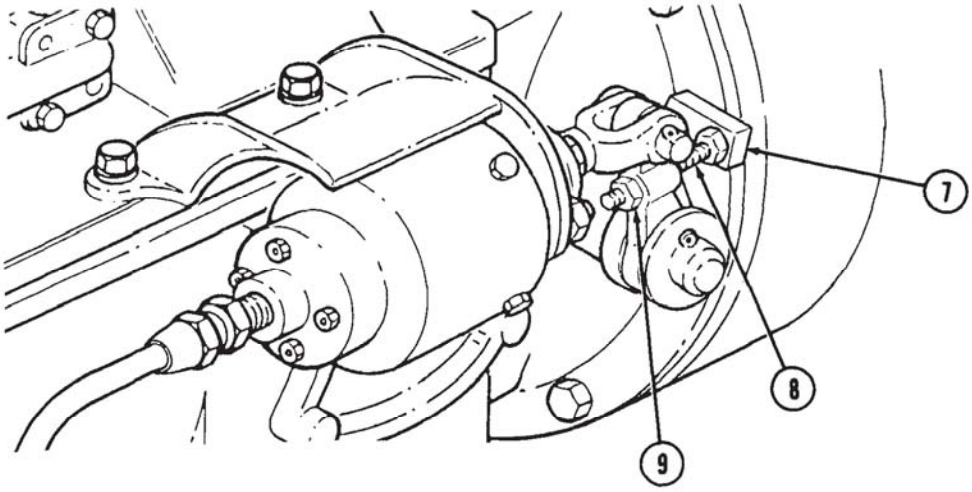

3-13. CLUTCH CONTROL LINKAGE REPLACEMENT

THIS TASK COVERS:

a. Removal **b. Installation**

INITIAL SETUP

APPLICABLE MODELS
All

MATERIALS/PARTS
Cotter pin
Four locknuts
Three woodruff keys
Chalk (Appendix C, Item 10)

REFERENCES (TM)
TM 9-2320-260-10
TM 9-2320-260-20P

EQUIPMENT CONDITION
Parking brake set (TM 9-2320-260-10).

a. Removal

1. Remove clutch return spring (5) from angle bracket (6) and retaining plate (4).
2. Using chalk, mark shaft of clutch pedal (1) at bottom side of clutch pedal lever (7).
3. Remove locknut (3), screw (8), clutch pedal (1), and bumper (9) from clutch pedal lever (7) and cab floor (2). Discard locknut (3).

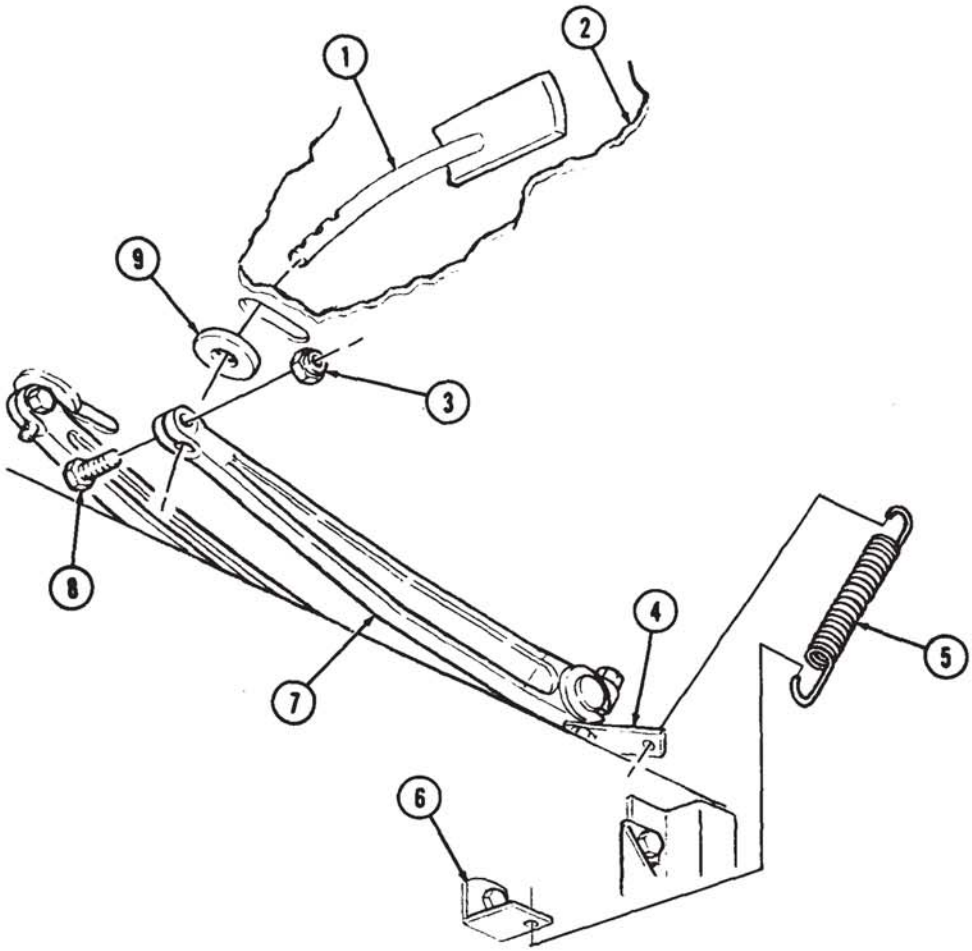

3-13. CLUTCH CONTROL LINKAGE REPLACEMENT (Contd)

4. Remove locknut (2), screw (5), retaining plate (4), clutch pedal lever (1), and woodruff key (3) from lever shaft (23). Discard locknut (2) and woodruff key (3).
5. Remove cotter pin (7), straight pin (16), and clevis (8) from remote control lever (17). Discard cotter pin (7).

NOTE

Do not remove spring-loaded pin from clevis.

6. Pull spring-loaded pin (11) to one side of clevis (12) and remove clevis (12) from remote control lever (13).
7. Loosen nut (9) and remove clevis (8) and nut (9) from turnbuckle (10).
8. Remove turnbuckle (10) from clevis (12).
9. Remove locknut (21), screw (18), remote control lever (17), and woodruff key (22) from lever shaft (23). Discard locknut (21) and woodruff key (22).
10. Remove lever shaft (23) from bracket (6).
11. Remove locknut (15), screw (14), remote control lever (13), and woodruff key (19) from clutch release shaft (20). Discard locknut (15) and woodruff key (19).

b. Installation

1. Install new woodruff key (19) and remote control lever (13) on clutch release shaft (20) with screw (14) and new locknut (15).
2. Install lever shaft (23) in bracket (6).
3. Install new woodruff key (22) and remote control lever (17) on lever shaft (23) with screw (18) and new locknut (21).
4. Install turnbuckle (10) on clevis (12).
5. Install nut (9) on clevis (8) and install clevis (8) on turnbuckle (10). Tighten nut (9) against turnbuckle (10).
6. Install clevis (8) on remote control lever (17) with straight pin (16) and new cotter pin (7).
7. Pull spring-loaded pin (11) to one side of clevis (12) and install clevis (12) on remote control lever (13).
8. Install new woodruff key (3), clutch pedal lever (1), and retaining plate (4) on lever shaft (23) with screw (5) and new locknut (2).

3-13. CLUTCH CONTROL LINKAGE REPLACEMENT (Contd)

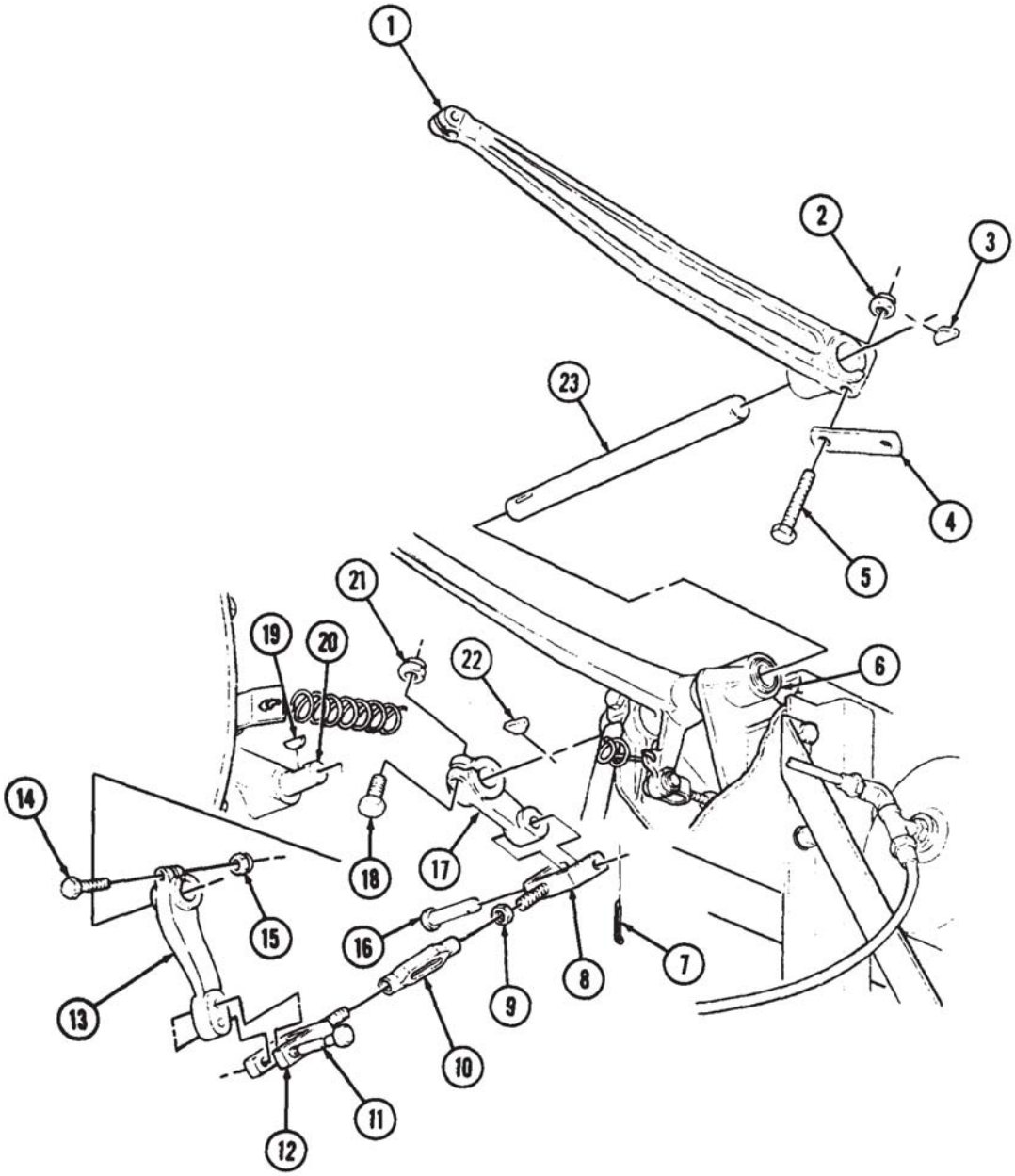

3-13. CLUTCH CONTROL LINKAGE REPLACEMENT (Contd)

9. Place clutch pedal (1) through hole in cab floor (2).
10. Install bumper (9) and clutch pedal (1) on clutch pedal lever (7).
11. Aline chalk mark on clutch pedal (1) with bottom side of clutch pedal lever (7) and install with screw (8) and new locknut (3).
12. Install clutch return spring (5) on angle bracket (6) and retaining plate (4).

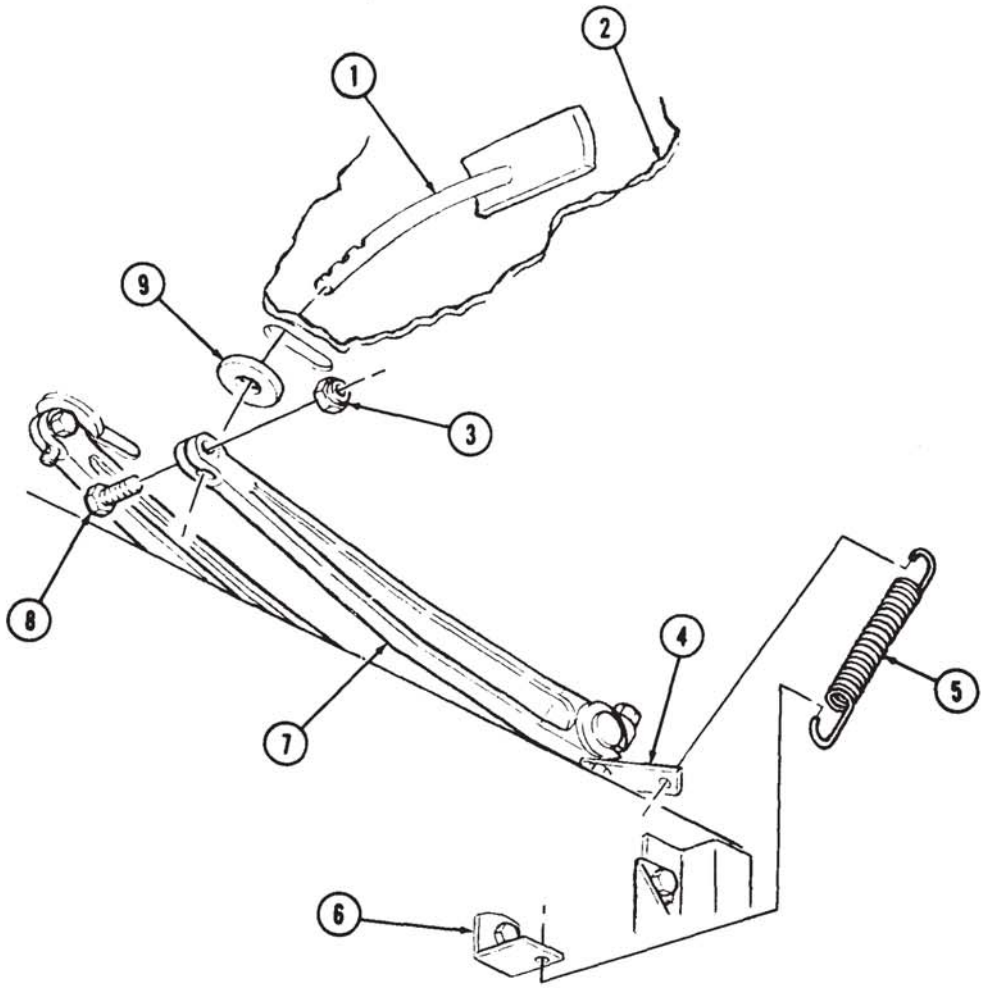

FOLLOW-ON TASK: Adjust clutch pedal (para. 3-12).

Section III. AIR INTAKE SYSTEM MAINTENANCE

3-14. AIR INTAKE SYSTEM MAINTENANCE INDEX

PARA. NO.	TITLE	PAGE NO.
3-15.	Air Cleaner Assembly Replacement	3-23
3-16.	Air Cleaner Hoses Replacement	3-25
3-17.	Air Cleaner Element Maintenance	3-26
3-18.	Air Cleaner Indicator Maintenance	3-28

3-15. AIR CLEANER ASSEMBLY REPLACEMENT

THIS TASK COVERS:

a. Removal **b. Installation**

INITIAL SETUP

APPLICABLE MODELS
All

MATERIALS/PARTS
Five locknuts

REFERENCES (TM)
TM 9-2320-260-10
TM 9-2320-260-20P

EQUIPMENT CONDITION
- Parking brake set (TM 9-2320-260-10).
- Hood raised and secured (TM 9-2320-260-10).

3-15. AIR CLEANER ASSEMBLY REPLACEMENT (Contd)

a. Removal

1. Remove two clamps (7) and hose (8) from air cleaner (14) and intake tube (10).
2. Remove locknut (9) and screw (6) from strap (5). Discard locknut (9).
3. Release latch (11) and remove air cleaner (14) from straps (4) and (5).
4. Remove four locknuts (13), screws (3), washers, (2), and straps (4) and (5) from fender (12). Discard locknuts (13).
5. Loosen clamp (15) and remove cap (1) from air cleaner (14).

b. Installation

1. Install cap (1) on air cleaner (14) and tighten clamp (15).
2. Install straps (4) and (5) on fender (12) with four washers (2), screws (3), and new locknuts (13).
3. Install air cleaner (14) on straps (4) and (5) and close latch (11).
4. Install screw (6) and new locknut (9) on strap (5).
5. Install hose (8) on air cleaner (14) and intake tube (10) with two clamps (7).

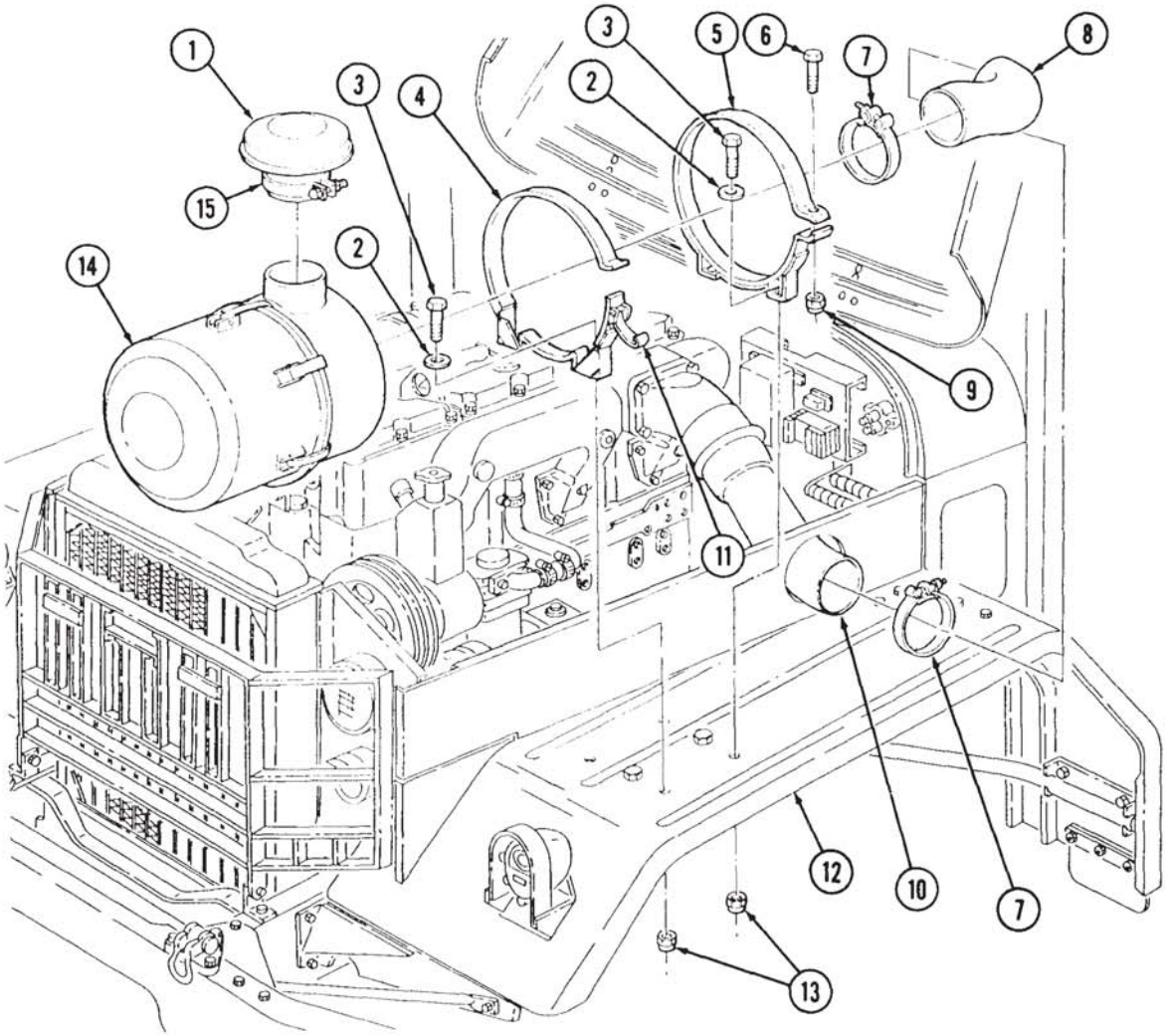

3-16. AIR CLEANER HOSES REPLACEMENT

THIS TASK COVERS:

a. Removal **b. Installation**

INITIAL SETUP

APPLICABLE MODELS
All

REFERENCES (TM)
TM 9-2320-260-10
TM 9-2320-260-20P

EQUIPMENT CONDITION
- Parking brake set (TM 9-2320-260-10).
- Hood raised and secured (TM 9-2320-260-10).

a. Removal

1. Remove two clamps (6) and hose (7) from air cleaner (8) and intake tube (5).
2. Remove clamp (4) and intake tube (5) from hose (3) and side panel (9).
3. Remove clamp (2) and hose (3) from intake manifold (1).

b. Installation

1. Install hose (3) on intake manifold (1) with clamp (2).
2. Insert intake tube (5) through side panel (9) and install on hose (3) with clamp (4).
3. Install hose (7) on air cleaner (8) and intake tube (5) with two clamps (6).

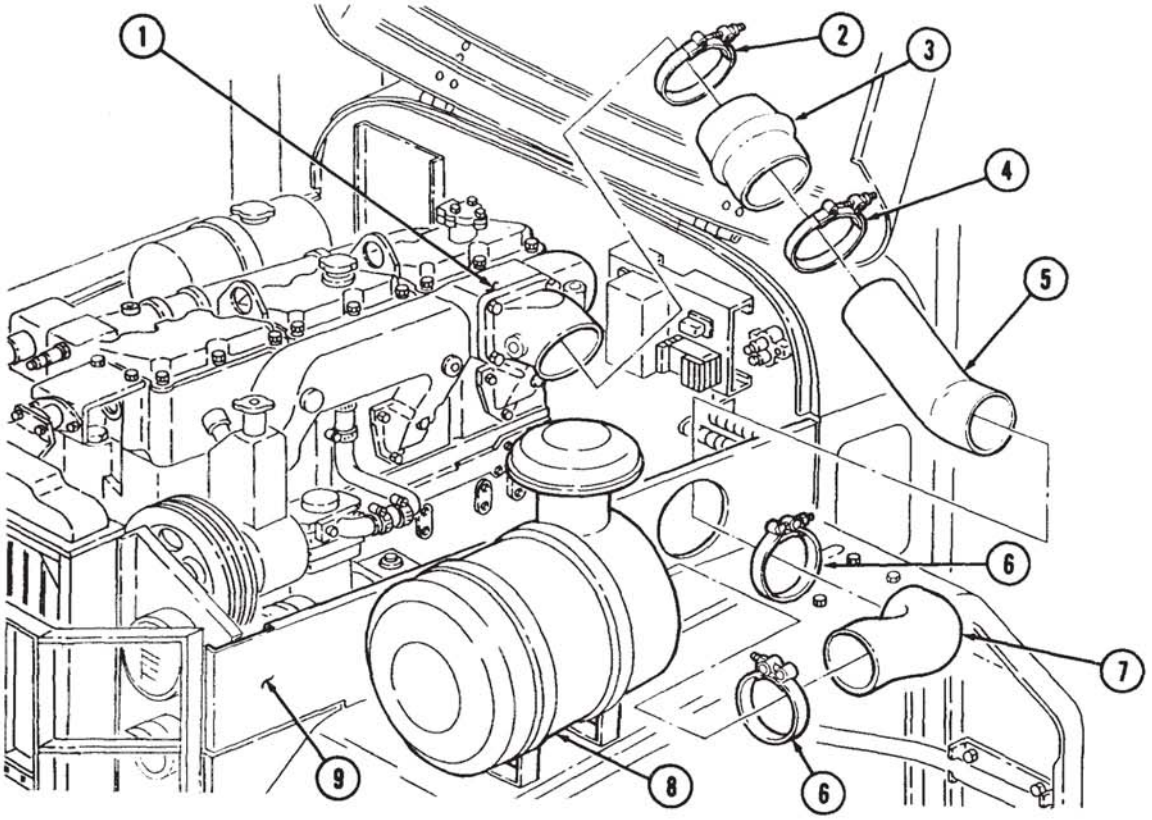

3-17. AIR CLEANER ELEMENT MAINTENANCE

THIS TASK COVERS:

a. Removal
b. Cleaning with Compressed Air
c. Cleaning with Detergent
d. Emergency Cleaning
e. Installation

INITIAL SETUP

APPLICABLE MODELS
All

MATERIALS/PARTS
Nonsudsing detergent (Appendix C, Item 15)

REFERENCES (TM)
FM 21-41
TM 9-2320-260-10
TM 9-2320-260-20P

EQUIPMENT CONDITION
Parking brake set (TM 9-2320-260-10).

GENERAL SAFETY INSTRUCTIONS
- Observe NBC warning.
- NBC contaminated filters must be handled using adequate precautions.
- Compressed air source will not exceed 30 psi (207 kPa).
- Eyeshields must be worn when cleaning with compressed air.

WARNING

NBC contaminated filters must be handled using adequate precautions (FM 21-41) and must be disposed of by trained personnel.

a. Removal

1. Release latch (6) on air cleaner strap (7).
2. Release five manifold latches (2) and remove air cleaner body (1) from air cleaner manifold (5) and air cleaner strap (7).
3. Remove gasket (3) from air cleaner body (1). Replace gasket (3) if cut or worn.
4. Remove filter element (4) from air cleaner manifold (5). Replace filter element (4) if ripped or torn.

b. Cleaning with Compressed Air

WARNING

Compressed air source will not exceed 30 psi (207 kPa). When cleaning with compressed air, eyeshields must be worn. Failure to wear eyeshields may result in injury to personnel.

1. Remove dust and dirt from filter element (4) by directing air stream from inside to outside of filter element (4).
2. Hold air nozzle at an angle 6 in. (15 cm) from filter element (4) and blow away loosened dirt or dust from outside of filter element (4).

c. Cleaning with Detergent

1. Remove dust and dirt from filter element (4) by gently handwashing in warm water and nonsudsing detergent.
2. Gently rinse filter element (4) in warm water.
3. Allow filter element (4) to air dry.

3-17. AIR CLEANER ELEMENT MAINTENANCE (Contd)

d. Emergency Cleaning

CAUTION

Do not strike ends of filter element on hard surface. Damage to filter element may result.

Holding side of filter element (4) horizontally, gently tap filter element (4) by hand to free dust and dirt.

e. Installation

1. Install filter element (4) in air cleaner manifold (5).
2. Install gasket (3) on air cleaner body (1).
3. Position air cleaner body (1) on air cleaner manifold (5) and air cleaner strap (7).

NOTE

Instruction plate on air cleaner body should face out and arrows on end of air cleaner body should point up.

4. Install air cleaner body (1) on air cleaner manifold (5) with five manifold latches (2) and fasten latch (6) on air cleaner strap (7).

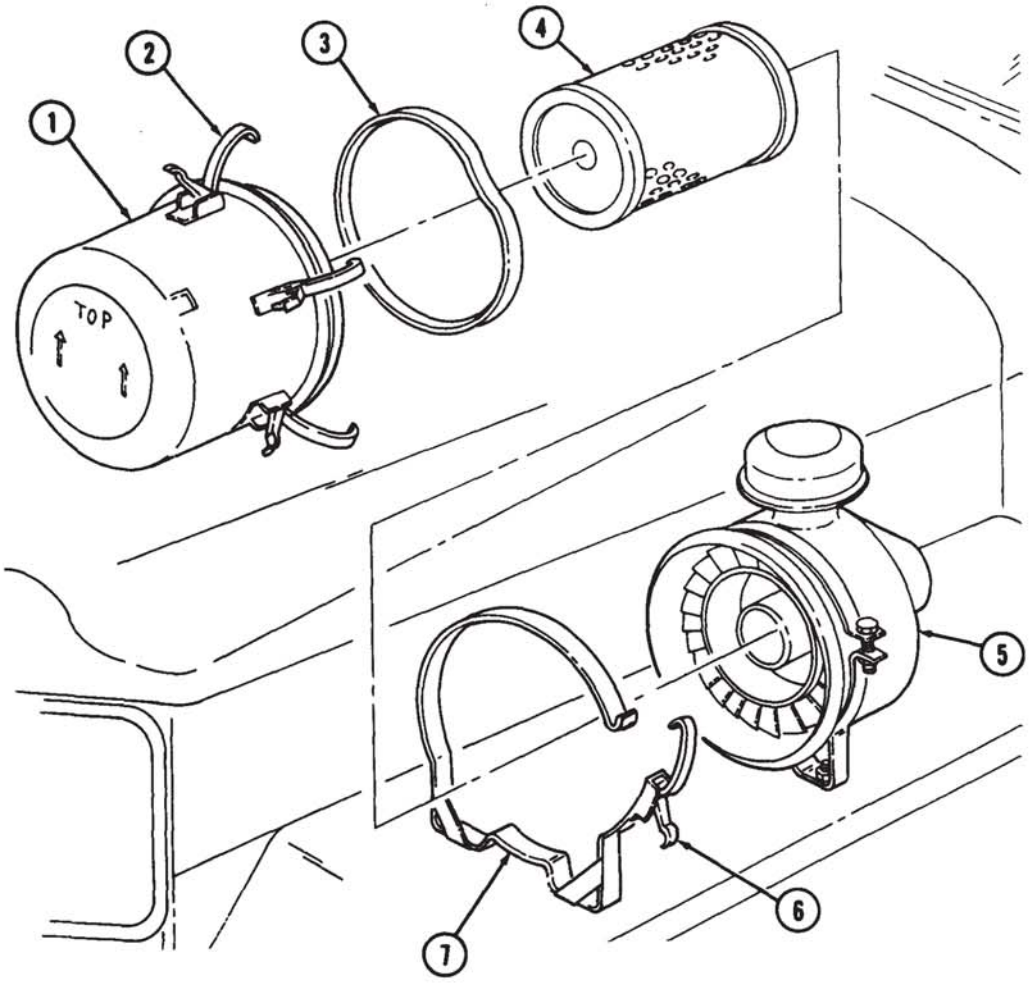

3-18. AIR CLEANER INDICATOR MAINTENANCE

THIS TASK COVERS:

a. Testing
b. Removal
c. Cleaning and Inspection
d. Installation

INITIAL SETUP

APPLICABLE MODELS
All

MATERIALS/PARTS
Two locknuts
Antiseize tape (Appendix C, Item 30)
Cardboard

REFERENCES (TM)
TM 9-2320-260-10
TM 9-2320-260-20P

EQUIPMENT CONDITION
- Parking brake set (TM 9-2320-260-10).
- Hood raised and secured (TM 9-2320-260-10).

GENERAL SAFETY INSTRUCTIONS
- Compressed air source will not exceed 30 psi (207 kPa).
- Eyeshields must be worn when cleaning with compressed air.

a. Testing

NOTE

Assistant will help with testing.

1. Loosen cap clamp (2) and remove cap (1) from air cleaner (4).
2. Start engine (TM 9-2320-260-10), and run at 1200 rpm.
3. Cover approximately 90% of air cleaner opening (5) with piece of cardboard (3).
4. Observe air cleaner indicator (6) in cab of vehicle to see if red band (7) is visible. If red band (7) is visible, air cleaner indicator (6) is working properly. Reset by pressing bottom of air cleaner indicator (6). If red band (7) is not visible, air cleaner indicator (6) is defective or air cleaner indicator tube (8) is obstructed or broken.
5. Stop engine (TM 9-2320-260-10).
6. Remove cardboard (3), install cap (1), and tighten cap clamp (2).

b. Removal

1. Disconnect nut (9) from adapter (14).
2. Remove adapter (14) from air cleaner indicator (6).
3. Remove two locknuts (10), washers (11), screws (12), and air cleaner indicator (6) from dash panel (13). Discard locknuts (10).
4. Disconnect nut (19) from elbow (20).
5. Remove elbow (20) from indicator filter (18).
6. Remove indicator filter (18) from intake manifold (17).
7. Remove grommet (16) and air cleaner indicator tube (8) from firewall (15).

3-18. AIR CLEANER INDICATOR MAINTENANCE (Contd)

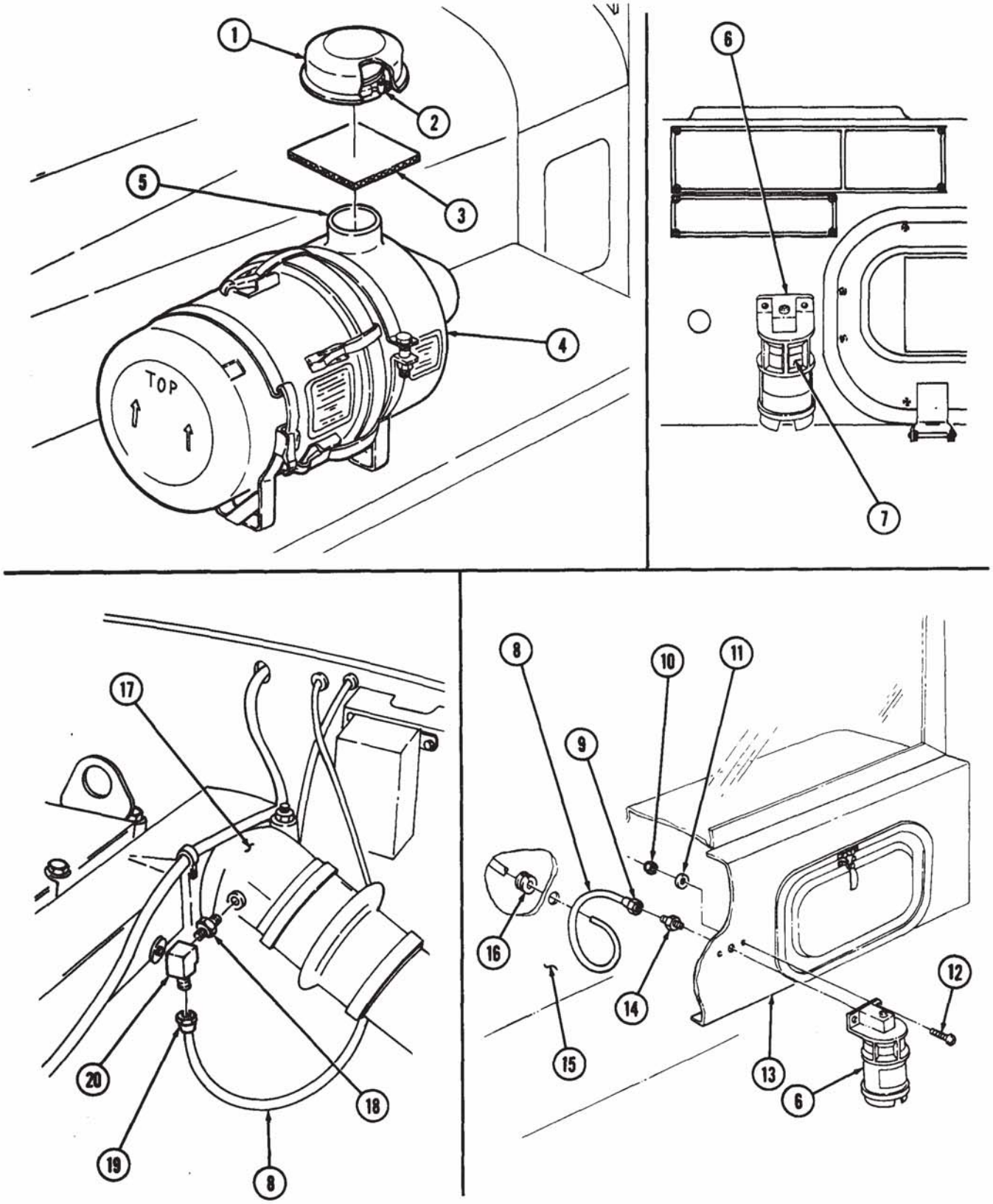

3-18. AIR CLEANER INDICATOR MAINTENANCE (Contd)

c. Cleaning and Inspection

WARNING

Compressed air source will not exceed 30 psi (207 kPa). When cleaning with compressed air, eyeshields must be worn. Failure to wear eyeshields may result in injury to personnel.

1. Clean air cleaner indicator tube (5) and indicator filter (2) with compressed air.
2. Inspect air cleaner indicator tube (5) for obstructions, kinks, cracks, and breaks. Replace if defective.
3. Inspect adapter (12), nuts (6) and (3), elbow (4), and indicator filter (2) for stripped threads. Replace if threads are stripped.

d. Installation

1. Apply antiseize tape to male threads of elbow (4) and adapter (12) before installation.
2. Install grommet (14) and air cleaner indicator tube (5) in firewall (13).
3. Install indicator filter (2) in intake manifold (1).

NOTE

Indicator filter must be installed with filter disc toward manifold.

4. Install elbow (4) on indicator filter (2).
5. Connect nut (3) to elbow (4).
6. Install air cleaner indicator (10) on dash panel (11) with two screws (9), washers (8), and new locknuts (7).
7. Install adapter (12) on air cleaner indicator (10).
8. Connect nut (6) to adapter (12).

3-18. AIR CLEANER INDICATOR MAINTENANCE (Contd)

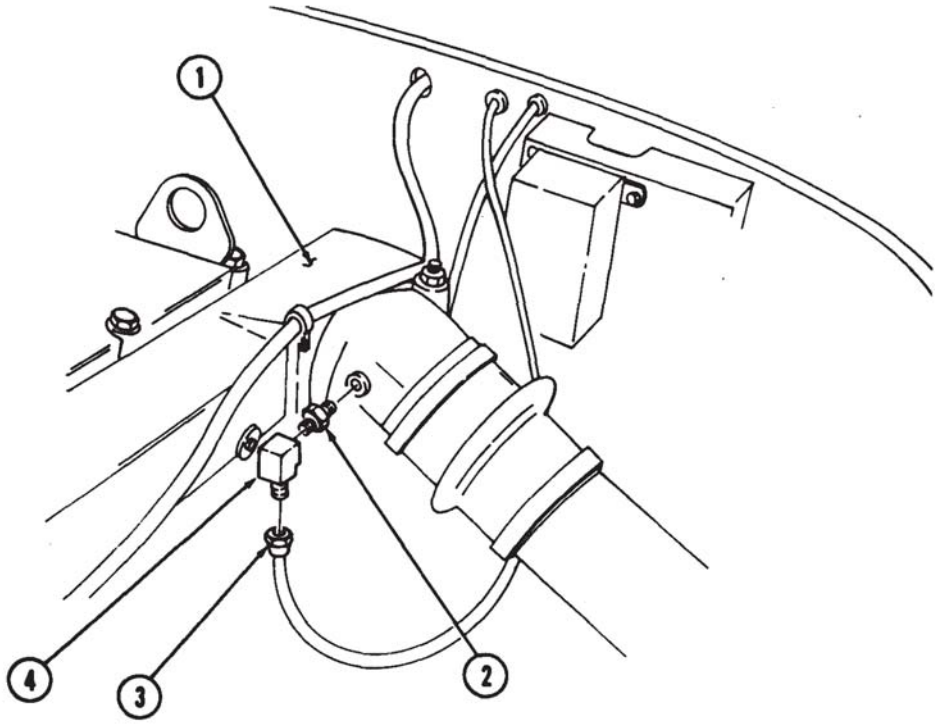

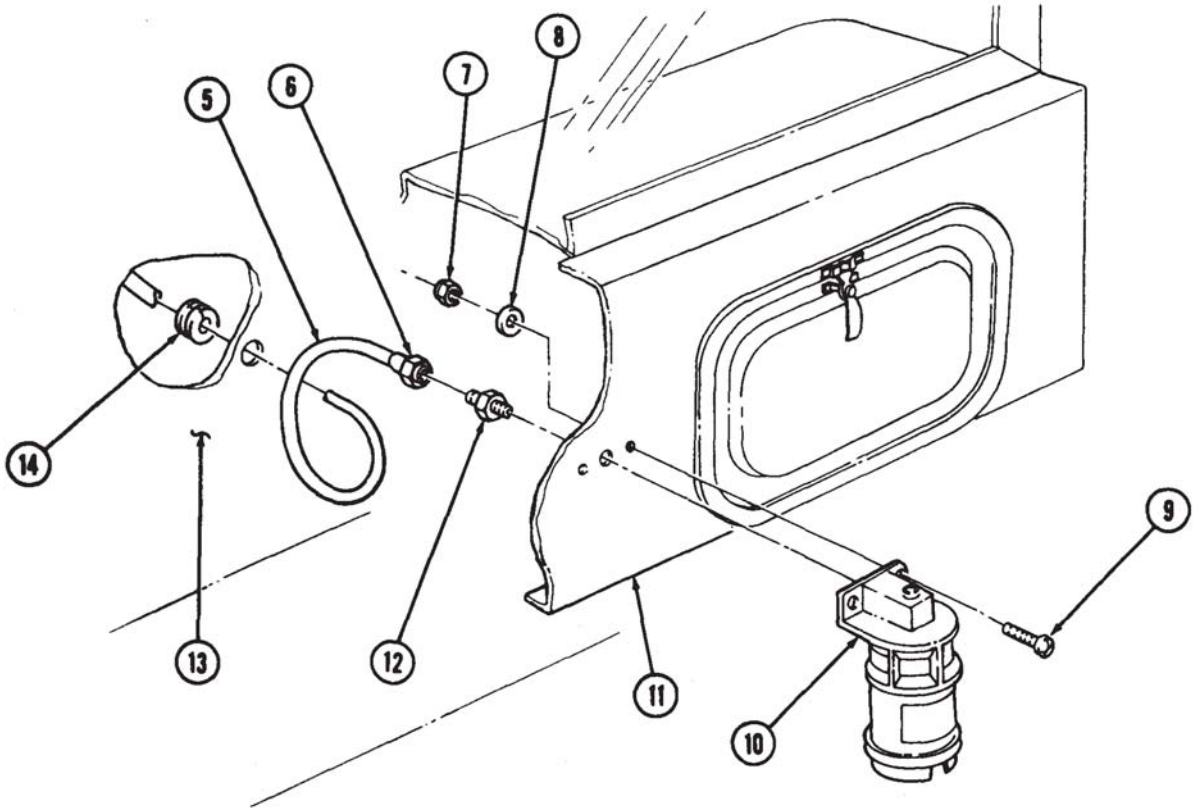

Section IV. FUEL SYSTEM MAINTENANCE

3-19. GENERAL

a. For fabrication instructions of fuel lines, refer to TM 9-243. When replacing air lines, note the location and position of mounting hardware. Replace any missing or broken mounting hardware (TM 9-2320-260-20P).

b. For schematic representation of fuel line locations and routing, see appendix E of this manual.

3-20. FUEL SYSTEM MAINTENANCE INDEX

PARA. NO.	TITLE	PAGE NO.
3-21.	Selector Valve Flex Hose Replacement	3-32
3-22.	Selector Valve and Mounting Bracket Maintenance	3-34
3-23.	Fuel Supply and Return Tubes Replacement	3-36
3-24.	Fuel Tank Maintenance	3-40
3-25.	Fuel Tank Straps and Hangers Maintenance	3-46
3-26.	Fuel Filter/Water Separator Maintenance	3-48
3-27.	Fuel Pump Filter Replacement (VS, MVS)	3-52
3-28.	Fuel Pump Filter Replacement (AFC)	3-54
3-29.	Primer Pressure Gage Replacement	3-55
3-30.	Preheater Nozzle and Glow Plug Replacement	3-60
3-31.	Preheater Primer Pump Replacement	3-62
3-32.	Cold Start Indicator and Lamp Replacement	3-64
3-33.	Cold Start Resistor Replacement	3-66
3-34.	Cold Start Replay Replacement	3-67

3-21. SELECTOR VALVE FLEX HOSE REPLACEMENT

THIS TASK COVERS:

a. Removal **b. Installation**

INITIAL SETUP

APPLICABLE MODELS
M816, M817, M818

MATERIALS/PARTS
Cap and plug set (Appendix C, Item 9)
Antiseize tape (Appendix C, Item 30)

REFERENCES (TM)
TM 9-2320-260-10
TM 9-2320-260-20P

EQUIPMENT CONDITION
- Parking brake set (TM 9-2320-260-10).
- Toolbox removed (para. 11-29).

GENERAL SAFETY INSTRUCTIONS
Diesel fuel is flammable. Do. not perform this task near fire, flame, or sparks.

3-21. SELECTOR VALVE FLEX HOSE REPLACEMENT (Contd)

a. Removal

WARNING

Diesel fuel is flammable. Do not perform this task near fire, flame, or sparks. Injury to personnel may result.

CAUTION

Cap or plug all hoses, connections, and openings immediately after disconnection or component removal to prevent contamination. Failure to do so may result in damage to equipment.

NOTE

- All flex hoses are removed and installed the same. The following procedures shown are for one flex hose.
- All hoses must first be disconnected at fuel lines.
- Have container ready to catch fuel drainage.

1. Disconnect flex hose (4) from fuel line (2).
2. Cover open fuel line (2) with plug (3).
3. Disconnect flex hose (4) from elbow (1).

b. Installation

1. Apply antiseize tape to male threads of elbow (1) and flex hose (4).
2. Connect flex hose (4) to elbow (1).
3. Remove plug (3) from fuel line (2) and connect flex hose (4) to fuel line (2).

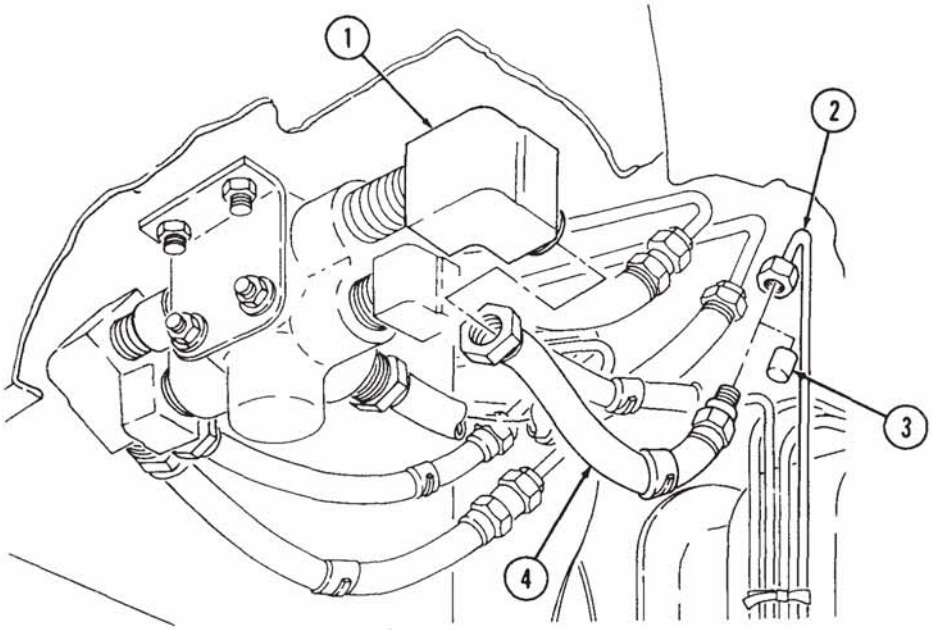

FOLLOW-ON TASKS: • Install toolbox (para. 11-29).
• Start engine (TM 9-2320-260-10) and check for leaks.

3-22.. SELECTOR VALVE AND MOUNTING BRACKET MAINTENANCE

THIS TASK COVERS:

a. Removal
b. Inspection
c. Installation

INITIAL SETUP

APPLICABLE MODELS
M816, M817, M818

MATERIALS/PARTS
Two lockwashers
Two locknuts
Antiseize tape (Appendix C, Item 30)

REFERENCES (TM)
TM 9-2320-260-10
TM 9-2320-260-20P

EQUIPMENT CONDITION
- Parking brake set (TM 9-2320-260-10).
- Selector valve flex hoses removed (para. 3-21).

GENERAL SAFETY INSTRUCTIONS
Diesel fuel is flammable. Do not perform this task near fire, flame, or sparks.

WARNING

Diesel fuel is flammable. Do not perform this task near fire, flame, or sparks. Injury to personnel may result.

a. Removal

1. Remove screw (2), lockwasher (3), and lever (4) from selector valve (7).
2. Remove two locknuts (11), screws (1), identification plate (5), and mounting bracket (6) from cab floor (13). Discard locknuts (11).
3. Remove two screws (10), lockwashers (9), and selector valve (7) from mounting bracket (6). Discard lockwashers (9).
4. Remove six elbows (8) and nipple (12) from selector valve (7).

b. Inspection

1. Install lever (4) on valve (7) with screw (2). Turn lever (4) left, then right, while checking valve for nicks and burrs. Replace valve (7) if nicked or burred.
2. Remove screw (2) and lever (4) from valve (7).
3. Inspect nipple (12) and six elbows (8) for stripped threads. Replace if damaged.

c. Installation

1. Apply antiseize tape to male threads of elbows (8).
2. Install nipple (12) and six elbows (8) on selector valve (7).
3. Install selector valve (7) on mounting bracket (6) with two new lockwashers (9) and screws (10).
4. Position identification plate (5) and mounting bracket (6) on cab floor (13) and install with two screws (1) and new locknuts (11).
5. Install lever (4) on selector valve (7) with lockwasher (3) and screw (2).

3-22. SELECTOR VALVE AND MOUNTING BRACKET MAINTENANCE (Contd)

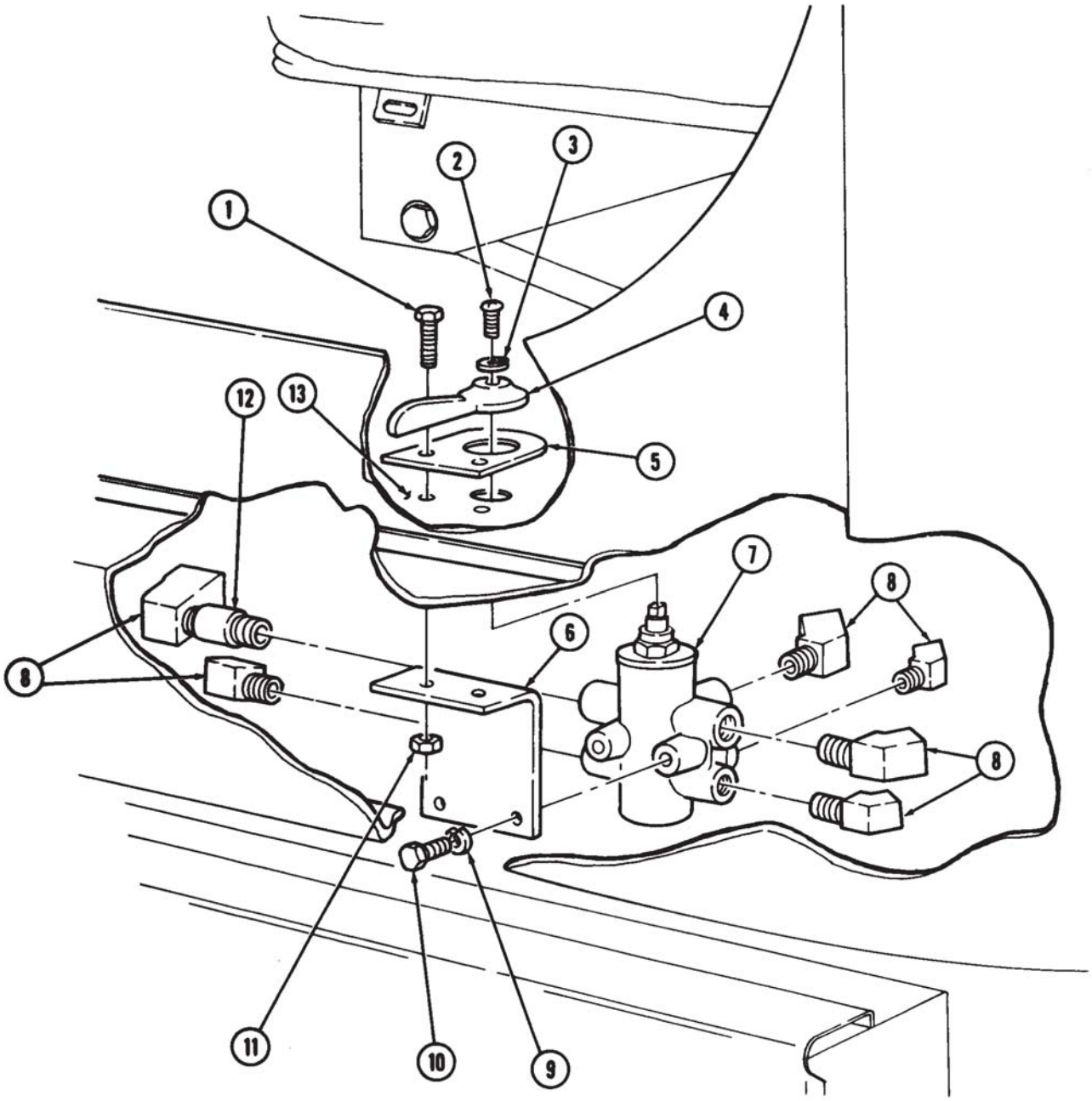

FOLLOW-ON TASKS: • Install selector valve flex hoses (para. 3-21).
• Start engine (TM 9-2320-260-10) and check for leaks.

3-23. FUEL SUPPLY AND RETURN TUBES REPLACEMENT

THIS TASK COVERS:

a. Removal

b. Installation

INITIAL SETUP

APPLICABLE MODELS

All

MATERIALS/PARTS

Two locknuts
Five lockwashers
Antiseize tape (Appendix C, Item 30)

REFERENCES (TM)

TM 9-2320-260-10
TM 9-2320-260-20P

EQUIPMENT CONDITION

- Parking brake set (TM 9-2320-260-10).
- Hood raised and secured (TM 9-2320-260-10).

GENERAL SAFETY INSTRUCTIONS

Diesel fuel is flammable. Do not perform this task near fire, flame, or sparks.

a. Removal

WARNING

Diesel fuel is flammable. Do not perform this task near fire, flame, or sparks. Injury to personnel may result.

NOTE

- Fuel supply and return tubes are replaced basically the same for early and late model engines. This procedure is for late model engines.
- Have drainage container ready to catch fuel.

1. Remove two locknuts (7), screws (2), washers (1), screws (3), washers (4), and bracket (5) from engine (6) and radiator mount (8). Discard locknuts (7).
2. Disconnect supply tube (10) and return tube (9) from elbows (16) and (17).
3. Remove screw (15), lockwasher (14), washer (13), spacer (11), clamp (12), and supply tube (10) from engine (6). Discard lockwasher (14).
4. Remove elbows (16) and (17) from engine (6).
5. Disconnect supply tube (10) from fuel shutoff valve (32).
6. Disconnect return tube (9) from tee (21).
7. Disconnect bypass tube (26) from elbow (31) and tee (21).
8. Remove screw (25), lockwasher (24), washer (23), spacer (27), clamp (22), and bypass tube (26) from bracket (30). Discard lockwasher (24).
9. Remove screw (28), lockwasher (29), and bracket (30) from engine (6). Discard lockwasher (29).
10. Remove two nuts (20), lockwashers (19), screws (33), and four retaining straps (18) from supply tube (10) and return tube (9). Discard lockwashers (19).

3-23. FUEL SUPPLY AND RETURN TUBES REPLACEMENT (Contd)

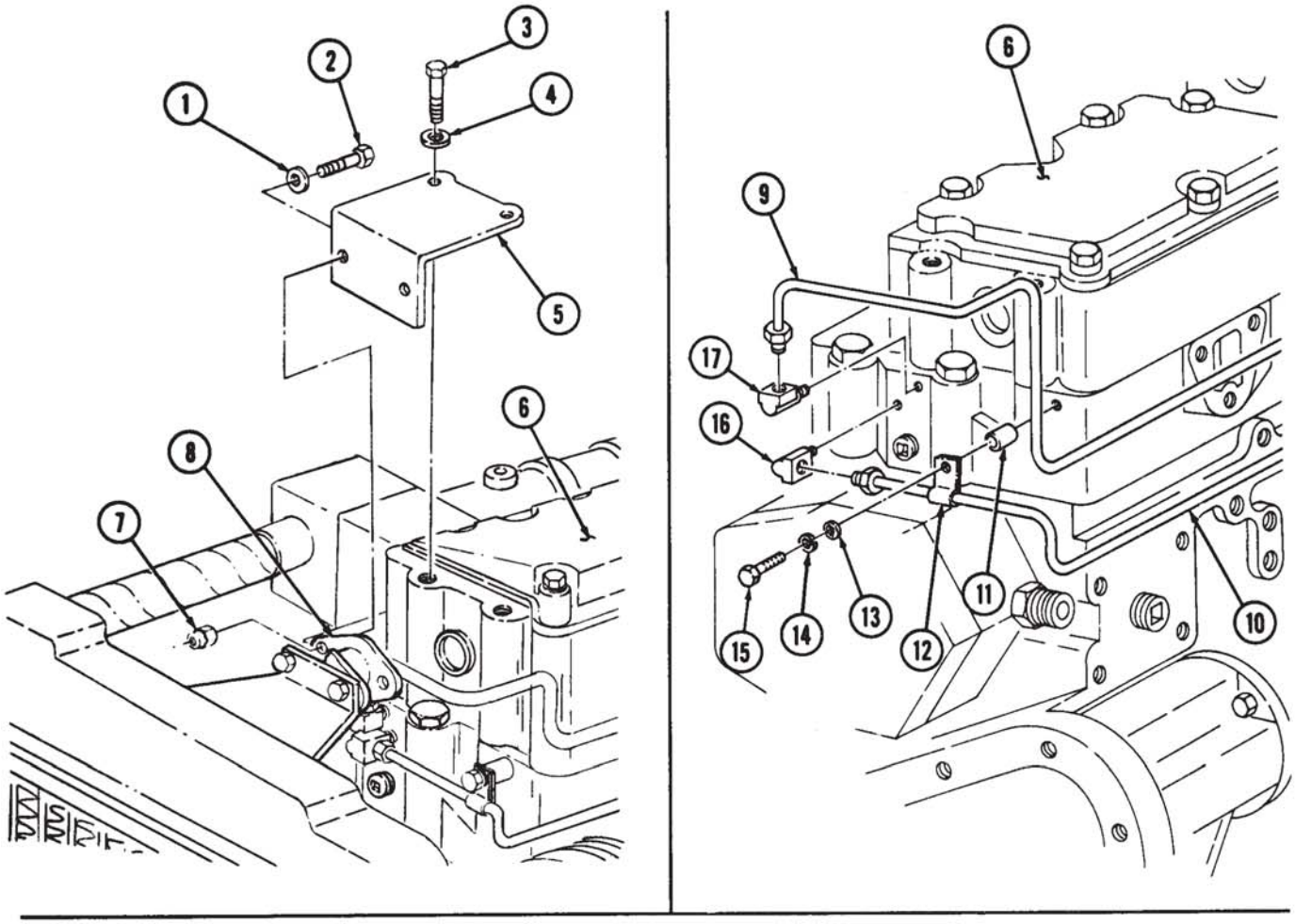

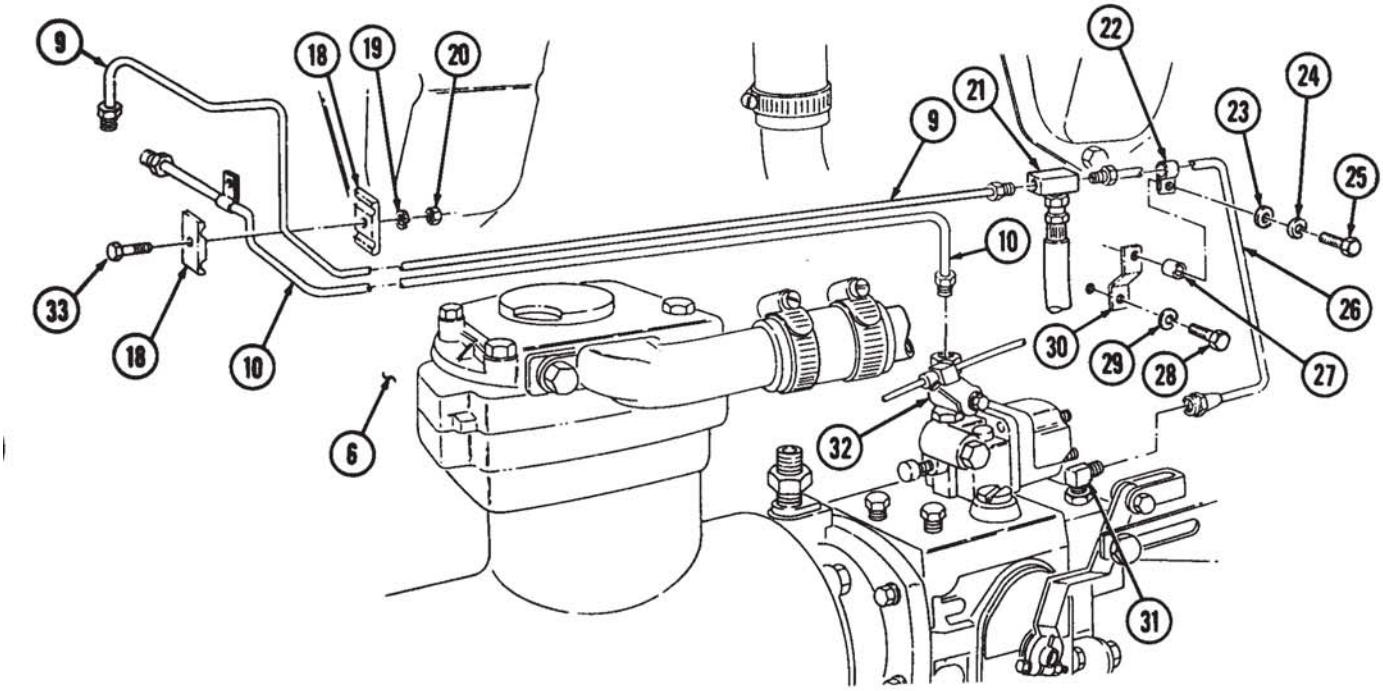

3-23. FUEL SUPPLY AND RETURN TUBES REPLACEMENT (Contd)

b. Installation

1. Apply antiseize tape to male threads of elbows (15), (25), and (26), supply tube (17), return tube (1), and bypass tube (10).
2. Install four retaining straps (2) on supply tube (17) and return tube (1) with two screws (19), new lockwashers (3), and nuts (4).
3. Install bracket (14) on engine (18) with new lockwasher (13) and screw (12).
4. Connect return tube (1) on tee (5).
5. Connect bypass tube (10) on elbow (15) and tee (5).
6. Connect supply tube (17) on fuel shutoff valve (16).
7. Install bypass tube (10) on bracket (14) with clamp (6), spacer (11), washer (7), new lockwasher (8), and screw (9).
8. Install elbows (25) and (26) on engine (18).
9. Connect supply tube (17) and return tube (1) on elbows (25) and (26).
10. Install supply tube (17) on engine (18) with clamp (21), spacer (20), washer (22), new lockwasher (23), and screw (24).
11. Install bracket (29) on radiator mount (31) and engine (18) with two washers (28), screws (27), washers (32), screws (33), and new locknuts (30).

3-23. FUEL SUPPLY AND RETURN TUBES REPLACEMENT (Contd)

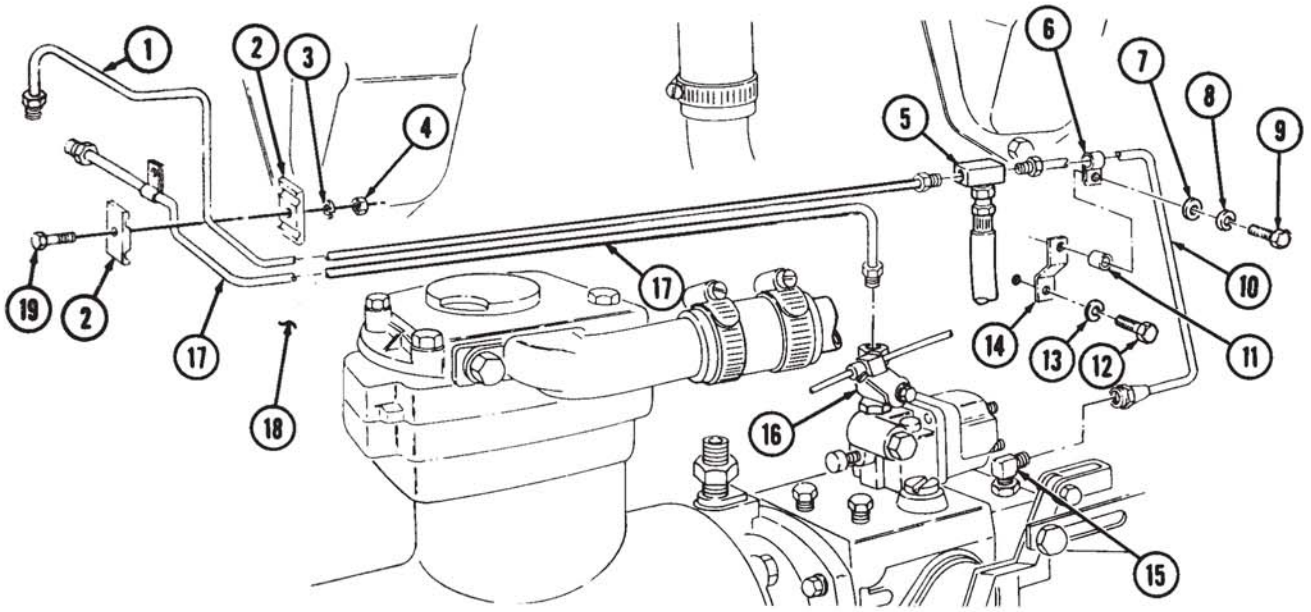

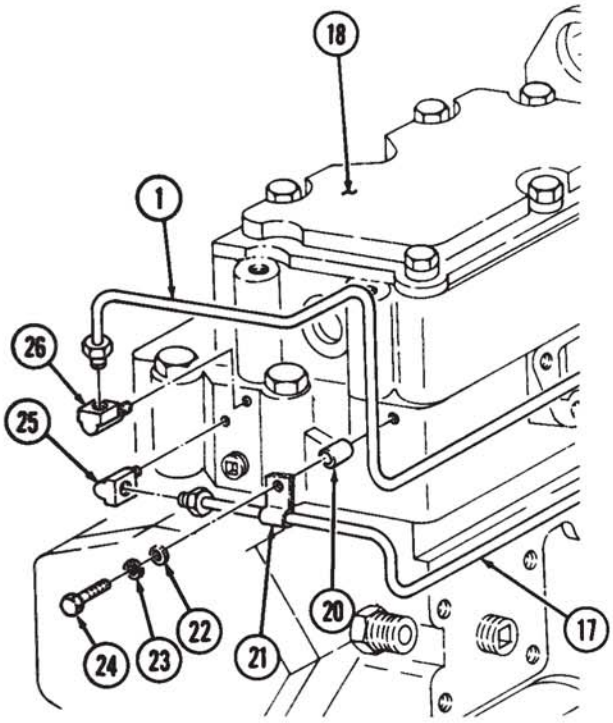

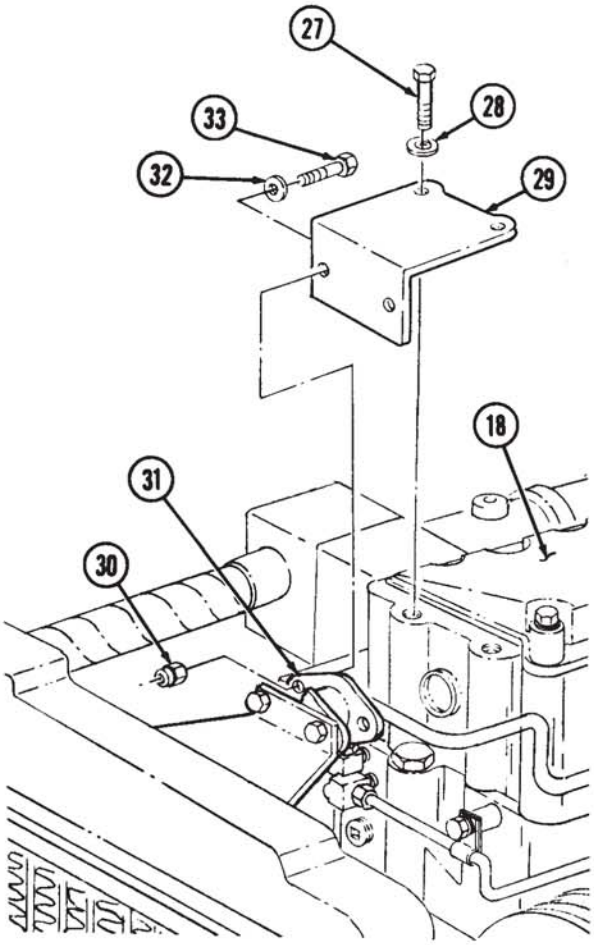

3-24. FUEL TANK MAINTENANCE

THIS TASK COVERS:

a. Draining
b. Removal
c. Disassembly
d. Cleaning and Inspection
e. Assembly
f. Installation

INITIAL SETUP

APPLICABLE MODELS
All

MATERIALS/PARTS
Four locknuts
Three gaskets
Antiseize tape (Appendix C, Item 30)

REFERENCES (TM)
TM 9-2320-260-10
TM 9-2320-260-20P

EQUIPMENT CONDITION
- Parking brake set (TM 9-2320-260-10).
- Battery ground cables disconnected (para. 4-48).
- Front outrigger legs extended (M816 and M819) (TM 9-2320-260-10).
- Deckplates removed (M818) (para. 12-76).

GENERAL SAFETY INSTRUCTIONS
Diesel fuel is flammable. Do not perform this task near fire, flame, or sparks.

WARNING

Diesel fuel is flammable. Do not perform this task near fire, flame, or sparks. Injury to personnel may result.

NOTE

Left and right fuel tank maintenance procedures are the same. This procedure covers the left fuel tank.

a. Draining

1. Remove filler cap (1) and filler tube (2) from fuel tank (3).
2. Using pump, remove fuel from fuel tank (3).

NOTE

- Have drainage container ready to catch fuel.
- Do not perform step 4 if removing or repairing fuel tank.

3. Remove drainplug (4) and gasket (5) from fuel tank (3) and allow fuel to drain completely. Discard gasket (5).
4. Wrap threads of drainplug (4) with antiseize tape and install new gasket (5) and drainplug (4) on fuel tank (3).

b. Removal

1. Disconnect lead (6) from fuel level sending unit (7).
2. Disconnect two vent tubes (12) from two elbows (13).
3. Disconnect fuel return tube (15) from elbow (16).
4. Disconnect fuel pickup tube (8) from vent cover fitting (9).
5. Remove two screws (10), washers (11), vent tubes (12), and four clamps (14) from fuel tank (3).

NOTE

Perform step 6 for M820, M820A1, and M820A2 vehicles.

6. Disconnect van body heater pickup hose (17) from connector (18).

3-24. FUEL TANK MAINTENANCE (Contd)

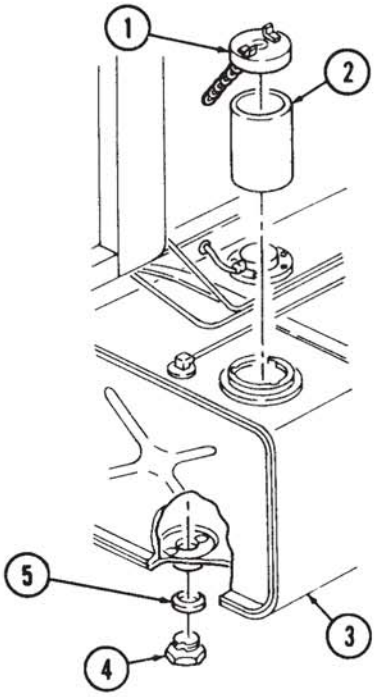

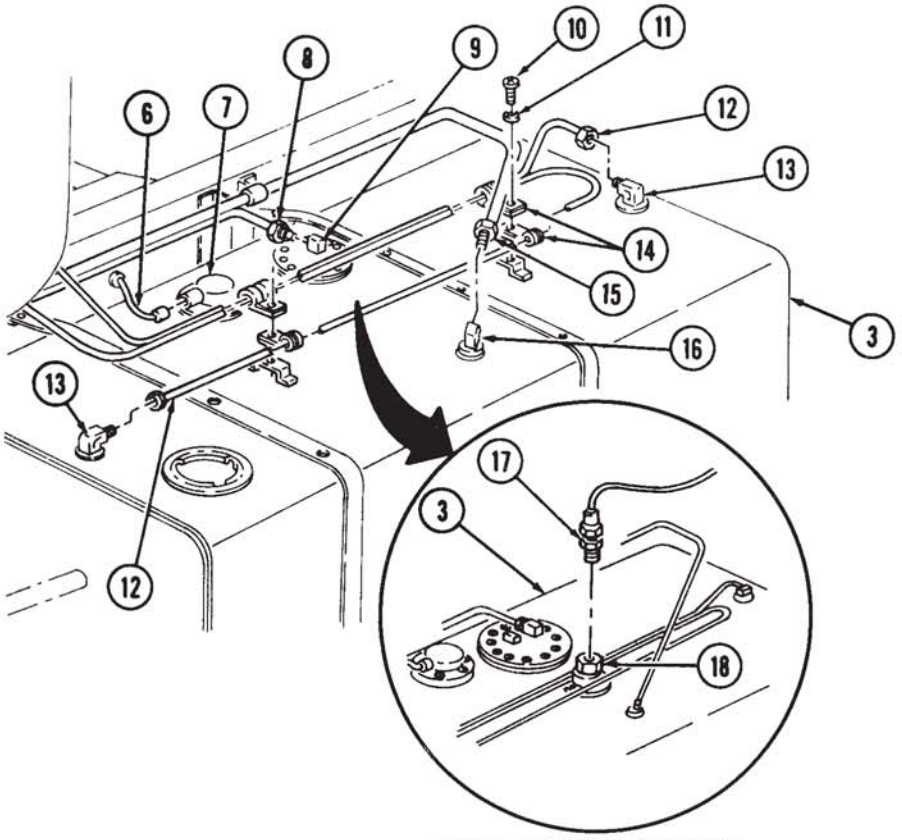

M820, M820A1, M820A2

3-24. FUEL TANK MAINTENANCE (Contd)

NOTE

Perform step 7 for M817 vehicles.

7. Remove two locknuts (5), screws (3), and brace (2) from protector plate (1) and protector bracket (4). Discard locknuts (5).
8. Remove two locknuts (7) and disconnect fuel tank straps (6) from fuel tank hangers (9). Discard locknuts (7).

NOTE

Assistant will help with step 9.

9. Remove fuel tank (8) from fuel tank hangers (9).

c. Disassembly

1. Remove two vent elbows (14) from fuel tank (8).
2. Remove fuel return elbow (21) from fuel tank (8).
3. Remove five screws (11), washers (12), fuel level sending unit (10), and gasket (13) from fuel tank (8). Discard gasket (13).
4. Remove twelve screws (15), washers (16), vent cover (17), and gasket (18) from fuel tank (8). Discard gasket (18).

NOTE

Perform step 5 for M820, M820A1, and M820A2 vehicles.

5. Remove van heater hose connector (24) from fuel tank (8).

d. Cleaning and Inspection

1. Inspect all tank fittings for stripped threads. Replace fittings if damaged.
2. Clean and inspect fuel tank (8) for cracks, holes, and stripped threads. Replace fuel tank (8) if cracked, holes are present, or threads are stripped.

e. Assembly

1. Apply antiseize tape to threads of drain plug (22).
2. Install new gasket (23) and drainplug (22) in fuel tank (8), if not previously done.
3. Install filler tube (20) and filler cap (19) in fuel tank (8).
4. Install new gasket (18) and vent cover (17) on fuel tank (8) with twelve washers (16) and screws (15).
5. Install new gasket (13) and fuel level sending unit (10) on fuel tank (8) with five washers (12) and screws (11).

NOTE

Perform step b for M820, M820A1, and M820A2 vehicles.

6. Install van heater hose connector (24) on fuel tank (8).
7. Apply antiseize tape to male threads of elbows (14) and (21).
8. Install fuel return elbow (21) on fuel tank (8).
9. Install two vent elbows (14) on fuel tank (8).

3-24. FUEL TANK MAINTENANCE (Contd)

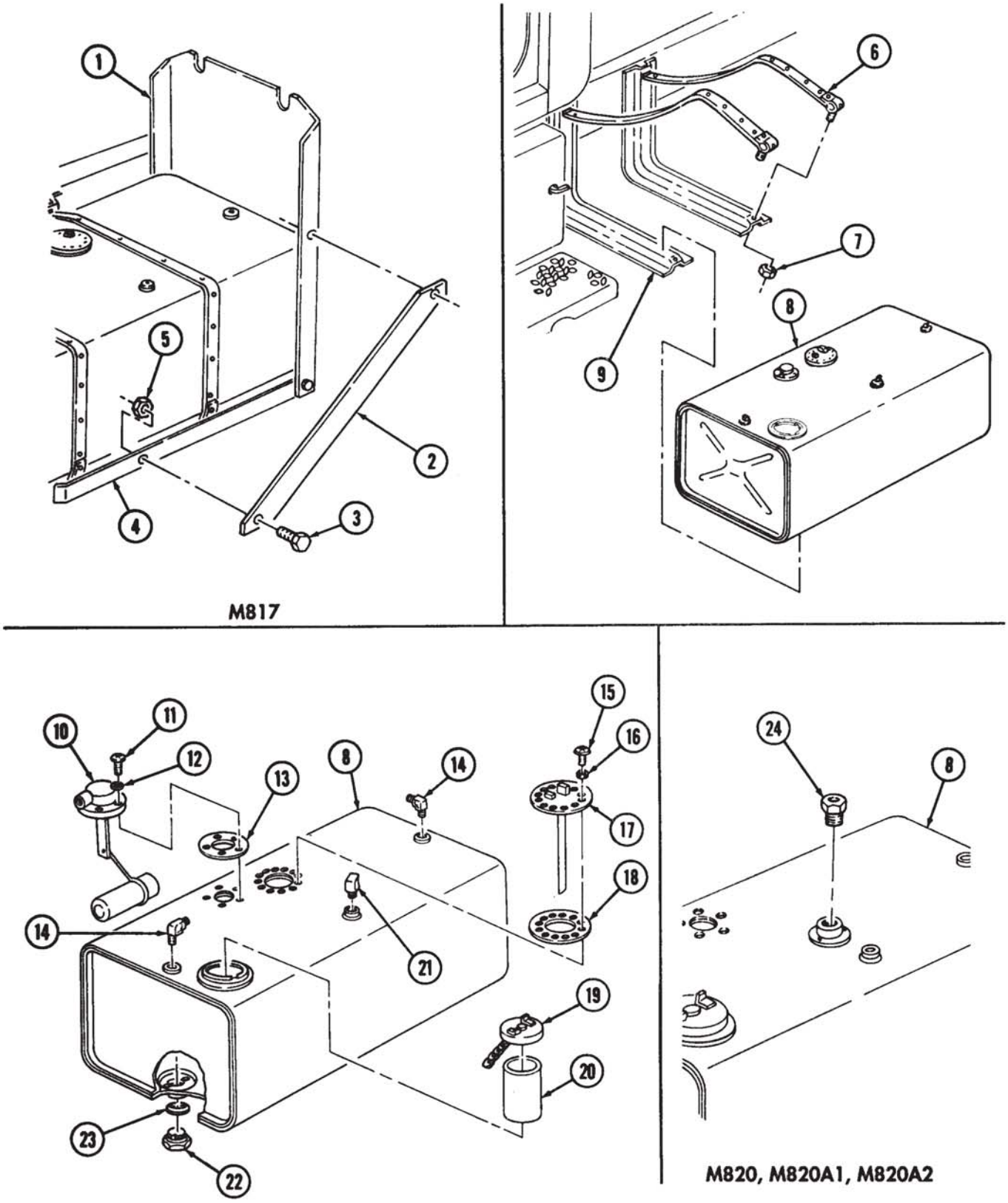

3-24. FUEL TANK MAINTENANCE (Contd)

f. Installation

NOTE

Assistant will help with step 1.

1. Install fuel tank (4) on fuel tank hangers (2).
2. Install two fuel tank straps (1) on fuel tank hangers (2) with two new locknuts (3).

NOTE

Perform step 3 for M817 vehicles.

3. Install brace (6) on protector plate (5) and protector bracket (8) with two screws (7) and new locknuts (9).
4. Apply antiseize tape to male threads of pickup tube (12) and return tube (15).
5. Connect pickup tube (12) to fitting on vent cover (13).
6. Connect return tube (15) to elbow (20).
7. Connect two vent tubes (18) to two elbows (19).
8. Install four clamps (14) on fuel tank (4) with two washers (17) and screws (16).
9. Connect electrical lead (10) to fuel level sending unit (11).

NOTE

Perform steps 10 and 11 for M820, M820A1, and M820A2 vehicles.

10. Apply antiseize tape to male threads of van body heater pickup hose (21).
11. Connect van body heater pickup hose (21) to connector (22).

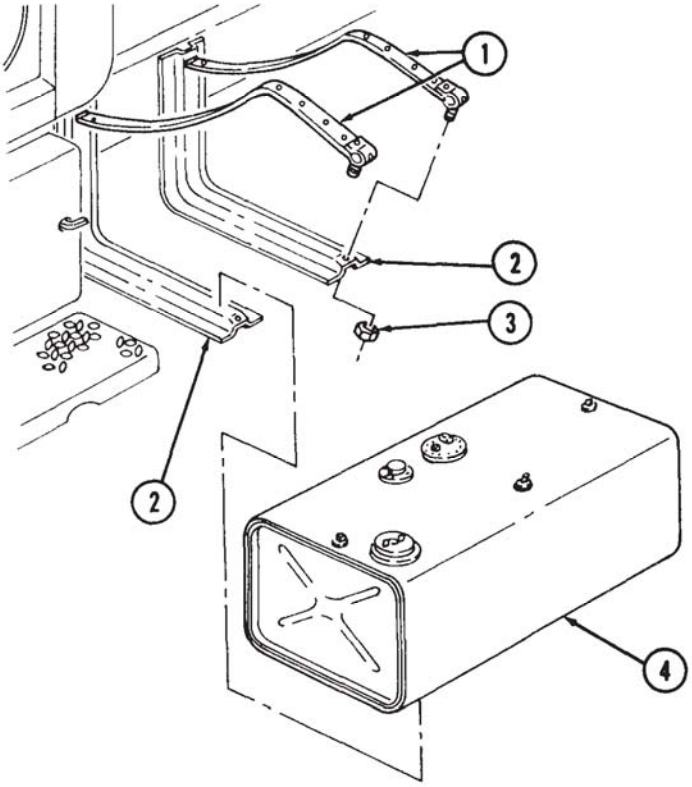

3-24. FUEL TANK MAINTENANCE (Contd)

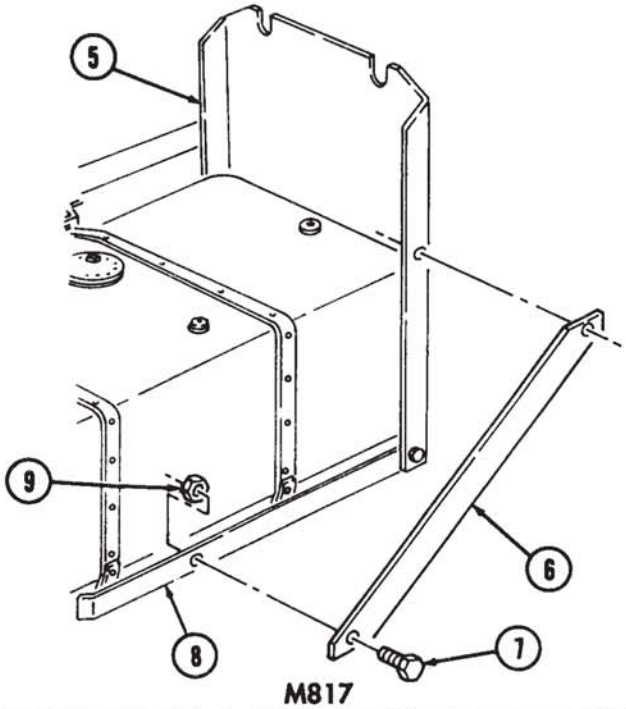

M817

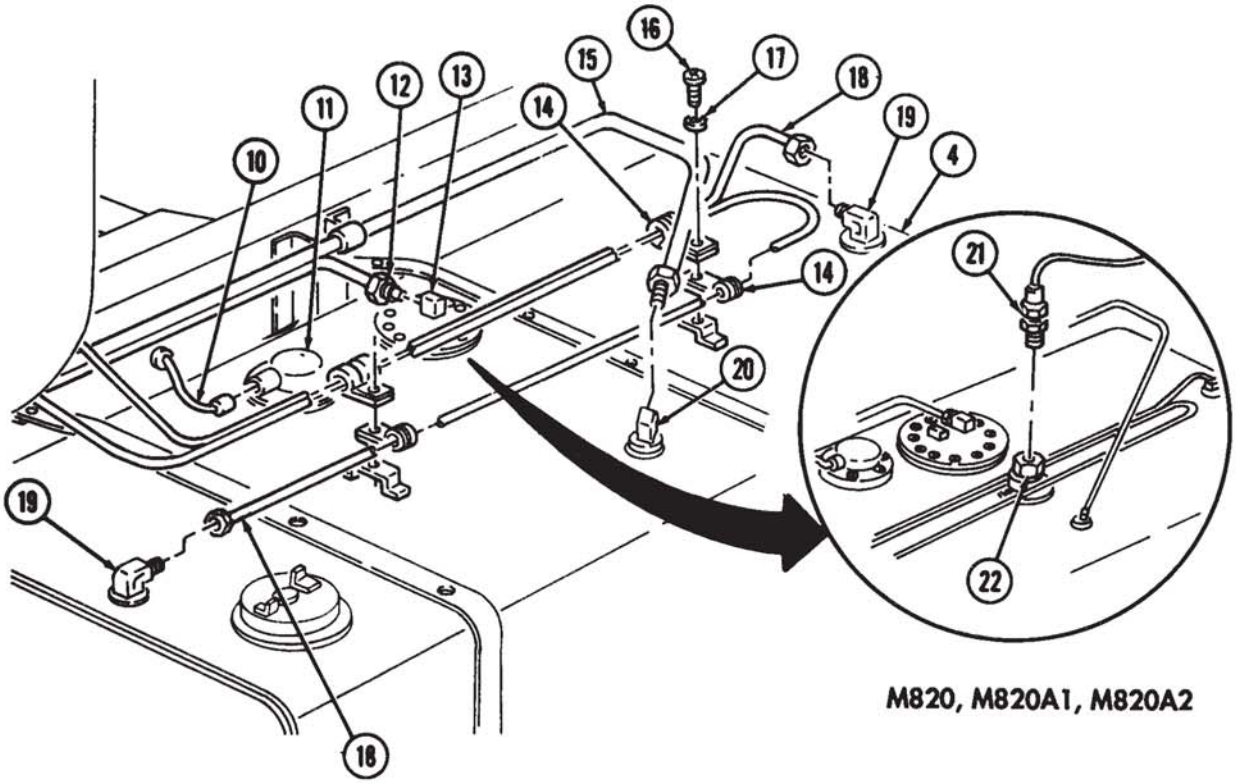

M820, M820A1, M820A2

FOLLOW-ON TASKS:
- Connect battery ground cables (para. 4-48).
- Raise and retract front outriggers (M816 and M819) (TM 9-2320-260-10).
- Install deckplates (M818) (para. 12-76).

3-25. FUEL TANK STRAPS AND HANGERS MAINTENANCE

THIS TASK COVERS:

a. **Removal**
b. **Inspection**
c. **Installation**

INITIAL SETUP

APPLICABLE MODELS
All

MATERIALS/PARTS
Seventeen locknuts

REFERENCES (TM)
TM 9-2320-260-10
TM 9-2320-260-20P

EQUIPMENT CONDITION
- Parking brake set (TM 9-2320-260-10).
- Fuel tank removed (para. 3-24).

NOTE

Left and right fuel tank hangers and straps maintenance procedures are the same. This procedure covers left fuel tank hangers and straps.

a. Removal

1. Remove two locknuts (11), screws (9), and fuel tank straps (2) from fuel tank hangers (5). Discard locknuts (11).

NOTE

Perform step 2 for M821 vehicles.

2. Remove four locknuts (8), screws (6), and shield (7) from fuel tank hangers (5). Discard locknuts (8).

NOTE

Perform steps 3 and 4 for M817 vehicles.

3. Remove locknut (15) and screw (13) from protector bracket (14) and protector plate (12). Discard locknut (15).
4. Remove two locknuts (17), screws (16), and protector plate (12) from fuel tank hanger (5). Discard locknuts (17).
5. Remove eight locknuts (1), screws (4), and two fuel tank hangers (5) from frame (10). Discard locknuts (1).

b. Inspection

Inspect fuel tank hangers (5) and straps (2) for worn and deteriorated felt liners (3). Replace if worn or deteriorated.

c. Installation

1. Install two fuel tank hangers (5) on frame (10) with eight screws (4) and new locknuts (1).

NOTE

Perform steps 2 and 3 for M817 vehicles.

2. Install protector plate (12) on fuel tank hanger (5) with two screws (16) and new locknuts (17).
3. Install protector plate (12) on protector bracket (14) with screw (13) and new locknut (15).

3-25. FUEL TANK STRAPS AND HANGERS MAINTENANCE (Contd)

NOTE

Perform step 4 for M821 vehicles.

4. Install shield (7) on fuel tank hangers (5) with four screws (6) and new locknuts (8).
5. Install two fuel tank straps (2) on fuel tank hangers (5) with two screws (9) and new locknuts (11).

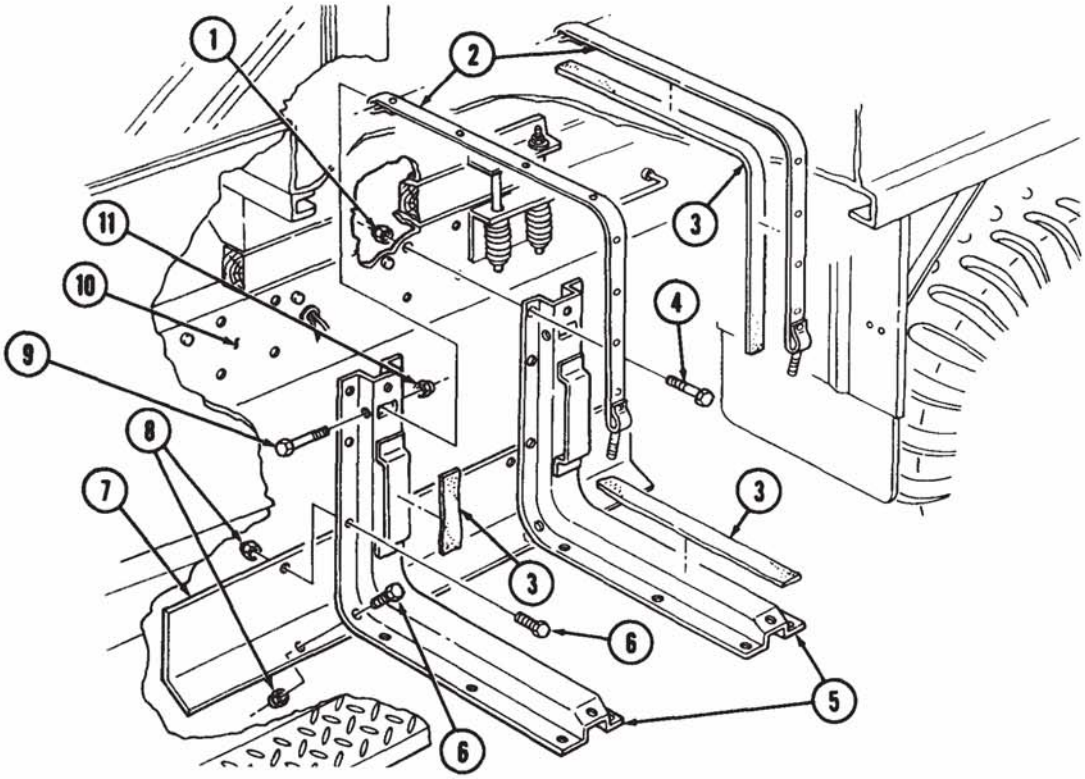

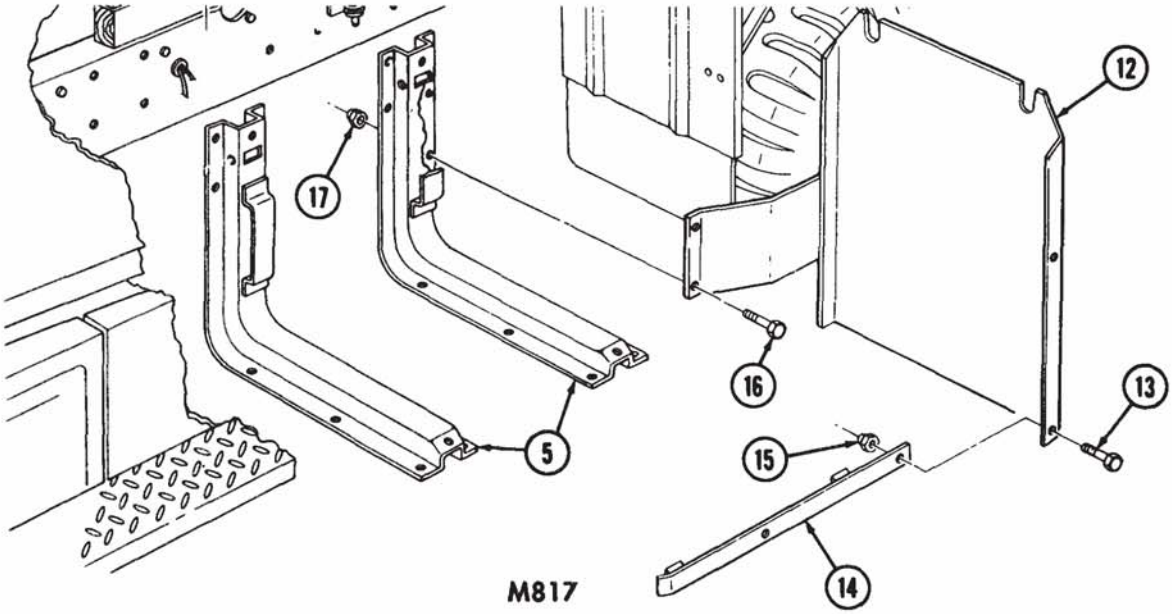

M817

FOLLOW-ON TASK: Install fuel tank (para. 3-24).

3-26. FUEL FILTER/WATER SEPARATOR MAINTENANCE

THIS TASK COVERS:

a. Fuel Drainage
b. Filter Element Removal
c. Filter Head Removal
d. Cleaning and Inspection
e. Filter Head Installation
f. Filter Element Installation

INITIAL SETUP

APPLICABLE MODELS
All

MATERIALS/PARTS
Fuel filter replacement kit, SA910070
Seven locknuts
O-ring
Preformed packing
Lint-free cloth (Appendix C, Item 12)
Antiseize tape (Appendix C, Item 30)
Drycleaning solvent (Appendix C, Item 29)

REFERENCES (TM)
TM 9-2320-260-10
TM 9-2320-260-20P

EQUIPMENT CONDITION
Parking brake set (TM 9-2320-260-10).

GENERAL SAFETY INSTRUCTIONS
- Diesel fuel is flammable. Do not perform this task near fire, flame, or sparks.
- Keep fire extinguisher nearby when using drycleaning solvent.

WARNING

Diesel fuel is flammable. Do not perform this task near fire, flame, or sparks. Injury to personnel may result.

a. Fuel Drainage

NOTE

Have drainage container ready to catch fuel.

Open filter inlet drain valve (8) and fuel filter drain valve (15). Allow fuel to drain completely and close drain valves (8) and (15).

b. Filter Element Removal

1. Loosen center bolt (4) and remove filter body (14).
2. Remove retaining ring (12), preformed packing (6), washer (5), and center bolt (4) from filter head (10). Discard preformed packing (6).
3. Remove O-ring (11) from filter head (10). Discard O-ring (11).
4. Remove filter element (13) from filter body (14). Discard filter element (13).
5. Remove fuel filter drain valve (15) from filter body (14).

c. Filter Head Removal

1. Disconnect fuel supply line tube (20) from filter inlet tee (7).
2. Disconnect fuel supply line hose (19) from elbow (16).
3. Remove three locknuts (1), screws (9), and filter head (10) from fuel filter bracket (2). Discard locknuts (1).
4. Remove four locknuts (18), screws (3), and fuel filter bracket (2) from crossmember (17). Discard locknuts (18).
5. Remove fuel inlet tee (7) from inlet port of filter head (10).

3-26. FUEL FILTER/WATER SEPARATOR MAINTENANCE (Contd)

6. Remove fuel inlet drain valve (8) from fuel inlet tee (7).
7. Remove elbow (16) from outlet port of filter head (10).

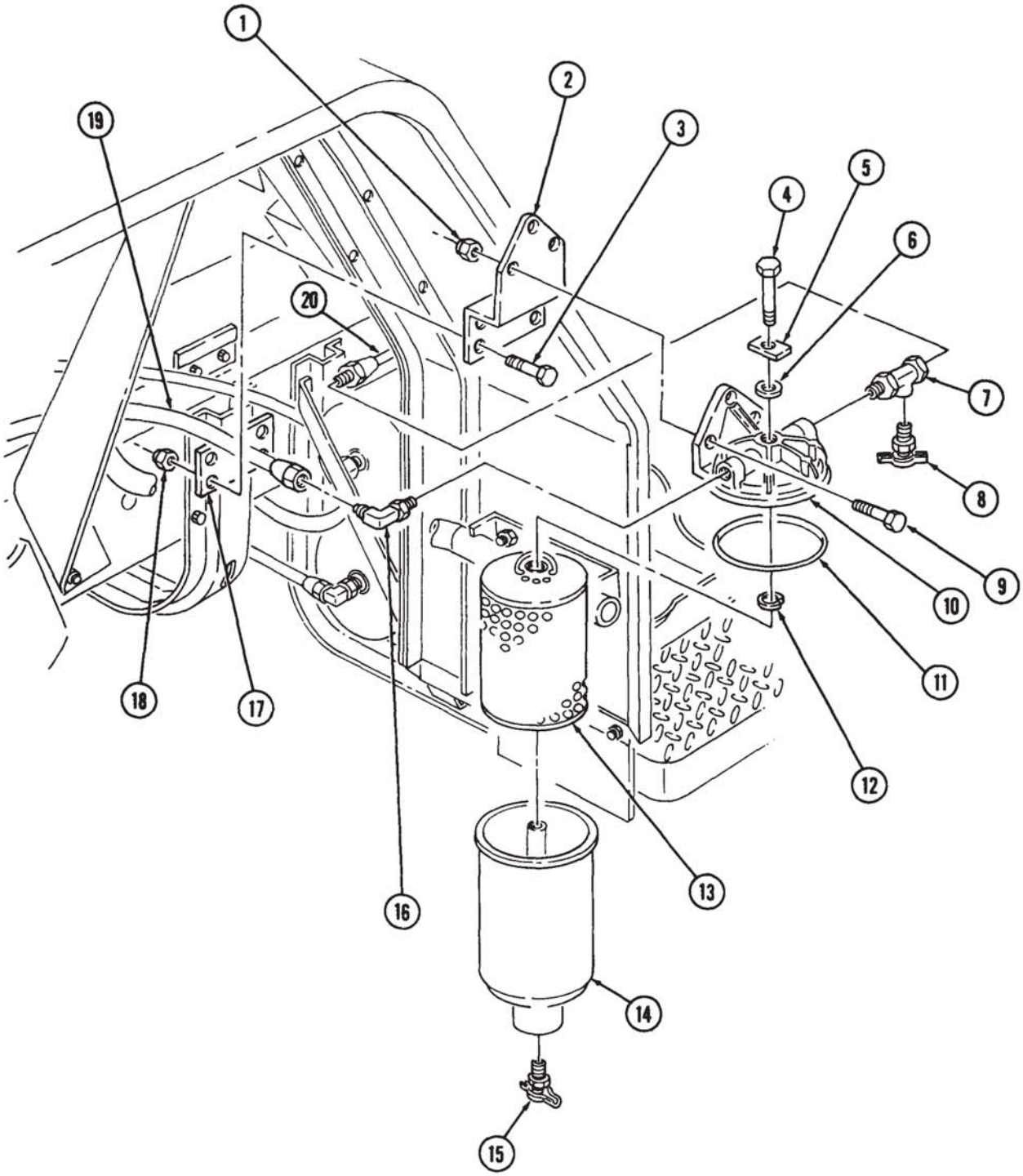

3-26. FUEL FILTER/WATER SEPARATOR MAINTENANCE (Contd)

d. Cleaning and Inspection

WARNING

Drycleaning solvent is flammable and will not be used near open flame. Use only in well-ventilated places. Keep fire extinguisher nearby. Failure to do so may result in injury to personnel.

1. Clean filter body (14) and filter head (10) with drycleaning solvent. Dry with lint-free cloth.
2. Inspect fuel filter drain valve (15), fuel inlet drain valve (8), fuel inlet tee (7), and elbow (16) for stripped and damaged threads. Replace if threads are stripped or damaged.

e. Filter Head Installation

1. Install fuel filter bracket (2) on crossmember (17) with four screws (3) and new locknuts (18).
2. Install filter head (10) on fuel filter bracket (2) with three screws (9) and new locknuts (1).
3. Apply antiseize tape to male threads of fuel inlet drain valve (8), fuel inlet tee (7), fuel supply line tube (20), and elbow (16).
4. Install fuel inlet drain valve (8) in fuel inlet tee (7).
5. Install fuel inlet tee (7) in inlet port of filter head (10).
6. Connect fuel supply line tube (20) to fuel inlet tee (7).
7. Install elbow (16) in outlet port of filter head (10).
8. Connect fuel supply line hose (19) to elbow (16).

f. Filter Element Installation

1. Install washer (5), new preformed packing (6), center bolt (4), and retaining ring (12) on filter head (10).
2. Install new O-ring (11) in filter head (10).

NOTE

Handle of fuel filter element must face filter head.

3. Install new filter element (13) in filter body (14).
4. Apply antiseize tape to male threads of fuel filter drain valve (15).
5. Install fuel filter drain valve (15) in filter body (14).
6. Install filter body (14) on filter head (10) with center bolt (4). Tighten center bolt (4) 20-25 lb-ft (27-34 N•m).

3-26. FUEL FILTER/WATER SEPARATOR MAINTENANCE (Contd)

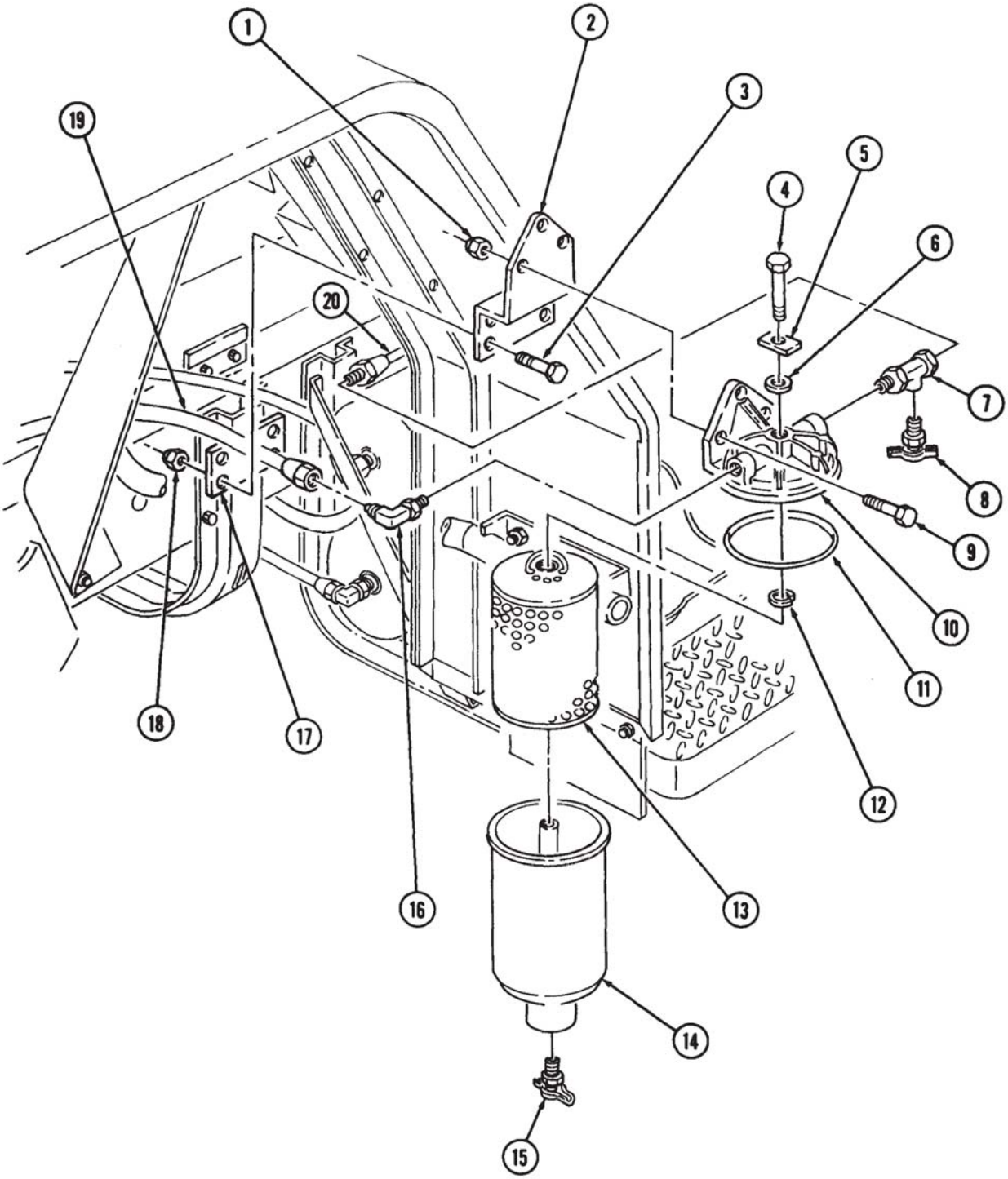

FOLLOW-ON TASKS: •Prime fuel system (TM 9-2320-260-10).
•Start engine (TM 9-2320-260-10) and check for leaks.

3-27. FUEL PUMP FILTER REPLACEMENT (VS, MVS)

THIS TASK COVERS:

a. VS Pump Filter Removal
b. VS Pump Filter Installation
c. MVS Pump Filter Removal
d. MVS Pump Filter Installation

INITIAL SETUP

APPLICABLE MODELS

M816, M819

MATERIALS/PARTS

Fluid pressure parts kit, AR 51436 (MVS)
O-ring (VS)
Filter element (VS)

REFERENCES (TM)

TM 9-2320-260-10
TM 9-2320-260-20P

EQUIPMENT CONDITION

- Parking brake set (TM 9-2320-260-10).
- Hood raised and secured (TM 9-2320-260-10).

GENERAL SAFETY INSTRUCTIONS

Diesel fuel is flammable. Do not perform this task near fire, flame, or sparks.

WARNING

Diesel fuel is flammable. Do not perform this task near fire, flame, or sparks. Injury to personnel may result.

a. VS Pump Filter Removal

Remove retaining ring (6), O-ring (5), cover (4), spring (3), and filter element (2) from fuel pump (1). Discard O-ring (5) and filter element (2).

b. VS Pump Filter Installation

Install new filter element (2), spring (3), cover (4), and new O-ring (5) on fuel pump (1) with retaining ring (6).

c. MVS Pump Filter Removal

Remove cap (7) with O-ring (8), spring (9), filter element (10), packing (14), retainer (13), and strainer element (12) from fuel pump (11). Discard cap (7), O-ring (8), spring (9), filter element (10), packing (14), retainer (13), and strainer element (12).

d. MVS Pump Filter Installation

NOTE

The fluid pressure parts kit, AR 51436, replaces all filter components of MVS fuel pumps.

1. Install O-ring (8) on cap (7).
2. Install strainer element (12), retainer (13), packing (14), filter element (10), and spring (9) in fuel pump (11) with cap (7).

3-27. FUEL PUMP FILTER REPLACEMENT (VS, MVS) (Contd)

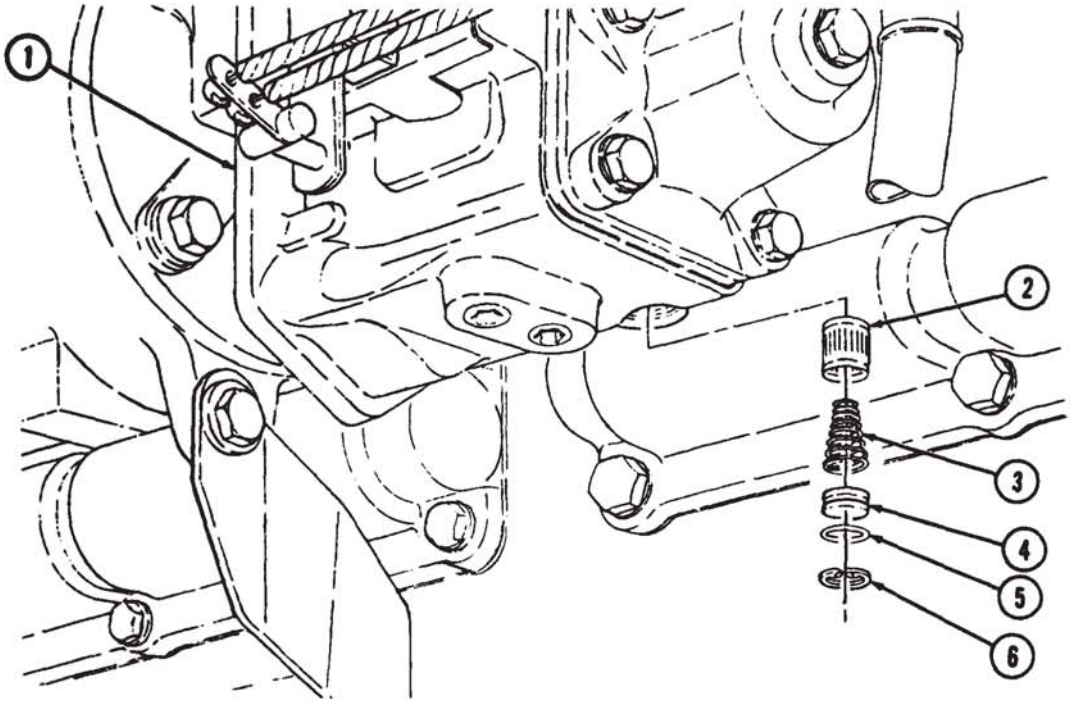

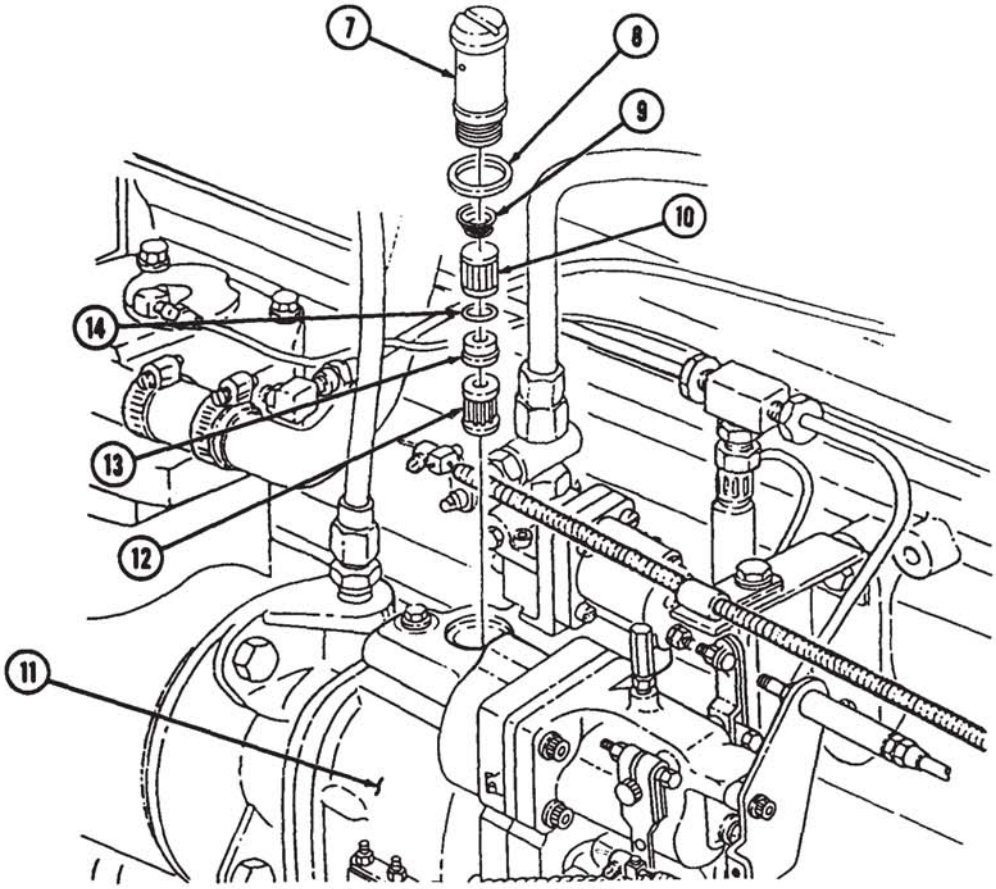

3-28. FUEL PUMP FILTER REPLACEMENT (AFC)

THIS TASK COVERS:

a. Removal **b. Installation**

INITIAL SETUP

APPLICABLE MODELS
All (except M816, M819)

MATERIALS/PARTS
Seal
Filter element

REFERENCES (TM)
TM 9-2320-260-10
TM 9-2320-260-20P

EQUIPMENT CONDITION
- Parking brake set (TM 9-2320-260-10)
- Hood raised and secured (TM 9-2320-260-10).

GENERAL SAFETY INSTRUCTIONS
Diesel fuel is flammable. Do not perform this task near fire, flame, or sparks.

WARNING

Diesel fuel is flammable. Do not perform this task near fire, flame, or sparks. Injury to personnel may result.

a. Removal

1. Remove cap (1) from fuel pump (5).
2. Remove seal (2) from cap (1). Discard seal (2).
3. Remove spring (3) and filter element (4) from fuel pump (5). Discard filter element (4).

b. Installation

1. Install new filter element (4) and spring (3) in fuel pump (5).
2. Install new seal (2) on cap (1).
3. Install cap (1) on fuel pump (5).

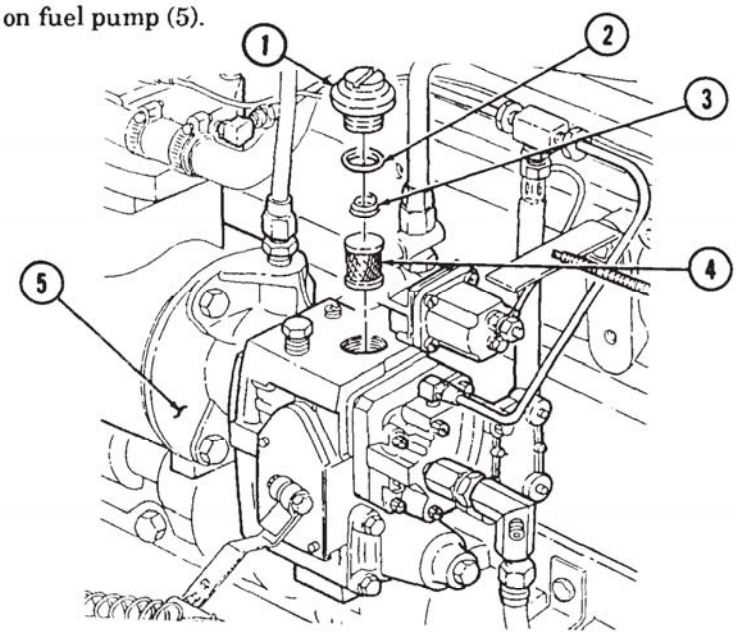

3-29. PRIMER PRESSURE GAGE REPLACEMENT

THIS TASK COVERS:

a. Removal

b. Installation

INITIAL SETUP

APPLICABLE MODELS
All

MATERIALS/PARTS
Eight lockwashers
Two locknuts
Antiseize tape (Appendix C, Item 30)

REFERENCES (TM)
TM 9-2320-260-10
TM 9-2320-260-20P

EQUIPMENT CONDITION
- Parking brake set (TM 9-2320-260-10).
- Hood raised and secured (TM 9-2320-260-10).
- Air reservoirs drained (TM 9-2320-260-10).
- Battery ground cable disconnected (para. 4-48).

GENERAL SAFETY INSTRUCTIONS
Do not disconnect air lines before draining air reservoirs.

a. Removal

NOTE

Assistant will help with step 1.

1. Remove screw (8), lockwasher (7), nut (1), lockwasher (2), screw (5), and bracket (3) from steering column (6) and firewall (4). Discard lockwashers (2) and (7).
2. Loosen screw (9) and remove connector (10) and emergency stop cable (16) from manual shutoff valve (11).
3. Remove locknut (17), screw, (13) washer (14), clamp (12), and emergency stop cable (16) from bracket (15). Discard locknut (17).
4. Loosen screw (26) and remove connector (25) and throttle cable (20) from accelerator linkage (24).
5. Remove locknut (21), screw (18), washer (19), clamp (23), and throttle cable (20) from bracket (22). Discard locknut (21).

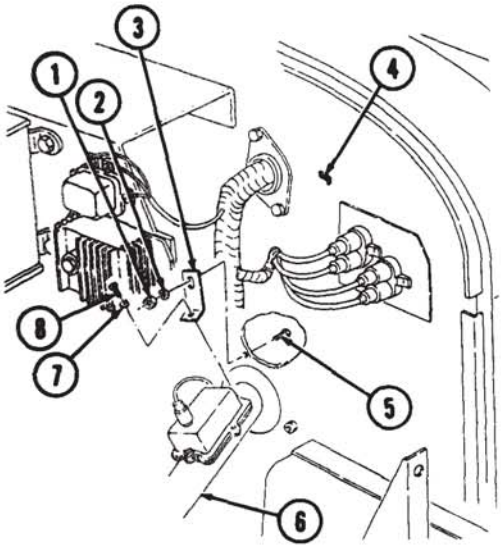

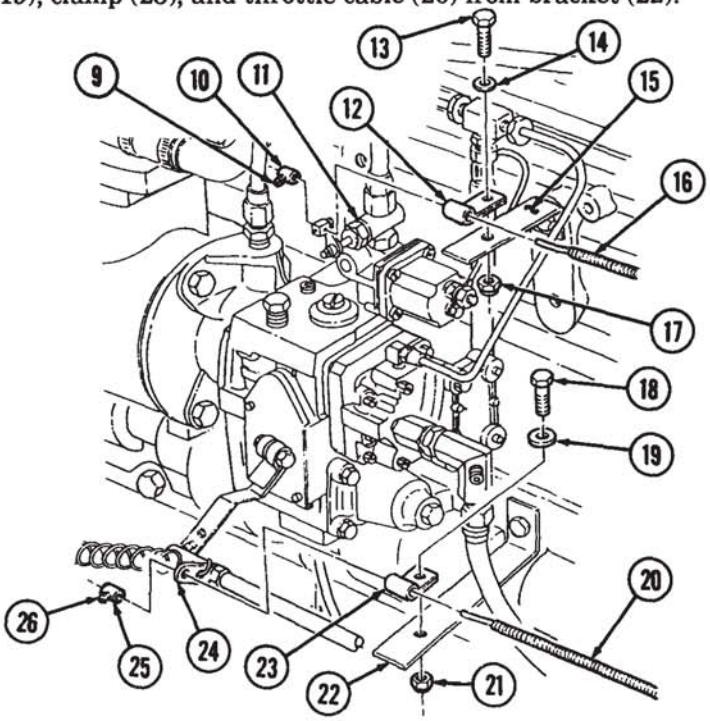

3-29. PRIMER PRESSURE GAGE REPLACEMENT (Contd)

6. Remove screw (7) and open clamp (8) of steering column support (6) from steering column (9).
7. Remove three nuts (10), screws (5), six lockwashers (4), steering column support (6), and steering column (9) from instrument panel (3). Discard lockwashers (4).

WARNING

Do not disconnect air lines before draining air reservoirs. Small parts under pressure may shoot out with high velocity, causing injury to personnel.

8. Disconnect tube (12) from wiper control valve (11).
9. Remove clamp (2) and wiper supply hose (1) from tube (12).
10. Loosen four fasteners (13) and remove instrument cluster (14) from instrument panel (3).

NOTE

- Removal of the speedometer and tachometer driveshaft cables are the same for vehicles equipped with a tachograph.
- Tag driveshaft cables for installation.

11. Disconnect speedometer driveshaft cable (18) and tachometer driveshaft cable (16) from speedometer (17) and tachometer (15).
12. Disconnect oil pressure piping (20) from oil pressure gage elbow (19).
13. Open glove compartment door (27).
14. Remove ten screws (29) and glove compartment (28) from instrument panel (3).
15. Disconnect air tube (22) from air cleaner indicator (21).
16. Remove two nuts (26), washers (25), and screws (23) from instrument panel (3) and bracket (24).
17. Remove four screws (32), two screw-assembled washers (34), six screws (31), and instrument panel (3) from cab cowling (30).
18. Pull top of instrument panel (3) away from cab cowling (30) to access primer pressure gage (33).
19. Disconnect fuel line (35) from elbow (36).
20. Remove two nuts (37), washers (38), bracket (39), and primer pressure gage (33) from instrument panel (3).
21. Remove elbow (36) from primer pressure gage (33).

b. Installation

1. Apply antiseize tape to male threads of elbow (36).
2. Install elbow (36) on primer pressure gage (33).
3. Install primer pressure gage (33) on instrument panel (3) with bracket (39), two washers (38), and nuts (37).
4. Connect fuel line (35) on elbow (36).
5. Position instrument panel (3) on cab cowling (30) and install with six screws (31), two screw-assembled washers (34), and four screws (32).
6. Install two screws (23), washers (25), and nuts (26) on instrument panel (3) and bracket (24).
7. Connect air tube (22) to air cleaner indicator (21).
8. Install glove compartment (28) on instrument panel (3) with ten screws (29).
9. Close glove compartment door (27).

3-29. PRIMER PRESSURE GAGE REPLACEMENT (Contd)

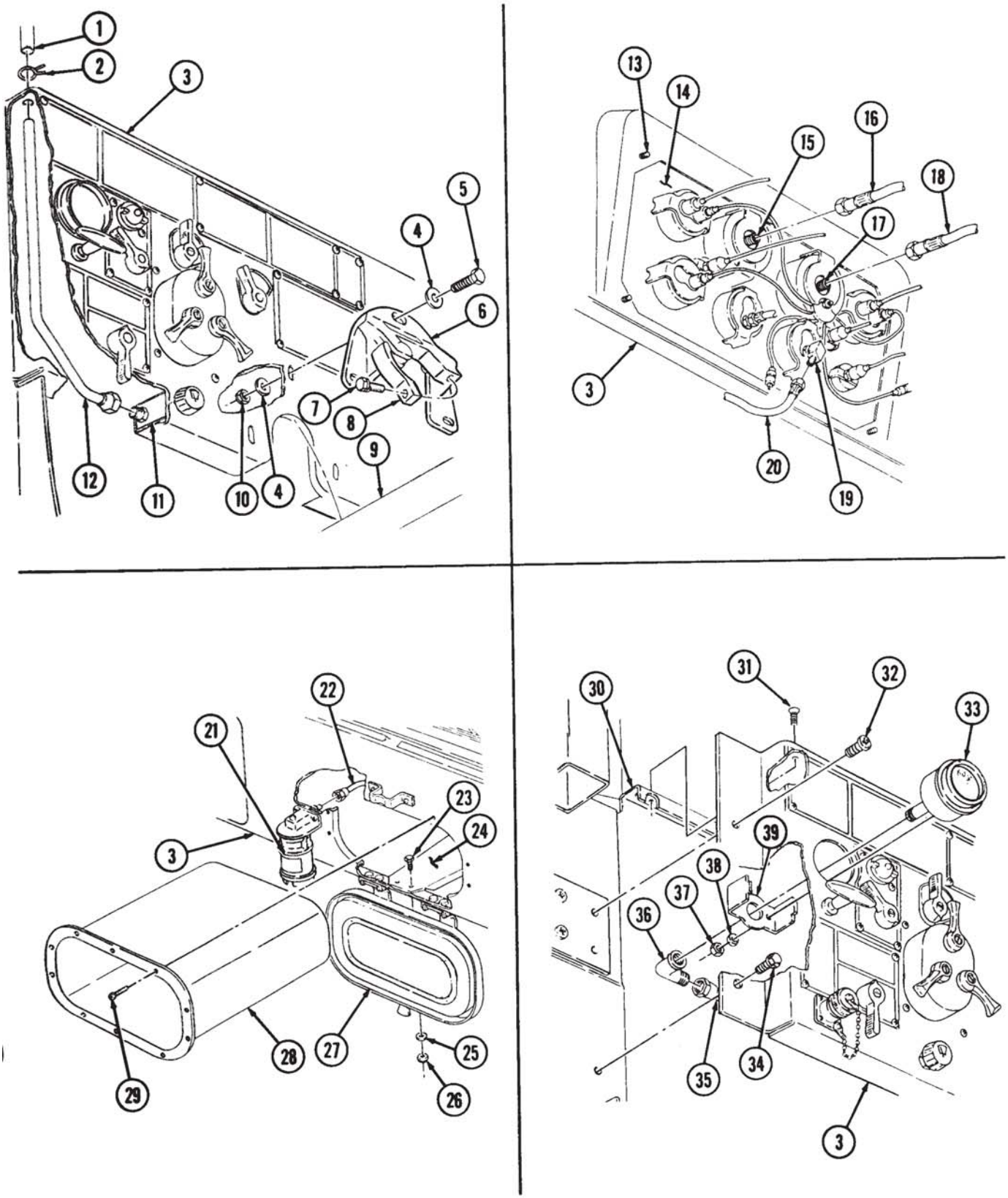

3-29. PRIMER PRESSURE GAGE REPLACEMENT (Contd)

10. Connect oil pressure piping (8) on oil pressure gage elbow (7).
11. Connect speedometer driveshaft cable (6) and tachometer driveshaft cable (4) on speedometer (5) and tachometer (3).
12. Install instrument cluster (2) on instrument panel (9). Tighten four fasteners (1).
13. Install wiper supply hose (10) on tube (20) with clamp (11).
14. Connect tube (20) on wiper control valve (19).
15. Install steering column support (14) on instrument panel (9) with six new lockwashers (12), three screws (13), and nuts (18).
16. Place steering column (17) in steering column support (14), close clamp (15) of steering column support (14) on steering column (17) and install with screw (16).

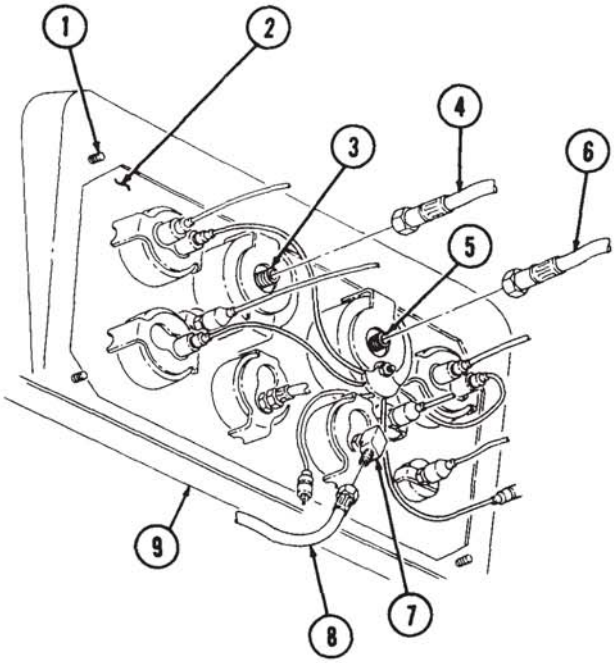

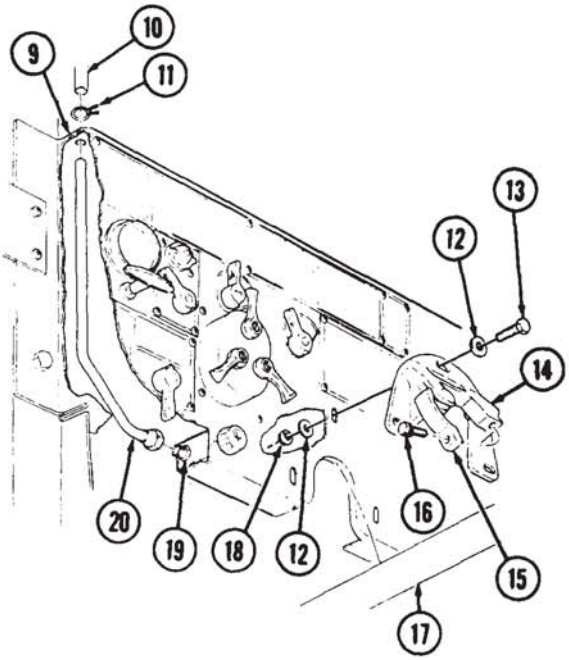

3-29. PRIMER PRESSURE GAGE REPLACEMENT (Contd)

17. Insert throttle cable (32) through accelerator linkage (36).
18. Install connector (37) on throttle cable (32), pull end of throttle cable (32) tight, and tighten screw (38).
19. Install throttle cable (32) on bracket (34) with clamp (35), washer (31), screw (31), and new locknut (33).
20. Insert emergency stop cable (28) through manual shutoff valve (23).
21. Install connector (22) on emergency stop cable (28), pull end of emergency stop cable (28) tight, and tighten screw (21).
22. Install emergency stop cable (28) on bracket (27) with clamp (24), washer (26), screw (25), and new locknut (29).

NOTE

Assistant will help with step 23.

23. Install bracket (41) on steering column (17) and firewall (42) with screw (43), new lockwasher (40), nut (39), new lockwasher (44), and screw (45).

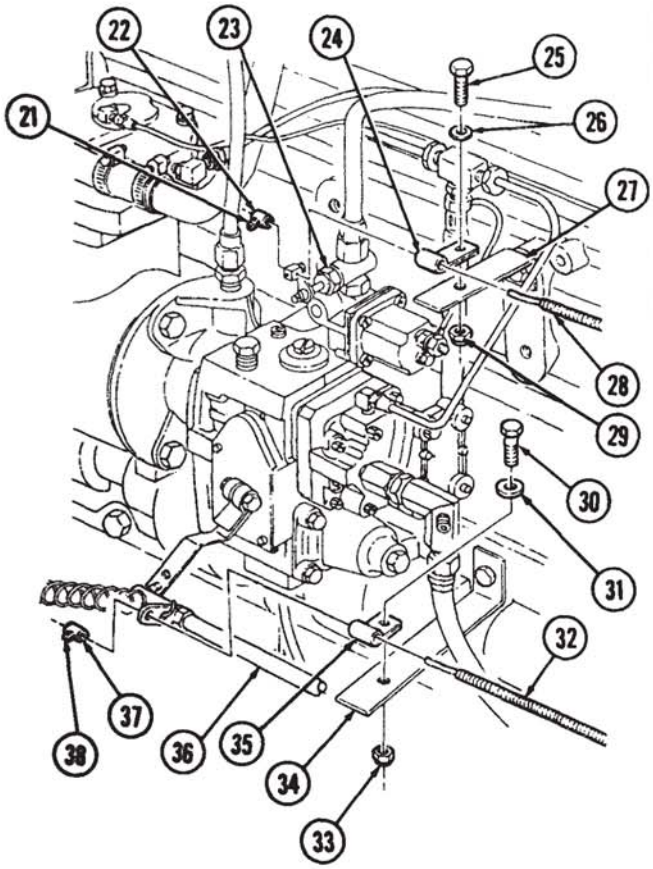

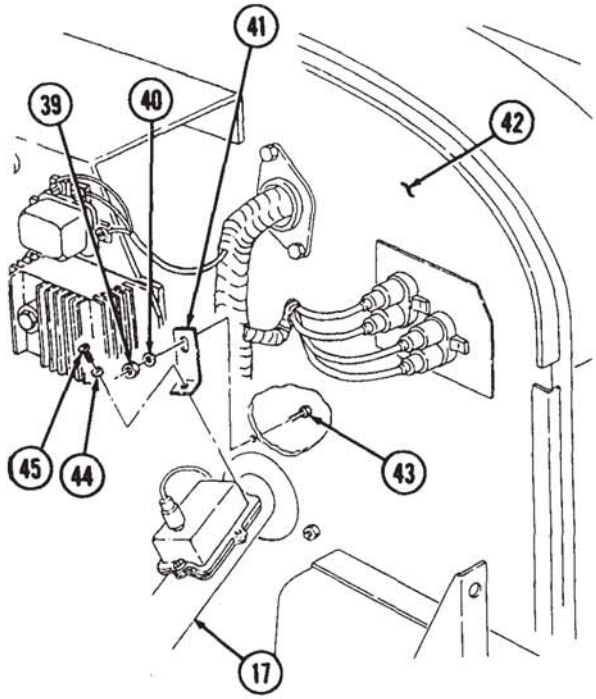

FOLLOW-ON TASKS: • Connect battery ground cable (para. 4-48).
• Start engine (TM 9-2320-260-10) and check for leaks.

3-30. PREHEATER NOZZLE AND GLOW PLUG REPLACEMENT

THIS TASK COVERS:

a. Removal

b. Installation

INITIAL SETUP

APPLICABLE MODELS
All

MATERIALS/PARTS
Locknut
Lockplate
Two gaskets
Antiseize tape (Appendix C, Item 30)

REFERENCES (TM)
TM 9-2320-260-10
TM 9-2320-260-20P

EQUIPMENT CONDITION
- Parking brake set (TM 9-2320-260-10).
- Hood raised and secured (TM 9-2320-260-10).

a. Removal

1. Disconnect hose (5) from elbow (6).
2. Remove elbow (6) from valve (7).
3. Remove adapter (9) and gasket (14) from air intake manifold (15). Discard gasket (14).
4. Bend tabs on lockplate (10) away from nozzle (12).
5. Remove nozzle (12), pin (13), spacer (11), and lockplate (10) from adapter (9). Discard lockplate (10).
6. Remove valve (7) and nipple (8) from adapter (9).
7. Remove locknut (1) and wire (2) from glow plug (3). Discard locknut (1).
8. Remove glow plug (3) and gasket (4) from air intake manifold (15). Discard gasket (4).

b. Installation

1. Apply antiseize tape to male threads of glow plug (3), elbow (6), nipple (8), and adapter (9).
2. Install new gasket (4) and glow plug (3) on air intake manifold (15).
3. Install wire (2) and new locknut (1) on glow plug (3).
4. Install nipple (8) and valve (7) on adapter (9).
5. Install new lockplate (10), spacer (11), pin (13), and nozzle (12) on adapter (9).
6. Bend tabs on lockplate (10) on flats of nozzle (12).
7. Install new gasket (14) and adapter (9) on air intake manifold (15).
8. Install elbow (6) on valve (7).
9. Connect hose (5) to elbow (6).

3-30. PREHEATER NOZZLE AND GLOW PLUG REPLACEMENT (Contd)

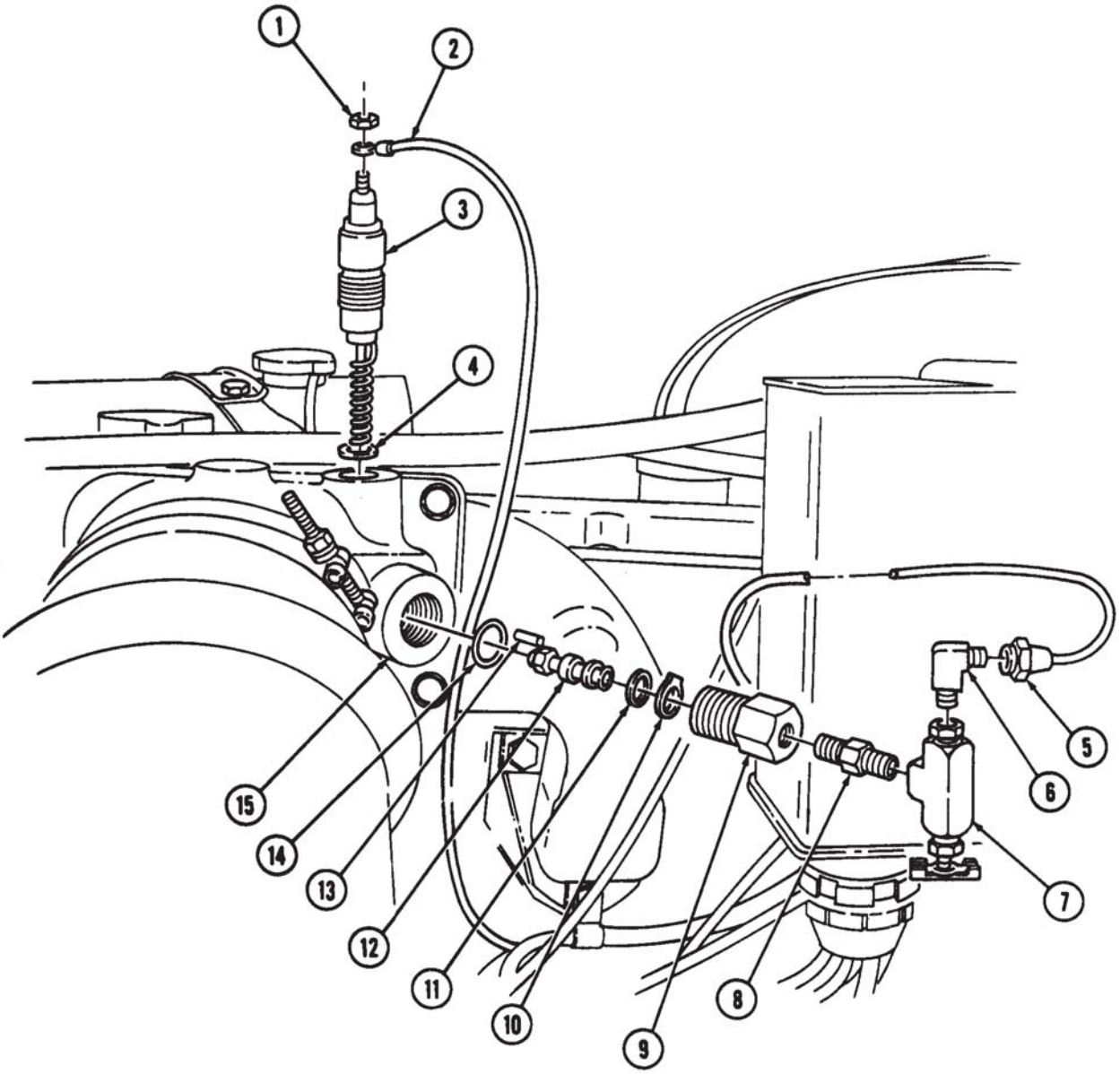

3-31. PREHEATER PRIMER PUMP REPLACEMENT

THIS TASK COVERS:

a. Removal

b. Installation

INITIAL SETUP

APPLICABLE MODELS
All

MATERIALS/PARTS
Antiseize tape (Appendix C, Item 30)

REFERENCES (TM)
TM 9-2320-260-10
TM 9-2320-260-20P

EQUIPMENT CONDITION
Parking brake set (TM 9-2320-260-10).

a. Removal

1. Remove hoses (1) and (3) from tee (2).
2. Remove hose (4) from elbow (5).
3. Loosen jamnut (12) and remove retaining nut (14) and plunger (13) from pump body (6).
4. Remove jamnut (12), nut (11), washer (10), and pump body (6) from instrument panel (8).
5. Remove tee (2), elbow (5), and nut (7) from pump body (6).

b. Installation

1. Apply antiseize tape to male pipe threads of elbow (5) and tee (2).
2. Install tee (2), elbow (5), and nut (7) on pump body (6).
3. Insert pump body (6) through hole (9) in instrument panel (8) and install with washer (10) and nut (11).
4. Install jamnut (12), plunger (13), and retaining nut (14) on pump body (6).
5. Tighten jamnut (12) against retaining nut (14).
6. Connect hose (4) to elbow (5).
7. Connect hoses (1) and (3) to tee (2).

3-31. PREHEATER PRIMER PUMP REPLACEMENT (Contd)

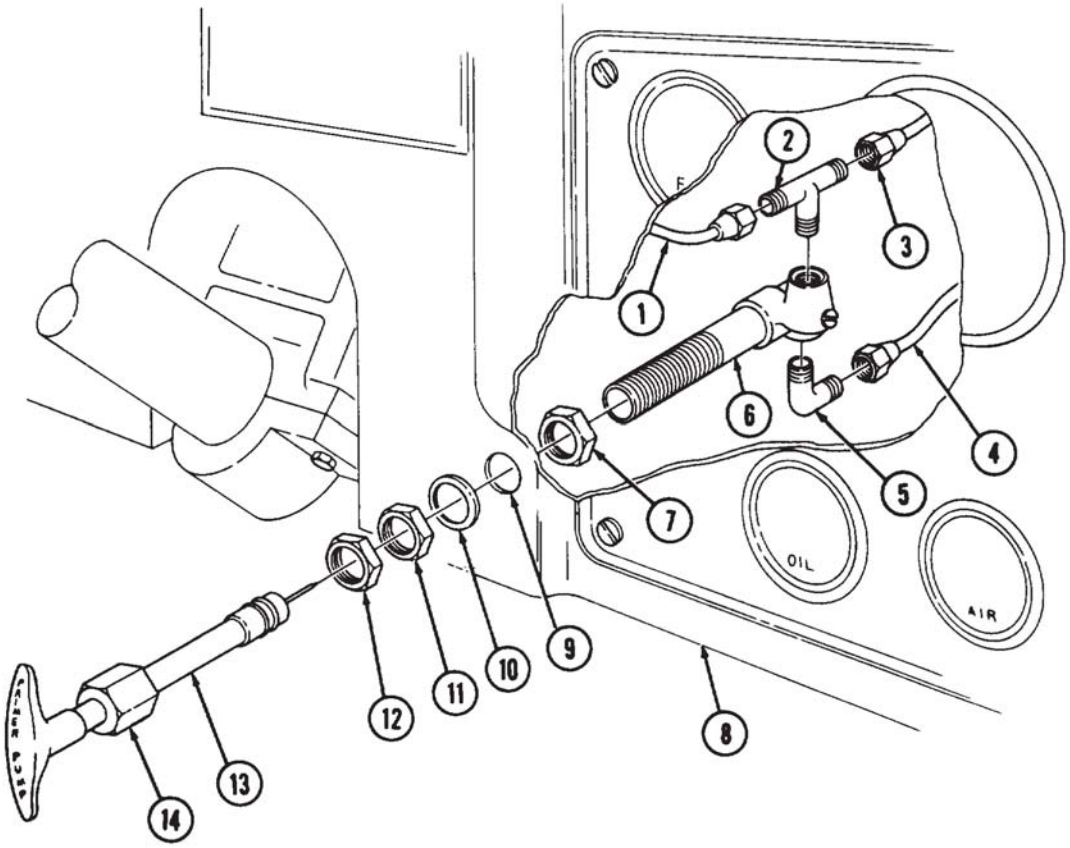

3-32. COLD START INDICATOR AND LAMP REPLACEMENT

THIS TASK COVERS:

a. Removal

b. Installation

INITIAL SETUP

APPLICABLE MODELS

All

MATERIALS/PARTS

Two lockwashers

REFERENCES (TM)

TM 9-2320-260-10
TM 9-2320-260-20P

EQUIPMENT CONDITION

- Parking brake set (TM 9-2320-260-10).
- Battery ground cable disconnected (para. 4-48).

a. Removal

1. Remove lens (10) and gasket (9) from lamp holder (12).
2. Remove lamp (8) from lamp holder (12).
3. Remove two screws (6), lockwashers (5), and push lamp holder (12) behind instrument panel (11). Discard lockwashers (5).
4. Disconnect wire (1) and remove lamp holder (12).
5. Remove nut (2), washer (3), and bracket (4) from lamp holder (12).

b. Installation

1. Install bracket (4), washer (3), and nut (2) on lamp holder (12).
2. Connect wire (1) to lamp holder (12) and install lamp holder (12) through hole (7) in instrument panel (11).
3. Install lamp holder (12) to instrument panel (11) with two new lockwashers (5) and screws (6).
4. Install lamp (8) in lamp holder (12).
5. Install gasket (9) and lens (10) on lamp holder (12).

3-32. COLD START INDICATOR AND LAMP REPLACEMENT (Contd)

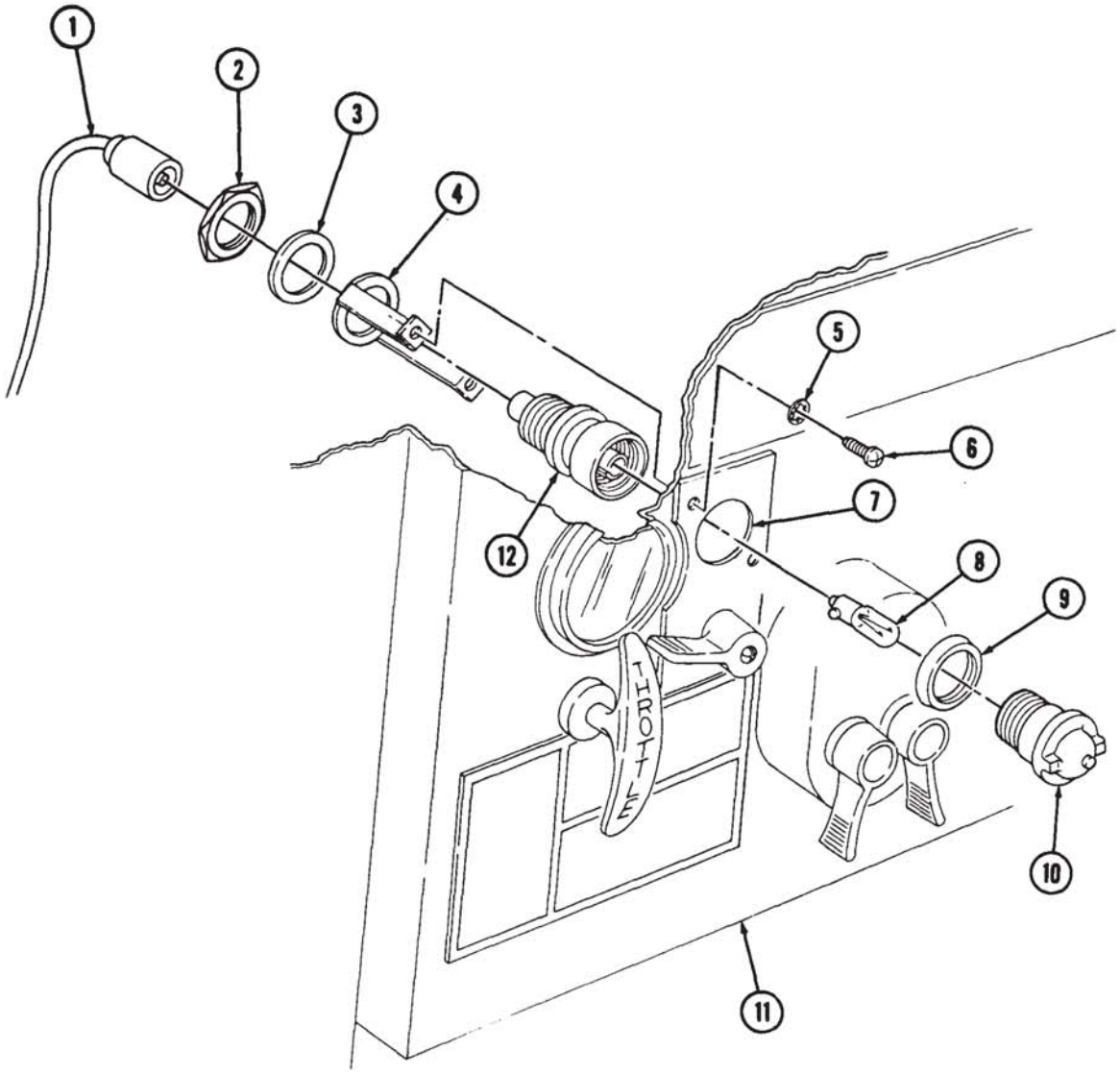

FOLLOW-ON TASK: Connect battery ground cable (para. 4-48).

3-33. COLD START RESISTOR REPLACEMENT

THIS TASK COVERS:

a. Removal

b. Installation

INITIAL SETUP

APPLICABLE MODELS
All

MATERIALS/PARTS
Two lockwashers

REFERENCES (TM)
TM 9-2320-260-10
TM 9-2320-260-20P

EQUIPMENT CONDITION
- Parking brake set (TM 9-2320-260-10).
- Hood raised and secured (TM 9-2320-260-10).
- Battery ground cable disconnected (para. 4-48).

a. Removal

NOTE

Tag all electrical leads for installation.

1. Remove two screws (6), lockwashers (5), and resistor (4) from firewall (7). Discard lockwashers (5).
2. Remove six nuts (2), five leads (1), and two crossover leads (3) from resistor (4).

b. Installation

1. Install two crossover leads (3) and five leads (1) on resistor (4) with six nuts (2).
2. Install resistor (4) on firewall (7) with two new lockwashers (5) and screws (6).

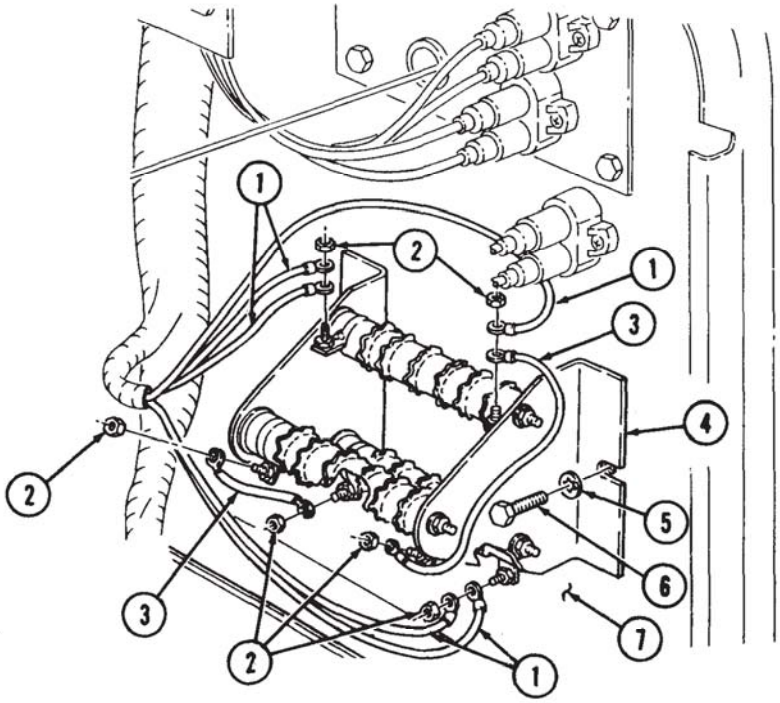

FOLLOW-ON TASK: Connect battery ground cable (para. 4-48).

3-34. COLD START RELAY REPLACEMENT

THIS TASK COVERS:

a. Removal

b. Installation

INITIAL SETUP

APPLICABLE MODELS
All

MATERIALS/PARTS
Two lockwashers

REFERENCES (TM)
TM 9-2320-260-10
TM 9-2320-260-20P

EQUIPMENT CONDITION
- Parking brake set (TM 9-2320-260-10).
- Hood raised and secured (TM 9-2320-260-10).
- Battery ground cable disconnected (para. 4-48).

a. Removal

NOTE

Tag all electrical leads for installation.

1. Remove three screws (1), retaining washers (2), and three wires (3) from relay (6).
2. Remove screw (7), retaining washer (8), and ground wire (9) from relay (6).
3. Remove two screws (5), lockwashers (4), ground wire (9), and relay (6) from mounting bracket (10). Discard lockwashers (4).

b. Installation

1. Position relay (6) and ground wire (9) on mounting bracket (10) and install with two new lockwashers (4) and screws (5).
2. Install three wires (3) on relay (6) with three retaining washers (2) and screws (1).
3. Install ground wire (9) on relay (6) with retaining washer (8) and screw (7).

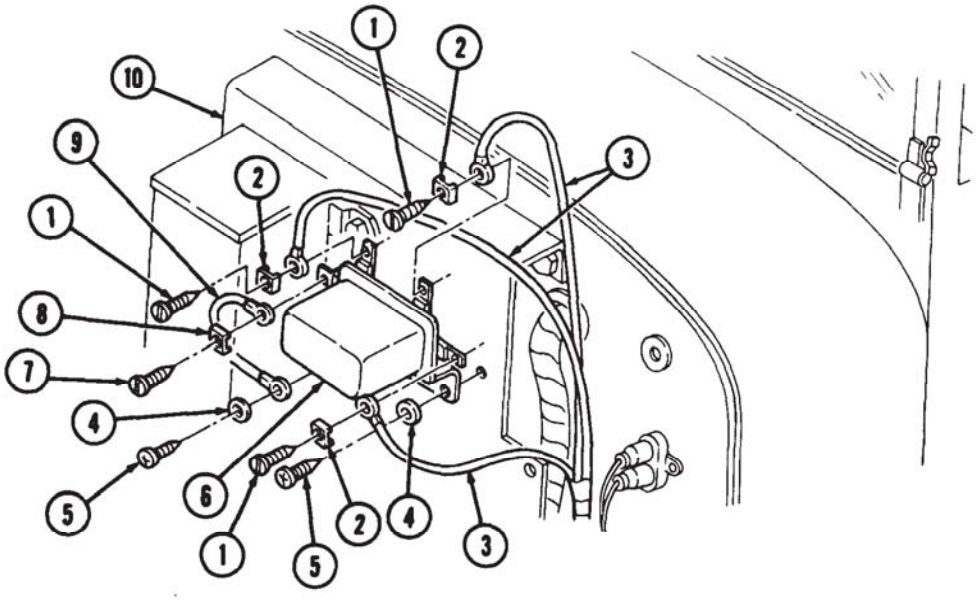

FOLLOW-ON TASK: Connect battery ground cable (para. 4-48).

Section V. ACCELERATOR SYSTEM MAINTENANCE

3-35. ACCELERATOR SYSTEM MAINTENANCE INDEX

PARA. NO.	TITLE	PAGE NO.
3-36.	Accelerator Pedal, Bracket, Rod, and Stopscrew Replacement	3-68
3-37.	Accelerator Control Linkage Maintenance	3-70
3-38.	Emergency Stop and Throttle Control Cable Maintenance	3-72

3-36. ACCELERATOR PEDAL, BRACKET, ROD, AND STOPSCREW REPLACEMENT

THIS TASK COVERS:

a. Removal

b. Installation

INITIAL SETUP

APPLICABLE MODELS
All

MATERIALS/PARTS
Two cotter pins
Three locknuts

REFERENCES (TM)
TM 9-2320-260-10
TM 9-2320-260-20P

EQUIPMENT CONDITION
- Parking brake set (TM 9-2320-260-10).
- Hood raised and secured (TM 9-2320-260-10).
- Intermediate tunnel removed (para. 11-30).

a. Removal

1. Remove two cotter pins (2), washers (3), and rod (12) from accelerator pedal (1) and lever (11). Discard cotter pins (2).
2. Remove two locknuts (6), screws (4), accelerator pedal (1), and bracket (5) from cab floor (13). Discard locknuts (6).
3. Remove locknut (10), two washers (9), and stopscrew (7) from cab floor (13). Discard locknut (10).

NOTE

Mark or record position of nut on stopscrew for installation to ensure proper accelerator linkage operation.

4. Remove nut (8) from stopscrew (7).

b. Installation

1. Install nut (8) on stopscrew (7).
2. Install stopscrew (7) on cab floor (13) with two washers (9) and new locknut (10).
3. Install bracket (5) and accelerator pedal (1) on cab floor (13) with two screws (4) and new locknuts (6).
4. Insert rod (12) through hole in cab floor (13) and install on lever (11) and accelerator pedal (1) with two washers (3) and new cotter pins (2).

3-36. ACCELERATOR PEDAL, BRACKET, ROD, AND STOPSCREW REPLACEMENT (Contd)

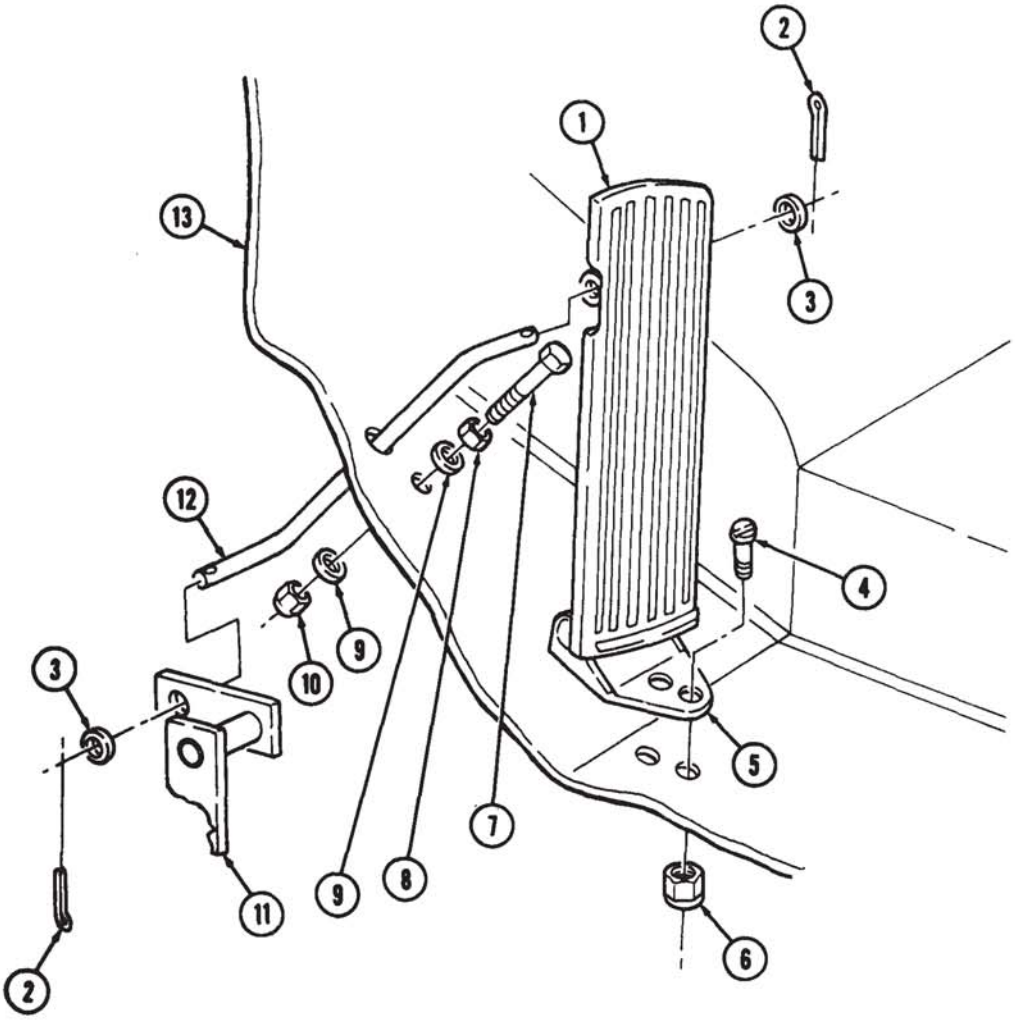

FOLLOW-ON TASK: Install intermediate tunnel (para. 11-30).

3-37. ACCELERATOR CONTROL LINKAGE MAINTENANCE

THIS TASK COVERS:

a. Removal
b. Installation
c. Adjustment

INITIAL SETUP

APPLICABLE MODELS
All

MATERIALS/PARTS
Four locknuts
Three cotter pins

REFERENCES (TM)
TM 9-2320-260-10
TM 9-2320-260-20P

EQUIPMENT CONDITION
- Parking brake set (TM 9-2320-260-10).
- Hood raised and secured (TM 9-2320-260-10).

a. Removal

1. Remove throttle spring (12) from injector pump lever (14) and bracket (13).
2. Remove locknut (15) and rod (9) from injector pump lever (14). Discard locknut (15).
3. Remove locknut (8), screw (7), and rod (9) from lever (6). Discard locknut (8).
4. Remove cotter pin (16), washer (17), and rod (19) from lever (6). Discard cotter pin (16).
5. Remove two cotter pins (3), shaft (4), and lever (6) from bracket (5). Discard cotter pins (3).
6. Remove two locknuts (18), screws (20), and bracket (5) from cab floor (2). Discard locknuts (18).

b. Installation

1. Install bracket (5) on cab floor (2) with two screws (20) and new locknuts (18).
2. Position lever (6) in bracket (5) and install with shaft (4) and two new cotter pins (3).
3. Install rod (19) on lever (6) with washer (17) and new cotter pin (16).
4. Install rod (9) on lever (6) with screw (7) and new locknut (8).
5. Install rod (9) on injector pump lever (14) with new locknut (15).
6. Install throttle spring (12) on injector pump lever (14) and bracket (13).

c. Adjustment

1. Remove throttle spring (12) from injector pump lever (14).
2. Remove locknut (15) and rod (9) from injector pump lever (14). Discard locknut (15).

NOTE

Assistant will help with step 3.

3. Press accelerator pedal (1) down to cab floor (2) and hold.
4. Rotate injector pump lever (14) counterclockwise to full throttle position.
5. Place rod (9) on injector pump lever (14). If rod (9) does not aline with hole in injector pump lever (14), loosen jamnut (10) and turn balljoint end (11) as required. Tighten jamnut (10).
6. Install rod (9) on injector pump lever (14) with new locknut (15).
7. Install return spring (12) on injector pump lever (14).

3-37. ACCELERATOR CONTROL LINKAGE MAINTENANCE (Contd)

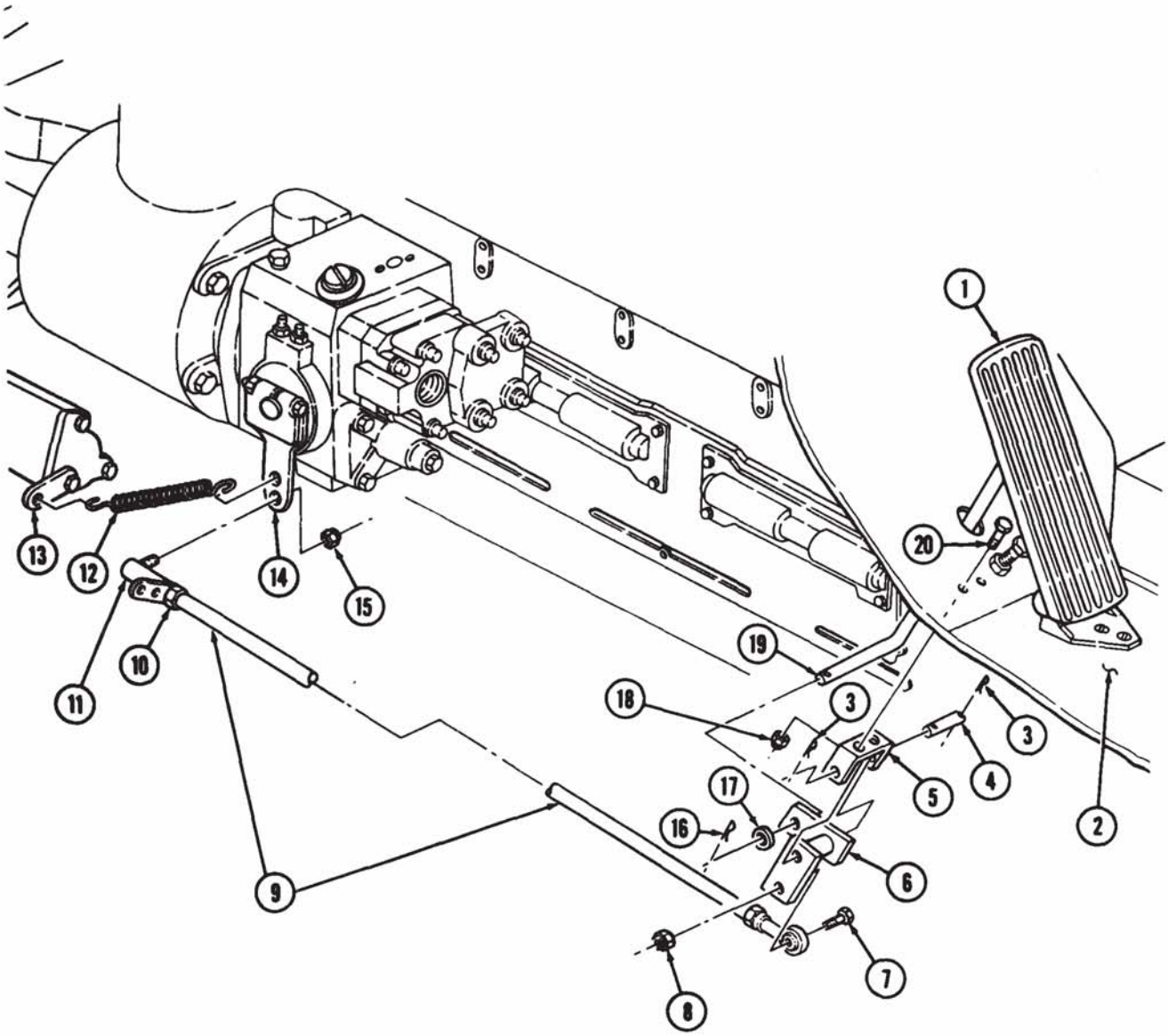

3-38. EMERGENCY STOP AND THROTTLE CONTROL CABLE MAINTENANCE

THIS TASK COVERS:

a. Removal
b. Inspection
c. Installation

INITIAL SETUP

APPLICABLE MODELS
All

MATERIALS/PARTS
Locknut
Lockwasher
GAA grease (Appendix C, Item 16)

REFERENCES (TM)
TM 9-2320-260-10
TM 9-2320-260-20P

EQUIPMENT CONDITION
- Parking brake set (TM 9-2320-260-10).
- Hood raised and secured (TM 9-2320-260-10).

a. Removal

NOTE

- Emergency stop cable end may need to be straightened to remove.
- Emergency stop and throttle control cables are replaced basically the same way. This procedure is for the emergency stop cable.

1. Remove screw (7) and connector (8) from emergency stop cable (4).
2. Remove emergency stop cable (4) from lever (9).
3. Remove locknut (6), screw (1), washer (2), clamp (3), and emergency stop cable (4) from bracket (5). Discard locknut (6).
4. Remove nut (12) and lockwasher (13) from emergency stop control (15).
5. Pull emergency stop control (15) through grommet (11) in firewall (10) and instrument cluster (14). Remove nut (12), lockwasher (13), and spacer (16). Discard lockwasher (13).
6. Remove grommet (11) from firewall (10).

b. Inspection

Inspect emergency stop cable (4) for binding and breaks. Replace if binding or broken.

c. Installation

1. Install grommet (11) in firewall (10).
2. Coat emergency stop cable (4) with thin film of GAA grease and thread emergency stop cable (4) through instrument cluster (14), spacer (16), new lockwasher (13), nut (12), and grommet (11).
3. Install emergency stop control (15) on instrument cluster (14) with new lockwasher (13) and nut (12).
4. Insert emergency stop cable (4) through lever (9) and install connector (8) and screw (7). Bend end of emergency stop cable (4) to 90° angle.
5. Install emergency stop cable (4) on bracket (5) with clamp (3), washer (2), screw (1), and new locknut (6).

3-38. EMERGENCY STOP AND THROTTLE CONTROL CABLE MAINTENANCE (Contd)

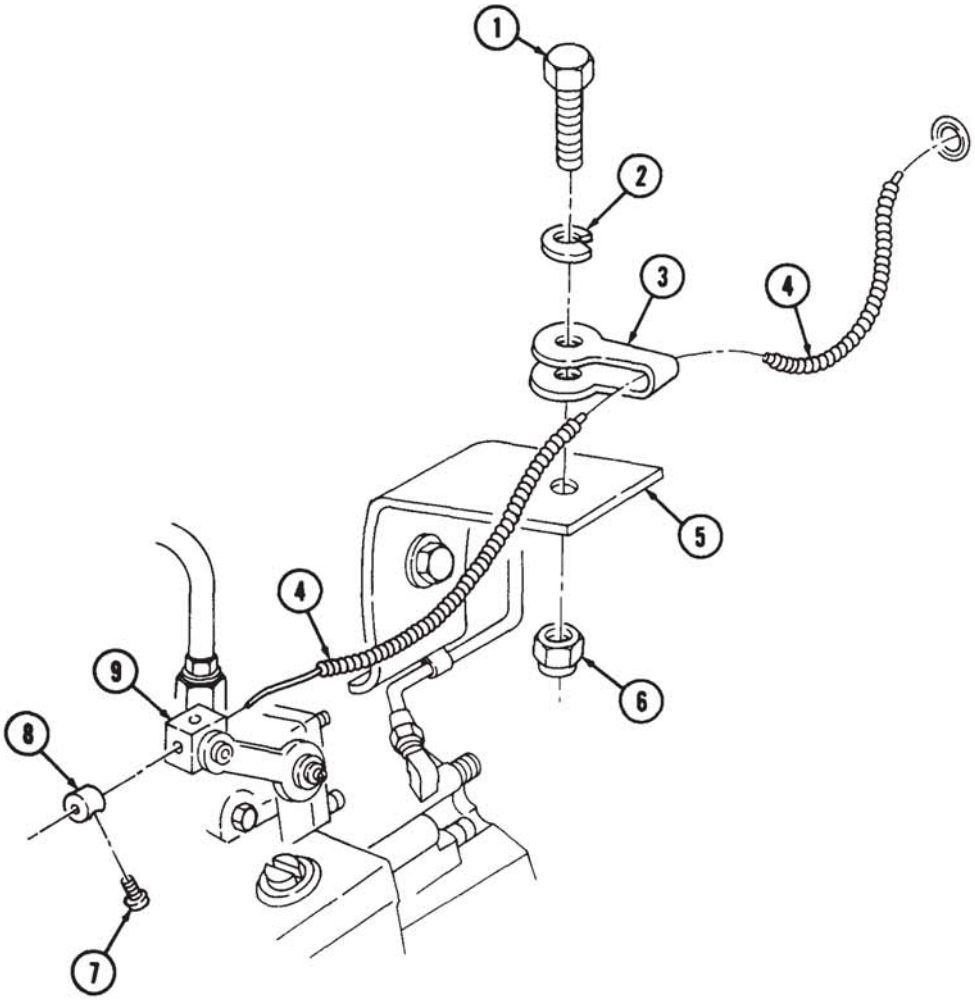

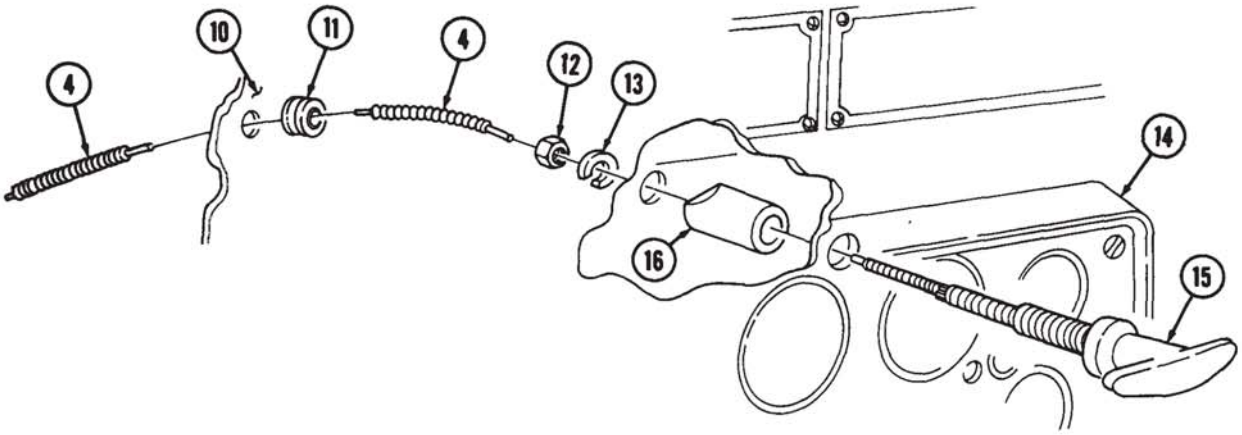

Section VI. EXHAUST SYSTEM MAINTENANCE

3-39. EXHAUST SYSTEM MAINTENANCE INDEX

PARA. NO.	TITLE	PAGE NO.
3-40.	Vertical Exhaust Pipe Replacement	3-74
3-41.	Horizontal Exhaust Pipe Maintenance (M821)	3-76
3-42.	Exhaust Muffler Replacement	3-80
3-43.	Exhaust Muffler Bracket Maintenance	3-82

3-40. VERTICAL EXHAUST PIPE REPLACEMENT

THIS TASK COVERS:

a. Removal

b. Installation

INITIAL SETUP

APPLICABLE MODELS
All

MATERIALS/PARTS
Two locking plates
Gasket
Ten locknuts
Antiseize compound (Appendix C, Item 5)

REFERENCES (TM)
TM 9-2320-260-10
TM 9-2320-260-20P

EQUIPMENT CONDITION
Parking brake set (TM 9-2320-260-10).

GENERAL SAFETY INSTRUCTIONS
Do not perform this task when exhaust system is hot.

WARNING

Do not touch hot exhaust system components with bare hands. Injury to personnel may result.

a. Removal

1. Remove two clamps (13) from exhaust pipe (22).
2. Remove four locknuts (26), screws (24), washers (23), two brackets (12), and exhaust shield (25) from exhaust pipe (22). Discard locknuts (26).
3. Remove two locknuts (4), washers (3), U-clamp (27), and exhaust stack (1) from bracket (2) and exhaust pipe (22). Discard locknuts (4).
4. Bend tabs of two locking plates (21) away from screws (20).
5. Remove four screws (20), two locking plates (21), exhaust pipe (22), and gasket (19) from right front fender (17) and muffler (18). Discard locking plates (21) and gasket (19).
6. Remove locknut (11), screw (6), two washers (7), springs (5), and bracket (2) from bracket (8). Discard locknut (11).
7. Remove locknut (15), screw (9), two locknuts (16), screws (10), and bracket (8) from gun mount bracket (14). Discard locknuts (15) and (16).

3-40. VERTICAL EXHAUST PIPE REPLACEMENT (Contd)

b. Installation

1. Insert exhaust pipe (22) through hole in right front fender (17).
2. Apply antiseize compound to threads of four screws (20).
3. Install new gasket (19) and exhaust pipe (22) on muffler (18) with two new locking plates (21) and four screws (20).
4. Bend tabs of new locking plates (21) over surface of screws (20).
5. Install bracket (8) on gun mount bracket (14) with screw (9), new locknut (15), two screws (10), and new locknuts (16). Tighten locknuts (16) and screws (10) 15-20 lb-ft (20-27 N•m). Tighten upper locknut (15) and screw (9) 63-77 lb-ft (85-104 N•m).
6. Install screw (6), two washers (7), springs (5), bracket (2), and new locknut (11) on bracket (8).
7. Install exhaust stack (1) to exhaust pipe (22) and bracket (2) with U-clamp (27), two washers (3), and new locknuts (4).
8. Install exhaust shield (25) on exhaust pipe (22) with two brackets (12), four washers (23), screws (24), new locknuts (26), and two clamps (13).

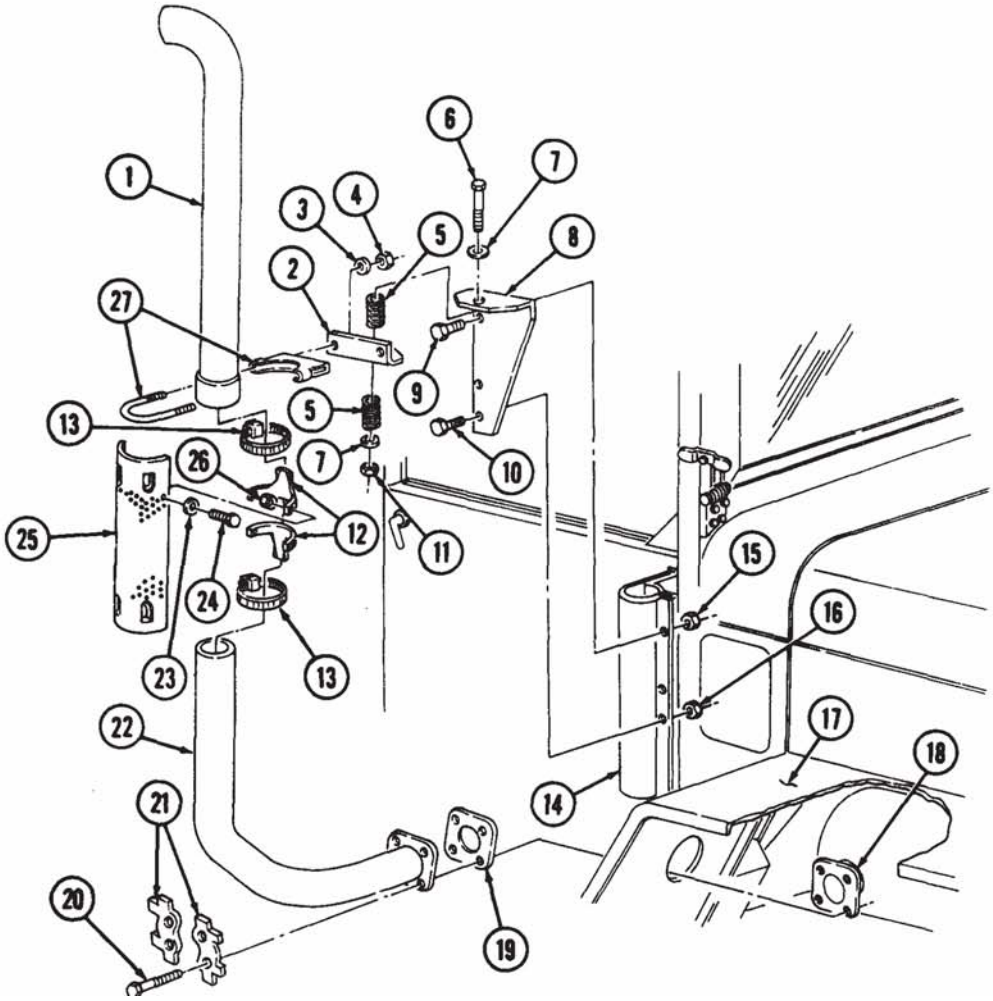

FOLLOW-ON TASK Start engine (TM 9-2320-260-10) and check for exhaust leaks.

3-41. HORIZONTAL EXHAUST PIPE MAINTENANCE (M821)

THIS TASK COVERS:

a. Removal
b. Disassembly
c. Assembly
d. Installation

INITIAL SETUP

APPLICABLE MODELS
M821

MATERIALS/PARTS
Twenty locknuts
Four gaskets
Two locking plates
Antiseize compound (Appendix C, Item 5)

REFERENCES (TM)
TM 9-2320-260-10
TM 9-2320-260-20P

EQUIPMENT CONDITION
Parking brake set (TM 9-2320-260-10).

GENERAL SAFETY INSTRUCTIONS
Do not perform this task when exhaust system is hot.

WARNING

Do not touch hot exhaust system components with bare hands. Injury to personnel may result.

a. Removal

1. Bend tabs of two locking plates (25) away from screws (24).
2. Remove four screws (24), two locking plates (25), exhaust pipe (23), and gasket (26) from muffler (1). Discard gasket (26) and locking plates (25).
3. Remove four locknuts (20), screws (17), washers (16), exhaust pipe (23), and gasket (12) from exhaust pipe (15). Discard gasket (12) and locknuts (20).

NOTE

Assistant will help with step 4.

4. Remove two locknuts (10), washers (9), screws (6), exhaust pipe hangers (5), and exhaust pipe (23) from two brackets (7). Discard locknuts (10).
5. Remove two locknuts (13), screws (19), washers (18), and exhaust pipe (15) from frame (14). Discard locknuts (13).
8. Remove four nuts (4), washers (3), screws (21), two clamps (2) and (22), and exhaust pipe hangers (5) from exhaust pipe (23).
9. Remove four locknuts (8), screws (11), and two brackets (7) from frame (14). Discard locknuts (8).

b. Disassembly

1. Remove four locknuts (28), screws (31), eight washers (29), exhaust pipe (27), and gasket (30) from exhaust pipe (32). Discard locknuts (28) and gasket (30).
2. Remove four locknuts (37), screws (35), eight washers (36), exhaust pipe (34), and gasket (33) from exhaust pipe (32). Discard locknuts (37) and gasket (33).

3-41. HORIZONTAL EXHAUST PIPE MAINTENANCE (M821) (Contd)

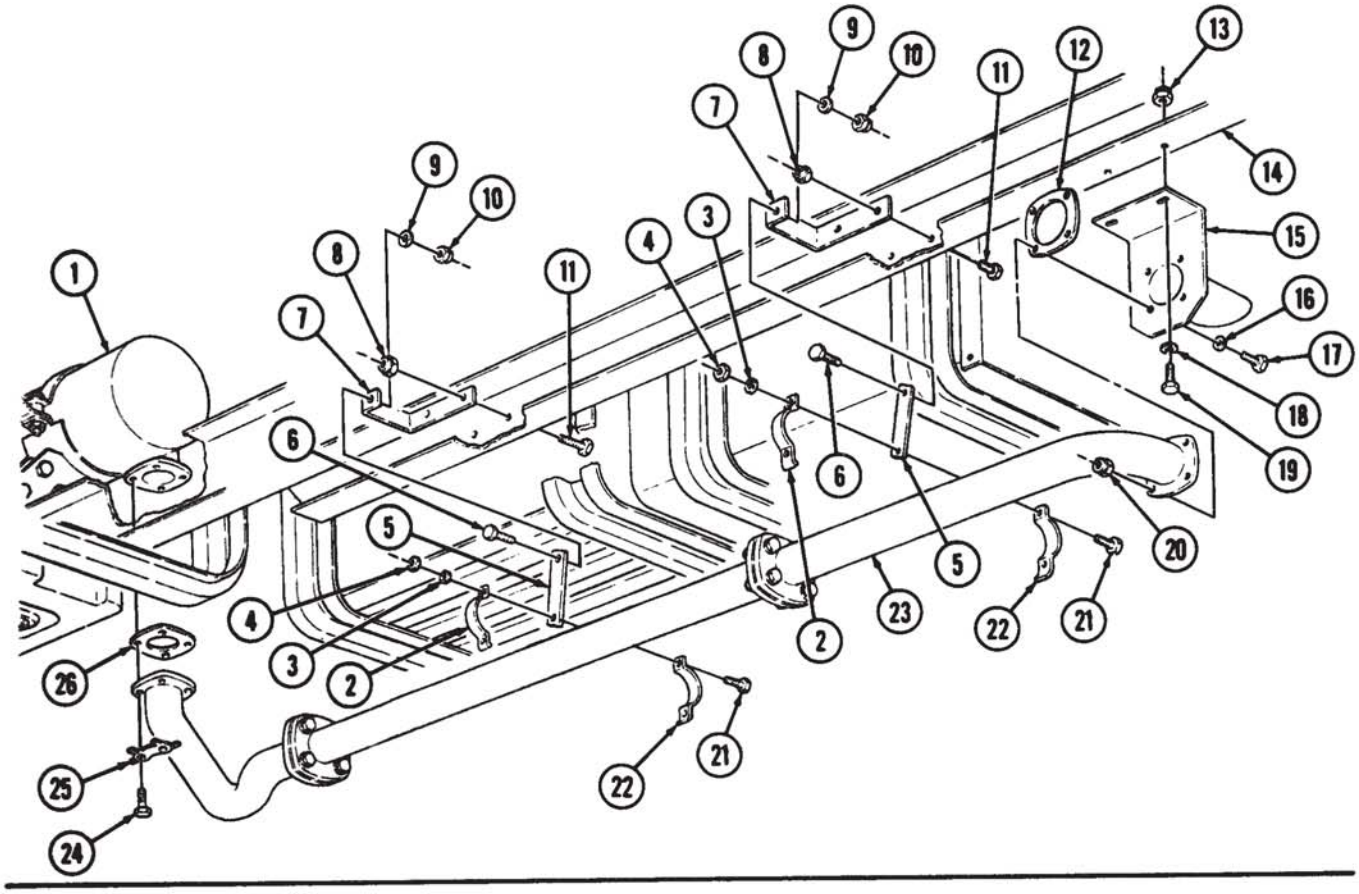

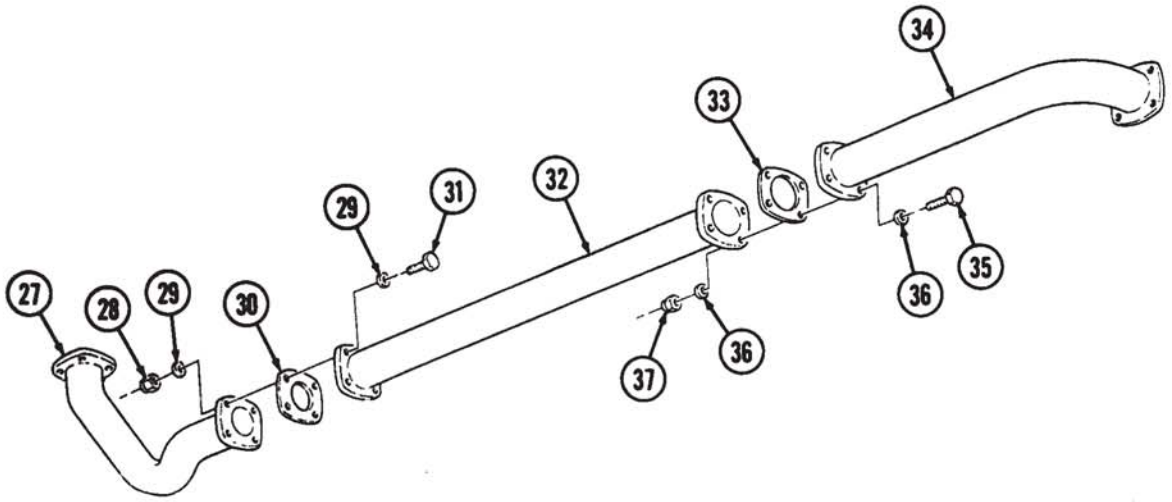

3-41. HORIZONTAL EXHAUST PIPE MAINTENANCE (M821) (Contd)

c. Assembly

1. Apply antiseize compound to threads of screws (5) and (9).
2. Install new gasket (7) and exhaust pipe (8) on exhaust pipe (6) with eight washers (10), four screws (9), and new locknuts (11). Tighten locknuts (11) 75-80 lb-ft (102-108 N•m).
3. Install new gasket (4) and exhaust pipe (1) on exhaust pipe (6) with eight washers (3), four screws (5), and new locknuts (2). Tighten locknuts (2) 75-80 lb-ft (102-108 N•m).

d. Installation

NOTE

Assistant will help with steps 3 through 5.

1. Install exhaust pipe (26) on frame (25) with two washers (29), screws (30), and new locknuts (24).
2. Apply antiseize compound to threads of four screws (35).
3. Install new gasket (37) and exhaust pipe (25) on muffler (12) with two new locking plates (36) and four screws (35). Tighten screws (35) 24-30 lb-ft (33-41 N•m).
4. Bend tabs of new locking plates (36) over surface of screws (35).
5. Install new gasket (23) and exhaust pipe (34) on exhaust pipe (26) with four washers (27), screws (28), and new locknuts (31).
6. Install two clamps (13) and (33) and exhaust pipe hangers (16) on exhaust pipes (34) with four screws (32), washers (14), and nuts (15). Finger tighten nuts (15).
7. Install two brackets (18) on frame (25) with four screws (22) and new locknuts (19).
8. Install two exhaust pipe hangers (16) on brackets (18) with two screws (17), washers (20), and new locknuts (21).
9. Tighten nuts (15).

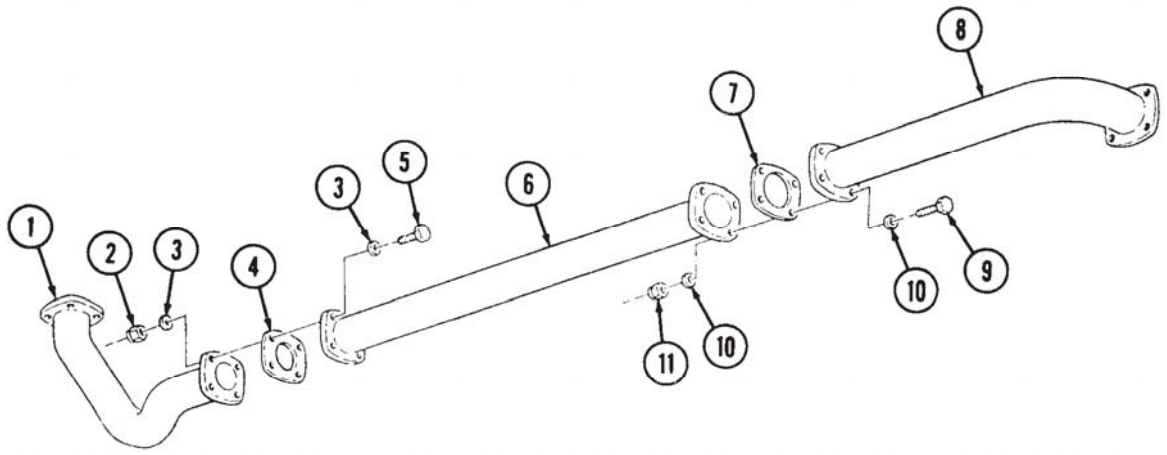

3-41. HORIZONTAL EXHAUST PIPE MAINTENANCE (M821) (Contd)

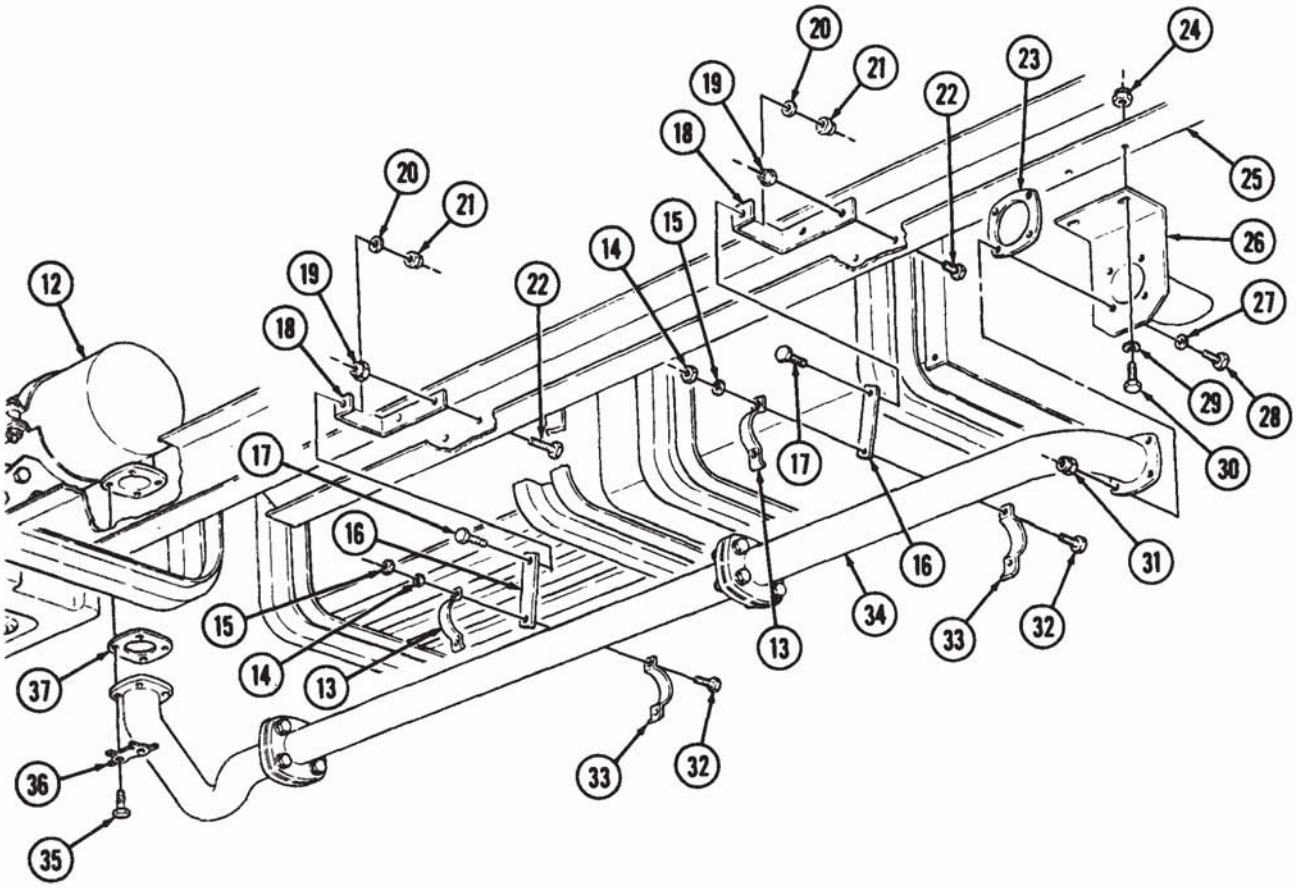

FOLLOW-ON TASK: Start engine (TM 9-2320-260-10) and check for exhaust leaks.

3-42. EXHAUST MUFFLER REPLACEMENT

THIS TASK COVERS:

a. Removal

b. Installation

INITIAL SETUP

APPLICABLE MODELS
All

MATERIALS/PARTS
Six locknuts
Gasket
Antiseize compound (Appendix C, Item 5)

PERSONNEL REQUIRED
Two

REFERENCES (TM)
TM 9-2320-260-10
TM 9-2320-260-20P

EQUIPMENT CONDITION
- Parking brake set (TM 9-2320-260-10).
- Hood raised and secured (TM 9-2320-260-10).
- Horizontal exhaust pipe removed (if so equipped) (para. 3-41).
- Vertical exhaust pipe removed (if so equipped) (para. 3-40).
- Oil dipstick and tube removed (para. 3-3).
- Personnel hot water heater removed (para. 14-10).

GENERAL SAFETY INSTRUCTIONS
Do not perform this task when exhaust system is hot.

WARNING

Do not touch hot exhaust system components with bare hands. Injury to personnel may result.

NOTE

Exhaust muffler replacement procedure is the same for vertical and horizontal exhaust systems.

a. Removal

1. Remove two locknuts (7), screws (1), spacer (10), and retaining strap (2) from muffler (11) and bracket (9). Discard locknuts (7).
2. Remove four locknuts (4), screws (5), muffler (11), and gasket (3) from exhaust manifold (6) and bracket (9). Discard locknuts (4) and gasket (3).

b. Installation

1. Position muffler (11) on bracket (9).
2. Apply antiseize compound on threads of four screws (5) and new locknuts (4).
3. Install new gasket (3) and muffler (11) on exhaust manifold (6) with four screws (5) and locknuts (4). Finger tighten locknuts (4).
4. Rotate muffler (11) counterclockwise toward rear of engine (8) as far as possible.
5. Tighten locknuts (4) 70-85 lb-ft (95-115 N•m).
6. Apply antiseize compound to threads of two screws (1) and new locknuts (7).
7. Install spacer (10) and retaining strap (2) on muffler (11) and bracket (9) with two screws (1) and locknuts (7). Finger tighten locknuts (7).
8. Tighten inner locknut (7) 85-95 lb-ft (115-129 N•m).
9. Tighten outer locknut (7) 85-95 lb-ft (115-129 N•m).

3-42. EXHAUST MUFFLER REPLACEMENT (Contd)

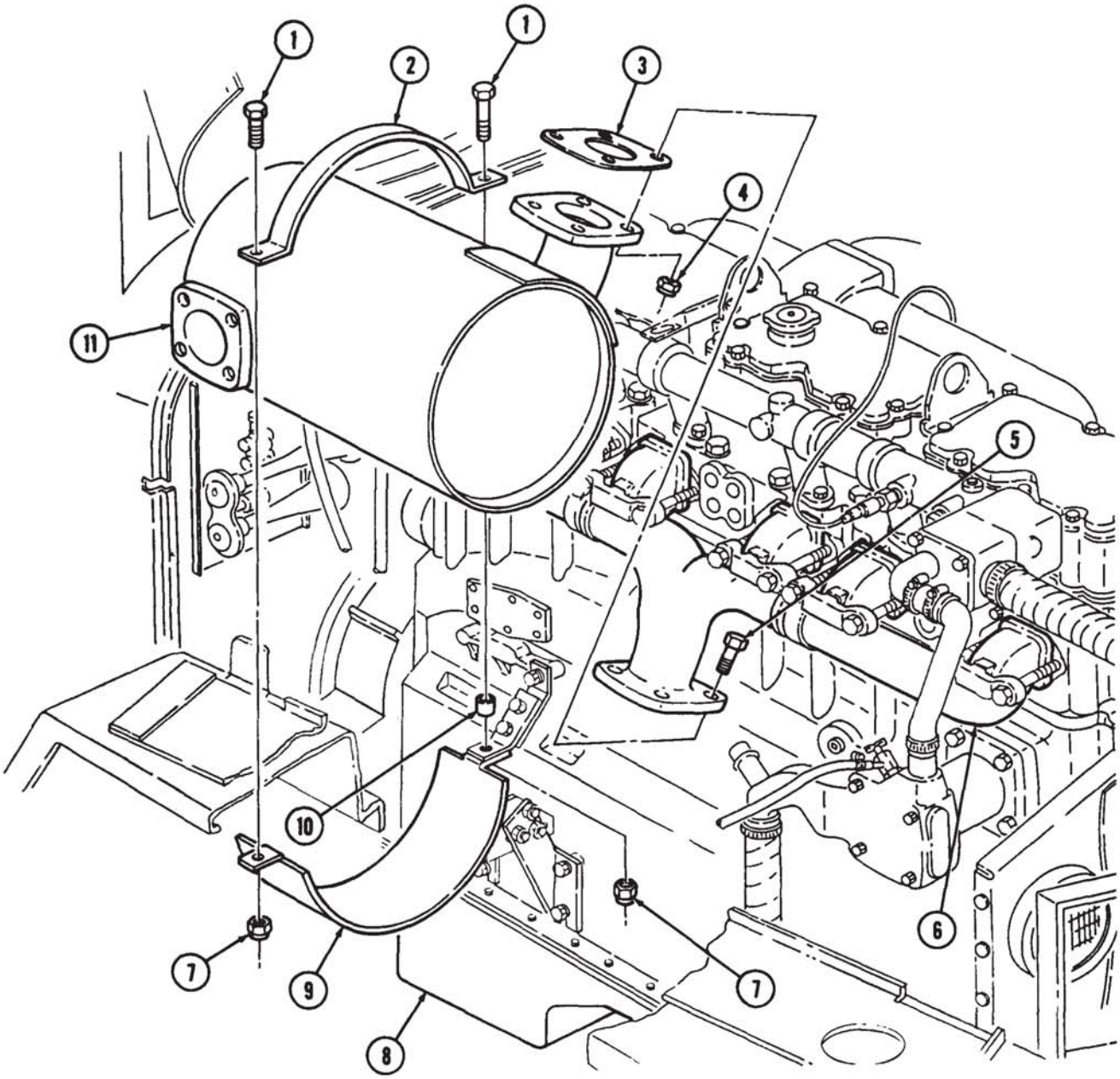

FOLLOW-ON TASKS:
- Install horizontal exhaust pipe (if removed) (para. 3-41).
- Install vertical exhaust pipe (if removed) (para. 3-40).
- Install oil dipstick and tube (para. 3-3).
- Install personnel hot water heater (para. 14-10).

3-43. EXHAUST MUFFLER BRACKET MAINTENANCE

THIS TASK COVERS:

a. **Removal**
b. **Installation**
c. **Adjustment**

INITIAL SETUP

APPLICABLE MODELS

All

MATERIALS/PARTS

Eight locknuts
Five lockwashers

REFERENCES (TM)

TM 9-2320-260-10
TM 9-2320-260-20P

EQUIPMENT CONDITION

- Parking brake set (TM 9-2320-260-10).
- Hood raised and secured (TM 9-2320-260-10).
- Exhaust muffler removed (para. 3-42).

a. Removal

1. Remove screw (1), lockwasher (2), and support brackets (3) and (18) from engine (8). Discard lockwasher (2).
2. Remove two locknuts (4), screws (19), four washers (5), and separate support brackets (3) and (18). Discard locknuts (4).
3. Remove three screws (12), lockwashers (11), washers (10), screw (14), lockwasher (15), washer (16), and two brackets (9) from engine (8). Discard lockwashers (11) and (15).
4. Remove six locknuts (6), screws (13), twelve washers (7), and two brackets (9) from bracket (17). Discard locknuts (6).

b. Installation

NOTE

Do not fully tighten nuts or screws until muffler and mounting brackets are installed.

1. Install two brackets (9) on bracket (17) with twelve washers (7), six screws (13), and new locknuts (6). Finger tighten locknuts (6).
2. Install two brackets (9) on engine (8) with three washers (10), new lockwashers (11), screws (12), washer (16), new lockwasher (15), and screw (14). Finger tighten screws (12) and (14).
3. Install support bracket (3) on support bracket (18) with four washers (5), two screws (19), and new locknuts (4). Finger tighten locknuts (4).
4. Install support brackets (3) and (18) on engine (8) with new lockwasher (2) and screw (1). Finger tighten screw (1).
5. Install exhaust muffler (para. 3-42).

3-43. EXHAUST MUFFLER BRACKET MAINTENANCE (Contd)

c. Adjustment

1. Tighten screw (1) 25-35 lb-ft (34-47 N•m).
2. Tighten two screws (19) and locknuts (4) 30-40 lb-ft (41-54 N•m).
3. Tighten three screws (12) 18-22 lb-ft (24-30 N•m).
4. Tighten screw (14) 25-35 lb-ft (34-47 N•m).
5. Tighten six screws (13) and locknuts (6) 25-30 lb-ft (34-41 N•m).

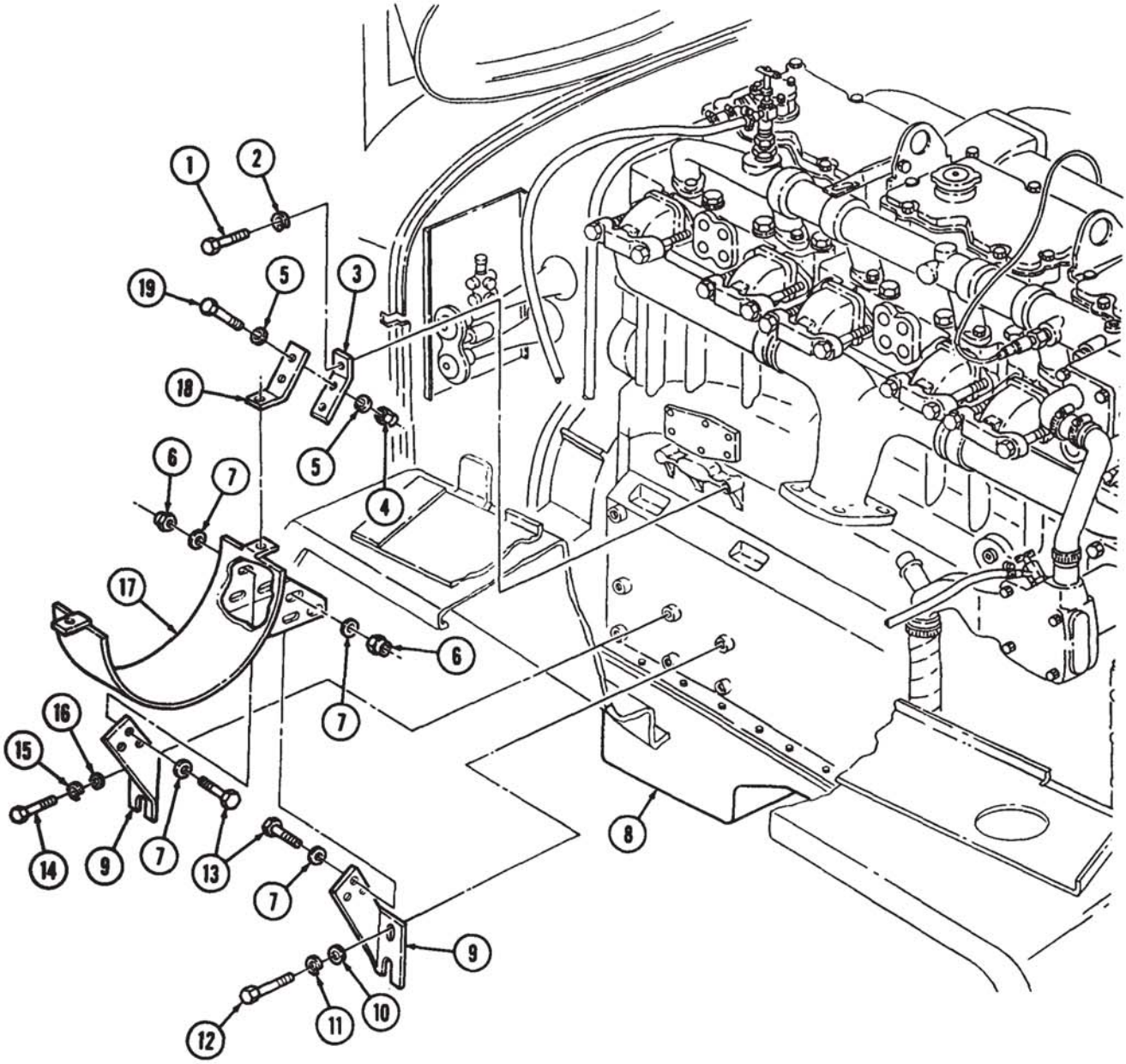

Section VII. COOLING SYSTEM MAINTENANCE

3-44. COOLING SYSTEM MAINTENANCE INDEX

PARA. NO.	TITLE	PAGE NO.
3-45.	Cooling System Servicing	3-84
3-46.	Cooling System Hoses Replacement	3-88
3-47.	Thermostat Replacement	3-90
3-48.	Surge Tank and Mounting Brackets Replacement	3-92
3-49.	Fan Hub Replacement	3-94
3-50.	Radiator and Mounting Brackets Replacement	3-96
3-51.	Radiator Fan Shrouds Replacement	3-98
3-52.	Fan Drivebelts Maintenance	3-99
3-53.	Fan Blade Replacement	3-101
3-54.	Water Pump Drivebelt Maintenance	3-102
3-55.	Water Pump Replacement	3-104

3-45. COOLING SYSTEM SERVICING

THIS TASK COVERS:

a. **Depressurizing System**
b. **Draining System**
c. **Cleaning and Flushing System**
d. **Filling System**

INITIAL SETUP

APPLICABLE MODELS
All

MATERIALS/PARTS
Antifreeze (Appendix C, Item 4)
Cleaning compound kit (Appendix C, Item 11)

REFERENCES (TM)
TM 9-2320-260-10
TM 9-2320-260-20P

EQUIPMENT CONDITION
- Parking brake set (TM 9-2320-260-10).
- Hood raised and secured (TM 9-2320-260-10).

GENERAL SAFETY INSTRUCTIONS
Cooling system must be depressurized to remove surge tank cap when engine temperature is above 175°F (79°C).

a. Depressurizing System

WARNING

Care must be taken while removing surge tank cap when engine temperature is above 175°F (79°C). Escaping steam or hot coolant may cause injury to personnel.

1. Open manifold vent valve (3) and radiator vent valve (4).

3-45. COOLING SYSTEM SERVICING (Contd)

NOTE

If engine is hot, place a thick cloth over surge tank cap and turn to first stop. Allow pressure to fully escape before removing cap.

2. Remove surge tank cap (2) from surge tank (1).
3. Close manifold vent valve (3) and radiator vent valve (4).

b. Draining System

NOTE

Have drainage container ready to catch coolant.

1. Open radiator drain valve (5) and allow coolant system to drain.
2. Inspect coolant for signs of rust and foreign particles. Clean and flush coolant system if heavily rusted or partially clogged (task c).
3. Close radiator drain valve (5).

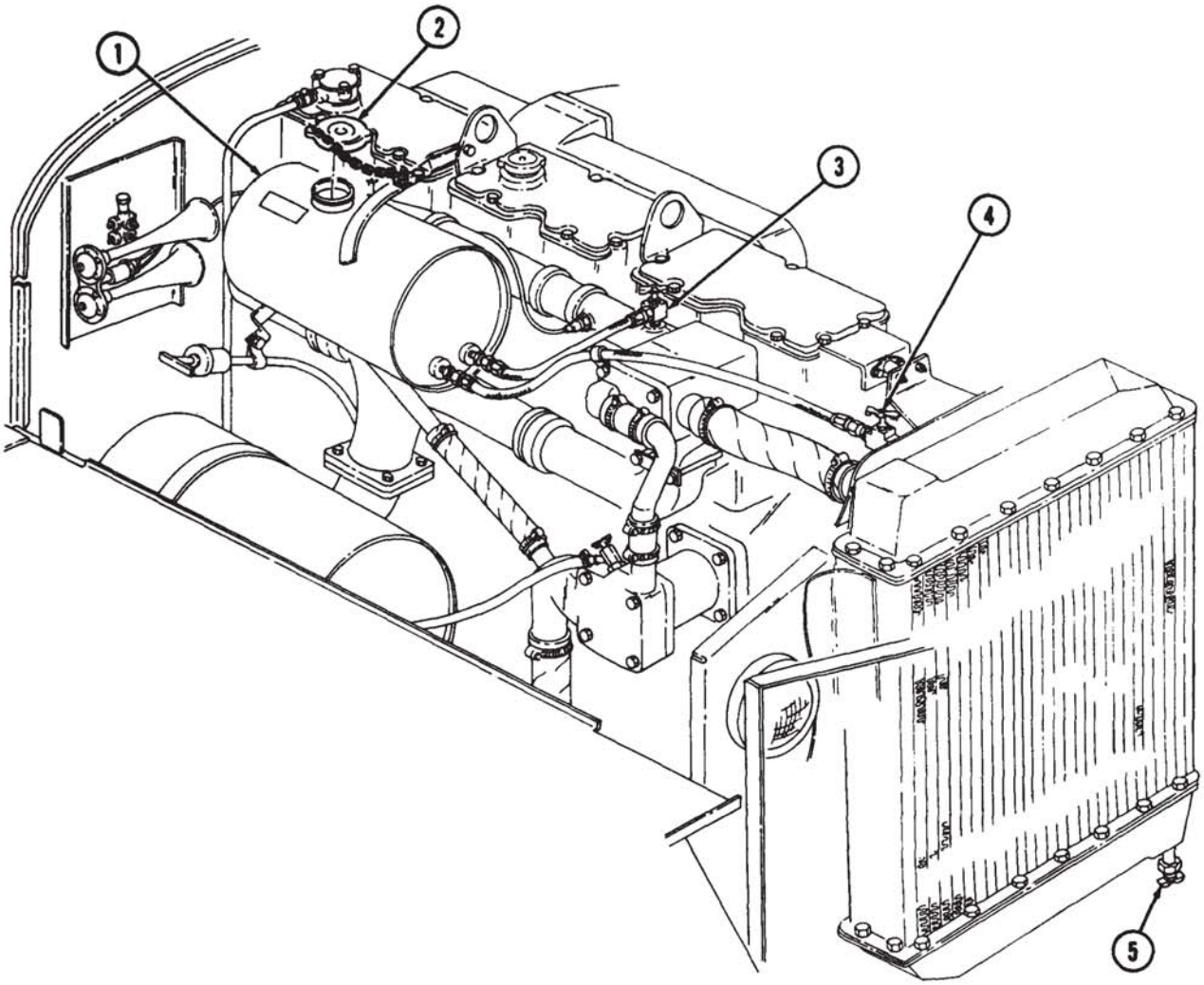

3-45. COOLING SYSTEM SERVICING (Contd)

c. Cleaning and Flushing System

Clean and flush radiator (3) and cooling system using cleaning compound kit. Follow instructions provided with kit.

d. Filling System

Table 3-1. Guide for Preparation of Antifreeze Solution.

Lowest Expected Ambient Temperature		Quarts/Liters of Antifreeze Required				Arctic Grade Antifreeze -90°F (-68°C) MIL-A-11755
°F	°C	WO/Heater Kit Qt	L	W/Heater Kit Qt	L	
+20	-7	6-1/4	6	8	8	Freezing point of -90°F (-68°C).
+10	-12	8	8	10-1/2	10	
0	-18	11	10	14	13	
-10	-23	13	12	17	16	Issued ready for use and must not be mixed with any other liquid.
-20	-29	14	13	18	17	
-30	-34	16	15	21	20	
-40	-40	17	16	22	21	
-50	-46	18	17	24	23	
-55	-48	19	18	25	24	
Below -60	Below -51	Use arctic grade antifreeze (-90°F) (-68°C)		Use arctic grade antifreeze (-90°F) (-68°C)		

NOTE

The cooling system for vehicles covered in this manual has an 8 gallon (32 quart) (30 liter) capacity system without heater kit and a 10.5 gallon (42 quart) (40 liter) capacity system with heater kit.

1. Fill cooling system with the required amount of coolant.
2. Install surge tank filler cap (2) on surge tank (1).
3. Start engine (TM 9-2320-260-10) and run engine at fast idle (800-1000 rpm) until engine temperature reaches 175°F (79°C). Stop engine.

WARNING

Care must be taken when removing surge tank filler cap when engine temperature is above 175°F (79°C). Steam or hot coolant under pressure may cause injury to personnel.

4. Depressurize cooling system (task a).
5. Check to see if coolant level in surge tank (1) is half full. Add coolant if required.
6. Install surge tank filler cap (2) on surge tank (1). Check system for leaks.

3-45. COOLING SYSTEM SERVICING (Contd)

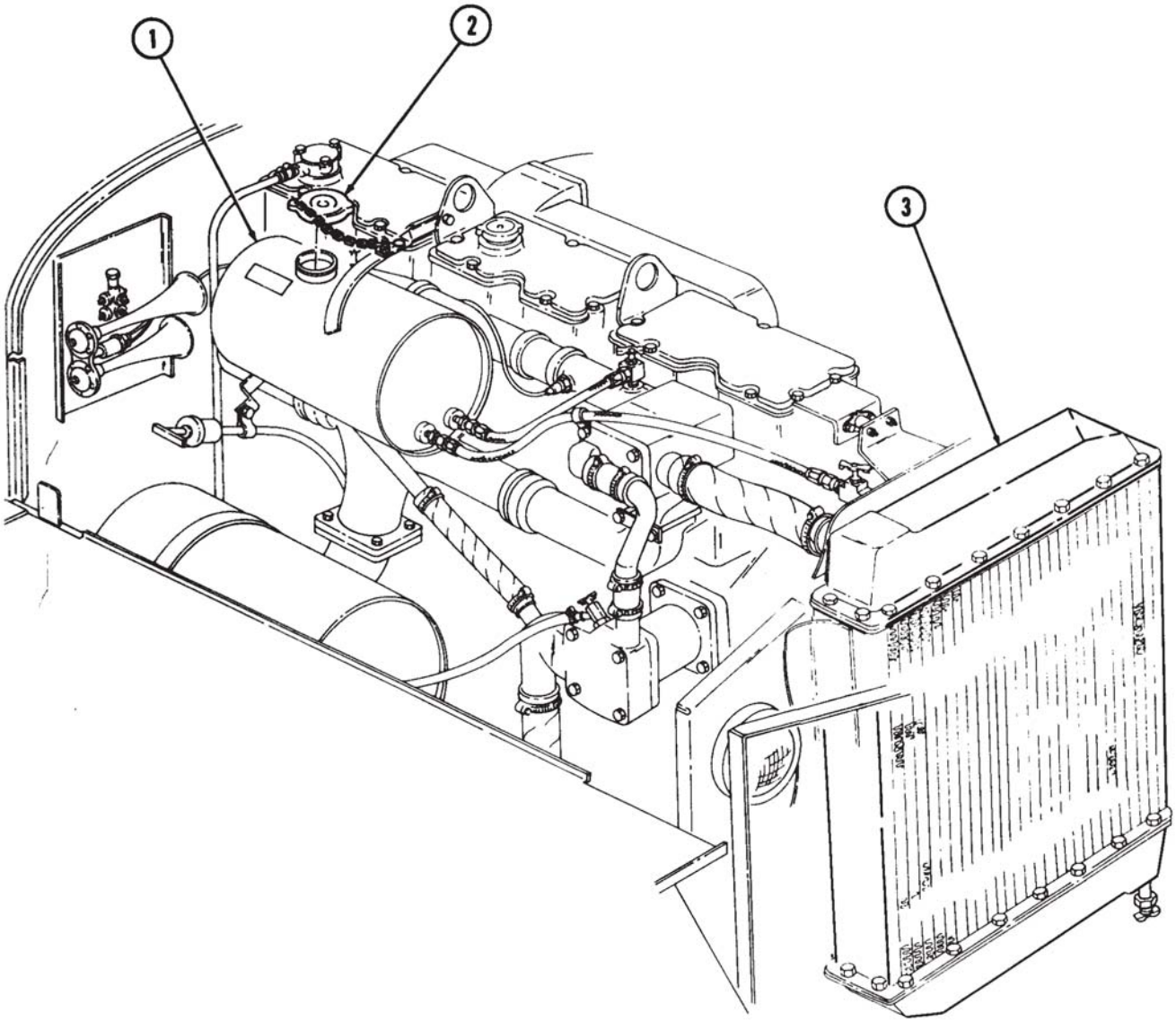

3-46. COOLING SYSTEM HOSES REPLACEMENT

THIS TASK COVERS:

a. Radiator Vent Hose and Manifold Return Hose Removal
b. Radiator Inlet Hose and Outlet Hose Removal
c. Engine Oil Cooler Hose Removal
d. Engine Oil Cooler Hose Installation
e. Radiator Inlet Hose and Outlet Hose Installation
f. Radiator Vent Hose and Manifold Return Hose Installation

INITIAL SETUP

APPLICABLE MODELS

All

MATERIALS/PARTS

Antiseize tape (Appendix C, Item 30)

REFERENCES (TM)

TM 9-2320-260-10
TM 9-2320-260-20P

EQUIPMENT CONDITION

- Parking brake set (TM 9-2320-260-10).
- Hood raised and secured (TM 9-2320-260-10).
- Cooling system drained (para. 3-45).

a. Radiator Vent Hose and Manifold Return Hose Removal

1. Remove screw (5), clamp (6), and radiator vent hose (7) from rocker arm cover (4).
2. Disconnect radiator vent hose (7) from surge tank (20) and adapter (8).
3. Remove adapter (8), radiator vent valve (9), and nipple (10) from radiator (14).
4. Disconnect manifold return hose (2) from surge tank (20) and manifold vent valve (3).
5. Remove manifold vent valve (3) from water manifold (1).

b. Radiator Inlet Hose and Outlet Hose Removal

1. Loosen two clamps (11) and disconnect radiator inlet hose (12) from radiator (14) and thermostat housing cover (19).
2. Loosen two clamps (15) and disconnect radiator outlet hose (16) from radiator (14) and engine oil cooler (13).

c. Engine Oil Cooler Hose Removal

Loosen two clamps (17) and disconnect engine oil cooler hose (18) from surge tank (20) and engine oil cooler (13).

d. Engine Oil Cooler Hose Installation

Connect engine oil cooler hose (18) to surge tank (20) and engine oil cooler (13). Tighten clamps (17).

e. Radiator Inlet Hose and Outlet Hose Installation

1. Connect radiator outlet hose (16) to radiator (14) and engine oil cooler (13). Tighten clamps (15).
2. Connect radiator inlet hose (12) to radiator (14) and thermostat housing cover (19). Tighten clamps (11).

3-46. COOLING SYSTEM HOSES REPLACEMENT (Contd)

f. Radiator Vent Hose and Manifold Return Hose Installation

1. Apply antiseize tape to male threads of radiator vent valve (9), adapter (8), manifold vent valve (3), nipple (10), radiator vent hose (7), and manifold return hose (2).
2. Install manifold vent valve (3) on water manifold (1).
3. Connect manifold return hose (2) to surge tank (20) and manifold vent valve (3).
4. Install nipple (10), radiator vent valve (9), and adapter (8) on radiator (14).
5. Connect radiator vent hose (7) to surge tank (20) and adapter (8).
6. Install radiator vent hose (7) on rocker arm cover (4) with clamp (6) and screw (5).

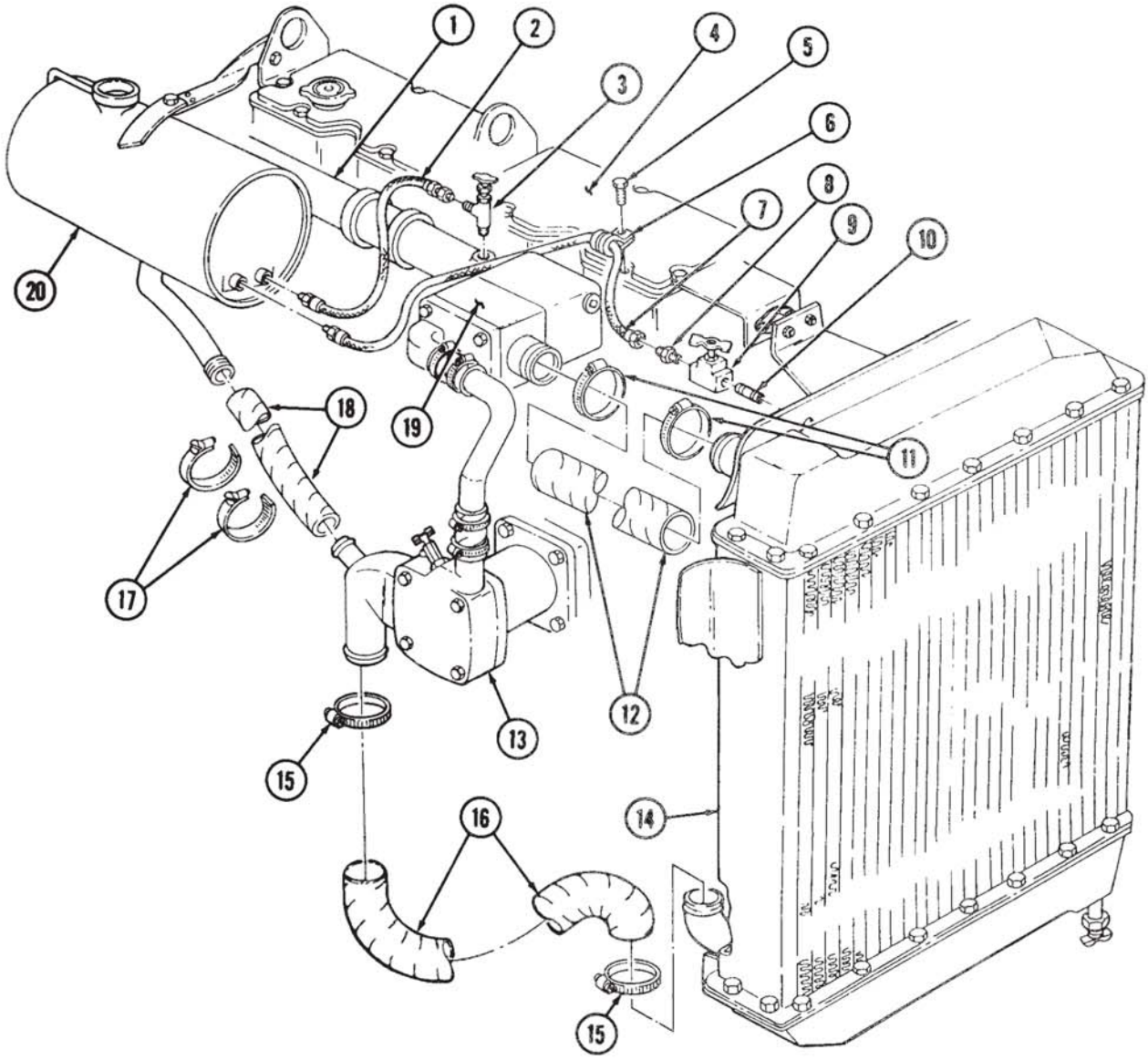

FOLLOW-ON TASKS: • Fill cooling system to proper level (para. 3-45).
• Start engine (TM 9-2320-260-10) and check coolant system for leaks.

3-47. THERMOSTAT REPLACEMENT

THIS TASK COVERS:

a. Removal

b. Installation

INITIAL SETUP

APPLICABLE MODELS

All

MATERIALS/PARTS

Seal
Gasket
Four lockwashers

REFERENCES (TM)

TM 9-2320-260-10
TM 9-2320-260-20P

EQUIPMENT CONDITION

- Parking brake set (TM 9-2320-260-10).
- Hood raised and secured (TM 9-2320-260-10).
- Cooling system drained (para. 3-45).

a. Removal

1. Remove two clamps (8) and hose (9) from thermostat housing cover (3) and radiator (10).
2. Remove two clamps (15) and hose (16) from bypass tube (11) and thermostat housing cover (3).
3. Remove two clamps (12), bypass tube (11), and hose (13) from engine oil cooler (14).
4. Remove four screws (1), lockwashers (2), and thermostat housing cover (3) from water manifold (4). Discard lockwashers (2).
5. Remove seal (7), thermostat (6), and gasket (5) from water manifold (4). Discard seal (7) and gasket (5).

b. Installation

1. Position new gasket (5), thermostat (6), and new seal (7) on water manifold (4).
2. Install thermostat housing cover (3) on water manifold (4) with four new lockwashers (2) and screws (1).
3. Install hose (13) and bypass tube (11) on engine oil cooler (14) with two clamps (12).
4. Install hose (16) on bypass tube (11) and thermostat housing cover (3) with two clamps (15).
5. Install hose (9) on thermostat housing cover (3) and radiator (10) with two clamps (8).

3-47. THERMOSTAT REPLACEMENT (Contd)

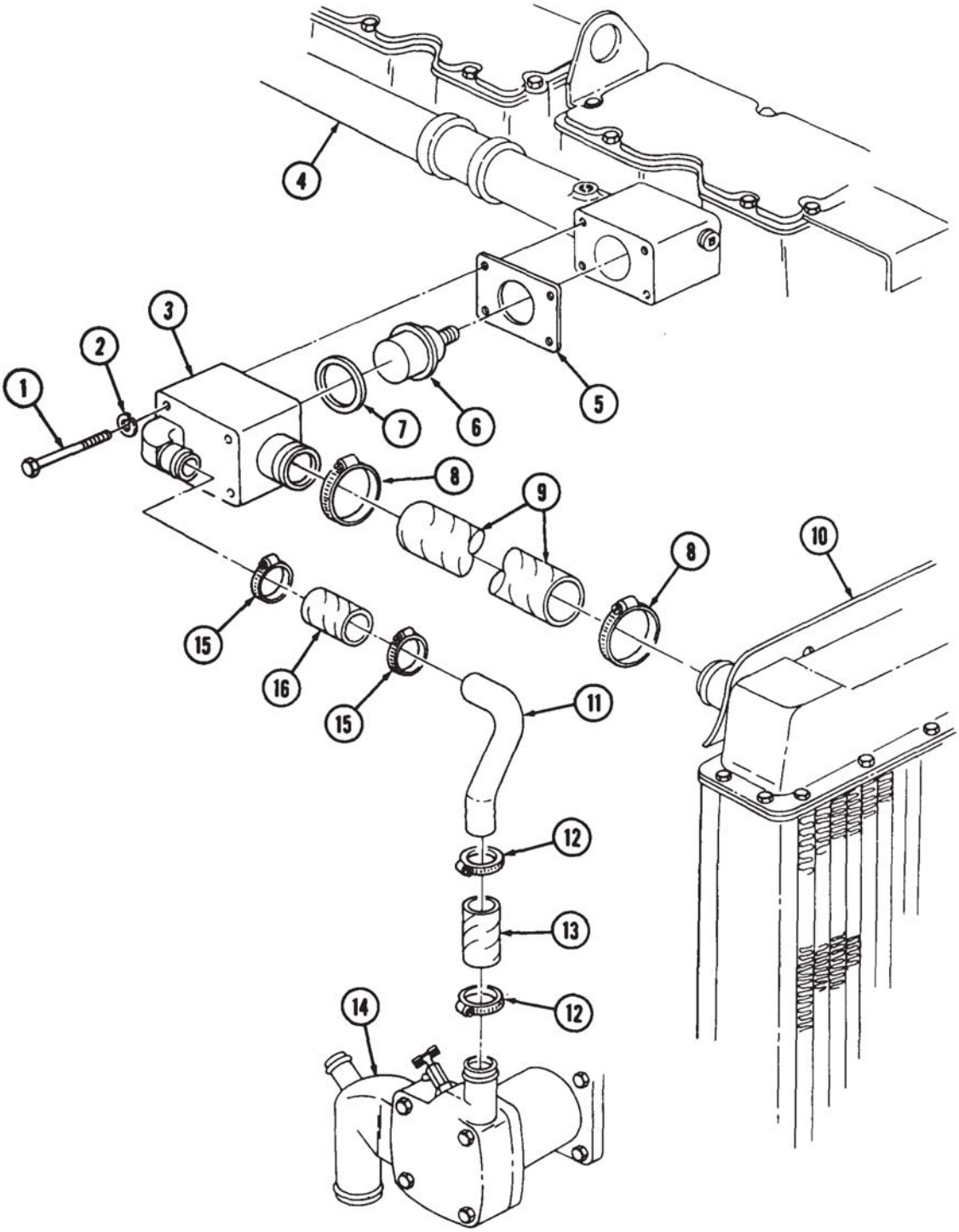

FOLLOW-ON TASKS: • Fill cooling system to proper level (para. 3-45).
• Start engine (TM 9-2320-260-10) and check coolant system for leaks and instrument temperature gage for normal reading.

3-48. SURGE TANK AND MOUNTING BRACKETS REPLACEMENT

THIS TASK COVERS:

a. Removal

b. Installation

INITIAL SETUP

APPLICABLE MODELS

All

MATERIALS/PARTS

Three locking plates
Locknut
Lockwasher
Antiseize compound (Appendix C, Item 5)
Antiseize tape (Appendix C, Item 30)

REFERENCES (TM)

TM 9-2320-260-10
TM 9-2320-260-20P

EQUIPMENT CONDITION

- Parking brake set (TM 9-2320-260-10).
- Hood raised and secured (TM 9-2320-260-10).
- Cooling system drained (para. 3-45).

a. Removal

1. Disconnect radiator vent hose (13) and manifold return hose (12) from surge tank (19).
2. Remove two clamps (14) and hose (15) from surge tank (19) and engine oil cooler (10).
3. Remove surge tank filler cap (1) and retaining chain (2) from surge tank (19) and support bracket (5).
4. Remove screw (4), lockwasher (3), and surge tank (19) from support bracket (5). Discard lockwasher (3).
5. Remove locknut (9), screw (6), washer (7), and support bracket (5) from engine lifting eye (8). Discard locknut (9).
6. Bend tabs of three locking plates (17) away from screws (18).
7. Remove three screws (18), locking plates (17), washers (16), and surge tank (19) from exhaust manifold (11). Discard locking plates (17).

b. Installation

1. Apply antiseize compound to threads of three screws (18).
2. Apply antiseize tape to male threads of radiator vent hose (13) and manifold return hose (12).
3. Install surge tank (19) on exhaust manifold (11) with three washers (16), new locking plates (17), and screws (18). Tighten screws (18) 40-45 lb-ft (54-61 N•m).
4. Bend tabs of new locking plates (17) over surface of screws (18).
5. Install support bracket (5) on engine lifting eye (8) with washer (7), screw (6), and new locknut (9).
6. Install surge tank (19) on support bracket (5) with new lockwasher (3) and screw (4).
7. Install retaining chain (2) and surge tank filler cap (1) on support bracket (5) and surge tank (19).
8. Install hose (15) on surge tank (19) and engine oil cooler (10) with two clamps (14).
9. Connect radiator vent hose (13) and manifold return hose (12) on surge tank (19).

3-48. SURGE TANK AND MOUNTING BRACKETS REPLACEMENT (Contd)

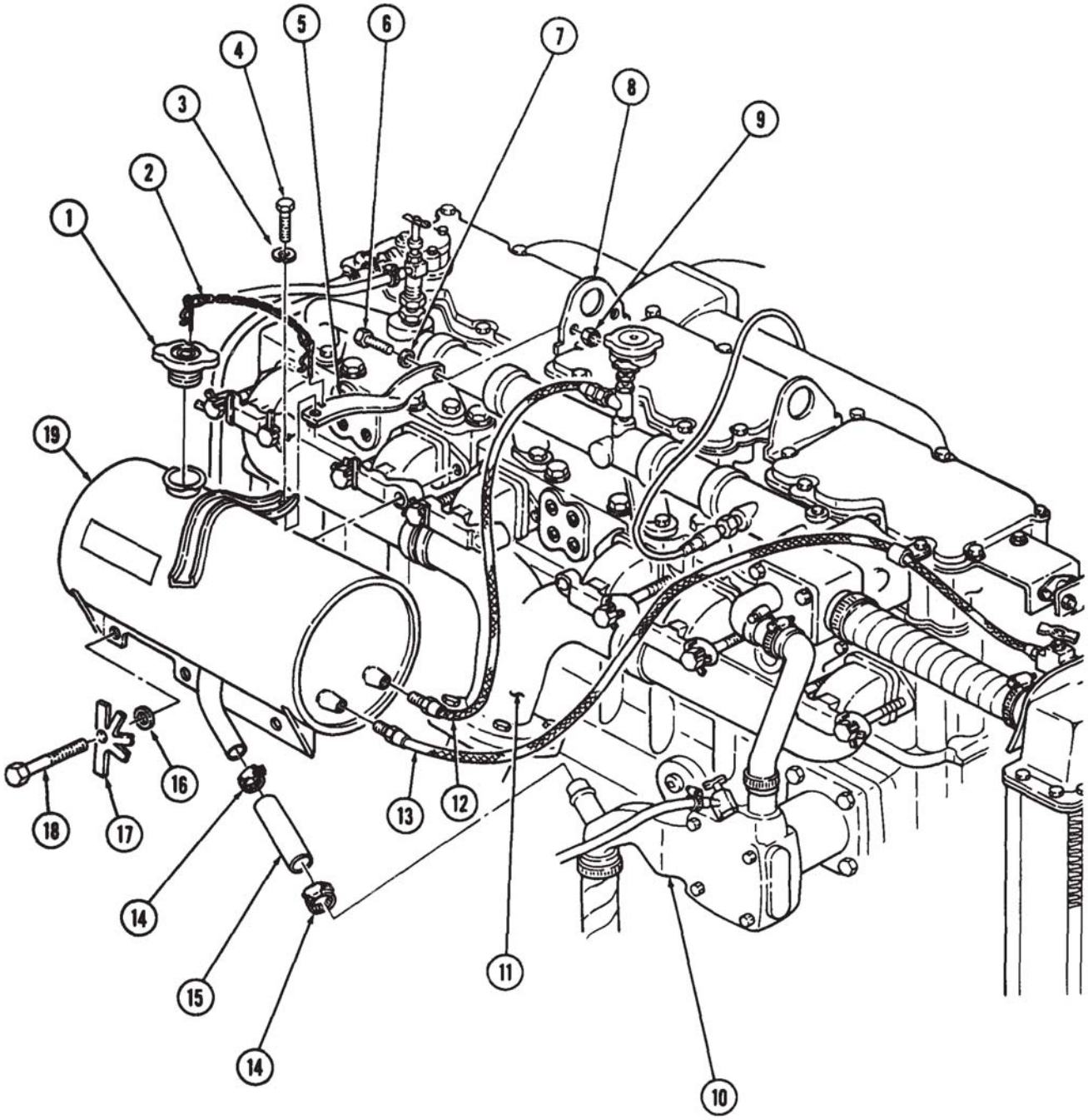

FOLLOW-ON TASKS: • **Fill cooling system to proper level (para. 3-45).**
Start engine (TM 9-2320-260-10) and check coolant system for leaks.

3-49. FAN HUB REPLACEMENT

THIS TASK COVERS:

a. Removal

b. Installation

INITIAL SETUP

APPLICABLE MODELS

All

MATERIALS/PARTS

Lockwasher

REFERENCES (TM)

TM 9-2320-260-10
TM 9-2320-260-20P

EQUIPMENT CONDITION

- Parking brake set (TM 9-2320-260-10).
- Hood raised and secured (TM 9-2320-260-10).
- Fan blade removed (para. 3-53).
- Alternator drivebelts removed (para. 4-4).

a. Removal

NOTE

Fan hub mounting screws are different sizes. Tag screws for installation.

1. Remove screw (9), lockwasher (10), and alternator adjusting arm (11) from fan hub (6). Discard lockwasher (10).
2. Remove three screws (5), washers (4), and fan hub (6) from pawl (8), hub support (2), and engine (1).
3. Remove screw (7) and pawl (8) from engine (1).
4. Remove screw (3) and hub support (2) from engine (1).

b. Installation

1. Install hub support (2) on engine (1) with screw (3).
2. Install pawl (8) on engine (1) with screw (7).

NOTE

Tightening of fan hub mounting screws is done during adjustment of fan drivebelts (para. 3-52).

3. Install fan hub (6) on engine (1), hub support (2), and pawl (8) with three washers (4) and screws (5). Finger tighten screws (5).
4. Install alternator adjusting arm (11) on fan hub (6) with new lockwasher (10) and screw (9). Finger tighten screw (9).

3-49

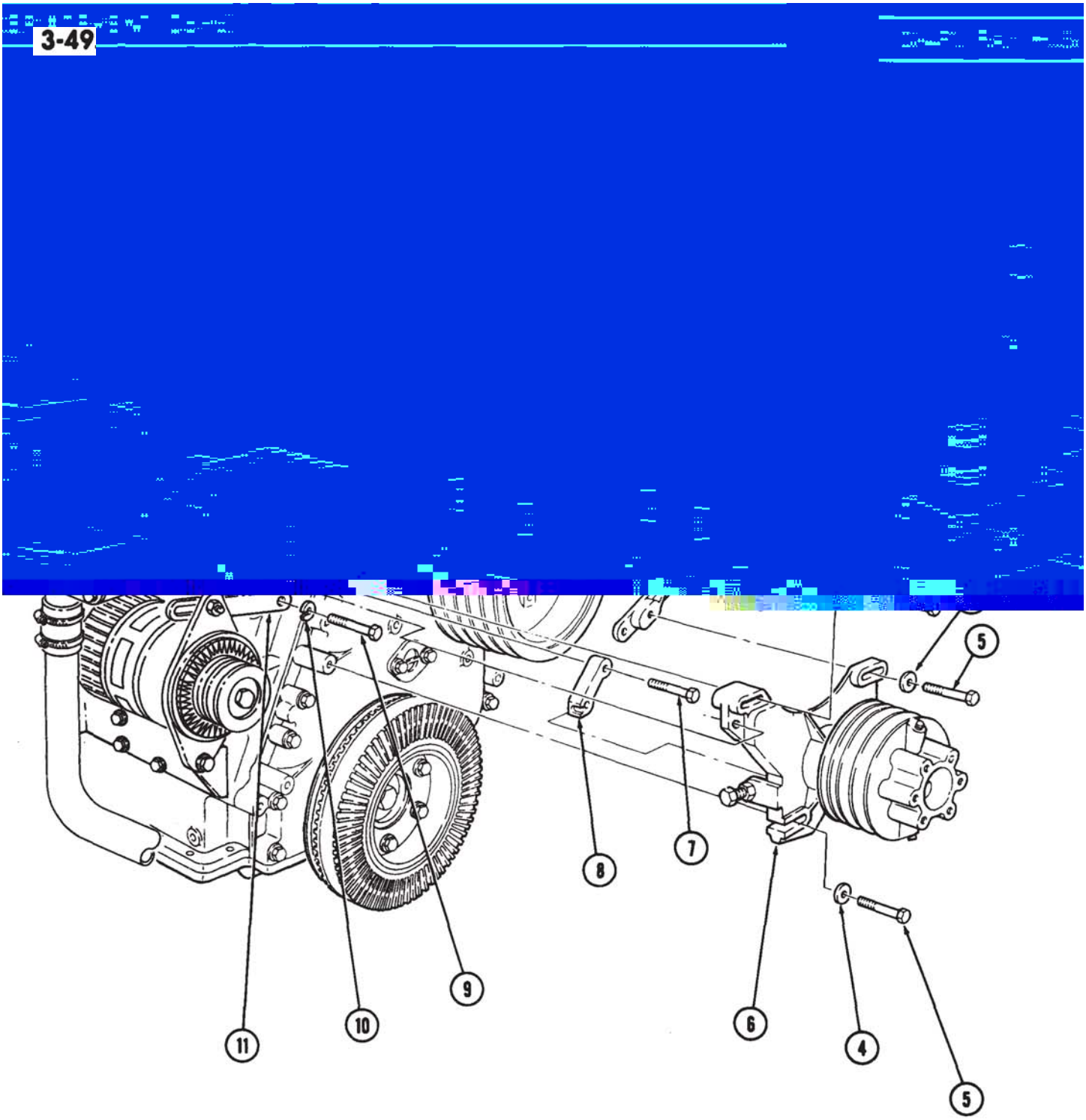

FOLLOW-ON TASKS: • Install alternator drivebelts (para. 4-4).
• Install fan blade (para. 3-53).

3-50. RADIATOR AND MOUNTING BRACKETS REPLACEMENT

THIS TASK COVERS:

a. Removal

b. Installation

INITIAL SETUP

APPLICABLE MODELS
All

MATERIALS/PARTS
Six locknuts
Six lockwashers
Four insulators

REFERENCES (TM)
TM 9-2320-260-10
TM 9-2320-260-20P

EQUIPMENT CONDITION
- Parking brake set (TM 9-2320-260-10).
- Hood raised and secured (TM 9-2320-260-10).
- Brushguard removed (para. 11-5).
- Radiator hoses removed (para. 3-46).

a. Removal

1. Remove two locknuts (4), screws (8), and washers (7) from mount (6) and bracket (5). Discard locknuts (4).
2. Remove two locknuts (13), washers (14), and outer insulators (15) from radiator mounting studs (21) and crossmember (17). Discard locknuts (13) and insulators (15).

NOTE

Assistant will help with step 3.

3. Remove radiator (22) from crossmember (17).
4. Remove four nuts (1), lockwashers (2), baffle (3), and bracket (5) from radiator (22). Discard lockwashers (2).
5. Remove two inner insulators (16) from radiator mounting studs (21). Discard insulators (16).
6. Remove two screws (9), lockwashers (10), and bracket (11) with mount (6) from engine (12). Discard lockwashers (10).
7. Remove two locknuts (18), screws (20), washers (19), and mount (6) from bracket (11). Discard locknuts (18).

b. Installation

1. Install mount (6) on bracket (11) with two washers (19), screws (20), and new locknuts (18).
2. Install bracket (11) with mount (6) on engine (12) with two new lockwashers (10) and screws (9).
3. Install two new inner insulators (16) on radiator mounting studs (21).
4. Install bracket (5) and baffle (3) on radiator (22) with four new lockwashers (2) and nuts (1).

NOTE

Assistant will help with step 5.

5. Install radiator (22) on crossmember (17) with two new outer insulators (15), washers (14), and new locknuts (13).
6. Install bracket (5) to mount (6) with two washers (7), screws (8), and new locknuts (4).

3-50. RADIATOR AND MOUNTING BRACKETS REPLACEMENT (Contd)

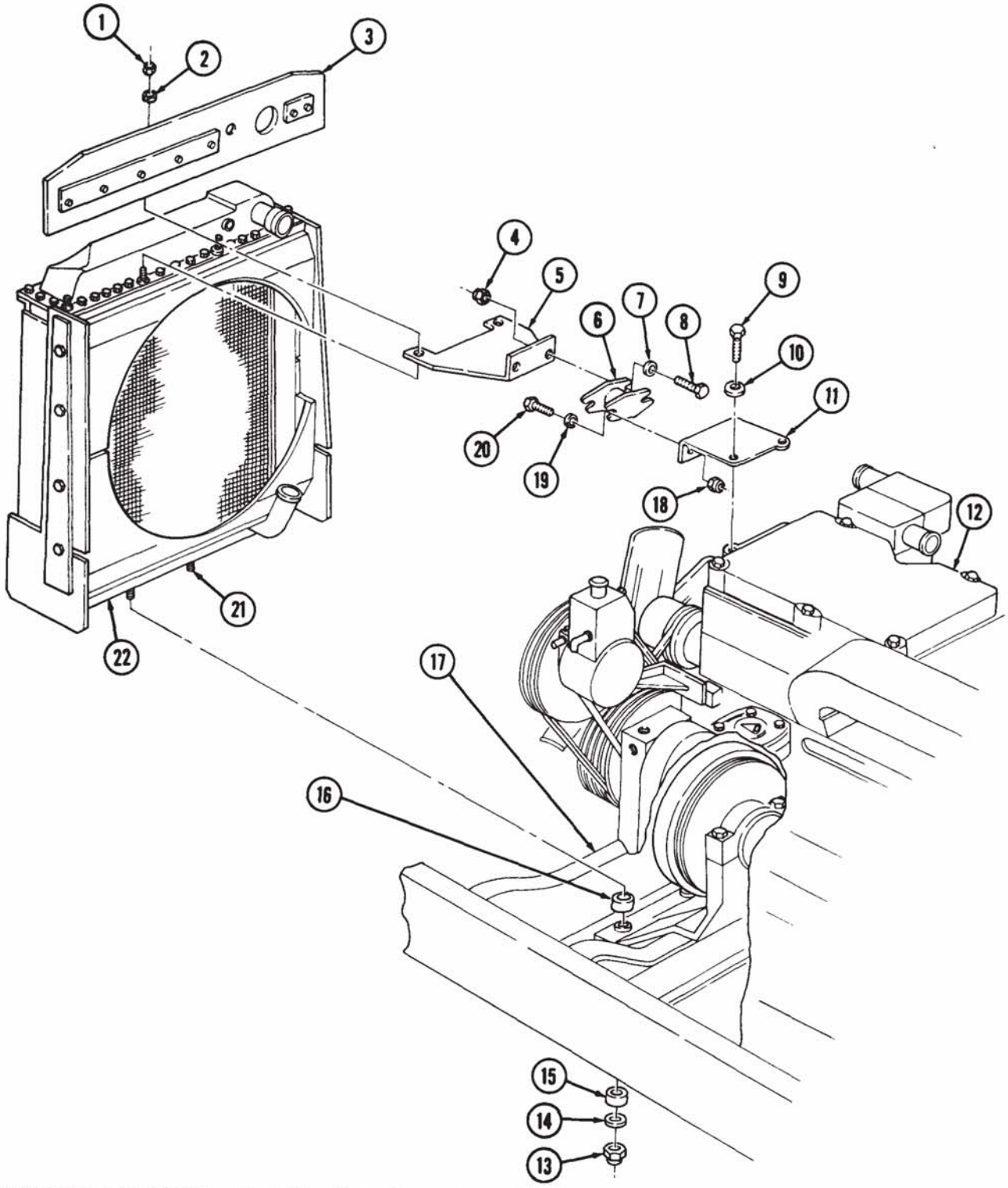

FOLLOW-ON TASKS:
- Install radiator hoses (para. 3-46).
- Install brushguard (para. 11-5).
- Start engine (TM 9-2320-260-10) and check for coolant leaks.

3-51. RADIATOR FAN SHROUDS REPLACEMENT

THIS TASK COVERS:

a. Removal

b. Installation

INITIAL SETUP

APPLICABLE MODELS
All

MATERIALS/PARTS
Four lockwashers
Eight screw-assembled lockwashers

REFERENCES (TM)
TM 9-2320-260-10
TM 9-2320-260-20P

EQUIPMENT CONDITION
- Parking brake set (TM 9-2320-260-10).
- Hood raised and secured (TM 9-2320-260-10).
- Radiator removed (para. 3-50).

a. Removal

1. Remove eight screw-assembled lockwashers (3), two strips (4), and shields (5) from radiator (2). Discard screw-assembled lockwashers (3).
2. Remove upper fan shroud (1) from radiator (2).
3. Remove four nuts (6), lockwashers (7), washers (8), baffle (9), four washers (10), and lower fan shroud (11) from radiator (2). Discard lockwashers (7).

b. Installation

1. Position lower fan shroud (11) on radiator (2) and install with four washers (10), baffle (9), four washers (8), new lockwashers (7), and nuts (6).
2. Install upper fan shroud (1) on radiator (2).
3. Install two shields (5) and strips (4) on radiator (2) with eight new screw-assembled lockwashers (3).

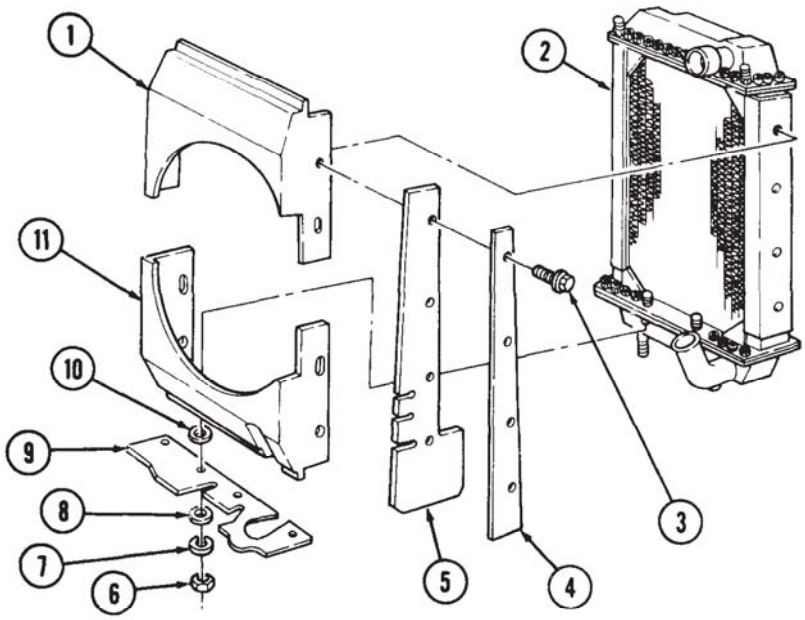

FOLLOW-ON TASK: Install radiator (para. 3-50).

3-52. FAN DRIVEBELTS MAINTENANCE

THIS TASK COVERS:

a. Removal
b. Inspection
c. Installation
d. Adjustment

INITIAL SETUP

APPLICABLE MODELS
All

REFERENCES (TM)
TM 9-2320-260-10
TM 9-2320-260-20P

EQUIPMENT CONDITION
- Parking brake set (TM 9-2320-260-10).
- Hood raised and secured (TM 9-2320-260-10).
- Fan blade removed (para. 3-53)

NOTE

Fan drivebelts must be replaced in pairs.

a. Removal

1. Loosen two screws (2) on alternator adjusting arm (1).
2. Loosen two nuts (14) and screws (13) on each side of alternator mounting bracket (12).
3. Rotate alternator (15) toward engine (6) to loosen alternator drivebelts (5).
4. Loosen three screws (3) on fan pulley hub (4).
5. Loosen jamnut (10) and fan pulley adjusting screw (11).
6. Remove fan drivebelts (8) from fan pulley (9) and accessory drive pulley (7).

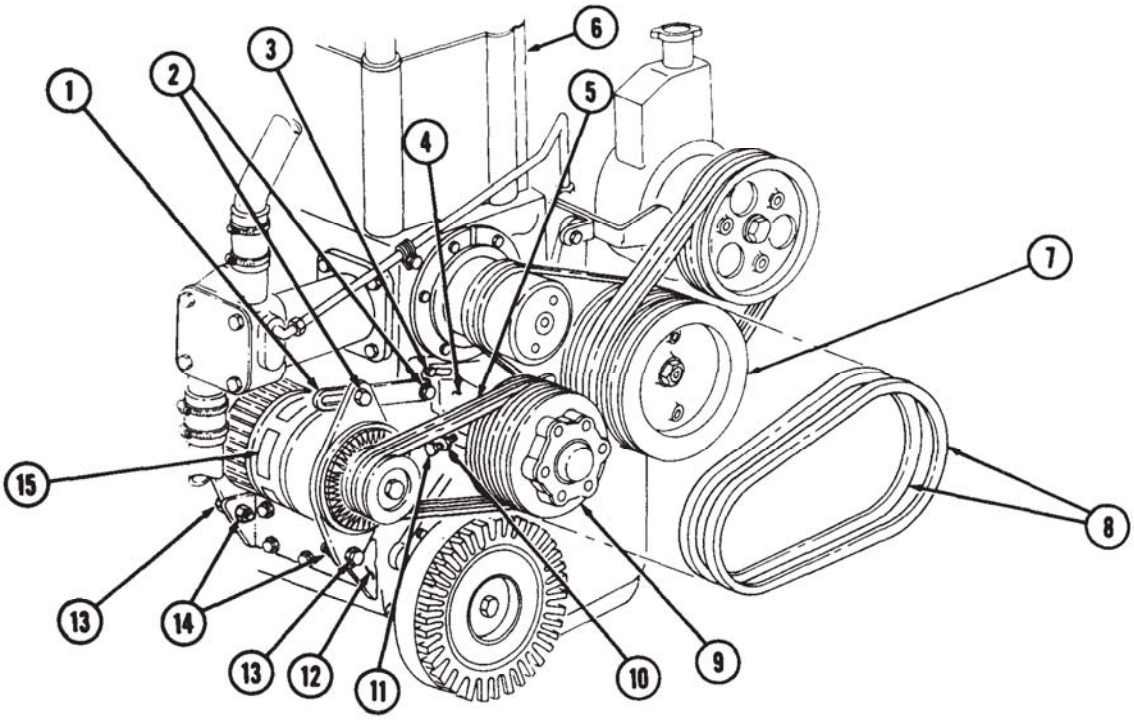

3-52. FAN DRIVEBELTS MAINTENANCE (Contd)

b. Inspection

Inspect fan drivebelts (8) for glazing, cracks, splits, and breaks. Replace fan drivebelts (8) if glazed, cracked, split, or broken.

c. Installation

1. Install fan drivebelts (8) on first and second groove of fan pulley (9) and first and second groove of accessory drive pulley (7).
2. Tighten fan pulley adjusting screw (11) until fan drivebelts (8) are tight. Tighten jamnut (10).
3. Tighten three screws (3) on fan pulley hub (4).

NOTE

Assistant will help with steps 4, 5, and 6.

4. Rotate alternator (15) away from engine (6) until alternator drivebelts (5) are tight.
5. Tighten two screws (2) on alternator adjusting arm (1) 25-31 lb-ft (34-42 N•m).
6. Tighten nut (14) and screw (13) on each side of alternator mounting bracket (12) 50-55 lb-ft (68-75 N•m).

d. Adjustment

1. Loosen two screws (2) on alternator adjusting arm (1).
2. Loosen nut (14) and screw (13) on each side of alternator mounting bracket (12).
3. Loosen three screws (3) on fan pulley hub (4).
4. Loosen jamnut (10) and tighten or loosen fan pulley adjusting screw (11) until fan drivebelts (8) have proper tension.
5. Tighten jamnut (10).
6. Tighten three screws (3) on fan pulley hub (4).
7. Check alternator drivebelt adjustment (para. 4-4).

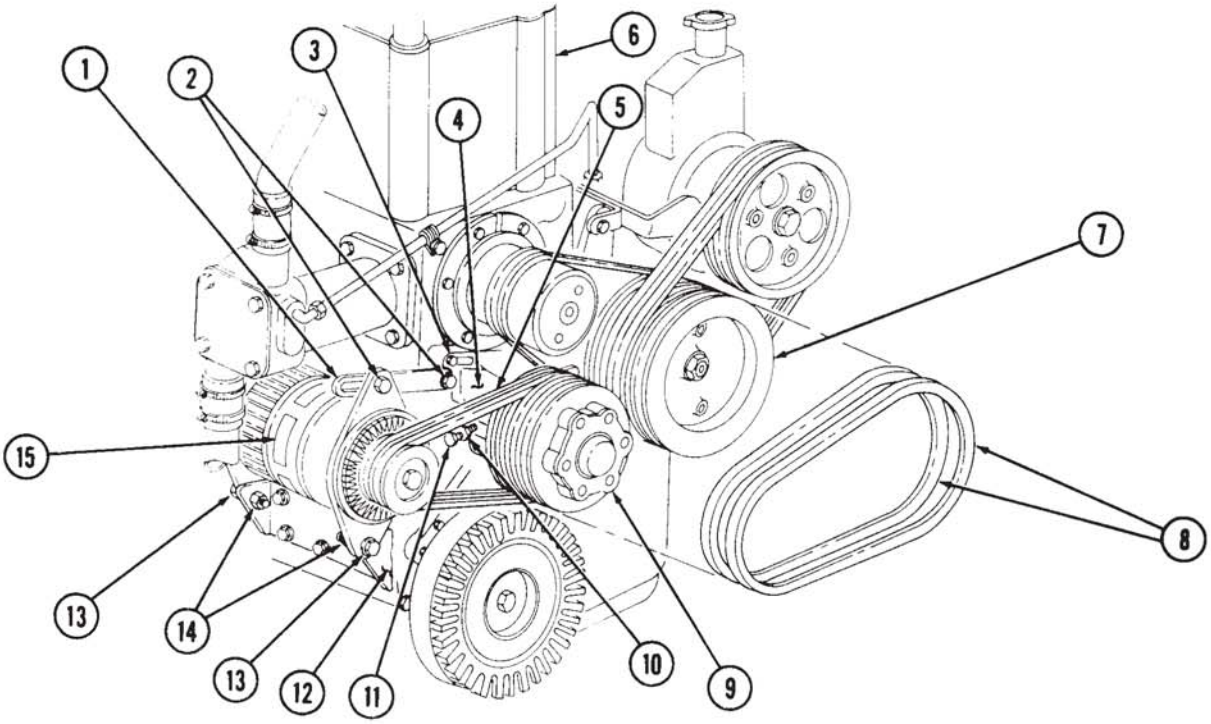

FOLLOW-ON TASK: Install fan blade (para. 3-53).

3-53. FAN BLADE REPLACEMENT

THIS TASK COVERS:

a. Removal **b. Installation**

INITIAL SETUP

APPLICABLE MODELS
All

MATERIALS/PARTS
Six lockwashers
Gasket

REFERENCES (TM)
TM 9-2320-260-10
TM 9-2320-260-20P

EQUIPMENT CONDITION
- Parking brake set (TM 9-2320-260-10).
- Hood raised and secured (TM 9-2320-260-10).
- Radiator removed (para. 3-50).

GENERAL SAFETY INSTRUCTIONS
Use care when removing fan blade.

a. Removal

WARNING

Use care when removing fan blade. Failure to do so may cause injury to personnel.

1. Remove six screws (2) and lockwashers (3) from fan blade (1) and pulley (6). Discard lockwashers (3).
2. Remove fan blade (1), spacer (4), and gasket (5) from pulley (6). Discard gasket (5).

b. Installation

Position new gasket (5), spacer (4), and fan blade (1) on pulley (6) and install with six new lockwashers (3) and screws (2).

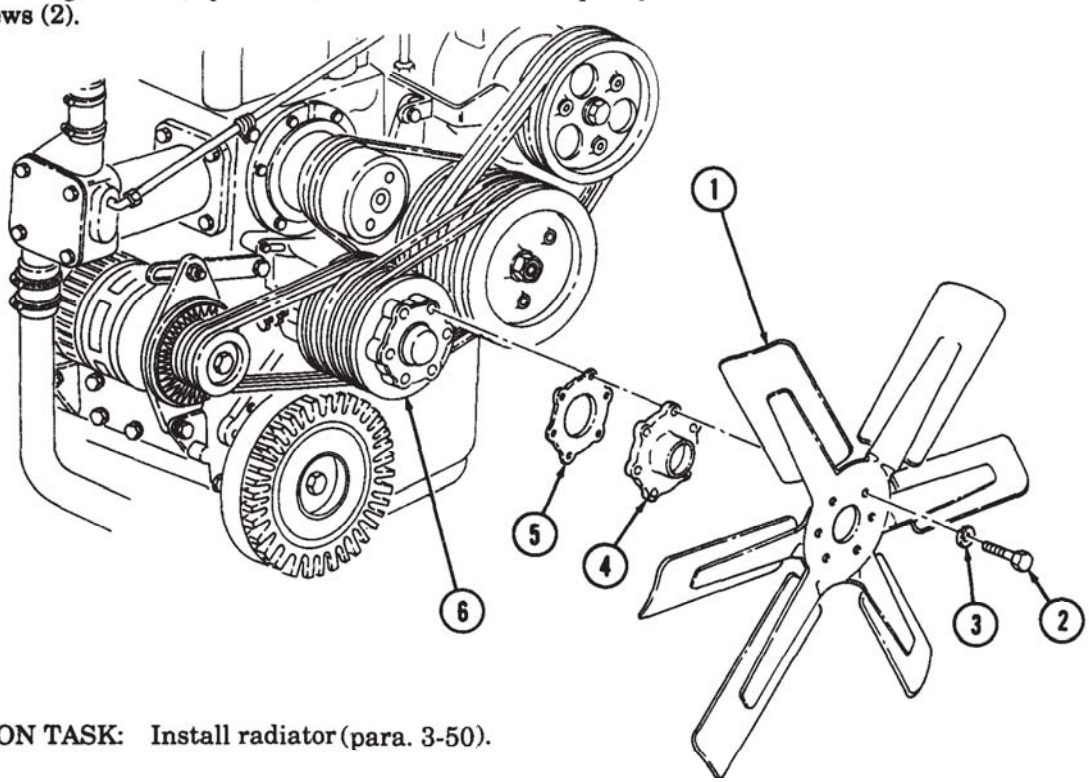

FOLLOW-ON TASK: Install radiator (para. 3-50).

3-54. WATER PUMP DRIVEBELT MAINTENANCE

THIS TASK COVERS:

a. Removal
b. Inspection
c. Installation
d. Adjustment

INITIAL SETUP

APPLICABLE MODELS
All

REFERENCES (TM)
TM 9-2320-260-10
TM 9-2320-260-20P

EQUIPMENT CONDITION
- Parking brake set (TM 9-2320-260-10).
- Hood raised and secured (TM 9-2320-260-10).
- Power steering pump drivebelts removed (para. 9-16).

a. Removal

1. Loosen six screws (1) on water pump clamp ring (2).
2. Place pry bar in slot of water pump housing (3) and turn water pump housing (3) clockwise to loosen water pump drivebelt (5).
3. Remove water pump drivebelt (5) from water pump pulley (4) and accessory drive pulley (6).

b. Inspection

Inspect water pump drivebelt (5) for glazing, cracks, splits, and breaks. Replace water pump drivebelt (5) if glazed, cracked, split, or broken.

c. Installation

1. Install water pump drivebelt (5) on water pump pulley (4) and on fifth groove of accessory drive pulley (6).

NOTE

Assistant will help with steps 2 and 3.

2. Place pry bar in slot of water pump housing (3) and turn water pump housing (3) counterclockwise until water pump drivebelt (5) is tight.
3. Tighten six screws (1) on water pump clamp ring (2).

d. Adjustment

1. Loosen six screws (1) on water pump clamp ring (2).

NOTE

Assistant will help with steps 2 and 3.

2. Place pry bar in slot of water pump housing (3) and turn water pump housing (3) until water pump drivebelt (5) has proper tension.
3. Tighten six screws (1) on water pump clamp ring (2).

3-54. WATER PUMP DRIVEBELT MAINTENANCE (Contd)

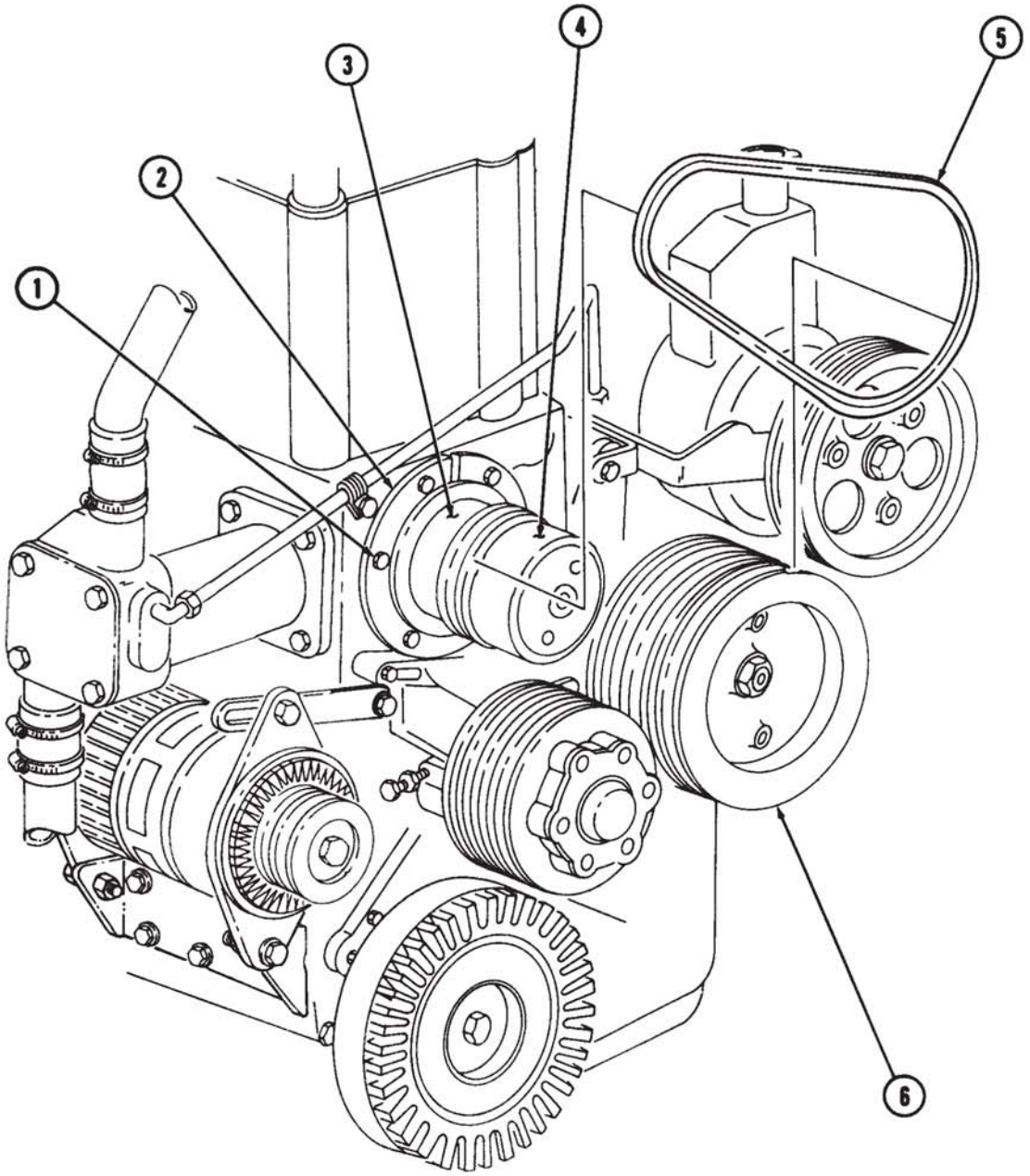

FOLLOW-ON TASK: Install power steering pump drivebelts (para. 9-16).

CHAPTER 4
ELECTRICAL SYSTEM MAINTENANCE

Section I. Charging System Maintenance (page 4-1)
Section II. Starting System Maintenance (page 4-10)
Section III. Instruments, Sending Units, Switches, and Horn Maintenance (page 4-13)
Section IV. Lighting System Maintenance (page 4-66)
Section V. Battery System Maintenance (page 4-90)
Section VI. Wiring Circuits and Harness Maintenance (page 4-106)

Section I. CHARGING SYSTEM MAINTENANCE

4-1. CHARGING SYSTEM MAINTENANCE INDEX

PARA. NO.	TITLE	PAGE NO.
4-2.	Alternator (60 Ampere) and Mounting Brackets Maintenance	4-1
4-3.	Alternator Pulley Replacement	4-6
4-4.	Alternator Drivebelt.s Maintenance	4-8

4-2. ALTERNATOR (60 AMPERE) AND MOUNTING BRACKETS MAINTENANCE

THIS TASK COVERS:

a. Removal
b. Installation
c. Adjustment

INITIAL SETUP

APPLICABLE MODELS
All

MATERIALS/PARTS
Twelve lockwashers
Two locknuts
Adhesive sealant (Appendix C, Item 3)
Sealing Compound (Appendix C, Item 24)

REFERENCES (TM)
TM 9-2320-260-10
TM 9-2320-260-20P

EQUIPMENT CONDITION
- Parking brake set (TM 9-2320-260-10).
- Hood raised and secured (TM 9-2320-260-10).
- Battery ground cable disconnected (para. 4-48).
- Alternator drivebelts removed (para. 4-4).

GENERAL SAFETY INSTRUCTIONS
Support alternator prior to removal of mounting hardware.

4-2. ALTERNATOR (60 AMPERE) AND MOUNTING BRACKETS MAINTENANCE (Contd)

a. Removal

CAUTION

Never operate the alternator with the output terminal (POS) disconnected, or damage to alternator will result.

NOTE

Tag all wires for installation.

1. Remove two screws (3) and lockwashers (2) from terminal cover (1) and alternator (16). Discard lockwashers (2).
2. Pry terminal cover (1) away from waterproofing sealant and remove cover (1) from alternator (16).
3. Remove two screws (31), lockwashers (30), and wire retaining strap (29) from alternator (16). Discard lockwashers (30).
4. Disconnect lead (25) from wire (24).
5. Remove screw (28), lockwasher (27), and ground wire (26) from alternator (16). Discard lockwasher (27).

NOTE

All waterproofing sealant must be removed prior to removing wires.

6. Remove nut (4), lockwasher (5), washer (6), and positive wire (7) from stud (8). Discard lockwasher (5).
7. Remove screw (10), lockwasher (11), screw (15), lockwasher (14), washer (13), and adjusting arm (12) from alternator (16) and engine (9). Discard lockwashers (11) and (14).

WARNING

Support alternator prior to removal of mounting hardware. Failure to do so may result in injury to personnel or damage to equipment.

8. Remove locknut (17), washer (18), and screw (23) from each end of alternator (16) and mounting bracket (22). Discard locknuts (17).
9. Remove alternator (16) from mounting bracket (22).

NOTE

Perform step 10 only if mounting bracket is to be replaced.

10. Remove four screws (21), lockwashers (20), two washers (19), and mounting bracket (22) from engine (9). Discard lockwashers (20).

4-2. ALTERNATOR (60 AMPERE) AND MOUNTING BRACKETS MAINTENANCE (Contd)

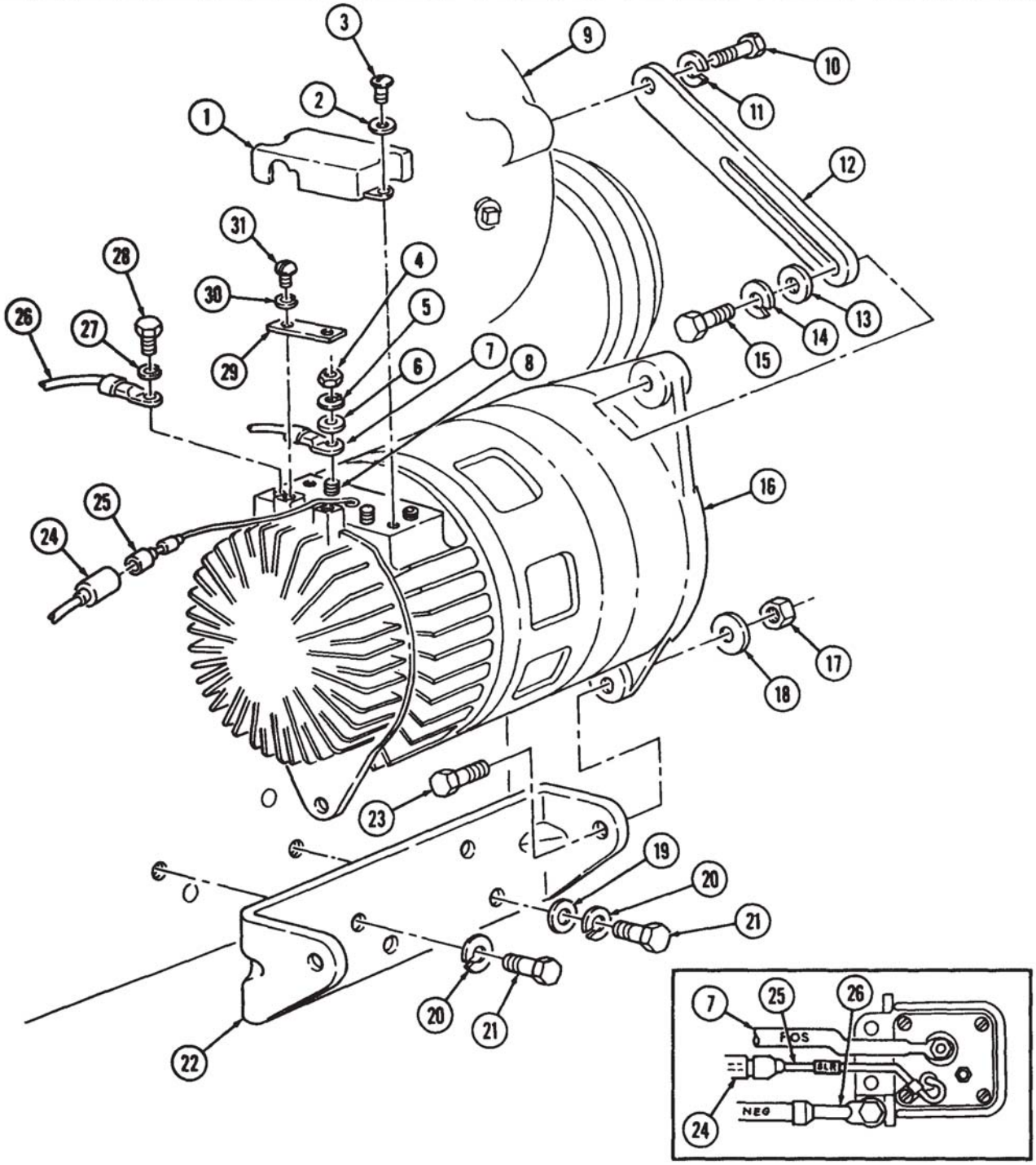

OLD MODEL CONFIGURATION

4-2. ALTERNATOR (60 AMPERE) AND MOUNTING BRACKETS MAINTENANCE (Contd)

b. Installation

NOTE

Perform steps 1 and 2 if mounting brackets were removed.

1. Install mounting bracket (18) on engine (5) with two washers (17), four new lockwashers (16), and screws (15).
2. Install adjusting arm (8) on engine (5) and alternator (12) with washer (9), new lockwasher (10), screw (11), new lockwasher (6), and screw (7). Finger tighten only.
3. Position alternator (12) on mounting bracket (18) and install with screw (19), washer (14), and new locknut (13) on each side of mounting bracket (18) and alternator (12). Finger tighten only.

NOTE

Ensure terminals are clean before connections are made.

4. Install positive wire (26) on stud (22) with washer (27), new lockwasher (28), and nut (29). Tighten nut (29) 45-55 lb-in. (5-6 N•m).
5. Install ground wire (23) on alternator (12) with new lockwasher (24) and screw (25). Tighten screw (25) 82-102 lb-in. (9-12 N•m).
6. Connect lead (21) to wire (20).
7. Install retaining strap (30) on alternator (12) with two new lockwashers (31) and screws (32). Tighten screws (32) 30-35 lb-in. (3-4 N•m).
8. Install alternator drivebelts (para. 4-4) and connect battery ground cable (para. 4-48).
9. Start engine (TM 9-2320-260-10) and check alternator operation. If adjustment is necessary, refer to task c.

NOTE

If no adjustment is necessary, perform steps 10 and 11.

10. Completely seal wire (26), lead (21), and inside of terminal cover (1) with adhesive sealant.
11. Install terminal cover (1) on alternator (12) with two new lockwashers (2) and screws (3).

c. Adjustment

1. Start engine (TM 9-2320-260-10) and set engine idle speed at 1200 rpm (TM 9-2320-260-10).
2. Turn vehicle headlights on (TM 9-2320-260-10) to place a load on alternator (12).
3. Remove two screws (3), lockwashers (2), and terminal cover (1) from alternator (12). Discard lockwashers (2).

NOTE

Remove all waterproofing sealant from wires prior to testing.

4. Using multimeter, check alternator output voltage. Connect black lead to ground wire (23) and touch red lead to positive wire (26). Alternator output voltage reading should be 28.0 ± 0.2 VDC. If adjustment is required, continue to step 5.
5. Remove pipe plug (4) from alternator (12).
6. Turn adjusting screw clockwise to decrease voltage, or counterclockwise to increase voltage.
7. Apply sealing compound to threads of pipe plug (4) and install on alternator (12). Tighten pipe plug (4) 30-40 lb-in. (3-5 N•m).
8. Completely seal wires and inside of terminal cover (1) with adhesive sealant.
9. Install terminal cover (1) on alternator (12) with two new lockwashers (2) and screws (3).

4-2. ALTERNATOR (60 AMPERE) AND MOUNTING BRACKETS MAINTENANCE (Contd)

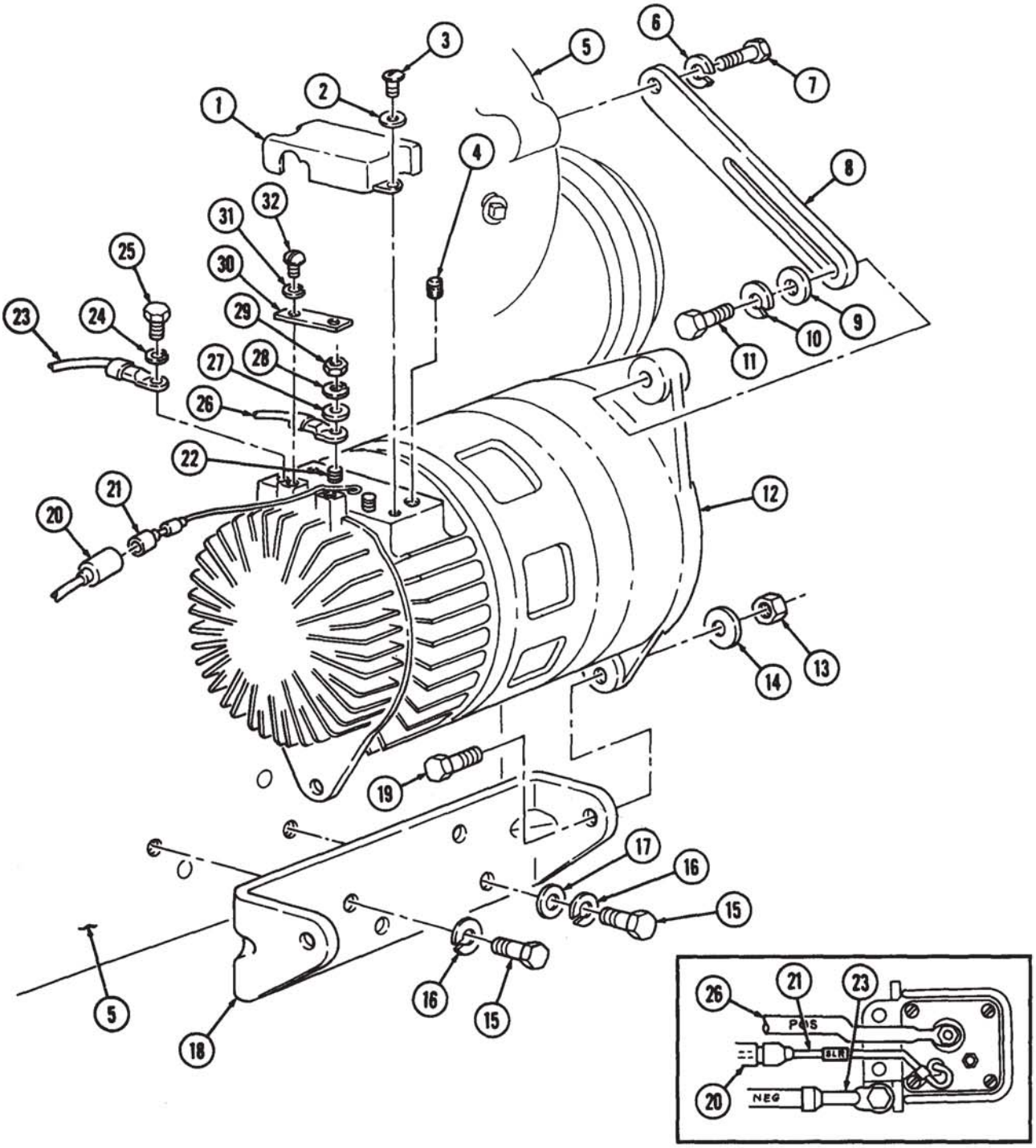

OLD MODEL CONFIGURATION

4-3. ALTERNATOR PULLEY REPLACEMENT

THIS TASK COVERS:

a. Removal

b. Installation

INITIAL SETUP

APPLICABLE MODELS

All

MATERIALS/PARTS

Locknut
Woodruff key

REFERENCES (TM)

TM 9-2320-260-20P

EQUIPMENT CONDITION

- Alternator removed (para. 4-2).
- Parking brake set (TM 9-2320-260-10).
- Hood raised and secured (TM 9-2320-260-10).

a. Removal

1. Clamp alternator pulley (2) in a vise (3) with soft-jaw protectors.
2. Remove locknut (5) and washer (4). Discard locknut (5).
3. Remove alternator (1) from vise (3).
4. Using a puller, remove alternator pulley (2) and woodruff key (6) from alternator shaft (7). Discard woodruff key (6).

b. Installation

1. Insert new woodruff key (6) into alternator shaft (7).
2. Aline pulley keyway (8) with woodruff key (6) and tap pulley (2) onto shaft (7).
3. Install washer (4) and new locknut (5). Finger tighten locknut (5).
4. Clamp pulley (2) in soft-jawed vise (3).
5. Tighten locknut (5) 90-95 lb-ft (122-129 N•m).
6. Remove alternator (1) from vise (3).

4-3. ALTERNATOR PULLEY REPLACEMENT (Contd)

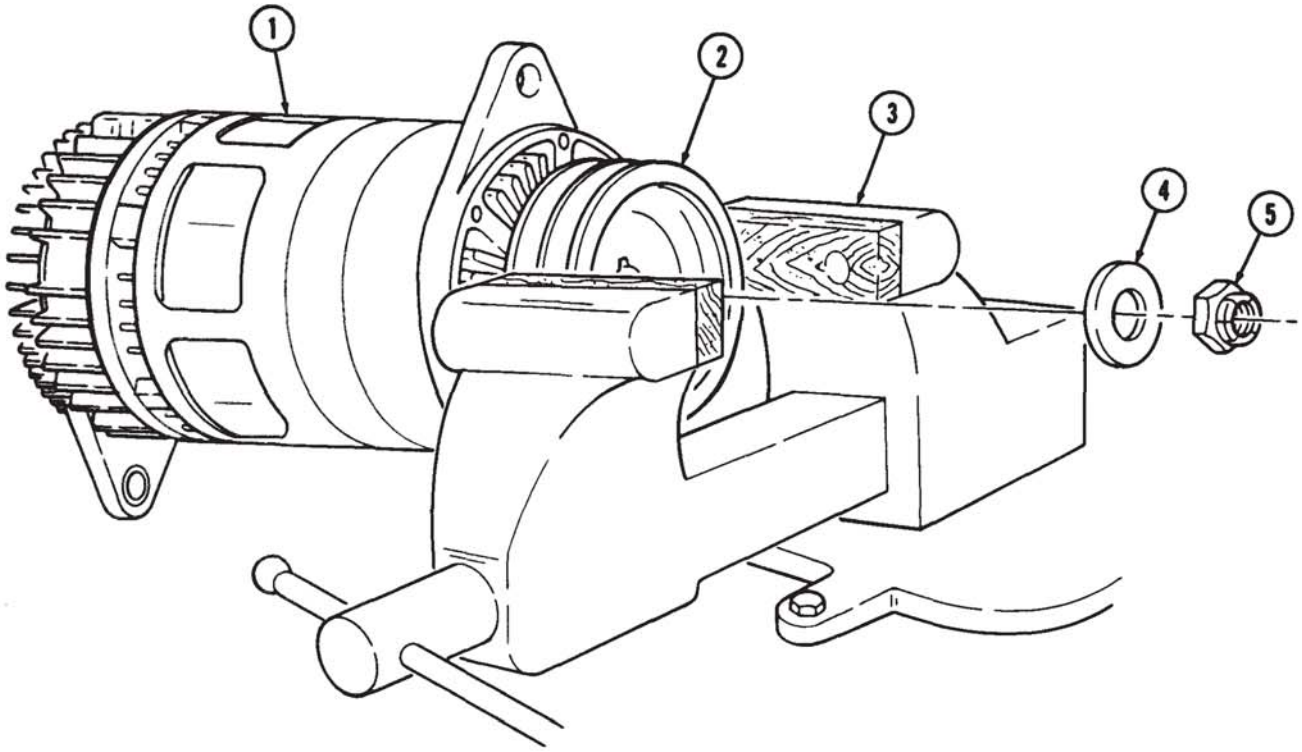

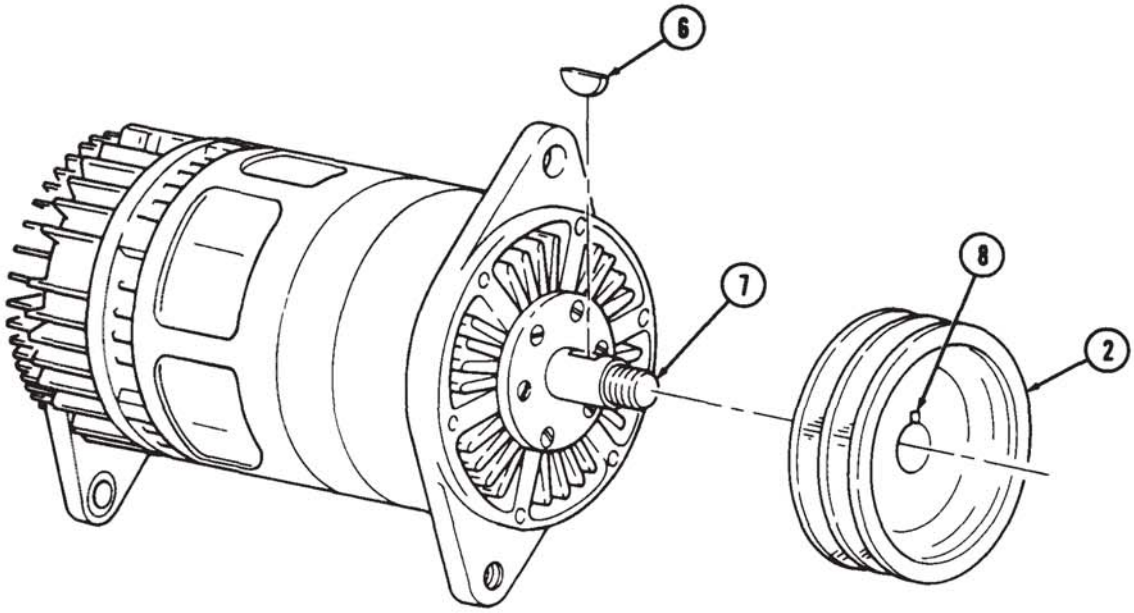

FOLLOW-ON TASK: Install alternator (para. 4-2).

4-4. ALTERNATOR DRIVEBELTS MAINTENANCE

THIS TASK COVERS:

a. Removal
b. Inspection
c. Installation
d. Adjustment

INITIAL SETUP

APPLICABLE MODELS

All

REFERENCES (TM)

TM 9-2320-260-10
TM 9-2320-260-20P

EQUIPMENT CONDITION

- Parking brake set (TM 9-2320-260-10).
- Hood raised and secured (TM 9-2320-260-10).
- Fan blade removed (para. 3-53).

a. Removal

1. Loosen two screws (2) on alternator adjusting link (1).
2. Loosen two nuts (15) and screws (12) on each side of alternator mounting bracket (13).
3. Rotate alternator (14) toward engine (4) to loosen alternator drivebelts (9).
4. Loosen three screws (3) on fan pulley bracket (5).
5. Loosen jamnut (10) and fan pulley adjusting screw (11).
6. Remove fan drivebelts (8) from fan pulley (7) and accessory drive pulley (6).
7. Remove alternator drivebelts (9) from alternator pulley (16) and fan pulley (7).

b. Inspection

Inspect alternator drivebelts (9), for glazing, splits, cracks, and breaks. Replace both alternator drivebelts (9) if either is glazed, split, cracked, or broken.

c. Installation

NOTE

Alternator drivebelts are a matched set.

1. Install alternator drivebelts (9) on alternator pulley (16) and third and fourth grooves of fan pulley (7).
2. Install fan drivebelts (8) on first and second groove of fan pulley (7) and first and second groove of accessory drive pulley (6).
3. Tighten fan pulley adjusting screw (11) until fan drivebelts (8) are tight. Tighten jamnut (10).
4. Tighten three screws (3) on fan pulley bracket (5).

NOTE

Assistant will help with steps 5, 6, and 7.

5. Rotate alternator (14) away from engine (4) until alternator drivebelts (9) are tight.
6. Tighten two screws (2) on alternator adjusting link (1) 25-31 lb-ft (34-42 N•m).
7. Tighten two nuts (15) and screws (12) on each side of alternator mounting bracket (13) 50-55 lb-ft (68-75 N•m).
8. Check adjustment of alternator drivebelts (9) (task d.) and fan drivebelts (8) (para. 3-52).

4-4. ALTERNATOR DRIVEBELTS MAINTENANCE (Contd)

d. Adjustment

1. Position belt tension gage, ST-1274, on center of alternator drivebelts (9) and check tension.
2. Drivebelt tension should be 120-140 lb-ft (163-190 N•m). If tension is not within limits, adjust alternator drivebelts (9):
   a. Loosen screw (2) on alternator adjusting link (1).
   b. Loosen two nuts (15) and screws (12) on alternator mounting bracket (13).

NOTE

Assistant will help with steps c, d, and e.

   c. Rotate alternator (14) until drivebelts (9) have proper tension.
   d. Tighten screw (2) on alternator adjusting link (1) 25-31 lb-ft (34-42 N•m).
   e. Tighten two nuts (15) and screws (12) on each side of alternator mounting bracket (13) 50-55 lb-ft (68-75 N•m).

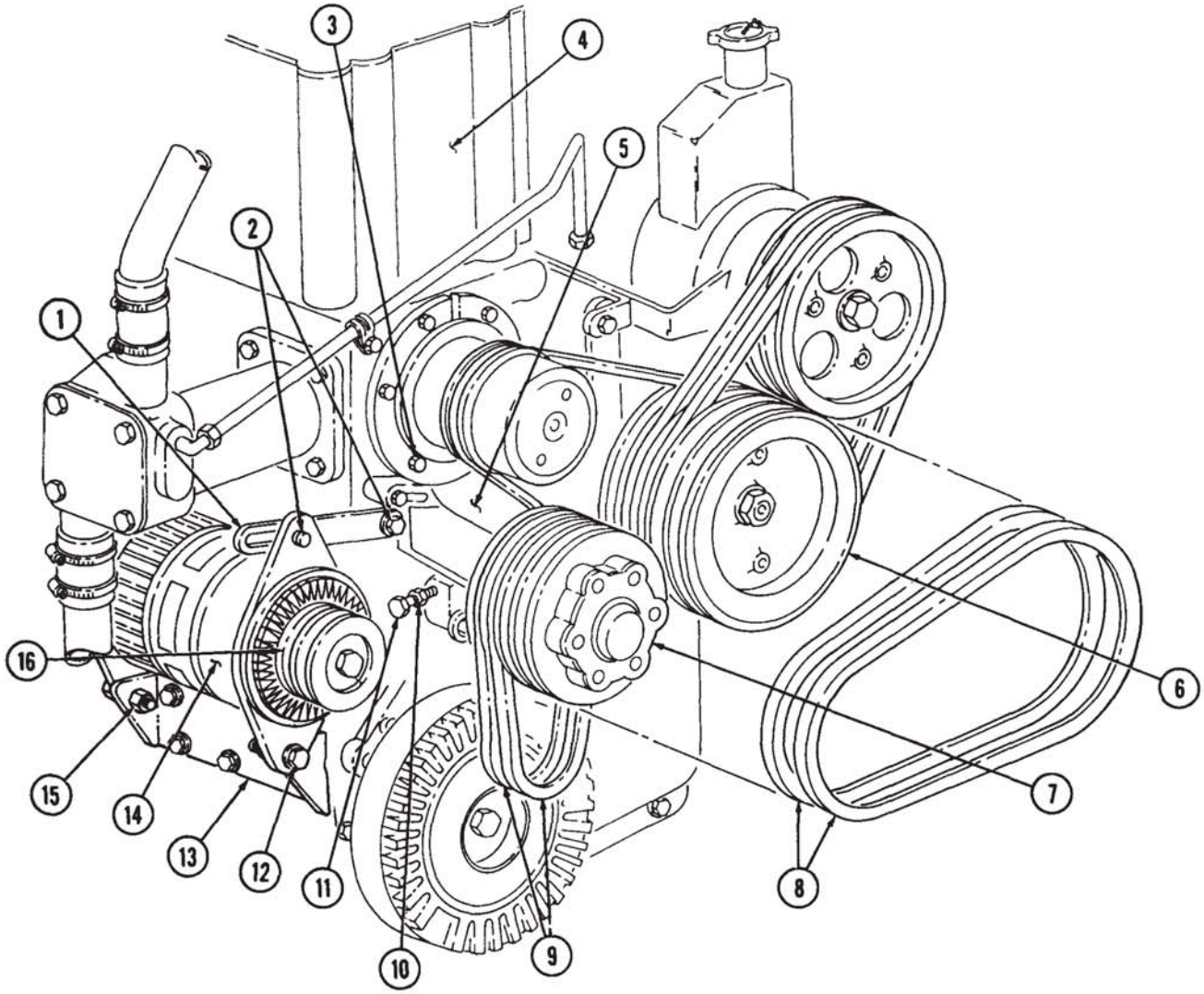

FOLLOW-ON TASK: Install fan blade (para. 3-53).

Section II. STARTING SYSTEM MAINTENANCE

4-5. STARTER MOTOR REPLACEMENT

THIS TASK COVERS:

a. Removal

b. Installation

INITIAL SETUP

APPLICABLE MODELS
All

MATERIALS/PARTS
Two gaskets
Five lockwashers

REFERENCES (TM)
TM 9-2320-260-10
TM 9-2320-260-20P

EQUIPMENT CONDITION
- Parking brake set (TM 9-2320-260-10).
- Hood raised and secured (TM 9-2320-260-10).
- Battery ground cable disconnected (para. 4-48).

GENERAL SAFETY INSTRUCTIONS
Support starter motor prior to removal of mounting hardware.

a. Removal

NOTE

Tag all wires for installation.

1. Remove screw (4), clip (3), and wire (2) from starter solenoid (5).
2. Remove nut (12), lockwasher (13), and wires (1) and (11) from solenoid (5). Discard lockwasher (13).
3. Remove nut (8), lockwasher (9), wire (10), and ground strap (7) from starter (6). Discard lockwasher (9).

WARNING

Support starter motor prior to removal of mounting hardware. Failure to do so may result in injury to personnel or damage to equipment.

NOTE

Assistant will help with steps 4 and 5.

4. Remove screw (14), lockwasher (15), two screws (21), and lockwashers (20). Discard lockwashers (15) and (20).
5. Remove starter motor (6), gasket (19), spacer (18), and gasket (17) from engine (16). Discard gaskets (17) and (19). Clean gasket remains from mating surfaces.

4-5. STARTER MOTOR REPLACEMENT (Contd)

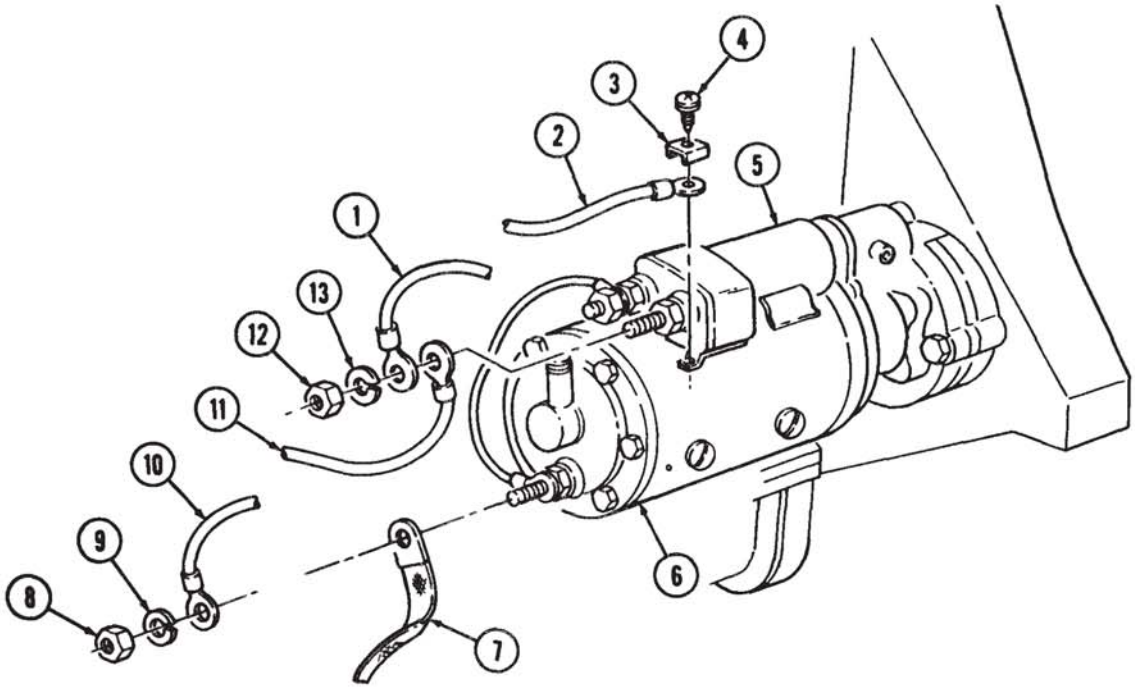

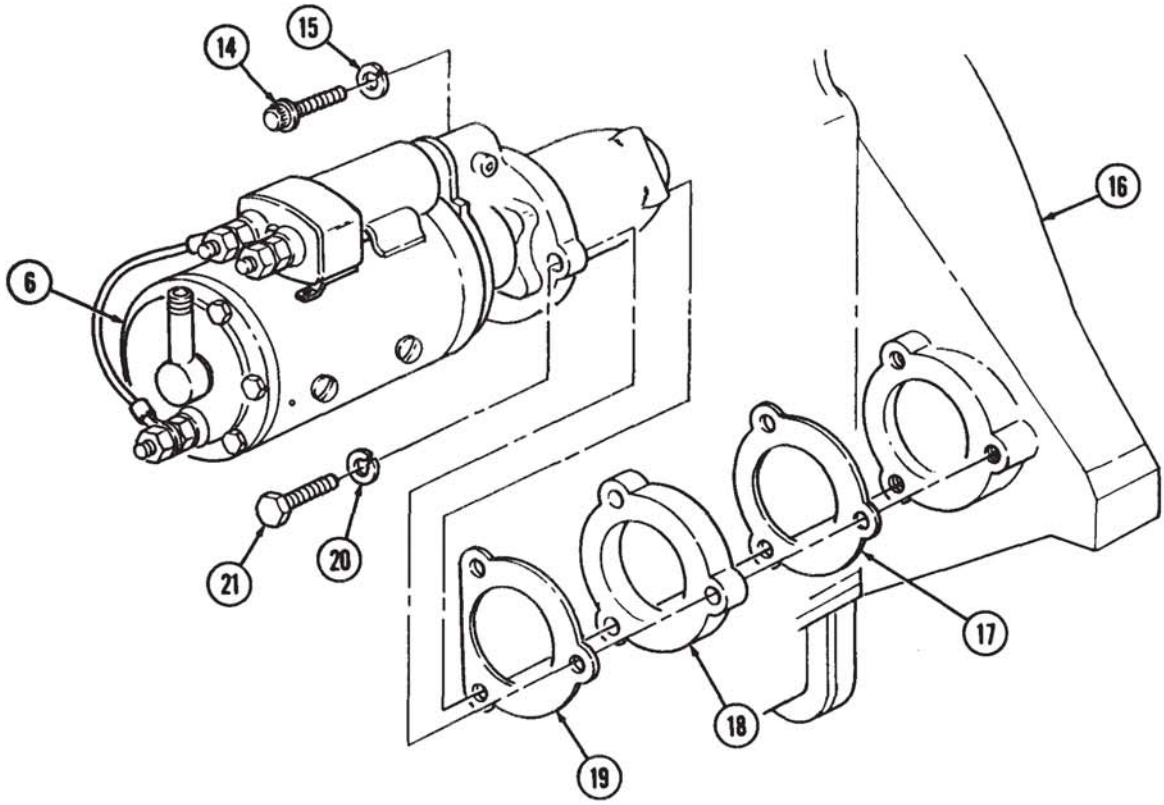

4-5. STARTER MOTOR REPLACEMENT (Contd)

b. Installation

1. Position new gasket (4), spacer (5), and new gasket (6) on starter motor (9). Ensure flat side of new gasket (6) faces starter motor (9).

NOTE

Assistant will help with step 2.

2. Position starter motor (9) on engine (3) and install with new lockwasher (2), screw (1), two new lockwashers (7), and screws (8). Tighten screws (8) and (1) 100-110 lb-ft (136-149 N•m).
3. Install ground strap (14) and wire (17) on starter (9) with new lockwasher (16) and nut (15).
4. Install wires (18) and (21) on starter solenoid (13) with new lockwasher (20) and nut (19).
5. Install wire (10) on starter solenoid (13) with clip (11) and screw (12).

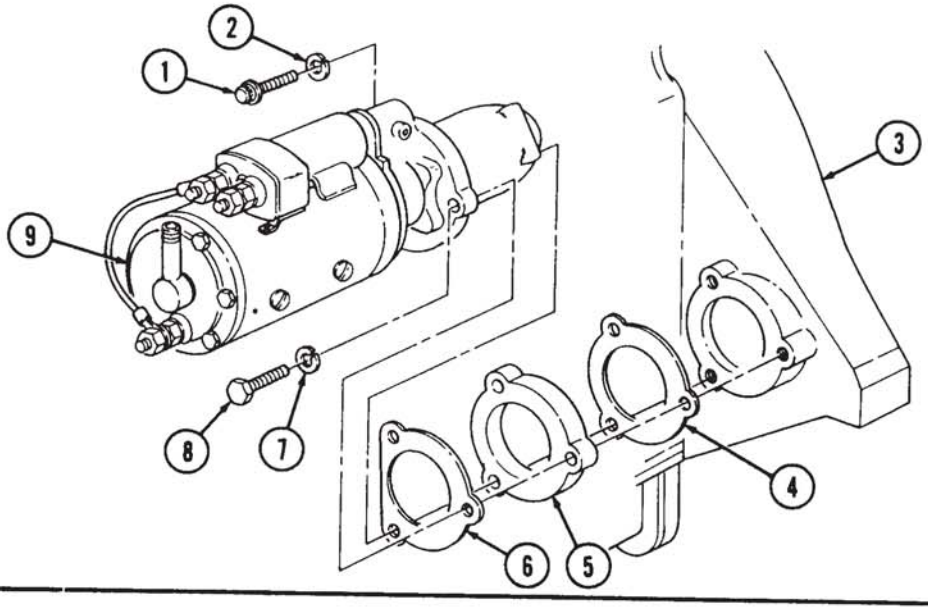

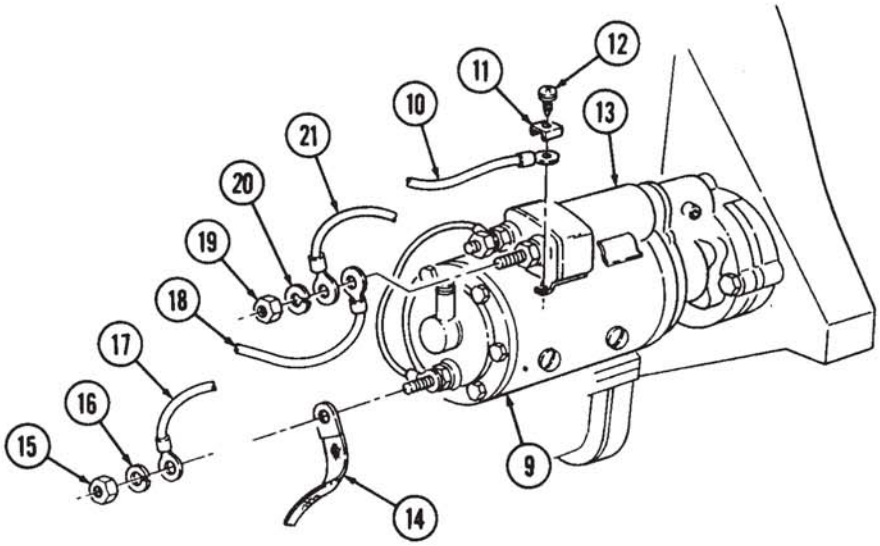

FOLLOW-ON TASK: Connect battery ground cable (para. 4-48).

Section III. INSTRUMENTS, SENDING UNITS, SWITCHES, AND HORN MAINTENANCE

4-6. INSTRUMENTS, SENDING UNITS, SWITCHES, AND HORN MAINTENANCE INDEX

PARA. NO.	TITLE	PAGE NO.
4-7.	Instrument Cluster Maintenance	4-14
4-8.	Instrument Panel Replacement	4-18
4-9.	Air Gage and Oil Pressure Gage Replacement	4-22
4-10.	Electrical Gages Replacement	4-24
4-11.	Speedometer and Tachometer Replacement	4-26
4-12.	Tachometer Flexible Driveshaft and Core Maintenance	4-28
4-13.	Speedometer Flexible Driveshaft and Core Maintenance	4-32
4-14.	Speedometer Drive Adapter Replacement	4-36
4-15.	Headlight High Beam Indicator and Lamp Replacement	4-37
4-16.	Light Switch Replacement	4-38
4-17.	Battery, Ignition, and Accessory Switch Replacement	4-39
4-18.	Floodlight Switch and Fuel Selector Switch Replacement	4-40
4-19.	Oil Pressure Lockout Switch Replacement	4-41
4-20.	Circuit Breaker Replacement	4-42
4-21.	Microbrake Lock Switch Replacement	4-43
4-22.	Auxiliary Power Receptacle and Socket Replacement	4-44
4-23.	Low Air Pressure Buzzer Replacement	4-46
4-24.	Fuel Level Sending Unit Replacement	4-47
4-25.	Stoplight Pressure Switch Replacement	4-48
4-26.	Low Air Pressure Indicator Switch Replacement	4-50
4-27.	Brake Lock Switch Replacement	4-52
4-28.	Water Temperature Sending Unit Replacement	4-54
4-29.	Horn Switch Replacement	4-55
4-30.	Horn, Solenoid, and Bracket Replacement	4-56
4-31.	Horn Contact Brush Replacement	4-58
4-32.	Turn Signal Flasher Replacement	4-60
4-33.	Turn Signal Control and Indicator Lamp Replacement	4-61
4-34.	Warning Signal Light Flasher Replacement	4-62
4-35.	Headlight High Beam Selector Switch Replacement	4-63
4-36.	Protective Control Box and Bracket Replacement	4-64

4-7. INSTRUMENT CLUSTER MAINTENANCE

THIS TASK COVERS:

a. Removal
b. Disassembly
c. Assembly
d. Installation

INITIAL SETUP

APPLICABLE MODELS
All

MATERIALS/PARTS
Antiseize tape (Appendix C, Item 30)

REFERENCES (TM)
TM 9-2320-260-10
TM 9-2320-260-20P

EQUIPMENT CONDITION
- Parking brake set (TM 9-2320-260-10).
- Battery ground cable disconnected (para. 4-48).
- Air reservoirs drained (TM 9-2320-260-10).

GENERAL SAFETY INSTRUCTIONS
Do not disconnect air lines before draining air reservoirs.

a. Removal

1. Disconnect oil pressure tube (20) and elbow (19) from oil pressure gage (21).
2. Loosen four lockstuds (3) and separate instrument cluster (2) from instrument panel (1).

NOTE

- Tag each wire, air tube, and driveshaft for installation.
- Gages may vary in position on the cluster. Remove and install in same position.

3. Disconnect tachometer driveshaft (7) from tachometer (6).
4. Disconnect speedometer driveshaft (11) from speedometer (9).
5. Disconnect two wire plugs (5) from engine temperature gage (4).
6. Disconnect two wire plugs (12) from fuel gage (10).
7. Disconnect wire connectors (8) and (13) from panel lights (26) and (18).
8. Disconnect wire connector (14) from high beam indicator (15).

WARNING

Do not disconnect air lines before draining air reservoir. Small parts under pressure may shoot out with high velocity, causing injury to personnel.

9. Disconnect air line (22) from air pressure gage (23).
10. Disconnect wire connector (24) from battery-generator gage (25).
11. Disconnect harness lead (17) from wire (16).
12. Remove instrument cluster (2) from instrument panel (1).

4-7. INSTRUMENT CLUSTER MAINTENANCE (Contd)

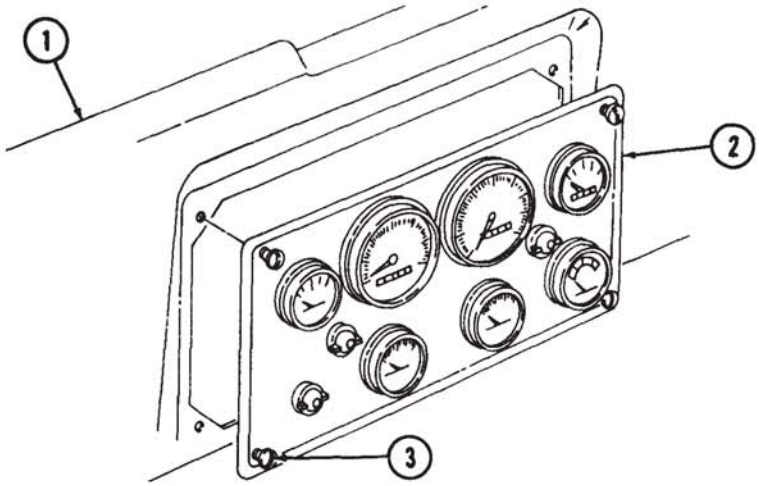

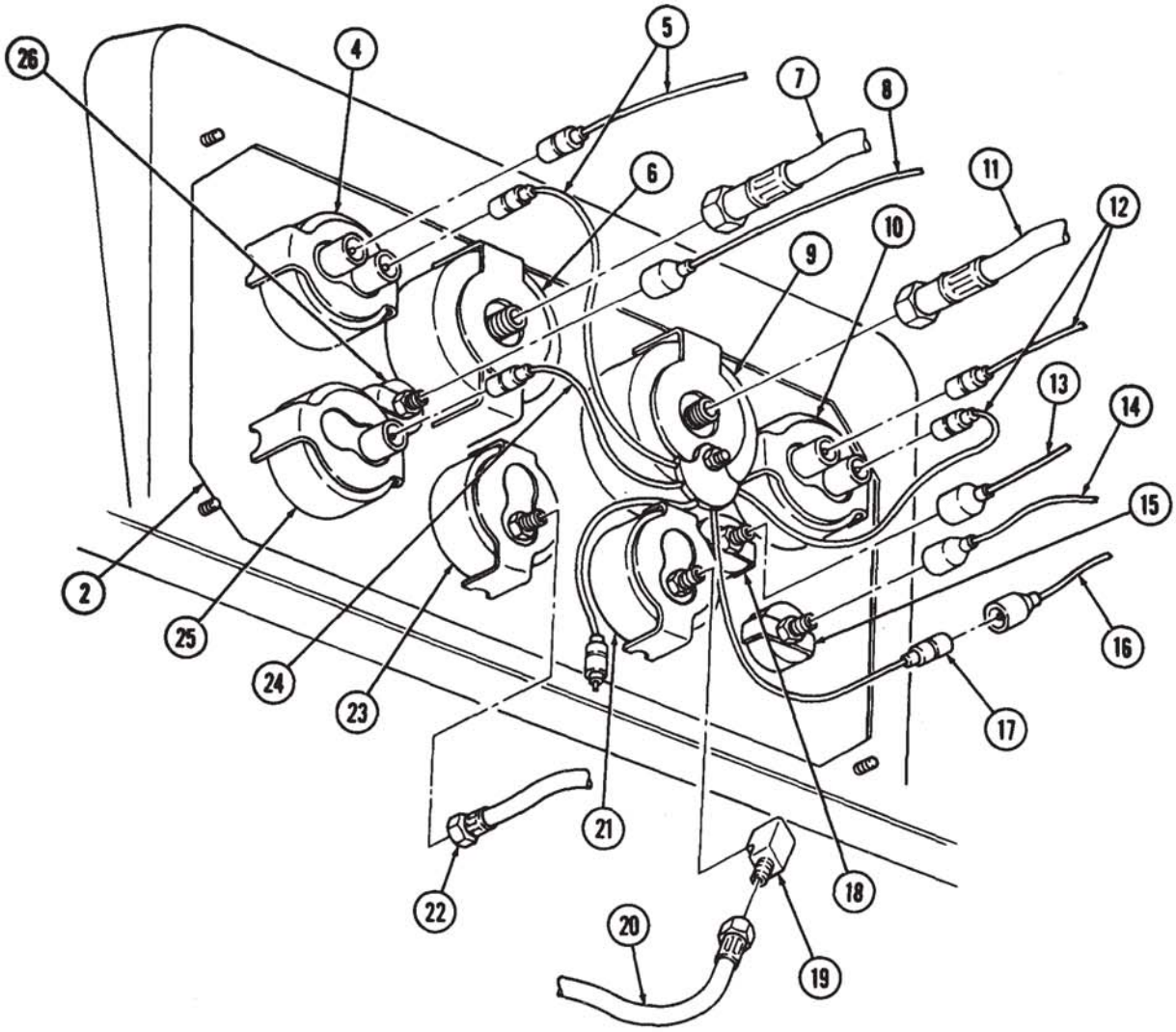

4-7. INSTRUMENT CLUSTER MAINTENANCE (Contd)

b. Disassembly

1. Remove two indicator panel lights (15) and high beam indicator (12) (para. 4-13).
2. Remove tachometer (3) and speedometer (6) (para. 4-9).
3. Remove engine temperature gage (1), battery-generator gage (22), and fuel gage (7) (para. 4-8).
4. Remove air pressure gage (20) and oil pressure gage (18) (para. 4-7).

c. Assembly

1. Install air pressure gage (20) and oil pressure gage (18) (para. 4-7).
2. Install fuel level gage (7), battery-generator gage (22), and engine temperature gage (1) (para. 4-8).
3. Install speedometer (6) and tachometer (3) (para. 4-9).
4. Install high beam indicator (12) and two indicator panel lights (15) (para. 4-13).

d. Installation

1. Connect harness lead (14) to wire (13).
2. Connect wire connector (21) to battery-generator gage (22).
3. Apply antiseize tape to threads of air pressure gage (20) and connect air line (19).
4. Connect wire connector (11) to high beam indicator (12).
5. Connect wire connectors (5) and (10) to panel lights (15).
6. Connect two wire plugs (9) to fuel gage (7).
7. Connect two wire plugs (2) to engine temperature gage (1).
8. Connect speedometer driveshaft (8) to speedometer (6).
9. Connect tachometer driveshaft (4) to tachometer (3).
10. Install instrument cluster (23) on instrument panel (24). Tighten four lockstuds (25).
11. Apply antiseize tape to male threads of elbow (16) and install on oil pressure gage (18).
12. Install oil pressure tube (17) on elbow (16).

4-7. INSTRUMENT CLUSTER MAINTENANCE (Contd)

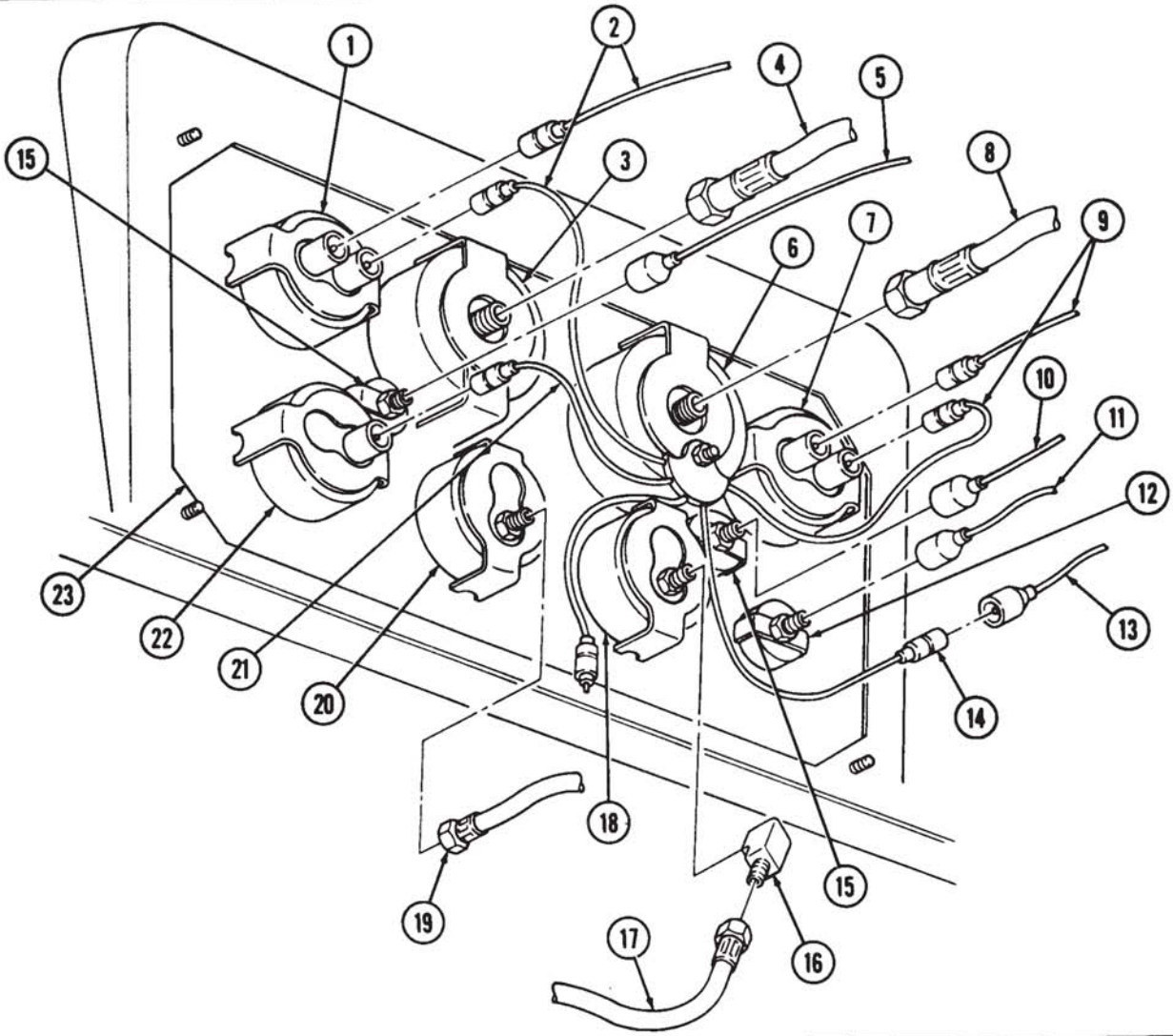

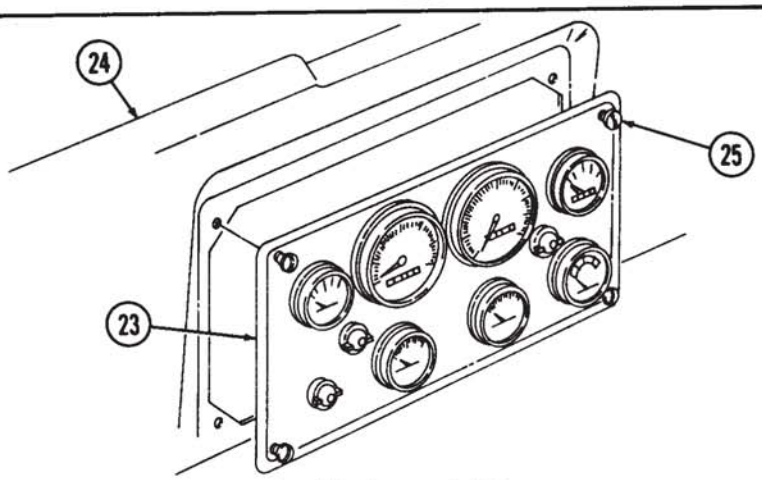

FOLLOW-ON TASKS:
- Connect battery ground cable (para. 4-48).
- Start engine (TM 9-2320-260-10) and check for air leaks and proper gage operation.

4-8. INSTRUMENT PANEL REPLACEMENT

THIS TASK COVERS:

a. Removal

b. Installation

INITIAL SETUP

APPLICABLE MODELS

All

MATERIALS/PARTS

Two locknuts

REFERENCES (TM)

TM 9-2320-260-10
TM 9-2320-260-20P

EQUIPMENT CONDITION

- Parking brake set (TM 9-2320-260-10).
- Battery ground cable disconnected (para. 4-48).
- Instrument cluster removed (para. 4-7).
- Accessory switch removed (para. 4-17).
- Battery switch removed (para. 4-17).
- Ignition switch removed (para. 4-17).
- Fuel tank selector switch removed (para. 4-18).
- Floodlight switch removed (para. 4-18).
- Primer pressure gage removed (para. 3-29).
- Brake lock switch removed (M816) (para. 4-21).
- Light switch removed (para. 4-16).
- Auxiliary power receptacle removed (Para. 4-22).
- Steering column removed (Para. 9-15).
- Cold start indicator and lamp removed (para. 3-32).
- Fording valve control handle removed (para. 14-27).
- Primer pump control handle removed (para. 3-31).
- Engine stop and throttle control cable removed (para. 3-38).
- Air cleaner indicator removed (para. 3-18).
- Warning signal light flasher removed (para. 4-34).
- Instrument panel circuit breaker removed (para. 4-20).
- Windshield wiper pump removed (para. 11-39).
- Windshield wiper tubes removed (para. 11-40).
- Glove box removed (para. 11-33).
- Heater control box removed (para. 14-5).
- Personnel heater control cables removed (para. 14-12).

4-8. INSTRUMENT PANEL REPLACEMENT (Contd)

a. Removal

1. Remove two locknuts (10), screws (5), and washers (6) from instrument panel (4) and bracket (9). Discard locknuts (10).
2. Remove seven screws (3) from instrument panel (4).
3. Remove four screws (2) from instrument panel (4).
4. Remove two screw-assembled washers (1) from instrument panel (4).

NOTE

Assistant will help with step 5.

5. Remove instrument panel (4) from cab (11) and brackets (9) and (12).

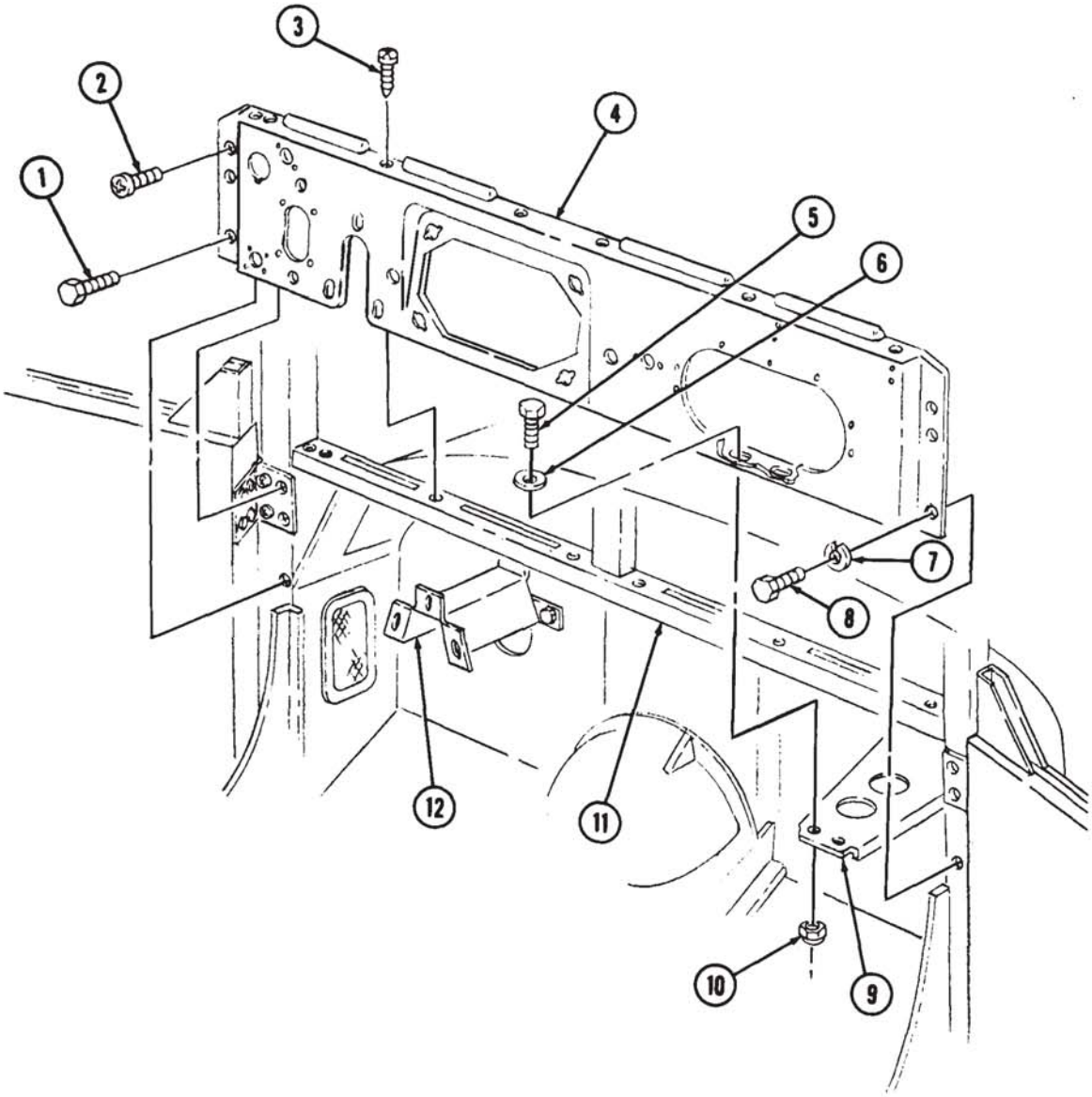

4-8. INSTRUMENT PANEL REPLACEMENT (Contd)

b. Installation

NOTE

Assistant will help with step 1.

1. Position instrument panel (4) on cab (11) and brackets (9) and (12).
2. Install two screw-assembled washers (1) on instrument panel (4).
3. Install four screws (2) on instrument panel (4).
4. Install seven screws (3) on instrument panel (4).
5. Install two washers (6), screws (5), and new locknuts (10) on instrument panel (4) and bracket (9).

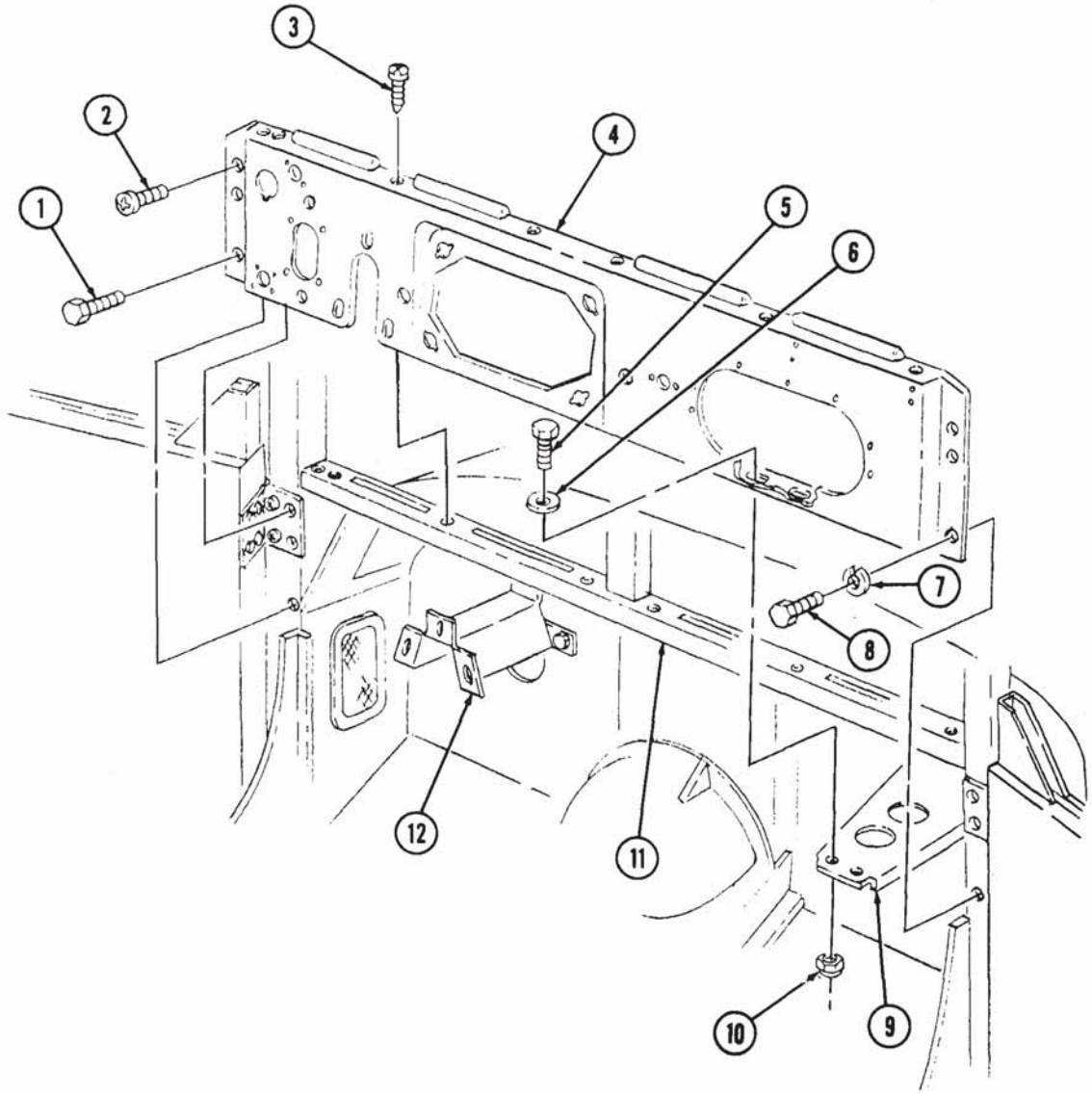

4-8. INSTRUMENT PANEL REPLACEMENT (Contd)

FOLLOW-ON TASKS:
- Install warning signal light flasher (para. 4-34).
- Install instrument cluster (para. 4-7).
- Install accessory switch (para. 4-17).
- Install battery switch (para. 4-17).
- Install ignition switch (para. 4-17).
- Install fuel tank selector switch (para. 4-18).
- Install floodlight switch (para. 4-18).
- Install primer pressure gage (para. 3-29).
- Install brake lock switch (M816) (para. 4-21).
- Install light switch (para. 4-16).
- Install auxiliary power receptacle (para. 4-22).
- Install steering column (para. 9-15).
- Install cold start indicator and lamp (para. 3-32).
- Install fording valve control handle (para. 14-27).
- Install primer pump control handle (para. 3-31).
- Install engine stop and throttle control cables (para. 3-38).
- Install battery ground cable (para. 4-48).
- Install instrument panel circuit breaker (para. 4-20).
- Install personnel heater control cables (para. 14-12).
- Install heater control box (para. 14-5).
- Install glove box (para. 11-33).
- Install windshield wiper tubes (para. 11-40).
- Install windshield wiper pump (para. 11-39).
- Install air cleaner indicator (para. 3-18).

4-9. AIR GAGE AND OIL PRESSURE GAGE REPLACEMENT

THIS TASK COVERS:

a. Removal

b. Installation

INITIAL SETUP

APPLICABLE MODELS

All

MATERIALS/PARTS

Two lockwashers
Antiseize tape (Appendix C, Item 30)

REFERENCES (TM)

TM 9-2320-260-10
TM 9-2320-260-20P

EQUIPMENT CONDITION

- Parking brake set (TM 9-2320-260-10).
- Air reservoirs drained (TM 9-2320-260-10).
- Battery ground cable disconnected (para. 4-48).

GENERAL SAFETY INSTRUCTIONS

Do not disconnect air lines before draining air reservoirs.

NOTE

Air gage and oil pressure gage are replaced the same way. This procedure covers the air gage only.

a. Removal

WARNING

Do not disconnect air lines before draining air reservoirs. Small parts under pressure may shoot out with high velocity, causing injury to personnel.

1. Disconnect oil pressure tube (2) from oil pressure gage elbow (1).
2. Loosen four lockstuds (10) and separate instrument cluster (9) from instrument panel (7).
3. Disconnect air line (3) from air gage (8).
4. Remove two nuts (4), lockwashers (5), and bracket (6) from air gage (8). Discard lockwashers (5).
5. Remove air gage (8) from instrument cluster (9).

b. Installation

1. Position air gage (8) on instrument cluster (9).
2. Install bracket (6) on air gage (8) with two new lockwashers (5) and nuts (4).
3. Apply antiseize tape to male threads of air gage (8) and connect air line (3).
4. Install instrument cluster (9) on instrument panel (7). Tighten four lockstuds (10).
5. Apply antiseize tape to threads of elbow (1) and connect oil pressure tube (2) on oil pressure gage elbow (1).

4-9. AIR GAGE AND OIL PRESSURE GAGE REPLACEMENT (Contd)

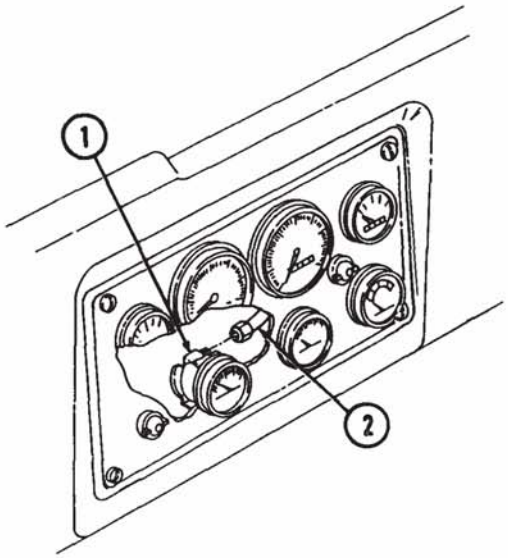

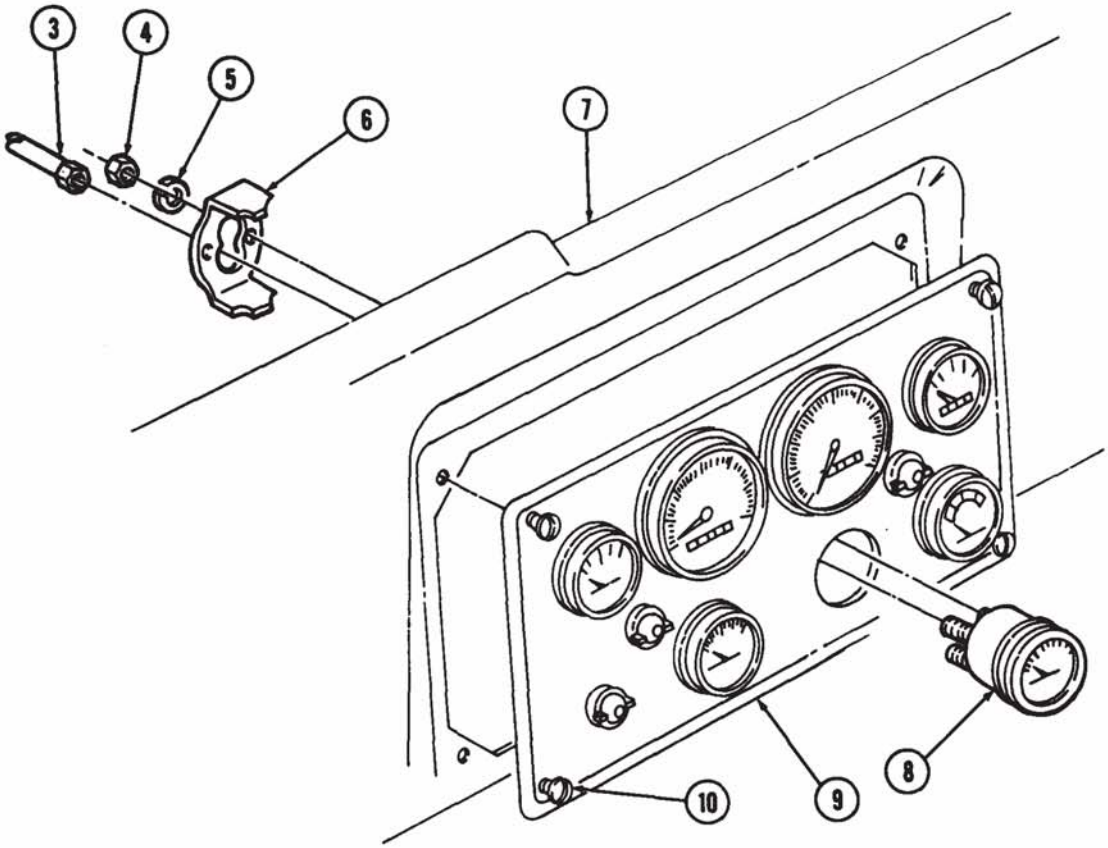

FOLLOW-ON TASKS: • Connect battery ground cable (para. 4-48).
• Start engine (TM 9-2320-260-10) and check for air leaks.

4-10. ELECTRICAL GAGES REPLACEMENT

THIS TASK COVERS:

a. Removal

b. Installation

INITIAL SETUP

APPLICABLE MODELS

All

MATERIALS/PARTS

Two lockwashers
Antiseize tape (Appendix C, Item 30)

REFERENCES (TM)

TM 9-2320-260-10
TM 9-2320-260-20P

EQUIPMENT CONDITION

- Parking brake set (TM 9-2320-260-10).
- Disconnect battery ground cable (para. 4-48).

a. Removal

NOTE

Engine temperature, battery-generator, and fuel gages are replaced the same way. The number of electrical leads and gage locations may differ. This procedure covers the engine temperature gage only.

1. Disconnect oil pressure tube (2) from oil pressure gage elbow (1).
2. Loosen four lockstuds (9) and separate instrument cluster (10) from instrument panel (7).

NOTE

Tag all wires for installation.

3. Disconnect two wires (3) from engine temperature gage (8).
4. Remove two nuts (4), lockwashers (5), and bracket (6) from temperature gage (8). Discard lockwashers (5).
5. Remove temperature gage (8) from instrument cluster (10).

b. Installation

1. Position engine temperature gage (8) on instrument cluster (10).
2. Install bracket (6) on temperature gage (8) with two new lockwashers (5) and nuts (4).
3. Connect two wires (3) to engine temperature gage (8).
4. Install instrument cluster (10) on instrument panel (7) with four lockstuds (9).
5. Apply antiseize tape to male threads of elbow (1) and connect oil pressure tube (2) to oil pressure gage elbow (1).

4-10. ELECTRICAL GAGES REPLACEMENT (Contd)

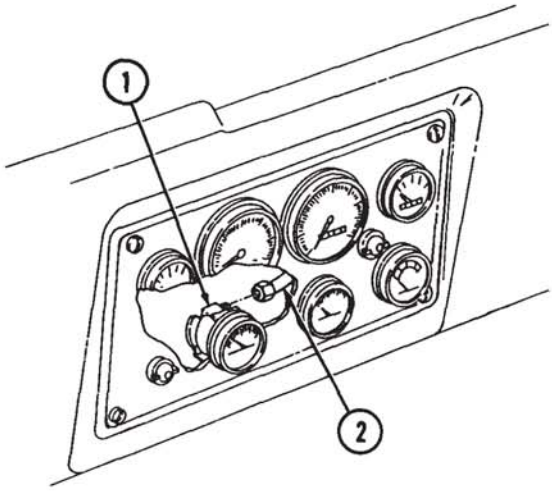

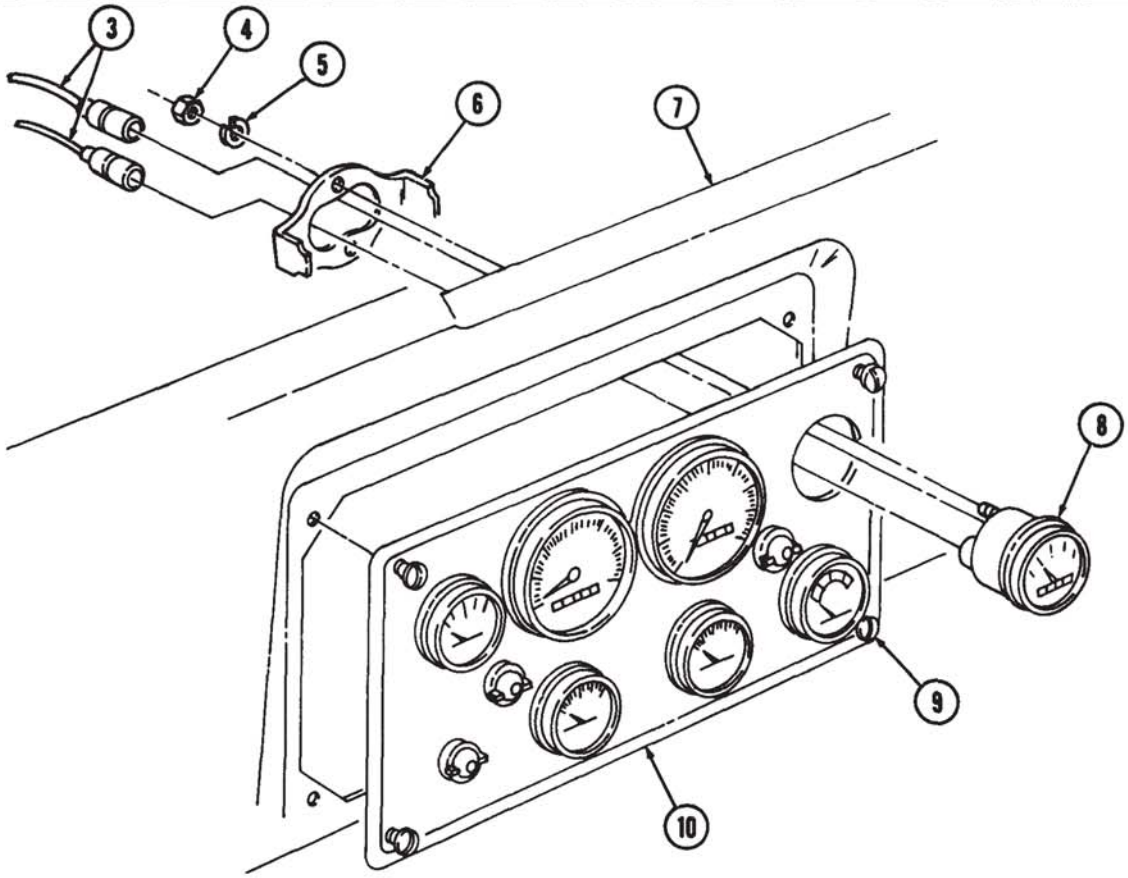

FOLLOW-ON TASKS: • Connect battery ground cable (para. 4-48).
• Start engine (TM 9-2320-260-10) and check gage operation.

4-11. SPEEDOMETER AND TACHOMETER REPLACEMENT

THIS TASK COVERS:

a. Removal

b. Installation

INITIAL SETUP

APPLICABLE MODELS

All (except M818)

MATERIALS/PARTS

Two lockwashers
Antiseize tape (Appendix C, Item 30)

REFERENCES (TM)

TM 9-2320-260-10
TM 9-2320-260-20P

EQUIPMENT CONDITION

- Parking brake set (TM 9-2320-260-10).
- Battery ground cable disconnected (para. 4-48).

NOTE

Speedometer and tachometer are replaced the same way with the exception of the instrument cluster cable and extension stud which are on the speedometer only. This procedure covers the speedometer only.

a. Removal

1. Disconnect oil pressure tube (2) from oil pressure gage elbow (1).
2. Loosen four lockstuds (10) and separate instrument cluster (9) from instrument panel (7).
3. Disconnect speedometer driveshaft (3) from speedometer (8).
4. Remove nut (15), washer (14), cluster harness (13), extension stud (12), lockwasher (11), nut (4), lockwasher (5), and mounting bracket (6) from speedometer (8). Discard lockwashers (5) and (11).
5. Remove speedometer (8) from instrument cluster (9).

b. Installation

1. Position speedometer (8) on instrument cluster (9).
2. Position mounting bracket (6) on speedometer (8) and install with two new lockwashers (5) and (11), extension stud (12), and nut (4).
3. Install cluster harness (13) on extension stud (12) with washer (14) and nut (15).
4. Connect speedometer driveshaft (3) to speedometer (8).
5. Install instrument cluster (9) on instrument panel (7) with four lockstuds (10).
6. Apply antiseize tape to male threads of elbow (1) and connect oil pressure tube (2) to oil pressure gage elbow (1).

4-11. SPEEDOMETER AND TACHOMETER REPLACEMENT (Contd)

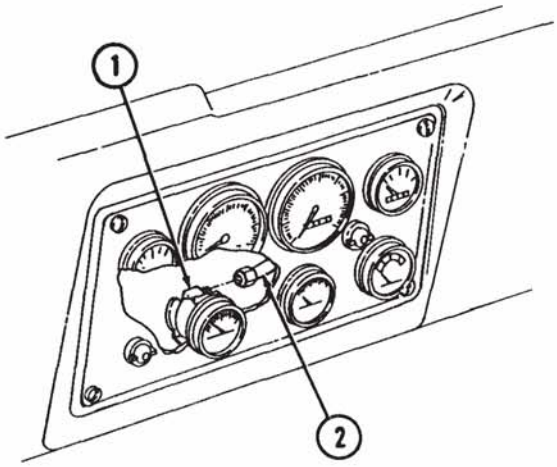

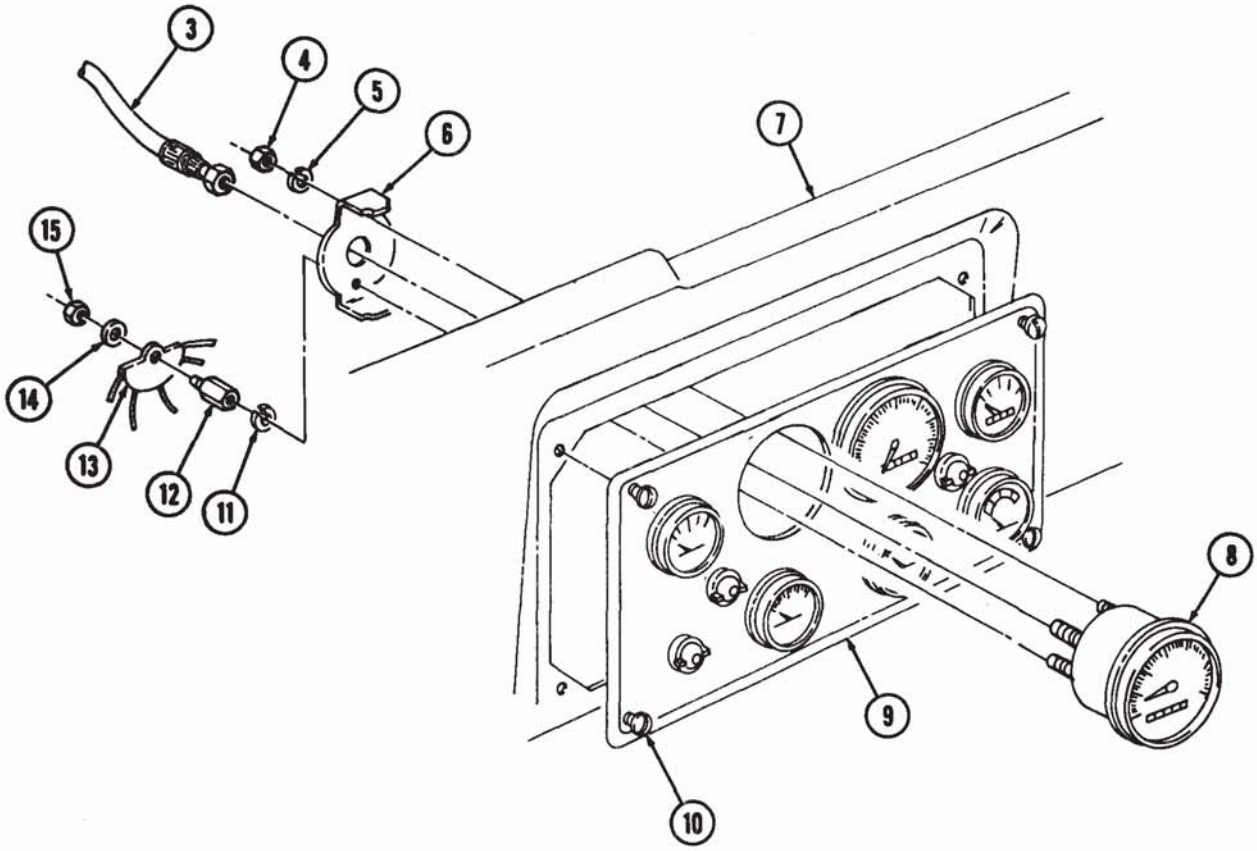

FOLLOW-ON TASKS: • Connect battery ground cable (para. 4-48) and check gage operation.
• Operate vehicle (TM 9-2320-260-10).

4-12. TACHOMETER FLEXIBLE DRIVESHAFT AND CORE MAINTENANCE

THIS TASK COVERS:

a. Removal
b. Inspection
c. Installation

INITIAL SETUP

APPLICABLE MODELS
All

MATERIALS/PARTS
Two gaskets
Lockwasher
Antiseize tape (Appendix C, Item 30)

REFERENCES (TM)
TM 9-2320-260-10
TM 9-2320-260-20P

EQUIPMENT CONDITION
- Parking brake set (TM 9-2320-260-10).
- Hood raised and secured (TM 9-2320-260-10).
- Battery ground cable disconnected (para. 4-48).

a. Removal

1. Disconnect oil pressure tube (2) from oil pressure gage elbow (1).
2. Loosen four lockstuds (8) and separate instrument cluster (9) from instrument panel (7).
3. Loosen coupling nut (4) and remove tachometer driveshaft (3) and gasket (5) from tachometer (6). Discard gasket (5).

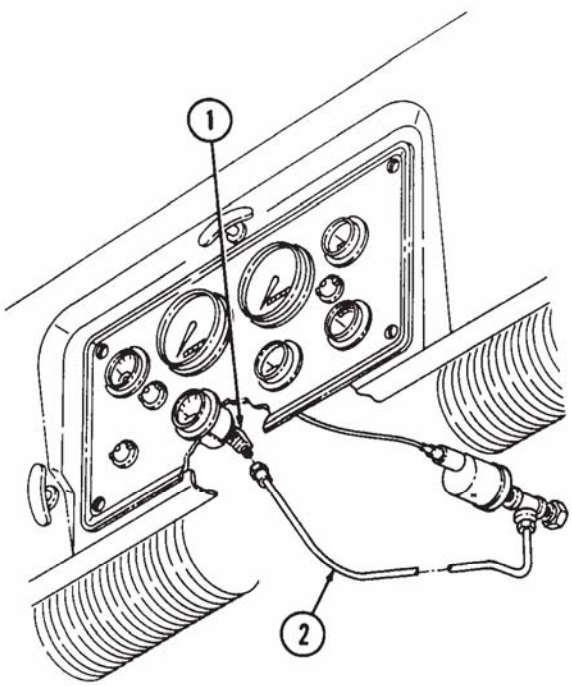

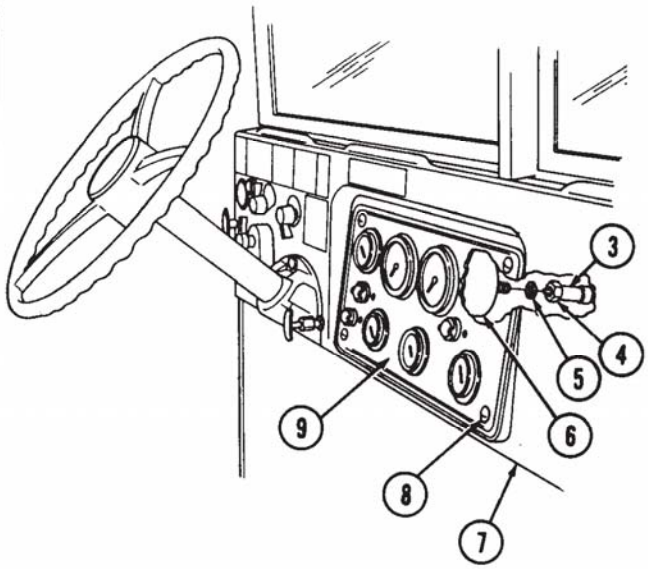

4-12. TACHOMETER FLEXIBLE DRIVESHAFT AND CORE MAINTENANCE (Contd)

4. Loosen coupling nut (4) and remove tachometer driveshaft (3) and gasket (17) from fuel injector pump (16). Discard gasket (17).
5. Remove screw (15), lockwasher (13), washer (12), clamp (11), and tachometer driveshaft (3) from air intake manifold (19). Discard lockwasher (13).
6. Remove grommet (14) and tachometer driveshaft (3) from firewall (10).
7. Remove C-clip (20) from injector pump end (18) of tachometer drive core (22).
8. Pull drive core (22) from tachometer end of driveshaft casing (21). Tachometer end has smaller coupling nut (4).

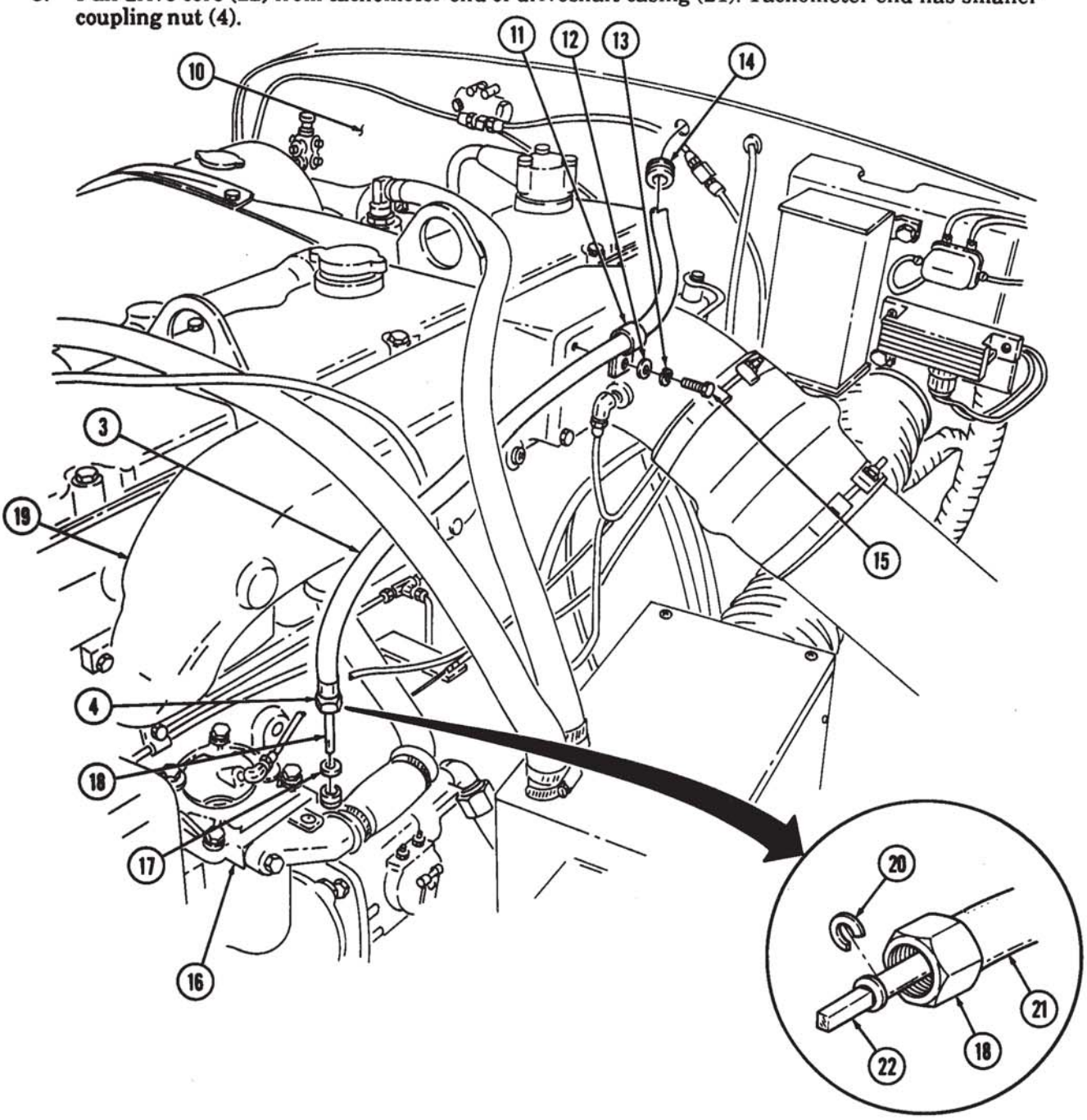

4-12. TACHOMETER FLEXIBLE DRIVESHAFT AND CORE MAINTENANCE (Contd)

b. Inspection

Inspect tachometer drive core (14) and casing (12) for bends, dents, and other damage. Replace tachometer driveshaft (9) if damaged.

c. Installatio

1. Inser end of drive core (14) through tachometer end (15) of driveshaft (9).
2. Inst (11) on drive core (14) at injector pump end (13) of driveshaft (9).
3. Plac t (5) on tachometer driveshaft (9) and insert driveshaft (9) through hole in firewall (1).
4. Insta net (5) on firewall (1).
5. Insta gasket (8) and tachometer driveshaft (9) on fuel injector pump (7).
6. Install ometer driveshaft (9) and clamp (2) on air intake manifold (10) with washer (3), new lockwasher (4), and screw (6).

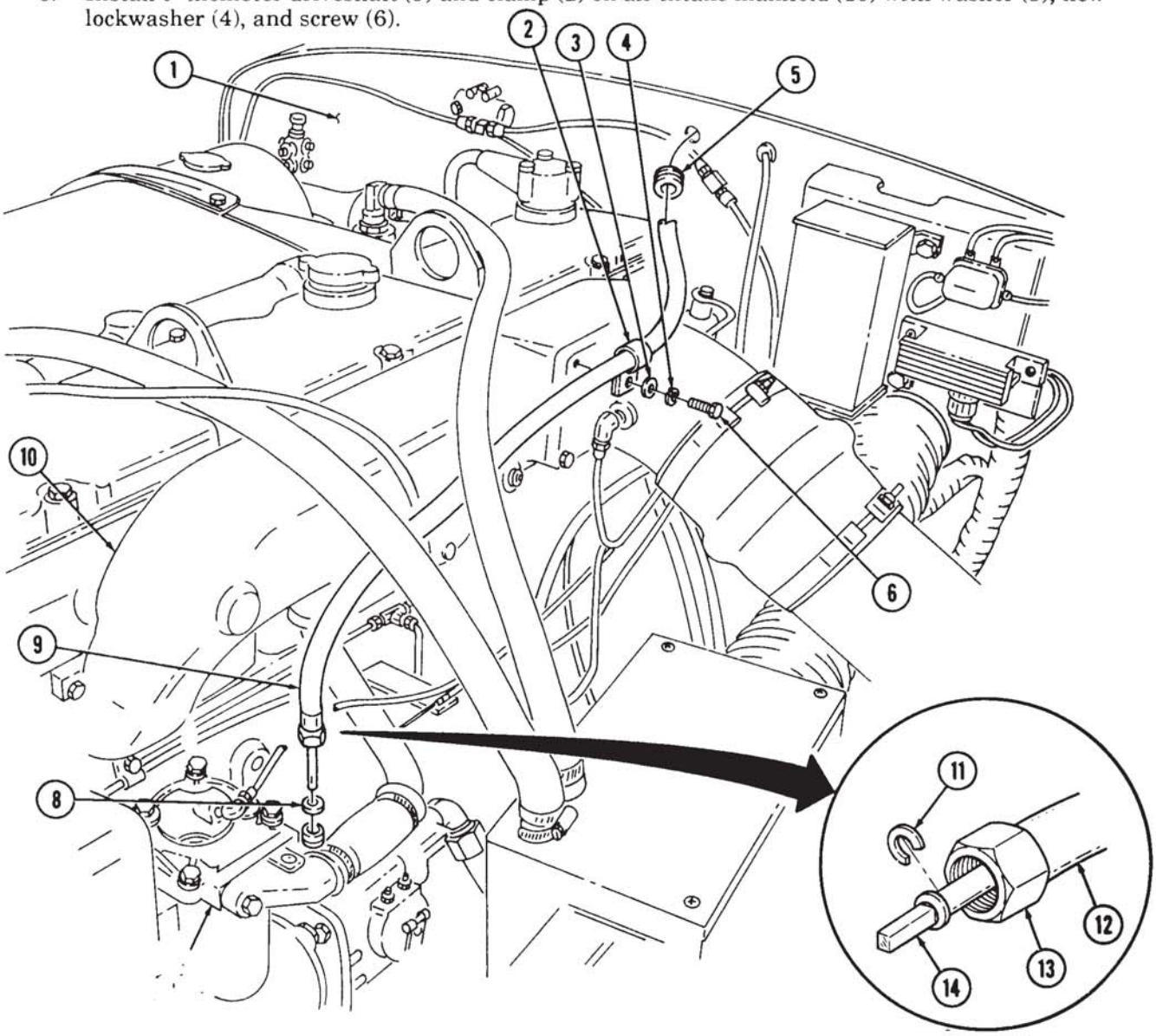

4-12. TACHOMETER FLEXIBLE DRIVESHAFT AND CORE MAINTENANCE (Contd)

7. Install new gasket (16) and tachometer driveshaft (9) on tachometer (17).
8. Install instrument cluster (20) on instrument panel (18) with four lockstuds (19).
9. Apply antiseize tape to male threads of oil pressure gage elbow (22) and install oil pressure tube (21) on oil pressure gage elbow (22).

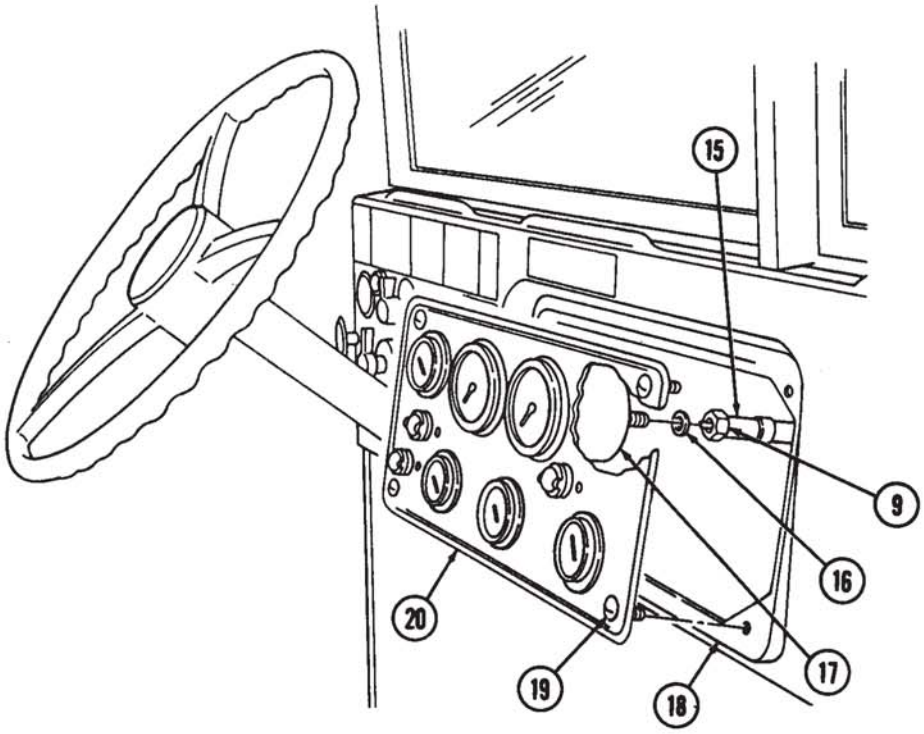

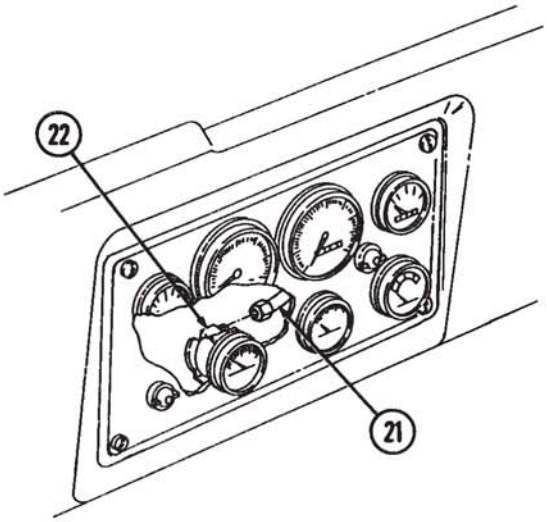

FOLLOW-ON TASK: Connect battery ground cable (para. 4-48).

4-13. SPEEDOMETER FLEXIBLE DRIVESHAFT AND CORE MAINTENANCE

THIS TASK COVERS:

a. Removal
b. Inspection
c. Installation

INITIAL SETUP

APPLICABLE MODELS
All

MATERIALS/PARTS
Two gaskets
Three locknuts

REFERENCES (TM)
TM 9-2320-260-10
TM 9-2320-260-20P

EQUIPMENT CONDITION
- Parking brake set (TM 9-2320-260-10).
- Hood raised and secured (TM 9-2320-260-10).
- Battery ground cable disconnected (para. 4-48).
- Front and intermediate cab tunnels removed (para. 11-30).

a. Removal

1. Disconnect oil pressure tube (3) from oil pressure gage elbow (4).
2. Loosen four lockstuds (8) and separate instrument cluster (2) from instrument panel (1).
3. Remove speedometer driveshaft (7) and gasket (6) from speedometer (5). Discard gasket (6).

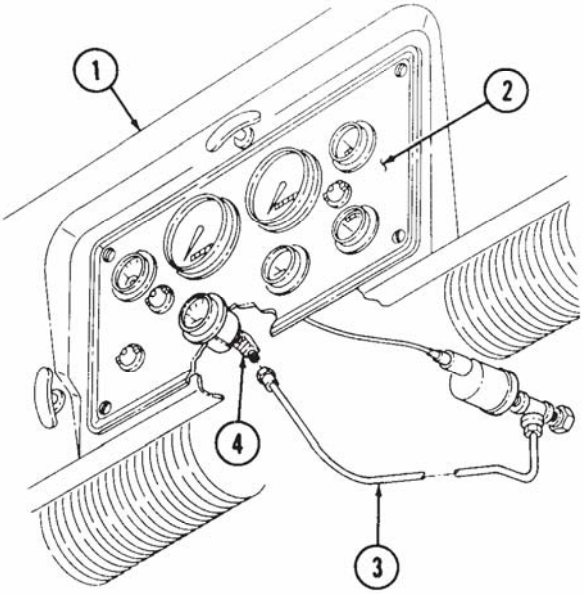

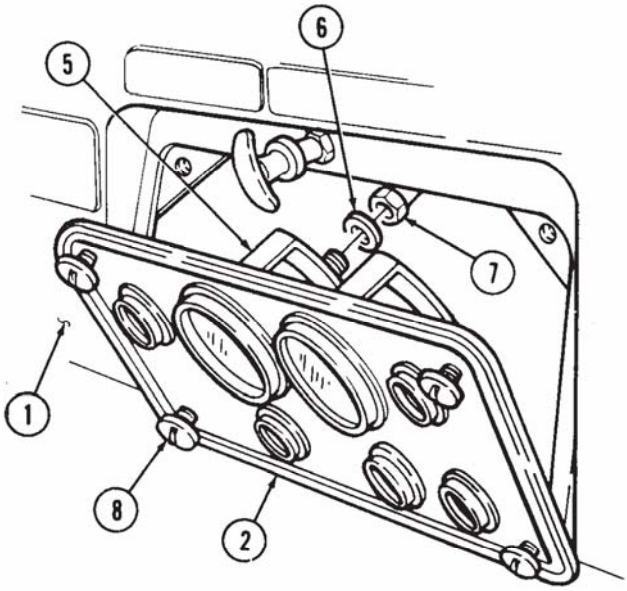

4-13. SPEEDOMETER FLEXIBLE DRIVESHAFT AND CORE MAINTENANCE (Contd)

NOTE

Assistant will help with steps 4, 5, and 6.

4. Remove nut (16), washer (15), screw (13), clamp (14), and speedometer driveshaft (7) from firewall (17).
5. Remove locknut (19), screw (12), clamp (20), and speedometer driveshaft (7) from cab floor (18). Discard locknut (19).
6. Open master cylinder hatch (10) and remove locknut (21), screw (11), clamp (22), and speedometer driveshaft (7) from crossmember (23). Discard locknut (21).
7. Remove locknut (26), screw (9), clamp (25), and speedometer driveshaft (7) from cab support (24). Discard locknut (26).
8. Remove speedometer driveshaft (7) and gasket (28) from drive adapter (27). Discard gasket (28).
9. Pull speedometer driveshaft (7) from hole in cab floor (18).
10. Remove C-clip (29) from drive joint end of speedometer driveshaft (7).
11. Remove core (31) from speedometer end of speedometer driveshaft (7). Speedometer end has smaller coupling nut (30).

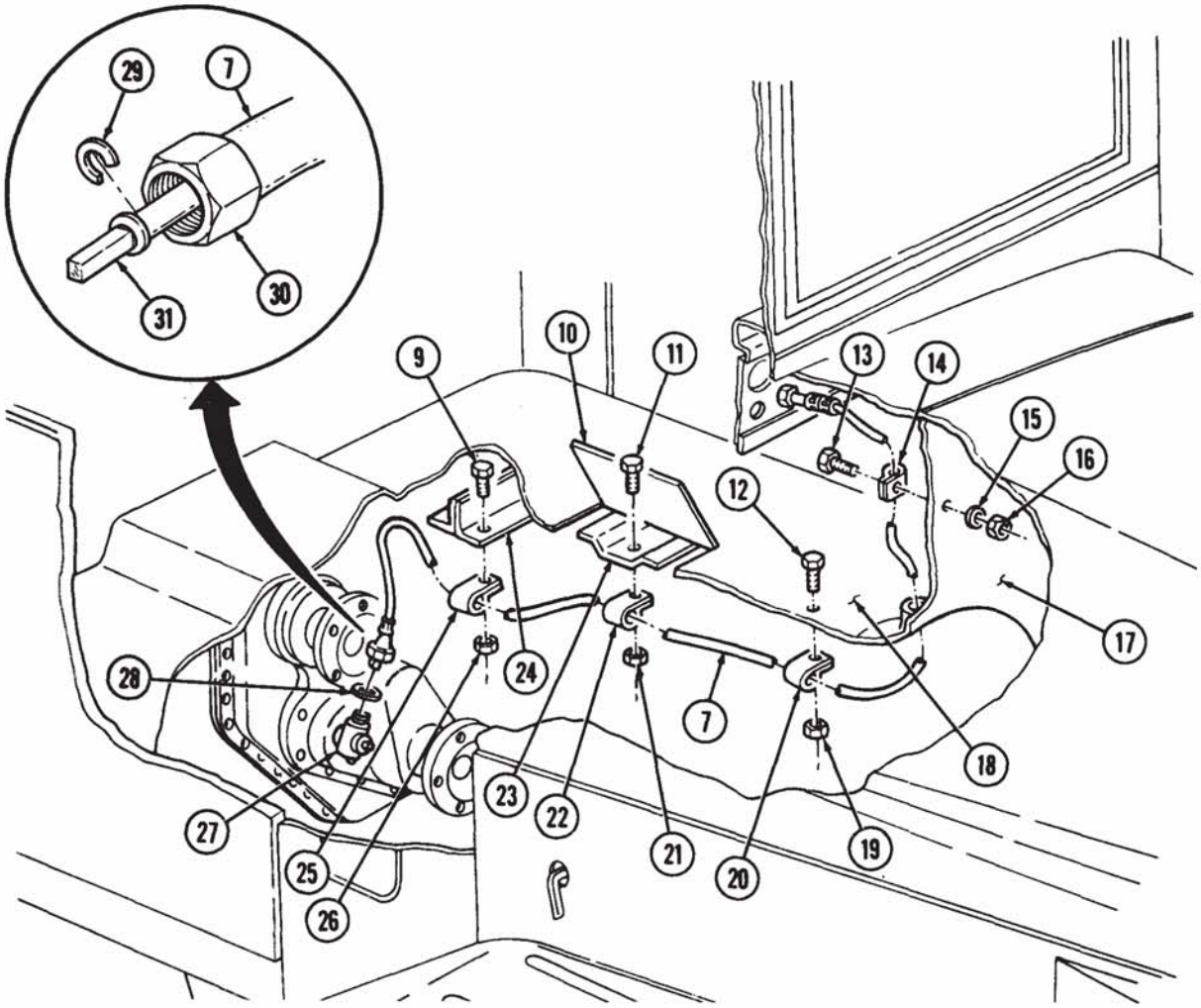

4-13. SPEEDOMETER FLEXIBLE DRIVESHAFT AND CORE MAINTENANCE (Contd)

b. Inspection

Inspect speedometer drive core (24) and driveshaft (22) for bends, dents, and other damage. Replace speedometer driveshaft (22) if damaged.

c. Installation

1. Insert keyed end of drive core (24) through speedometer end (6) of driveshaft (22) and install C-clip (23) on drive core (24).
2. Install new gasket (21) and connect speedometer driveshaft (22) on drive adapter (20).
3. Route speedometer driveshaft (22) under and through hole in cab floor (11).
4. Install speedometer driveshaft (22) on cab support (17) with clamp (19), screw (1), and new locknut (18).

NOTE

Assistant will help with steps 5, 6, and 7.

5. Install speedometer driveshaft (22) on crossmember (16) with clamp (15), screw (3), and new locknut (14). Close master cylinder hatch (2).
6. Install speedometer driveshaft (22) on cab floor (11) with clamp (13), screw (4), and new locknut (12).

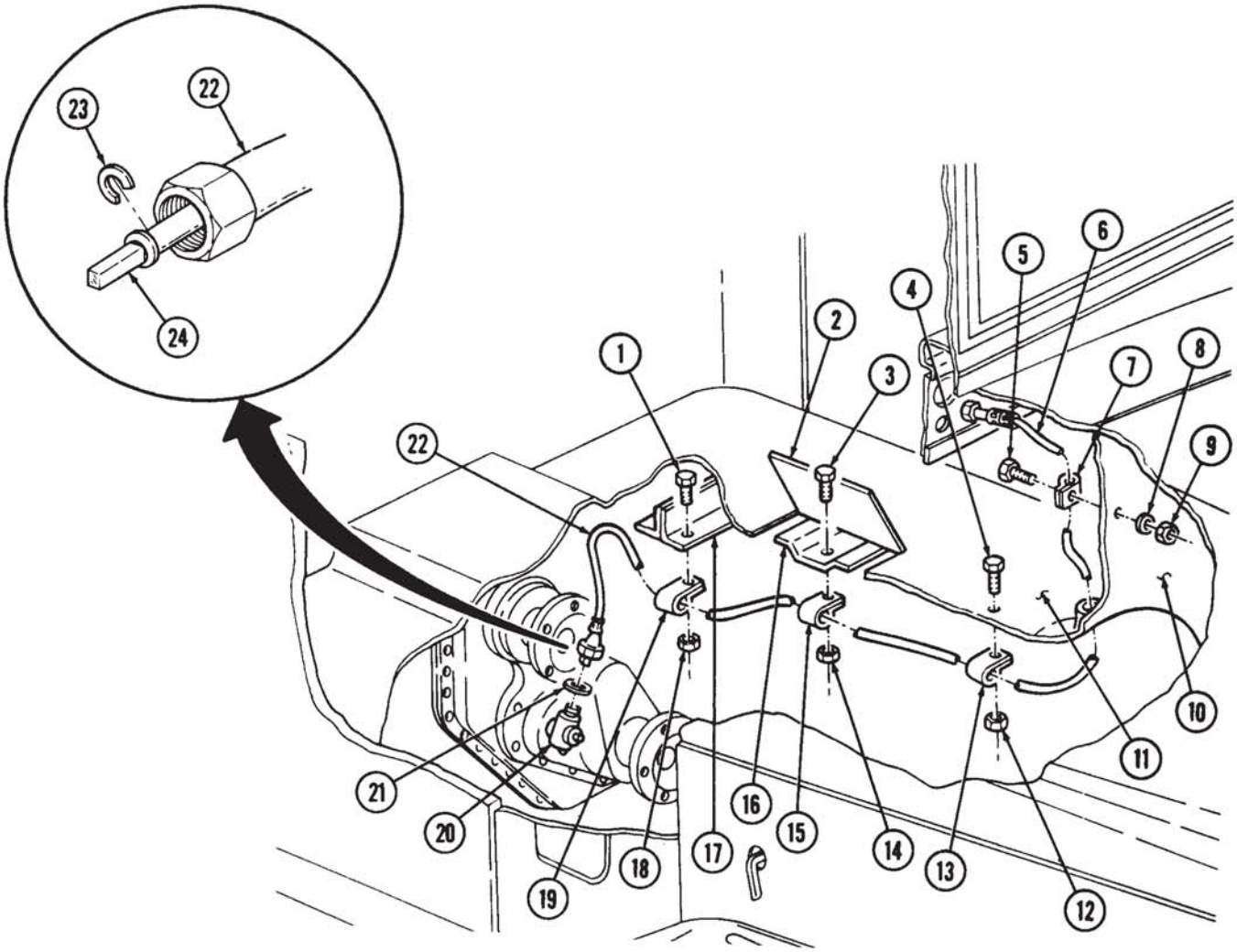

4-13. SPEEDOMETER FLEXIBLE DRIVESHAFT AND CORE MAINTENANCE (Contd)

7. Install speedometer driveshaft (22) on firewall (10) with clamp (7), screw (5), washer (8), and nut (9).
8.. Instill new gasket (26) and speedometer driveshaft (22) on speedometer (25).
9. Install instrument cluster (27) on instrument panel (29) with four lockstuds (28).
10. Wrap threads of oil pressure gage elbow (31) with antiseize tape and connect oil pressure tube (30).

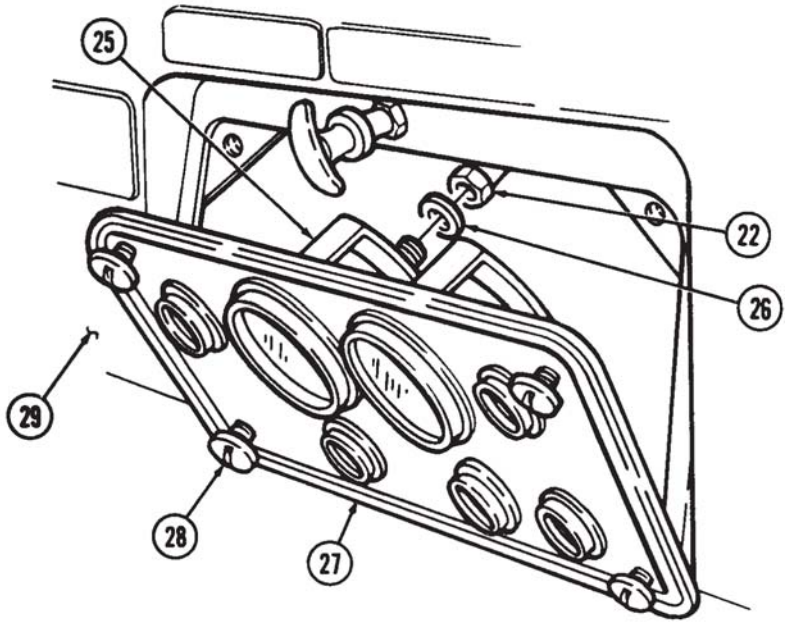

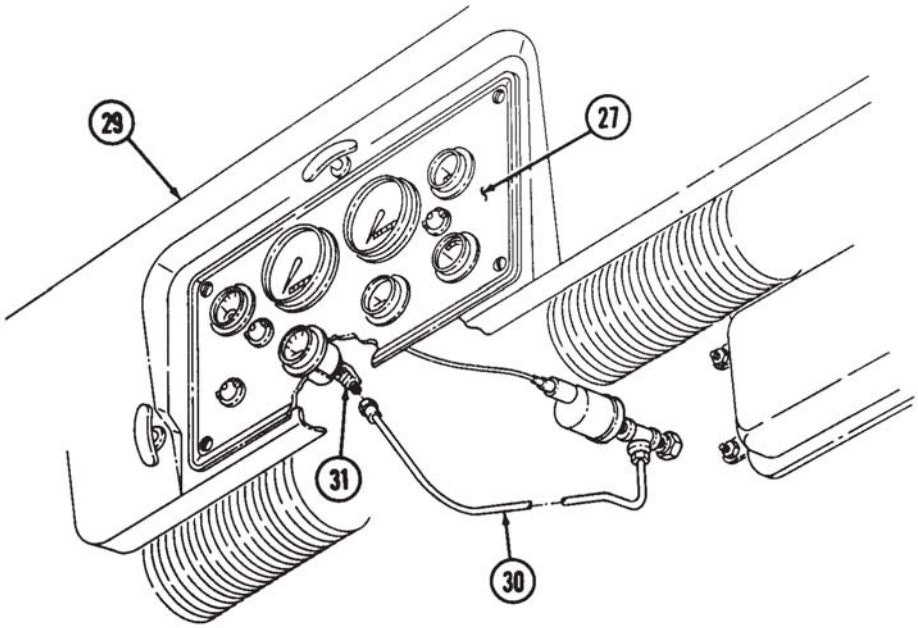

FOLLOW-ON TASKS: • **Install front and intermediate cab tunnels (para. 11-30).**
• **Connect battery ground cable (para. 4-48).**

4-14. SPEEDOMETER DRIVE ADAPTER REPLACEMENT

THIS TASK COVERS:

a. Removal **b. Installation**

INITIAL SETUP

APPLICABLE MODELS
All

MATERIALS/PARTS
Gasket

REFERENCES (TM)
TM 9-2320-260-10
TM 9-2320-260-20P

EQUIPMENT CONDITION
Parking brake set (TM 9-2320-260-10).

a. Removal

1. Remove speedometer driveshaft (1) and gasket (2) from drive adapter (3). Discard gasket (2).
2. Remove drive adapter (3), adapter sleeve (4), and shaft (5) from transfer case (6).

b. Installation

1. Install shaft (5), adapter sleeve (4), and drive adapter (3) on transfer case (6).
2. Install new gasket (2) and speedometer driveshaft (1) on drive adapter (3).

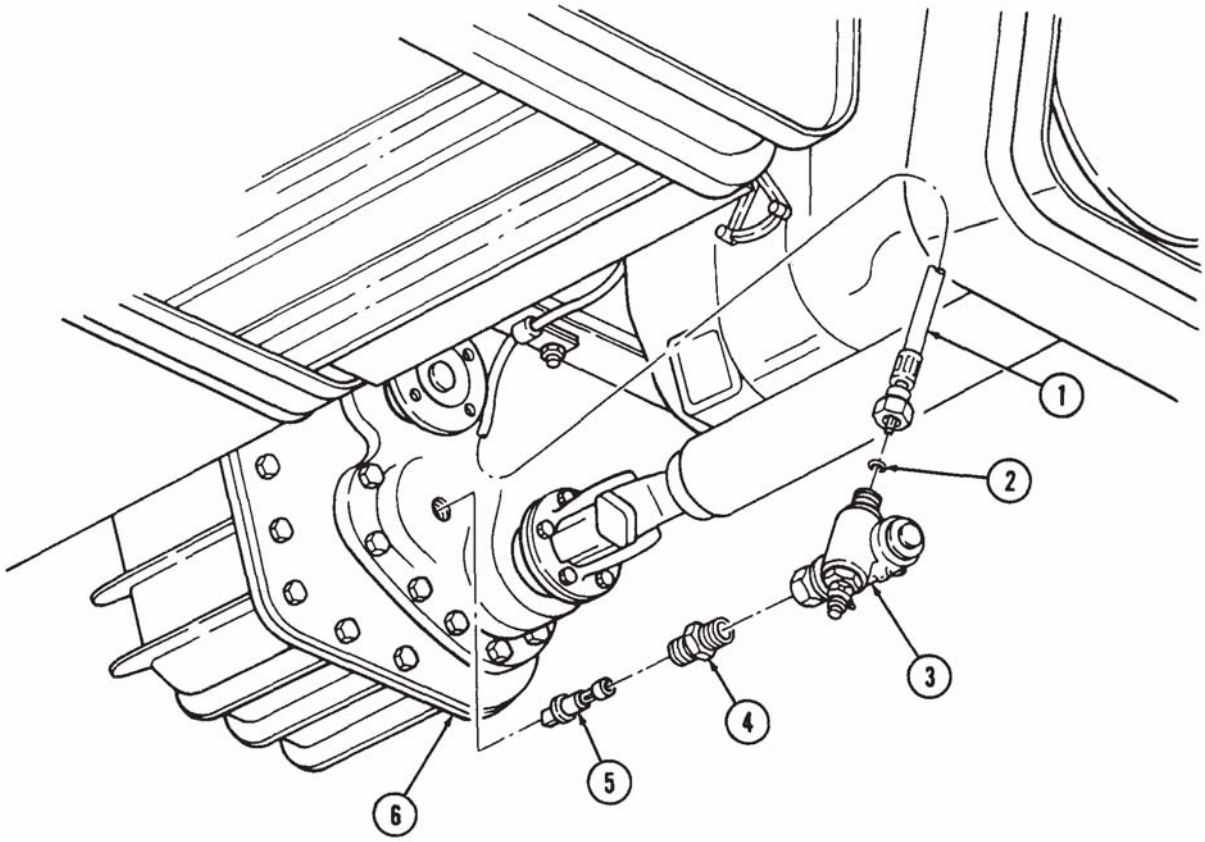

4-15. HEADLIGHT HIGH BEAM INDICATOR AND LAMP REPLACEMENT

THIS TASK COVERS:

a. Removal **b. Installation**

INITIAL SETUP

APPLICABLE MODELS
All

MATERIALS/PARTS
Two lockwashers

REFERENCES (TM)
TM 9-2320-260-10
TM 9-2320-260-20P

EQUIPMENT CONDITION
- Parking brake set (TM 9-2320-260-10).
- Battery ground cable disconnected (para. 4-48).

NOTE

Headlight high beam indicator, low air pressure warning, and instrument cluster light assemblies are replaced the same way. This procedure covers headlight high beam indicator assembly only.

a. Removal

1. Remove lens (2) and gasket (3) from lamp bracket (7).
2. Remove lamp (4) from lamp bracket (7).
3. Disconnect connector (8) from lamp bracket (7).
4. Remove two screws (5), lockwashers (6), and lamp bracket (7) from instrument cluster (1). Discard lockwashers (6).

b. Installation

1. Connect connector (8) to lamp bracket (7).
2. Install lamp bracket (7) on instrument cluster (1) with two new lockwashers (6) and screws (5).
3. Install lamp (4) in lamp bracket (7).
4. Install gasket (3) and lens (2) on lamp bracket (7).

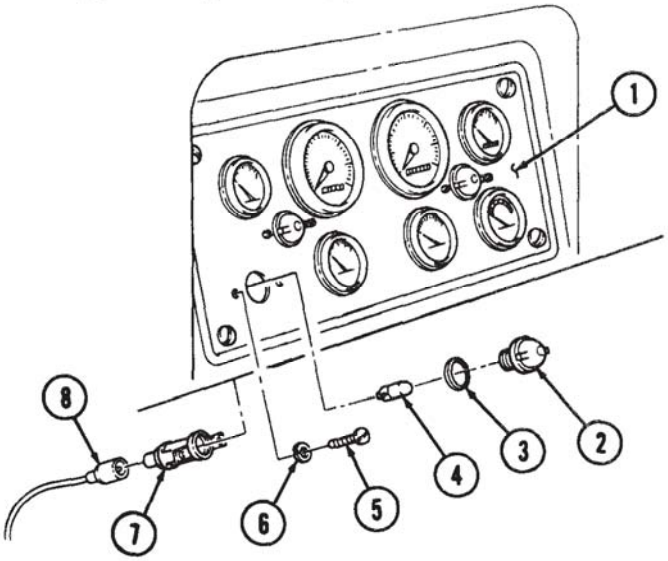

FOLLOW-ON TASK: Connect battery ground cable (para. 4-48).

4-16. LIGHT SWITCH REPLACEMENT

THIS TASK COVERS:

a. Removal **b. Installation**

INITIAL SETUP

APPLICABLE MODELS
All

MATERIALS/PARTS
Three lockwashers

REFERENCES (TM)
TM 9-2320-260-10
TM 9-2320-260-20P

EQUIPMENT CONDITION
- Parking brake set (TM 9-2320-260-10).
- Battery ground cable disconnected (para. 4-48).

a. Removal

1. Remove three screws (2), lockwashers (3), levers (4), and washers (5) from light switch (1). Discard lockwashers (3).
2. Remove four screws (6) from light switch (1). Push light switch (1) through instrument panel (8).
3. Disconnect wiring harness connector (7) from light switch (1).

b. Installation

1. Connect wiring harness connector (7) to light switch (1).
2. Position light switch (1) through instrument panel (8) and install four screws (6).
3. Install three washers (5) and levers (4) on light switch (1) with three new lockwashers (3) and screws (2).

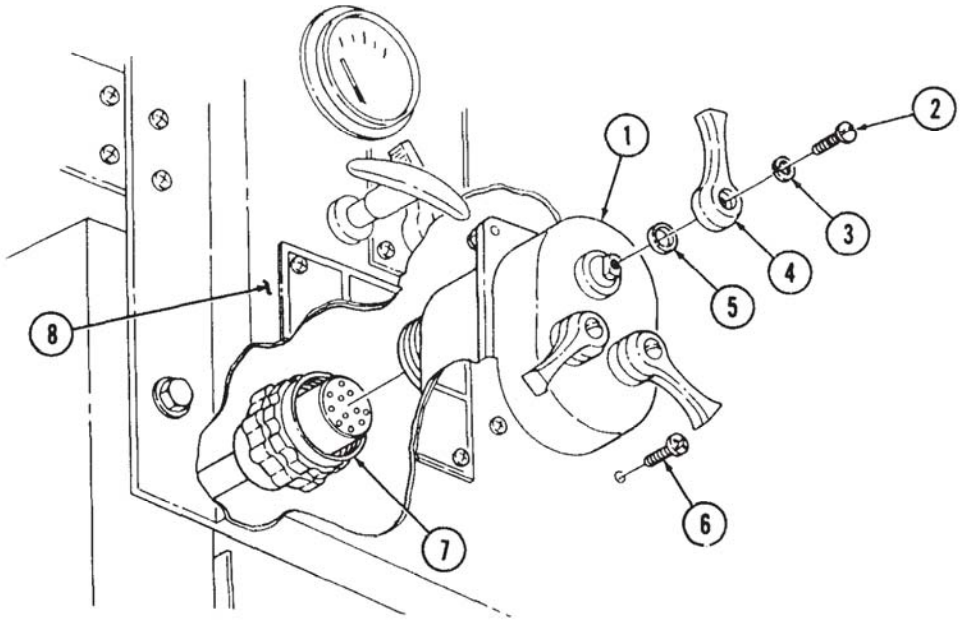

FOLLOW-ON TASKS:
- Connect battery ground cable (para. 4-48).
- Check operation of lights and light switch (TM 9-2320-260-10).

4-17. BATTERY, IGNITION, AND ACCESSORY SWITCH REPLACEMENT

THIS TASK COVERS:

a. Removal **b. Installation**

INITIAL SETUP

APPLICABLE MODELS
All

MATERIALS/PARTS
Two lockwashers

REFERENCES (TM)
TM 9-2320-260-10
TM 9-2320-260-20P

EQUIPMENT CONDITION
- Parking brake set (TM 9-2320-260-10).
- Battery ground cable disconnected (para. 4-48).

NOTE

Battery, ignition, and accessory switches are replaced basically the same way. This procedure covers the battery switch only.

a. Removal

1. Remove screw (12), lockwasher (11), and handle (10) from switch (3). Discard lockwasher (11).
2. Remove nut (9), lockwasher (8), and data plate (7) from switch (3) and push switch (3) from instrument panel (5). Discard lockwasher (8).

NOTE

- Tag all wires for installation.
- Accessory switches for the M816, M817, and M818 models have one or two dummy plugs.
- Ignition switch has three electrical leads.

3. Disconnect wires (1) and dummy plugs (2) from switch (3).

b. Installation

1. Connect wires (1) and dummy plugs (2) in switch (3).
2. Aline locator pin (4) with hole (6) and install switch (3) on instrument panel (5) with data plate (7), new lockwasher (8), and nut (9).
3. Install handle (10) on switch (3) with new lockwasher (11) and screw (12).

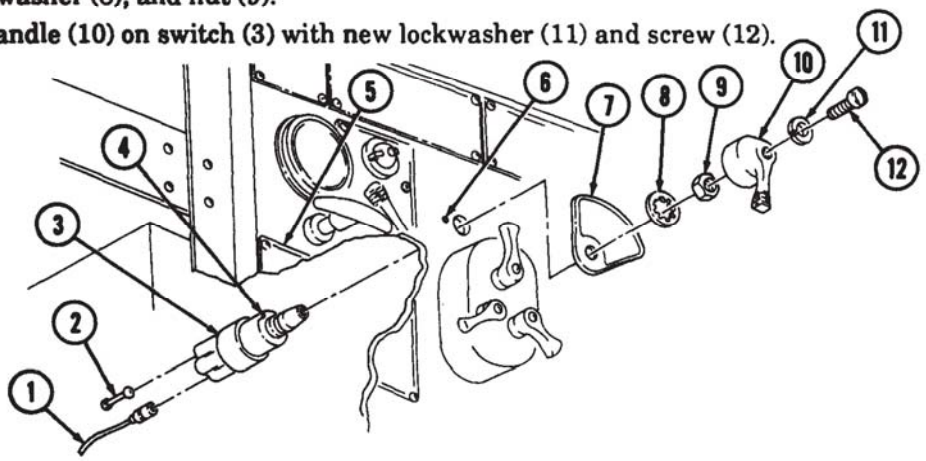

FOLLOW-ON TASK: Connect battery ground cable (para. 4-48).

4-18. FLOODLIGHT SWITCH AND FUEL SELECTOR SWITCH REPLACEMENT

THIS TASK COVERS:

a. Removal

b. Installation

INITIAL SETUP

APPLICABLE MODELS
All

MATERIALS/PARTS
Two locknuts

REFERENCES (TM)
TM 9-2320-260-10
TM 9-2320-260-20P

EQUIPMENT CONDITION
- Parking brake set (TM 9-2320-260-10).
- Battery ground cable disconnected (para. 4-48).

NOTE

Floodlight and fuel selector switches are replaced basically the same. This procedure covers the fuel selector switch only.

a. Removal

1. Disconnect three wires (12) from fuel selector switch (11).
2. Remove screw (9), washer (8), handle (7), nut (6), washer (5), data plate (4), and fuel selector switch (11) from bracket (3).
3. Remove two screws (10), locknuts (1), and bracket (3) from instrument panel (2).

b. Installation

1. Install bracket (3) on instrument panel (2) with two screws (10) and new locknuts (1).
2. Install fuel selector switch (11) and data plate (4) with washer (5), nut (6), handle (7), washer (8), and screw (9).
3. Install three wires (12) on fuel selector switch (11).

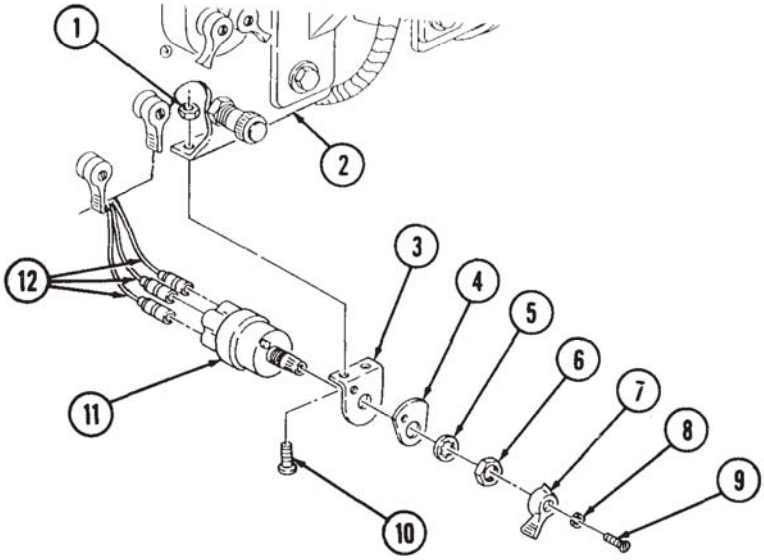

FOLLOW-ON TASK: Connect battery ground cable (para. 4-48).

4-19. OIL PRESSURE LOCKOUT SWITCH REPLACEMENT

THIS TASK COVERS:

a. Removal **b. Installation**

INITIAL SETUP

APPLICABLE MODELS
All

MATERIALS/PARTS
Antiseize tape (Appendix C, Item 30)

REFERENCES (TM)
TM 9-2320-260-10
TM 9-2320-260-20P

EQUIPMENT CONDITION
Parking brake set (TM 9-2320-260-10).

a. Removal

NOTE

Have drainage container ready to catch oil.

1. Disconnect lead (2) from oil pressure lockout switch (3).
2. Disconnect tube (5) from elbow (1) and tee (4).
3. Remove oil pressure lockout switch (3) from tee (4).

b. Installation

1. Apply antiseize tape to male threads of elbow (1), oil pressure lockout switch (3), and tube (5).
2. Install oil pressure lockout switch (3) on tee (4).
3. Connect tube (5) to tee (4) and elbow (1).
4. Connect lead (2) to oil pressure lockout switch (3).

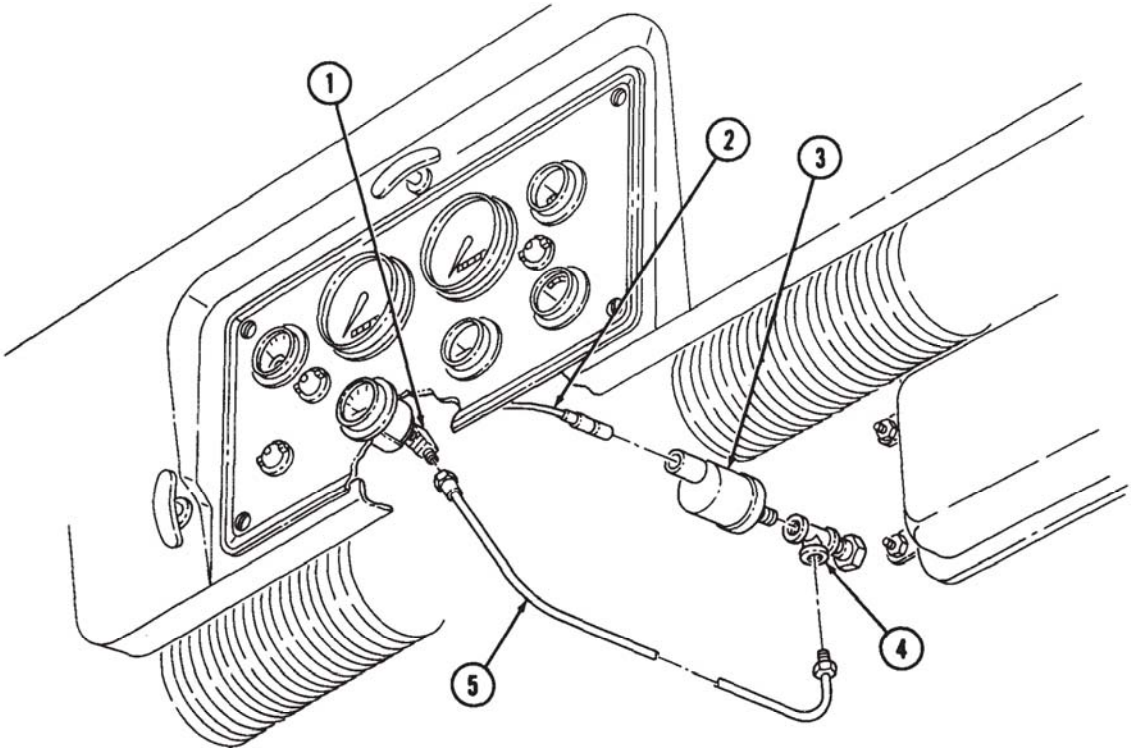

4-20. CIRCUIT BREAKER REPLACEMENT

THIS TASK COVERS:

a. Removal **b. Installation**

INITIAL SETUP

APPLICABLE MODELS
All

REFERENCES (TM)
TM 9-2320-260-10
TM 9-2320-260-20P

EQUIPMENT CONDITION
- Parking brake set (TM 9-2320-260-10).
- Battery ground cable disconnected (para. 4-48).

NOTE

All circuit breakers are replaced the same way. The M816 and M819 models have three circuit breakers mounted to the firewall.

a. Removal

1. Disconnect wires (4) and (5) from circuit breaker (2).
2. Remove two screws (3) and circuit breaker (2) from firewall (1).

b. Installation

1. Install circuit breaker (2) on firewall (1) with two screws (3).
2. Connect wires (4) and (5) to circuit breaker (2).

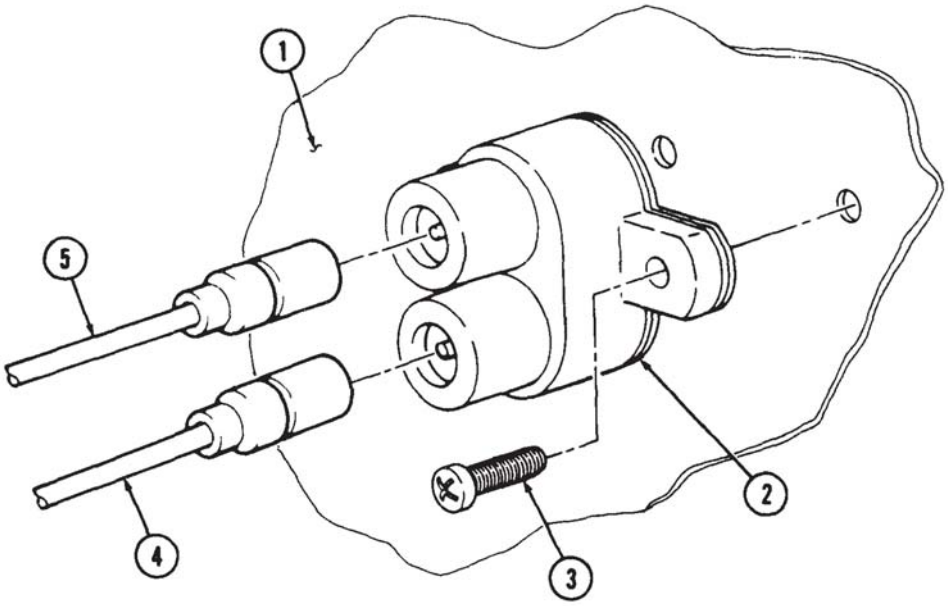

FOLLOW-ON TASK Connect battery ground cable (para. 4-48).

4-21. MICROBRAKE LOCK SWITCH REPLACEMENT

THIS TASK COVERS:

a. Removal **b. Installation**

INITIAL SETUP

APPLICABLE MODELS
M816, M819, M821

REFERENCES (TM)
TM 9-2320-260-10
TM 9-2320-260-20P

EQUIPMENT CONDITION
- Parking brake set (TM 9-2320-260-10).
- Battery ground cable disconnected (para. 4-48).

a. Removal

1. Remove two screws (5) and push switch (3) through instrument panel (4).
2. Disconnect two wires (2) and remove switch (3).
3. Remove three screws (1) and data plate (6) from instrument panel (4). Replace if data plate (6) cannot be read.

b. Installation

1. Install data plate (6) on instrument panel (4) with three screws (1).
2. Connect two wires (2) on switch (3).
3. Position switch (3) through hole in instrument panel (4) and install with two screws (5).

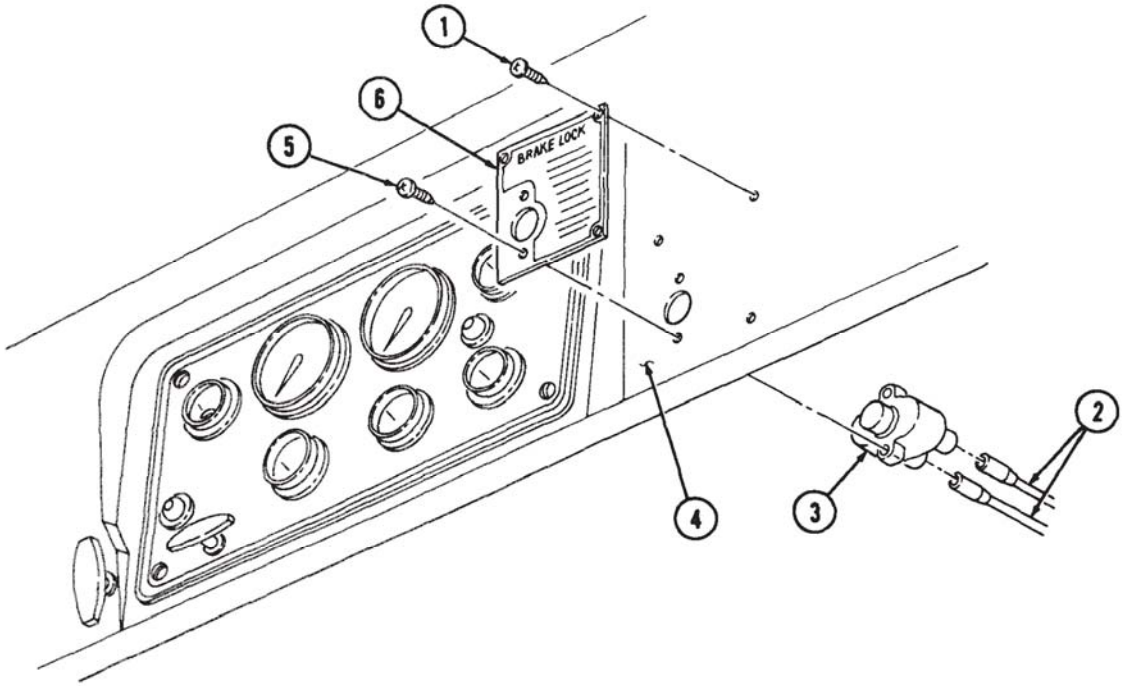

FOLLOW-ON TASKS:
- Connect battery ground cable (para. 4-48).
- Check microbrake operation (TM 9-2320-260-10).

4-22. AUXILIARY POWER RECEPTACLE AND SOCKET REPLACEMENT

THIS TASK COVERS:

a. Removal

b. Installation

INITIAL SETUP

APPLICABLE MODELS
M816, M819, M821

MATERIALS/PARTS
Four locknuts

REFERENCES (TM)
TM 9-2320-260-10
TM 9-2320-260-20P

EQUIPMENT CONDITION
- Parking brake set (TM 9-2320-260-10).
- Battery ground cable disconnected (para. 4-48).

a. Removal

1. Disconnect receptacle lead (1) from connector (11).
2. Remove four locknuts (10), screws (2), and receptacle (3) from instrument panel (6). Discard locknuts (10).

NOTE

Perform steps 3, 4, and 5 for M816 model.

3. Remove cable (4) and clip (5) from instrument panel (6).
4. Remove screw (9) and cable (4) from socket (8).
5. Loosen screw (7) and remove socket (8) from instrument panel (6).

b. Installation

NOTE

Perform steps 1, 2 and 3 for M816 model.

1. Install socket (8) on instrument panel (6) with screw (7).
2. Install cable (4) on socket (8) with screw (9).
3. Install clip (5) and cable (4) on instrument panel (6).
4. Install receptacle lead (1) through hole in instrument panel (6) and connect lead (1) to connector (11).
5. Install receptacle (3) on instrument panel (6) with four screws (2) and new locknuts (10).

4-22. AUXILIARY POWER RECEPTACLE AND SOCKET REPLACEMENT (Contd)

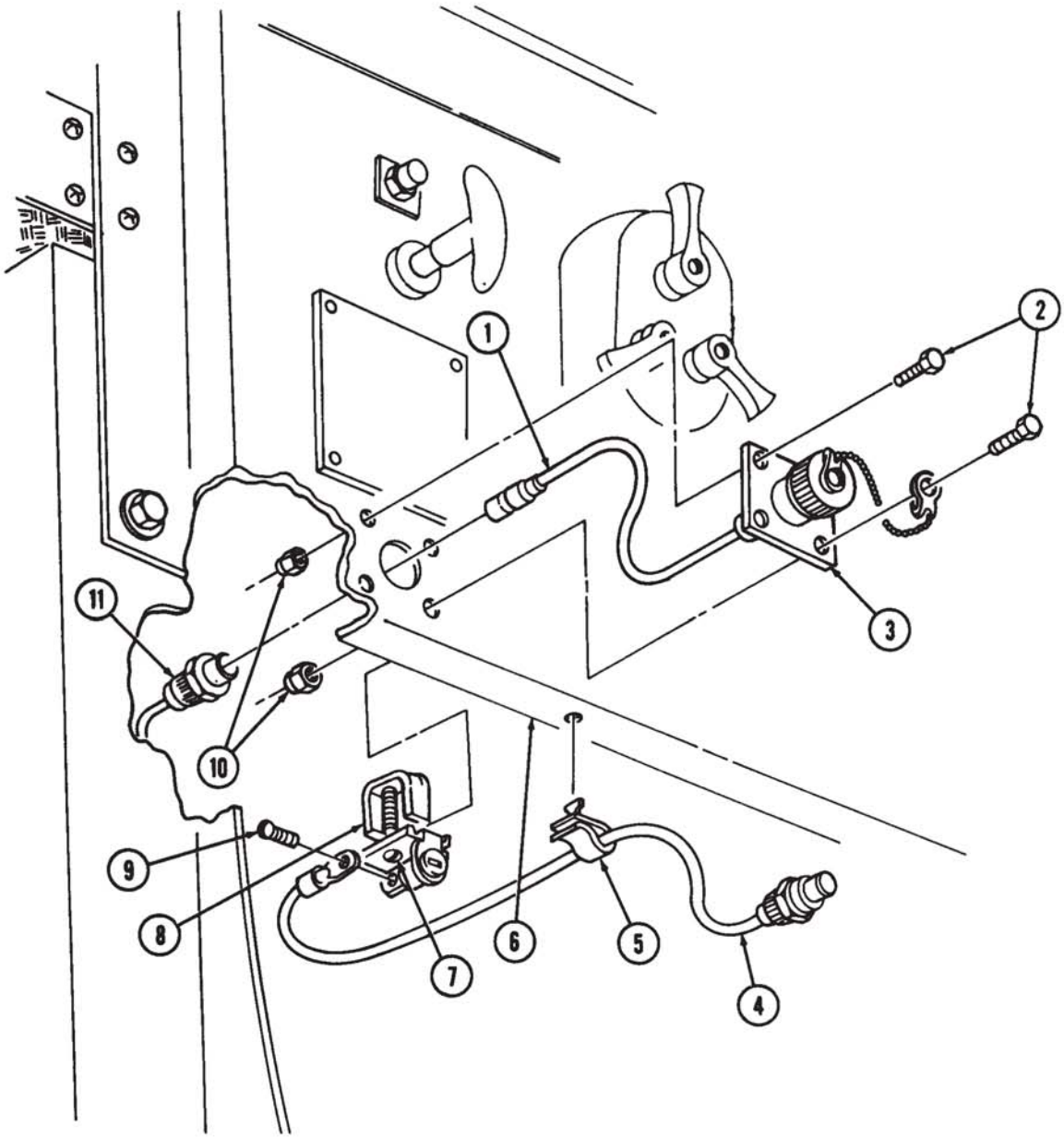

FOLLOW-ON TASK: Connect battery ground cable (para. 4-48).

4-23. LOW AIR PRESSURE BUZZER REPLACEMENT

THIS TASK COVERS:

a. Removal

b. Installation

INITIAL SETUP

APPLICABLE MODELS
All

MATERIALS/PARTS
Three locknuts
Six lockwashers

REFERENCES (TM)
TM 9-2320-260-10
TM 9-2320-260-20P

EQUIPMENT CONDITION
Parking brake set (TM 9-2320-260-10).

a. Removal

1. Loosen two clamps (4) and remove diverter duct (2) from diverter (1) and diverter adapter (3).
2. Disconnect lead (9) from pressure buzzer (8).

NOTE

Assistant will help with step 3.

3. Remove three locknuts (7), screws (10), six lockwashers (6), and pressure buzzer (8) from firewall (5). Discard locknuts (7) and lockwashers (6).

b. Installation

NOTE

Assistant will help with step 1.

1. Install pressure buzzer (8) on firewall (5) with six new lockwashers (6), three screws (10), and new locknuts (7).
2. Connect lead (9) to pressure buzzer (8).
3. Install diverter duct (2) on diverter (1) and diverter adapter (3) with two clamps (4).

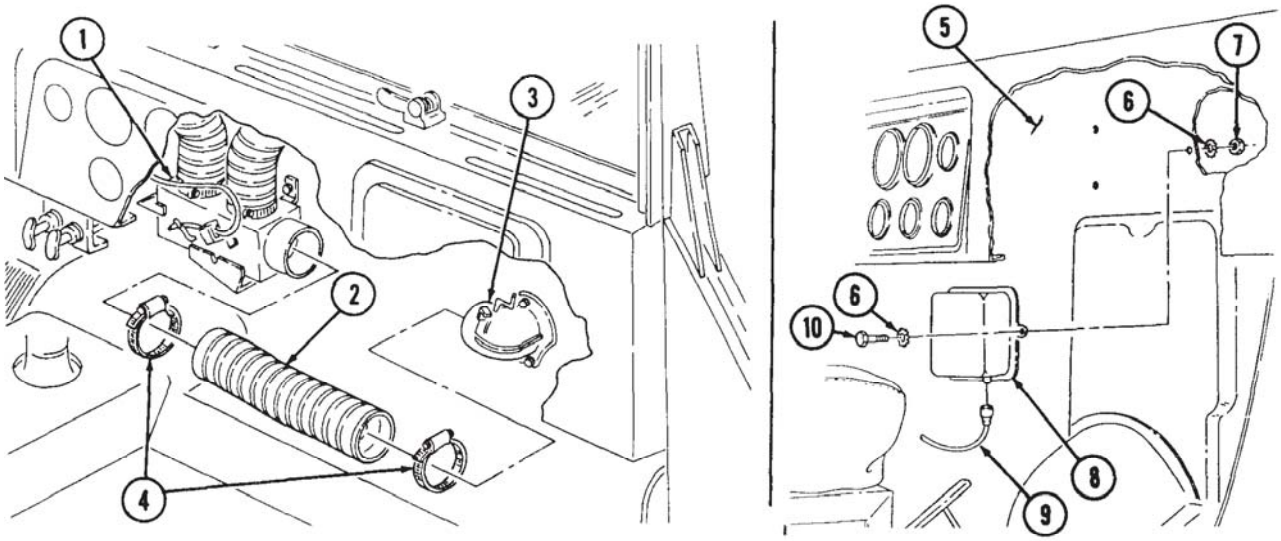

FOLLOW-ON TASK: Install heater diverter (para. 14-9).

4-24. FUEL LEVEL SENDING UNIT REPLACEMENT

THIS TASK COVERS:

a. Removal **b. Installation**

INITIAL SETUP

APPLICABLE MODELS
All

MATERIALS/PARTS
Gasket

REFERENCES (TM)
TM 9-2320-260-10
TM 9-2320-260-20P

EQUIPMENT CONDITION
- Parking brake set (TM 9-2320-260-10).
- Battery ground cable disconnected (para. 4-48).
- Fuel tank removed (para. 3-24).

GENERAL SAFETY INSTRUCTIONS
Diesel fuel is flammable. Do not perform this task near open flame.

WARNING

Diesel fuel is flammable. Do not perform fuel system procedures near open flame. Injury to personnel may result.

a. Removal

Remove five screws (1), washers (5), sending unit (2), and gasket (3) from fuel tank (4). Discard gasket (3).

b. Installation

Install new gasket (3) and sending unit (2) on fuel tank (4) with five washers (5) and screws (1).

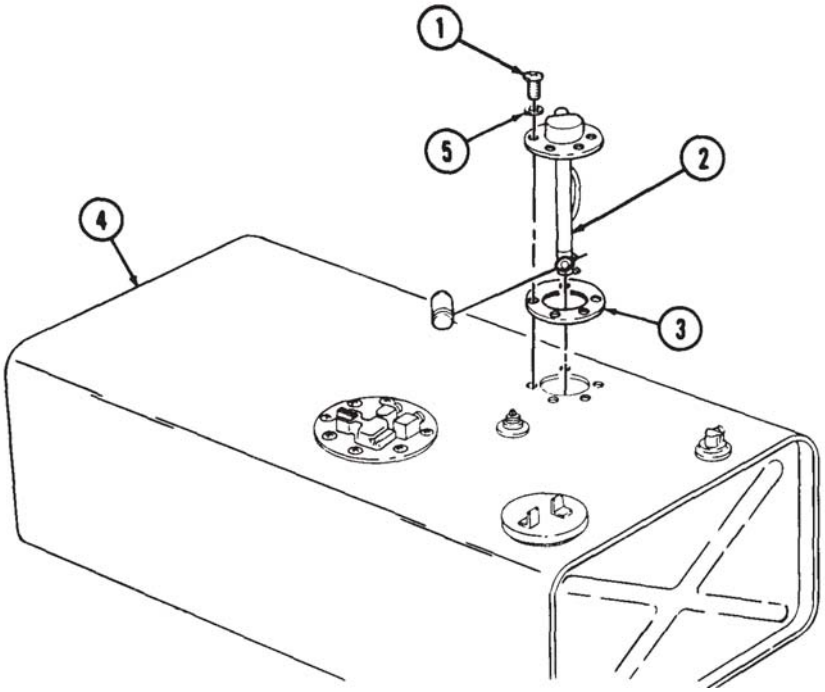

FOLLOW-ON TASKS: • Install fuel tank (para 3-24).
• Connect battery ground cable (para. 4-48).

4-25. STOPLIGHT PRESSURE SWITCH REPLACEMENT

THIS TASK COVERS:

a. Removal **b. Installation**

INITIAL SETUP

APPLICABLE MODELS
All

MATERIALS/PARTS
Four locknuts
Antiseize tape (Appendix C, Item 30)

REFERENCES (TM)
TM 9-2320-260-10
TM 9-2320-260-20P

EQUIPMENT CONDITION
- Parking brake set (TM 9-2320-260-10).
- Air reservoirs drained (TM 9-2320-260-10).
- Battery ground cable disconnected (para. 4-48).

GENERAL SAFETY INSTRUCTIONS
Do not disconnect air lines before draining air reservoirs.

WARNING

Do not disconnect air lines before draining air reservoirs. Small parts under pressure may shoot out with high velocity, causing injury to personnel.

a. Removal

1. Remove four locknuts (6), screws (8), washers (7), and shield (5) from air-hydraulic cylinder (4). Discard locknuts (6).

NOTE

Tag all electrical leads for installation.

2. Disconnect leads (1) from stoplight pressure switch (2).
3. Remove stoplight pressure switch (2) from tee (3).

b. Installation

1. Apply antiseize tape to male threads of stoplight pressure switch (2).
2. Install stoplight pressure switch (2) on tee (3).
3. Connect leads (1) on stoplight pressure switch (2).
4. Install shield (5) on air-hydraulic cylinder (4) with four washers (7), screws (8), and new locknuts (6).

4-25. STOPLIGHT PRESSURE SWITCH REPLACEMENT (Contd]

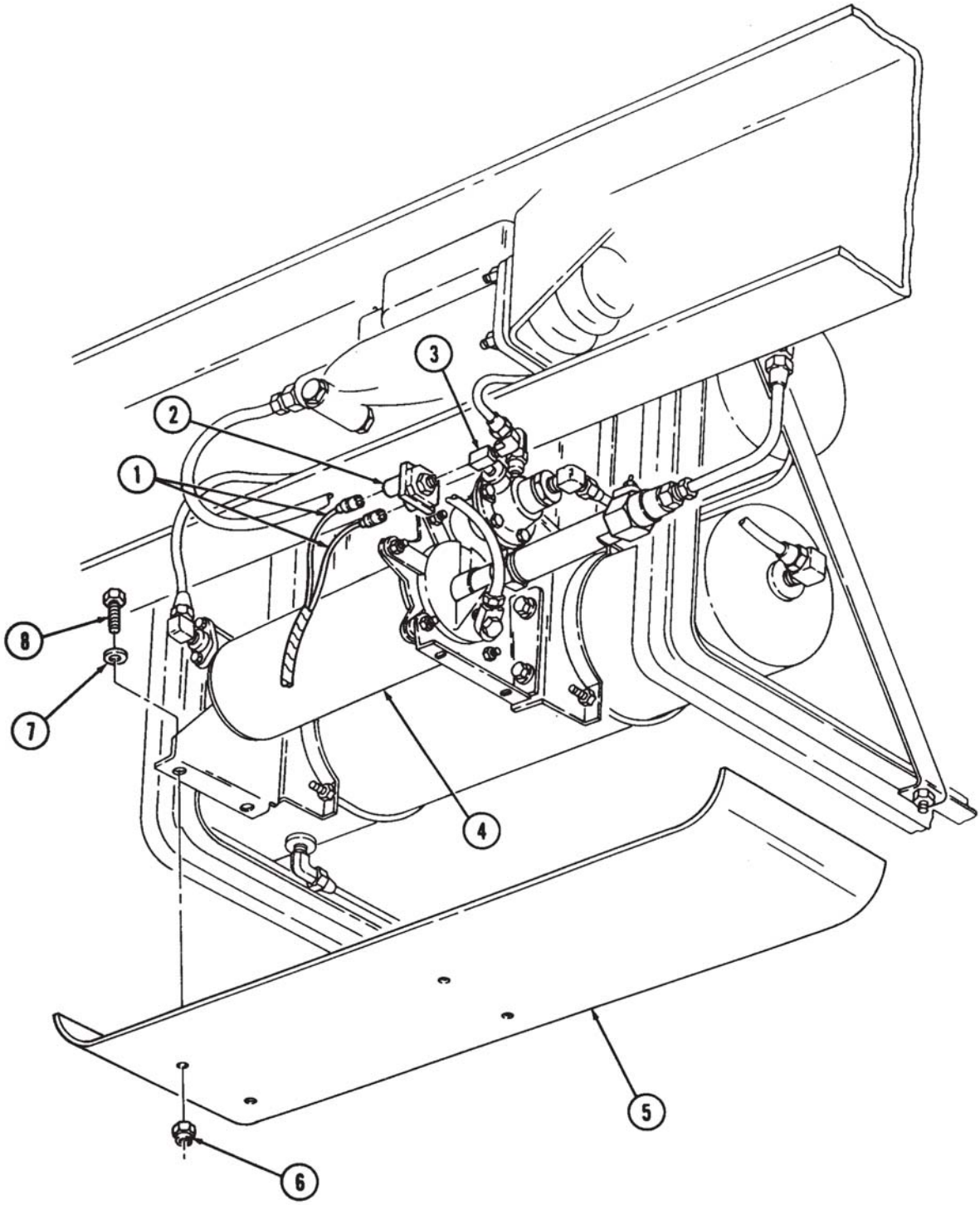

FOLLOW-ON TASKS:
- Connect battery ground cable (para. 4-48).
- Start engine (TM 9-2320-260-10), allow air pressure to build to normal operating level, and check for leaks.

4-26. LOW AIR PRESSURE INDICATOR SWITCH REPLACEMENT

THIS TASK COVERS:

a. Removal

b. Installation

INITIAL SETUP

APPLICABLE MODELS

All

MATERIALS/PARTS

Two lockwashers
Antiseize tape (Appendix C, Item 30)

REFERENCES (TM)

TM 9-2320-260-10
TM 9-2320-260-20P

EQUIPMENT CONDITION

- Parking brake set (TM 9-2320-260-10).
- Air reservoirs drained (TM 9-2320-260-10).

GENERAL SAFETY INSTRUCTIONS

Do not disconnect air lines before draining air reservoirs.

WARNING

Do not disconnect air lines before draining air reservoirs. Small parts under pressure may shoot out with high velocity, causing injury to personnel.

a. Removal

1. Disconnect leads (1) and (6) from switch (4).
2. Disconnect air line (7) from elbow (8).
3. Remove two screws (2), lockwashers (3), and switch (4) from firewall (5). Discard lockwashers (3).
4. Remove elbow (8) from switch (4).

b. Installation

1. Apply anti seize tape to male threads of elbow (8).
2. Install elbow (8) on switch (4).
3. Install switch (4) on firewall (5) with two new lockwashers (3) and screws (2).
4. Connect air line (7) on elbow (8).
5. Connect leads (1) and (6) to switch (4).

4-26. LOW AIR PRESSURE INDICATOR SWITCH REPLACEMENT (Contd)

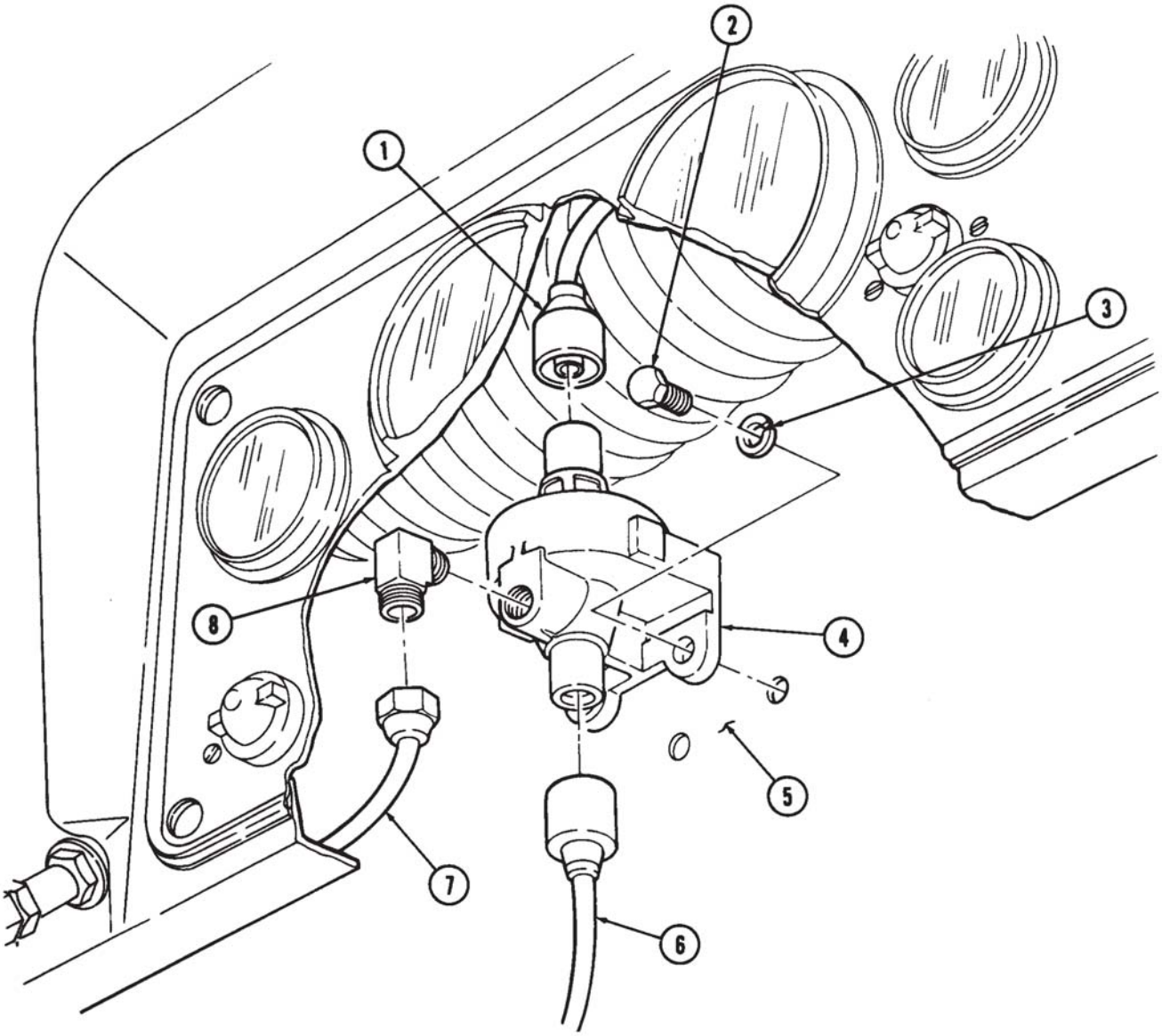

FOLLOW-ON TASK: Start engine (TM 9-2320-260-10), allow air pressure to build to normal operating level, and check for leaks.

4-27. BRAKE LOCK SWITCH REPLACEMENT

THIS TASK COVERS:

a. Removal **b. Installation**

INITIAL SETUP

APPLICABLE MODELS
M818, M819

MATERIALS/PARTS
Locknut
Antiseize tape (Appendix C, Item 30)

REFERENCES (TM)
TM 9-2320-260-10
TM 9-2320-260-20P

EQUIPMENT CONDITION
- Parking brake set (TM 9-2320-260-10).
- Air reservoirs drained (TM 9-2320-260-10).
- Battery ground cable disconnected (para. 4-48).

GENERAL SAFETY INSTRUCTIONS
Do not discomect air lines before draining air reservoirs.

WARNING

Do not disconnect air lines before draining air reservoirs. Small parta under pressure may shoot out with high velocity, causing injury to personnel.

a. Removal

1. Disconnect wire (6) from lead (7).
2. Disconnect two tubes (1) and (5) from switch (8).
3. Remove locknut (3), screw (4), and switch (8) from bracket (2). Discard locknut (3).

b. Installation

1. Apply antiseize tape to male threads of two tubes (1) and (5).
2. Install switch (8) on bracket (2) with screw (4) and new locknut (3).
3. Connect two tubes (1) and (5) to switch (8).
4. Connect wire (6) to lead (7).

4-27. BRAKE LOCK SWITCH REPLACEMENT (Contd)

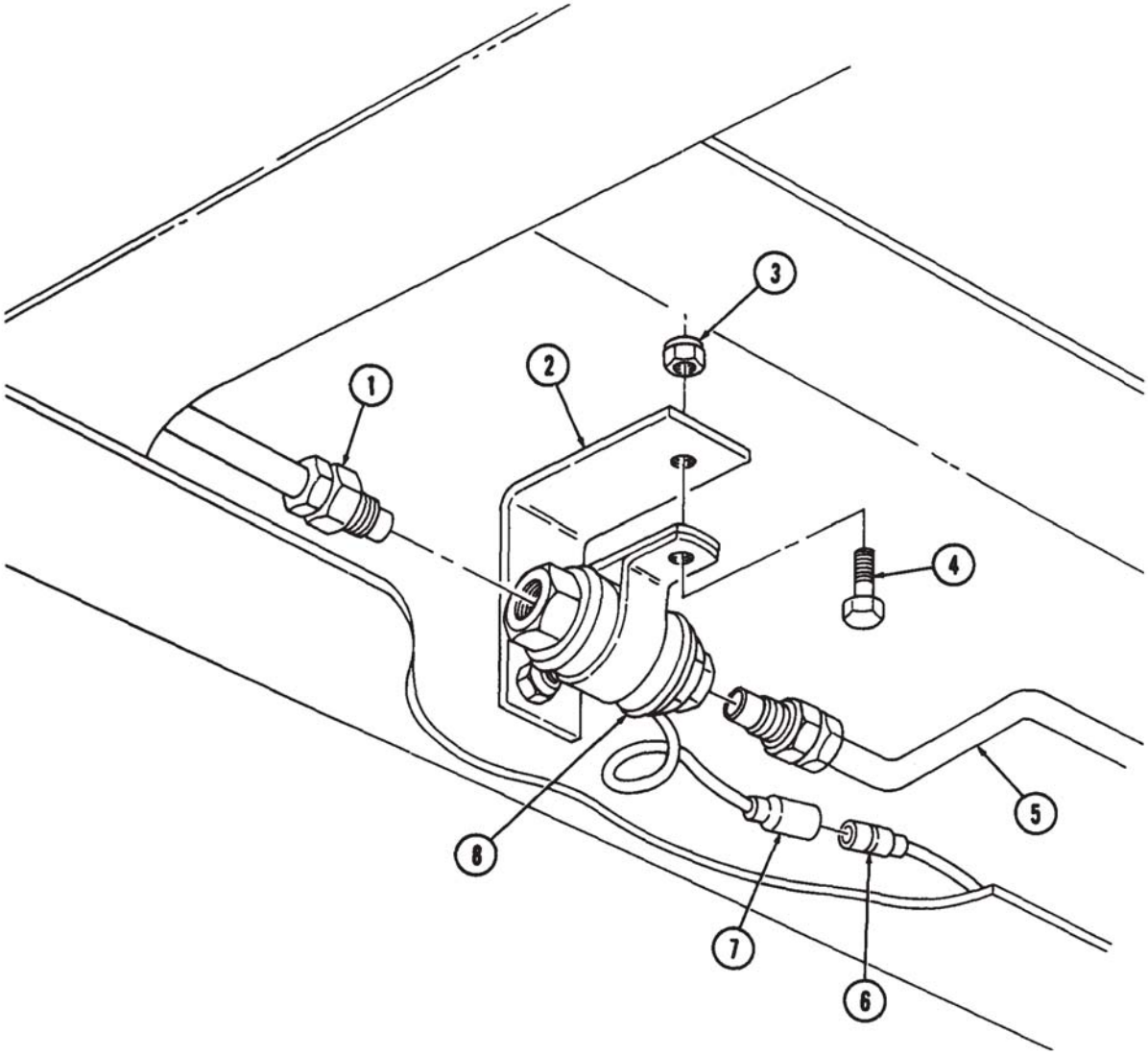

FOLLOW-ON TASKS: • Connect battery ground cable (para. 4-48).
• Start engine (TM 9-2320-260-10), allow air pressure to build to normal operating level, and check for leaks.

4-28. WATER TEMPERATURE SENDING UNIT REPLACEMENT

THIS TASK COVERS:

a. Removal **b. Installation**

INITIAL SETUP

APPLICABLE MODELS
All

MATERIALS/PARTS
Antiseize tape (Appendix C, Item 30)

REFERENCES (TM)
TM 9-2320-260-10
TM 9-2320-260-20P

EQUIPMENT CONDITION
- Parking brake set (TM 9-2320-260-10).
- Hood raised and secured (TM 9-2320-260-10).

a. Removal

1. Disconnect wire (3) from water temperature sending unit (2).
2. Remove water temperature sending unit (2) from engine water manifold (1).

b. Installation

1. Apply antiseize tape to male threads of water temperature sending unit (2).
2. Install water temperature sending unit (2) on engine water manifold (1).
3. Connect wire (3) to water temperature sending unit (2).

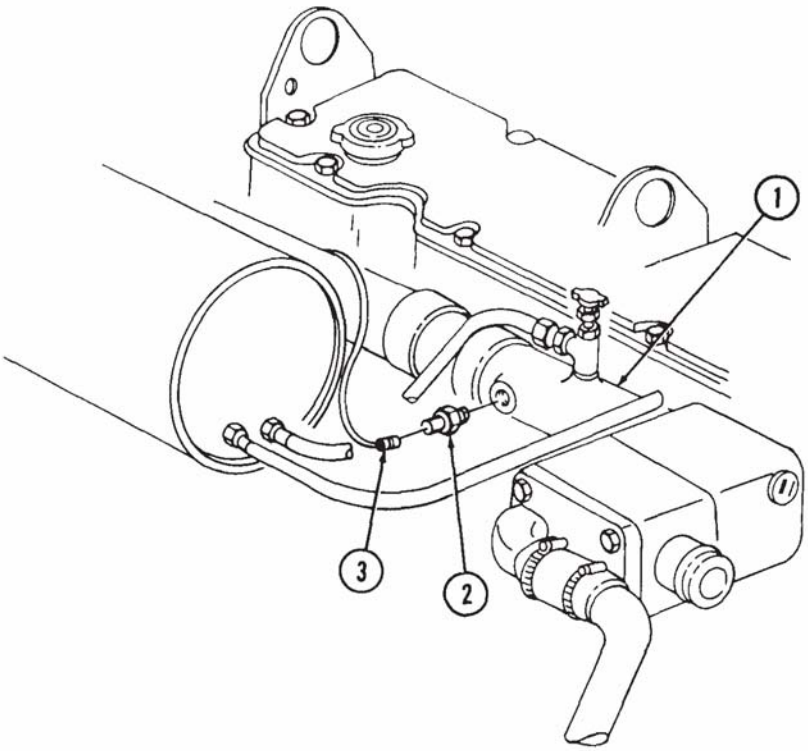

4-29. HORN SWITCH REPLACEMENT

THIS TASK COVERS:

a. Removal **b. Installation**

INITIAL SETUP

APPLICABLE MODELS
All

MATERIALS/PARTS
O-ring
Gasket

REFERENCES (TM)
TM 9-2320-260-10
TM 9-2320-260-20P

EQUIPMENT CONDITION
Parking brake set (TM 9-2320-260-10).

a. Removal

1. Remove three screws (5) and adapter (4) from steering wheel (1).
2. Disconnect wire (2) from horn switch connector (8).
3. Remove spring (10) and gasket (3) from steering wheel (1). Discard gasket (3).
4. Remove retaining ring (7), horn switch (6), and O-ring (9) from adapter (4). Discard O-ring (9).

b. Installation

1. Install new O-ring (9), horn switch (6), and retaining ring (7) in adapter (4).
2. Install new gasket (3) and spring (10) on steering wheel (1).
3. Connect wire (2) to horn switch connector (8).
4. Install adapter (4) on steering wheel (1) with three screws (5).

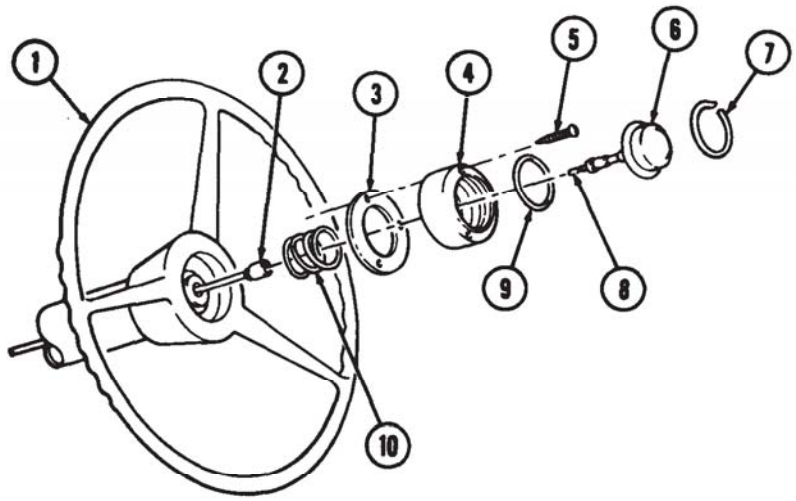

4-30. HORN, SOLENOID, AND BRACKET REPLACEMENT

THIS TASK COVERS:

a. Removal **b. Installation**

INITIAL SETUP

APPLICABLE MODELS

All

MATERIALS/PARTS

Two lockwashers
Antiseize tape (Appendix C, Item 30)

REFERENCES (TM)

TM 9-2320-260-10
TM 9-2320-260-20P

EQUIPMENT CONDITION

- Parking brake set (TM 9-2320-260-10).
- Hood raised and secured (TM 9-2320-260-10).
- Air reservoirs drained (TM 9-2320-260-10).
- Battery ground cable disconnected (para. 4-48).

GENERAL SAFETY INSTRUCTIONS

Do not disconnect air lines before draining air reservoirs.

a. Removal

1. Disconnect two wires (2) from solenoid (7).

WARNING

Do not disconnect air lines before draining air reservoirs. Small parts under pressure may shoot out with high velocity, causing injury to personnel.

2. Disconnect air line (1) from elbow (6).
3. Remove elbow (6) from horn solenoid (7).
4. Remove horn solenoid (7) from horn (8).
5. Remove two nuts (5), screws (9), and horn (8) from horn bracket (3).

NOTE

Assistant will help with step 6.

6. Remove two nuts (12), lockwashers (11), screws (4), and horn bracket (3) from firewall (10). Discard lockwashers (11).

b. Installation

1. Apply antiseize tape to male threads of elbow (6).
2. Position horn bracket (3) on firewall (10) and install with two screws (4), new lockwashers (11), and nuts (12).
3. Install horn (8) on horn bracket (3) with two screws (9) and nuts (5).
4. Install horn solenoid (7) on horn (8).
5. Install elbow (6) on horn solenoid (7).
6. Install air line (1) on elbow (6).
7. Connect two wires (2) to solenoid (7).

4-30. HORN, SOLENOID, AND BRACKET REPLACEMENT (Contd)

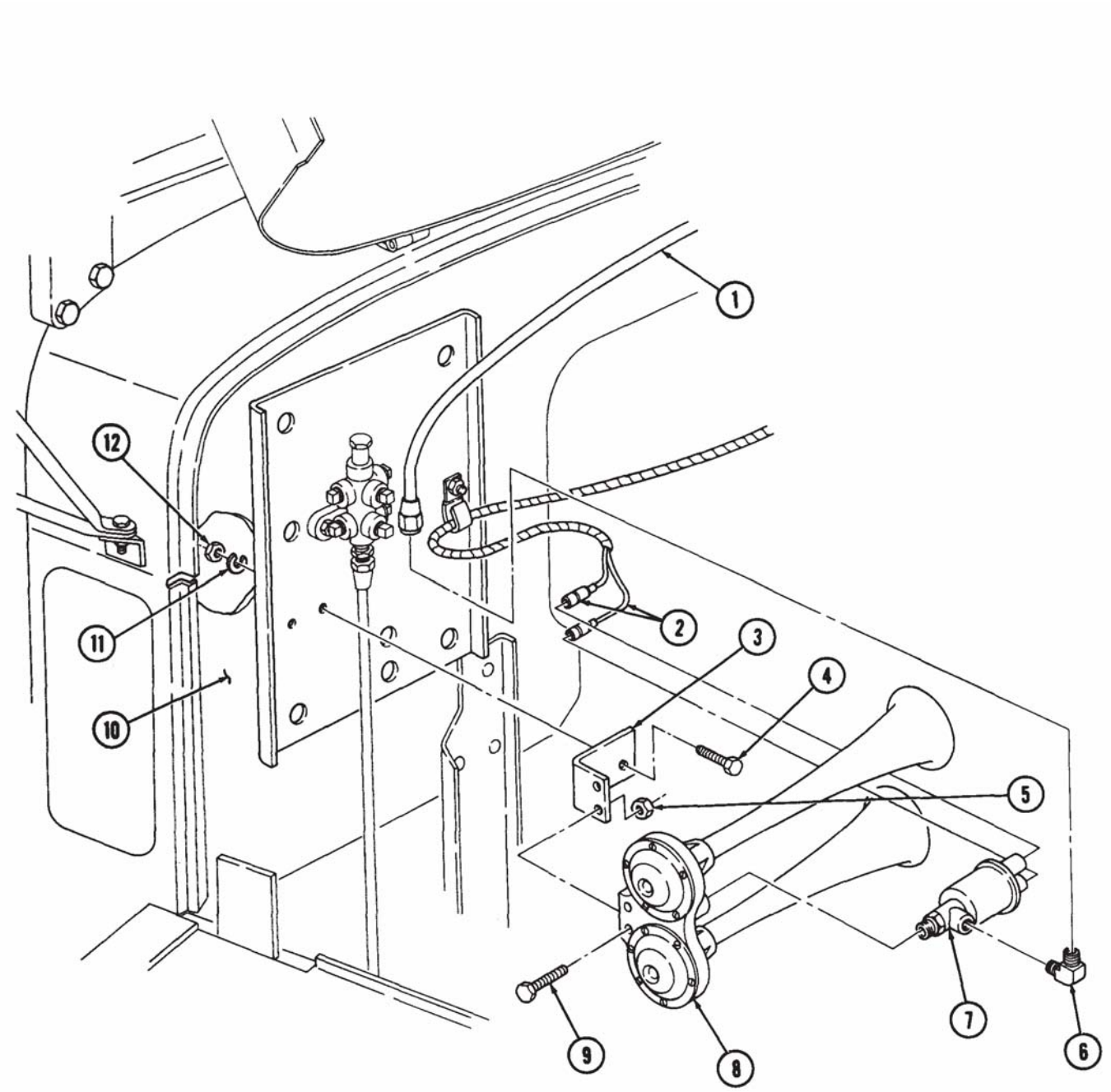

FOLLOW-ON TASKS: • Connect battery ground cable (para. 4-48).
• Start engine (TM 9-2320-260-10), allow air pressure to build to normal operating level, and check for leaks.

4-31. HORN CONTACT BRUSH REPLACEMENT

THIS TASK COVERS:

a. Removal **b. Installation**

INITIAL SETUP

APPLICABLE MODELS
All

MATERIALS/PARTS
Seven lockwashers
Gasket

REFERENCES (TM)
TM 9-2320-260-10
TM 9-2320-260-20P

EQUIPMENT CONDITION
- Parking brake set (TM 9-2320-260-10).
- Hood raised and secured (TM 9-2320-260-10).
- Battery ground cable disconnected (para. 4-48).

a. Removal

1. Disconnect wire (1) from boot (22).

NOTE

Assistant will help with step 2.

2. Remove nut (4), lockwasher (5), and screw (11) from bracket (6) and firewall (12). Discard lockwasher (5).
3. Remove four screws (2), lockwashers (3), and bracket (6), and raise brush cover (21) from steering column (13). Discard lockwashers (3).
4. Remove screw (7), locktab (18), and wire (8) from contact brush (15).
5. Remove brush cover (21) and gasket (16) from steering column (13). Discard gasket (16).
6. Remove two screws (9), lockwashers (10), contact brush (15), and spacer (14) from steering column (13). Discard lockwashers (10).
7. Remove nut (24), washer (23), boot (22), terminal (17), wire (8), and washers (19) and (20) from brush cover (21).

b. Installation

1. Install washers (19) and (20), wire (8), terminal (17), boot (22), washer (23), and nut (24) on brush cover (21).
2. Install spacer (14) and contact brush (15) on steering column (13) with two new lockwashers (10) and screws (9).
3. Position new gasket (16) on steering column (13).
4. Install wire (8) on contact brush (15) with locktab (18) and screw (7).
5. Position brush cover (21) on steering column (13) and install with three new lockwashers (3) and screws (2).
6. Install bracket (6) on brush cover (21) with new lockwasher (3) and screw (2).

NOTE

Assistant will help with step 7.

7. Install bracket (6) on firewall (12) with screw (11), new lockwasher (5), and nut (4).
8. Connect wire (1) to boot (22).

4-31. HORN CONTACT BRUSH REPLACEMENT (Contd)

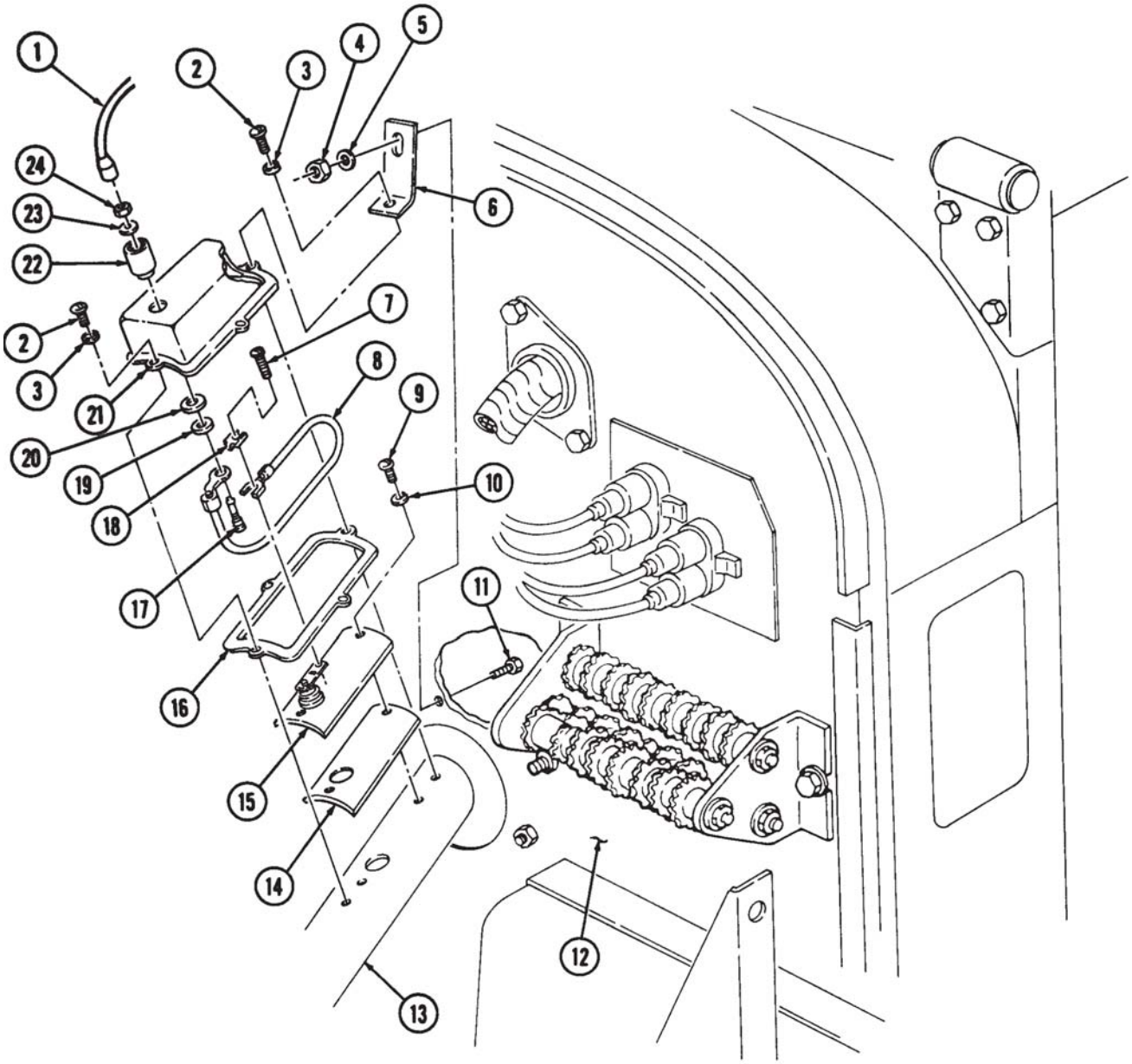

FOLLOW-ON TASK: Connect battery sound cable (para. 4-48).

4-32. TURN SIGNAL FLASHER REPLACEMENT

THIS TASK COVERS:

a. Removal **b. Installation**

INITIAL SETUP

APPLICABLE MODELS
All

MATERIALS/PARTS
Two lockwashers

REFERENCES (TM)
TM 9-2320-260-10
TM 9-2320-260-20P

EQUIPMENT CONDITION
- Parking brake set (TM 9-2320-260-10).
- Hood raised and secured (TM 9-2320-260-10).
- Battery ground cable disconnected (para. 4-48).

a. Removal

1. Disconnect harness (3) from turn signal flasher (2).
2. Remove two screws (5), lockwashers (6), ground lead (4), and turn signal flasher (2) from mounting flasher (1). Discard lockwashers (6).

b. Installation

1. Install turn signal flasher (2) and ground lead (4) on mounting bracket (1) with two new lockwashers (6) and screws (5).
2. Connect harness (3) to turn signal flasher (2).

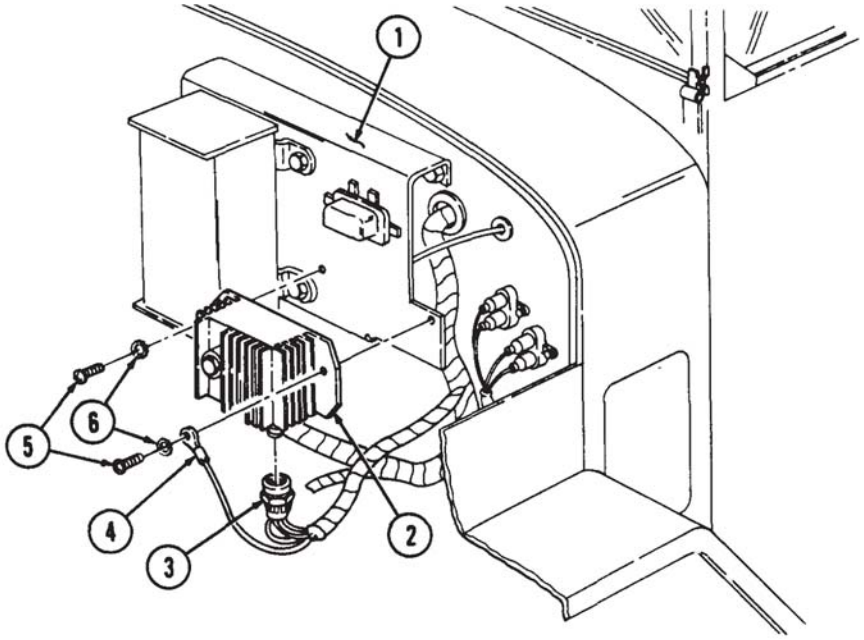

FOLLOW-ON TASKS:
- Connect battery ground cable (para 4-48).
- Check turn signal flasher for proper operation (TM 9-2320-260-10).

4-33. TURN SIGNAL CONTROL AND INDICATOR LAMP REPLACEMENT

THIS TASK COVERS:

a. Removal **b. Installation**

INITIAL SETUP

APPLICABLE MODELS
All

REFERENCES (TM)
TM 9-2320-260-10
TM 9-2320-260-20P

EQUIPMENT CONDITION
- Parking brake set (TM 9-2320-260-10).
- Battery ground cable disconnected (para. 4-48).

NOTE

For indicator lamp replacement, perform Removal step 1 and Installation step 3 only.

a. Removal

1. Remove cable connector (5) from turn signal control (4).
2. Remove clamp (2) and turn signal control (4) from steering column (3).
3. Remove lamp lens (1) and lamp (6) from turn signal control (4).

b. Installation

1. Install lamp (6) and lamp lens (1) on turn signal control (4).
2. Position turn signal control (4) to steering column (3) and install with clamp (2).
3. Connect cable connector (5) to turn signal control (4).

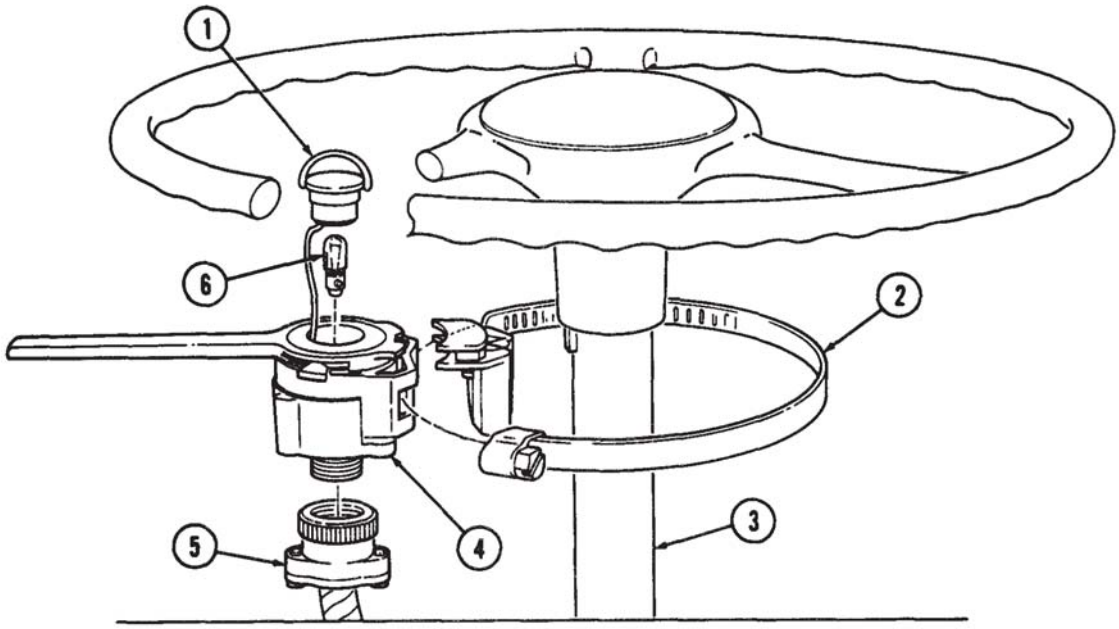

FOLLOW-ON TASKS: • Connect battery ground cable (para. 4-48).
• Check turn signal control for proper operation (TM 9-2320-260-10).

4-34. WARNING SIGNAL LIGHT FLASHER REPLACEMENT

THIS TASK COVERS:

a. Removal **b. Installation**

INITIAL SETUP

APPLICABLE MODELS
M818, M819

MATERIALS/PARTS
Two locknuts

REFERENCES (TM)
TM 9-2320-260-10
TM 9-2320-260-20P

EQUIPMENT CONDITION
- Parking brake set (TM 9-2320-260-10).
- Battery ground cable disconnected (para. 4-48).

a. Removal

1. Disconnect harness (2) from signal lamp flasher (1).
2. Remove two locknuts (3), screws (5), and signal lamp flasher (1) from panel brace (4). Discard locknuts (3).

b. Installation

1. Install signal lamp flasher (1) on panel brace (4) with two screws (5) and new locknuts (3).
2. Connect harness (2) to signal lamp flasher (1).

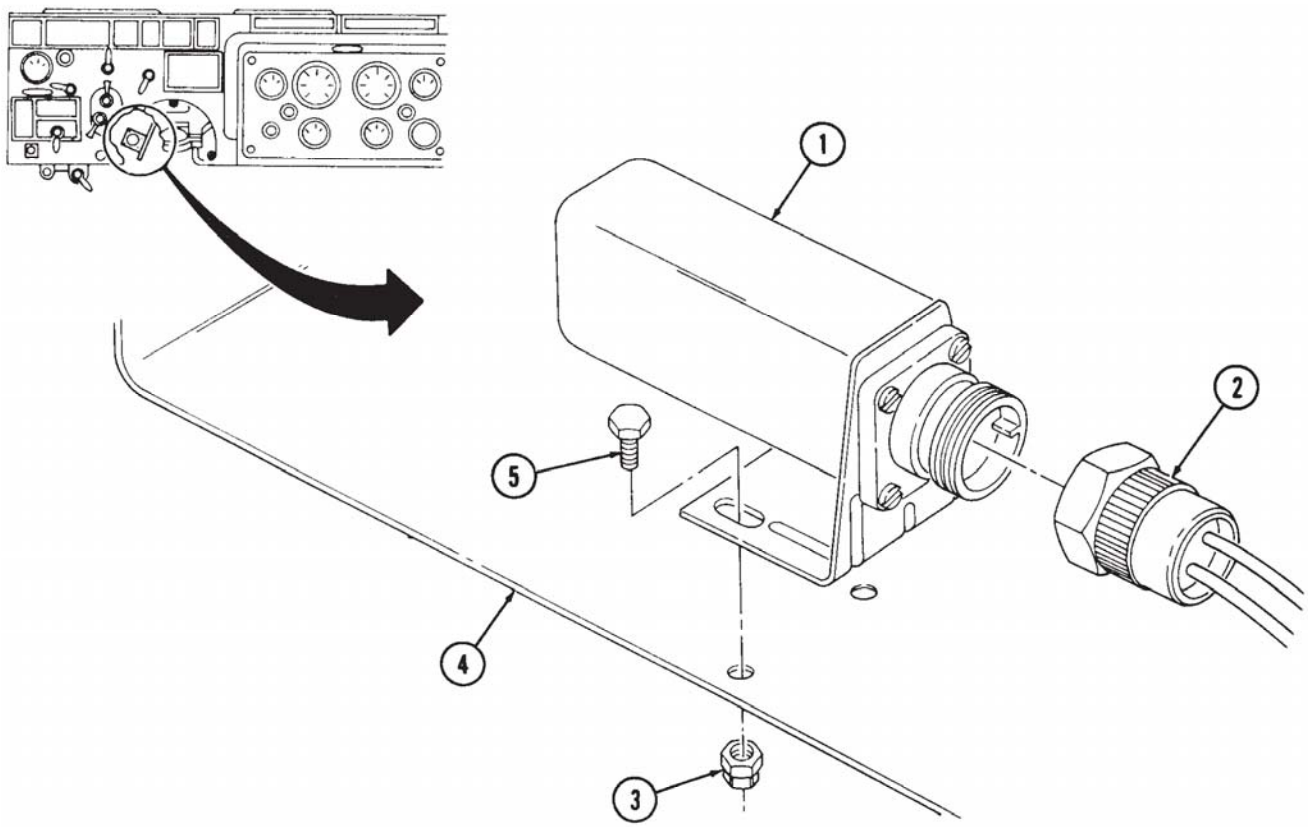

FOLLOW-ON TASK: Connect battery ground cable (para. 4-48).

4-35. HEADLIGHT HIGH BEAM SELECTOR SWITCH REPLACEMENT

THIS TASK COVERS:

a. Removal **b. Installation**

INITIAL SETUP

APPLICABLE MODELS
All

MATERIALS/PARTS
Two lockwashers

REFERENCES (TM)
TM 9-2320-260-10
TM 9-2320-260-20P

EQUIPMENT CONDITION
- Parking brake set (TM 9-2320-260-10).
- Battery ground cable disconnected (para. 4-48).

a. Removal

1. Remove two screws (1) and lockwashers (2), and push selector switch (5) through cab floor (3). Discard lockwashers (2).

NOTE

Tag all wires for installation.

2. Disconnect three wires (4) from selector switch (5).

b. Installation

1. Connect three wires (4) to selector switch (5).

NOTE

Assistant will help with step 2.

2. Position selector switch (5) on cab floor (3) and install with two new lockwashers (2) and screws (1).

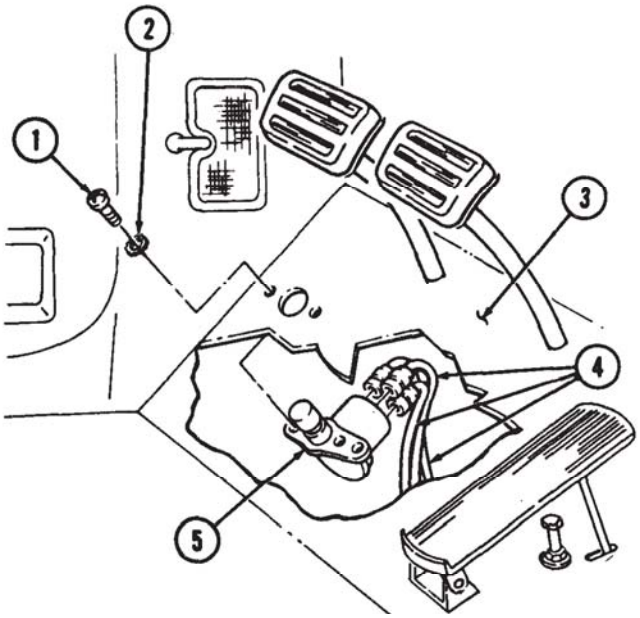

FOLLOW-ON TASK: Connect battery ground cable (para. 4-48).

4-36. PROTECTIVE CONTROL BOX AND BRACKET REPLACEMENT

THIS TASK COVERS:

a. Removal **b. Installation**

INITIAL SETUP

APPLICABLE MODELS
All

MATERIALS/PARTS
Nine lockwashers

REFERENCES (TM)
TM 9-2320-260-10
TM 9-2320-260-20P

EQUIPMENT CONDITION
- Parking brake set (TM 9-2320-260-10).
- Hood raised and secured (TM 9-2320-260-10).
- Turn signal flasher removed (para. 4-32).
- Cold start relay removed (para. 3-34).

a. Removal

1. Disconnect harness (5) from protective control box (12).
2. Remove screw (8), lockwasher (7), ground lead (6), and lockwasher (9) from protective control box (12) and mounting bracket (3). Discard lockwashers (7) and (9).
3. Remove three screws (10), lockwashers (11), and protective control box (12) from mounting bracket (3). Discard lockwashers (11).
4. Remove four screws (1), lockwashers (2), and bracket (3) from firewall (4). Discard lockwashers (2).

b. Installation

1. Install mounting bracket (3) on firewall (4) with four new lockwashers (2) and screws (1).
2. Install protective control box (12) on mounting bracket (3) with three new lockwashers (11) and screws (10).
3. Install new lockwasher (9), ground lead (6), new lockwasher (7), and screw (8) on protective control box (12).
4. Connect harness (5) to protective control box (12).

4-36. PROTECTIVE CONTROL BOX AND BRACKET REPLACEMENT (Contd)

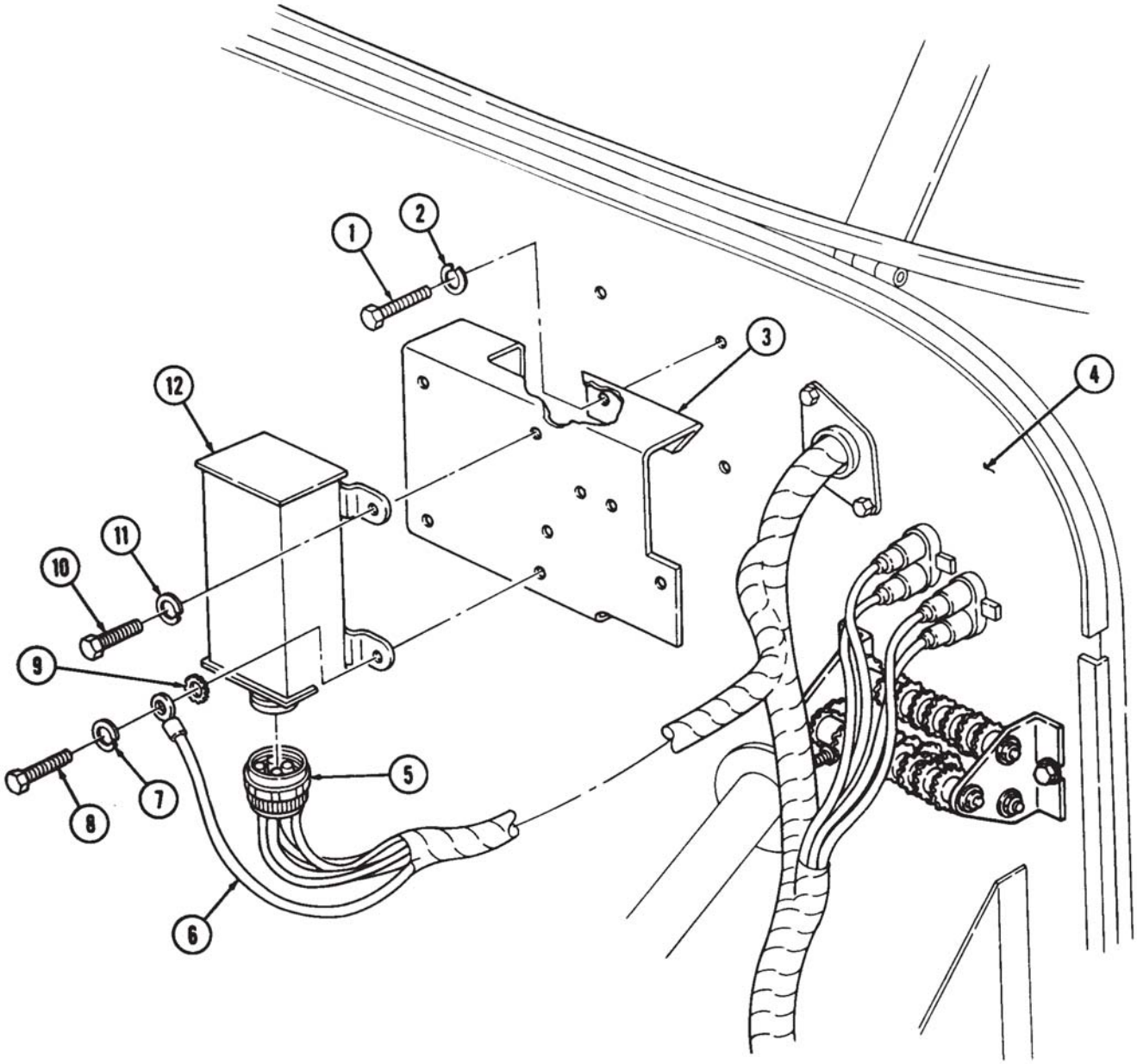

FOLLOW-ON TASKS: • Install cold start relay (para. 3-34).
• Install turn signal flasher (para. 4-32).

Section IV. LIGHTING SYSTEM MAINTENANCE

4-37. LIGHTING SYSTEM MAINTENANCE INDEX

PARA. NO.	TITLE	PAGE NO.
4-38.	Headlight Housing and Sealed Beam Lamp Maintenance	4-66
4-39.	Warning Signal Lamp, Housing, and Bracket Replacement	4-70
4-40.	Front Composite Lamps, Housing, and Bracket Replacement	4-72
4-41.	Blackout Drive Lamp and Housing Replacement	4-74
4-42.	Floodlight Lamp Replacement	4-76
4-43.	Floodlight Housing and Mount Replacement	4-77
4-44.	Side Marker and Clearance Light Replacement	4-80
4-45.	Rear Composite Light Housing and Bracket Replacement	4-82
4-46.	Rear Composite Light Lamp Replacement	4-89

4-38. HEADLIGHT HOUSING AND SEALED BEAM LAMP MAINTENANCE

THIS TASK COVERS:

a. Sealed Beam Lamp Removal
b. Headlight Housing Removal
c. Headlight Housing Installation
d. Sealed Beam Lamp Installation
e. Alinement

INITIAL SETUP

APPLICABLE MODELS
All

MATERIALS/PARTS
Three lockwashers
Chalk (Appendix C, Item 10)

REFERENCES (TM)
TM 9-2320-260-10
TM 9-2320-260-20P

EQUIPMENT CONDITION
- Parking brake set (TM 9-2320-260-10).
- Battery ground cable disconnected (para. 4-48).

a. Sealed Beam Lamp Removal

1. Remove three screws (1) and retaining ring (2) from headlight housing ring (4).

NOTE

Tag all wires for installation.

2. Disconnect three wires (3) from three connectors (5) on rear of headlight housing (4) and remove sealed beam lamp (10).

b. Headlight Housing Removal

1. Disconnect three wires (9) from three connectors (5) on rear of headlight housing (4).
2. Remove three nuts (8), lockwashers (6), and headlight housing (4) from body (7). Discard lockwashers (6).

4-38. HEADLIGHT HOUSING AND SEALED BEAM LAMP MAINTENANCE (Contd)

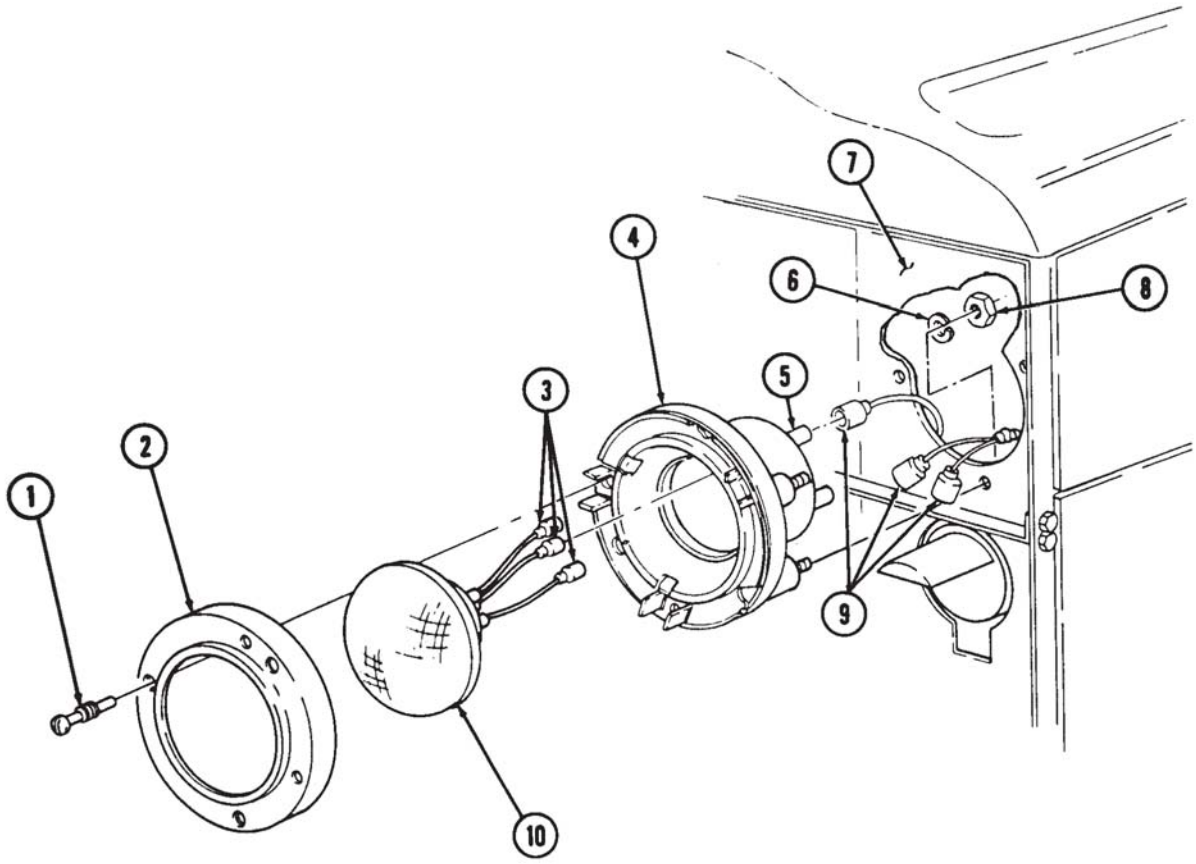

4-38. HEADLIGHT HOUSING AND SEALED BEAM LAMP MAINTENANCE (Contd)

c. Headlight Housing Installation

1. Install headlight housing (4) on body (7) with three new lockwashers (6) and nuts (8).
2. Connect three wires (9) to connectors (5) on rear of headlight housing (4).

d. Sealed Beam Lamp Installation

1. Connect three wires (3) to connectors (5) on rear of headlight housing (4).
2. Install sealed beam lamp (10) in headlight housing ring (4) with retaining ring (2) and three retaining screws (1).

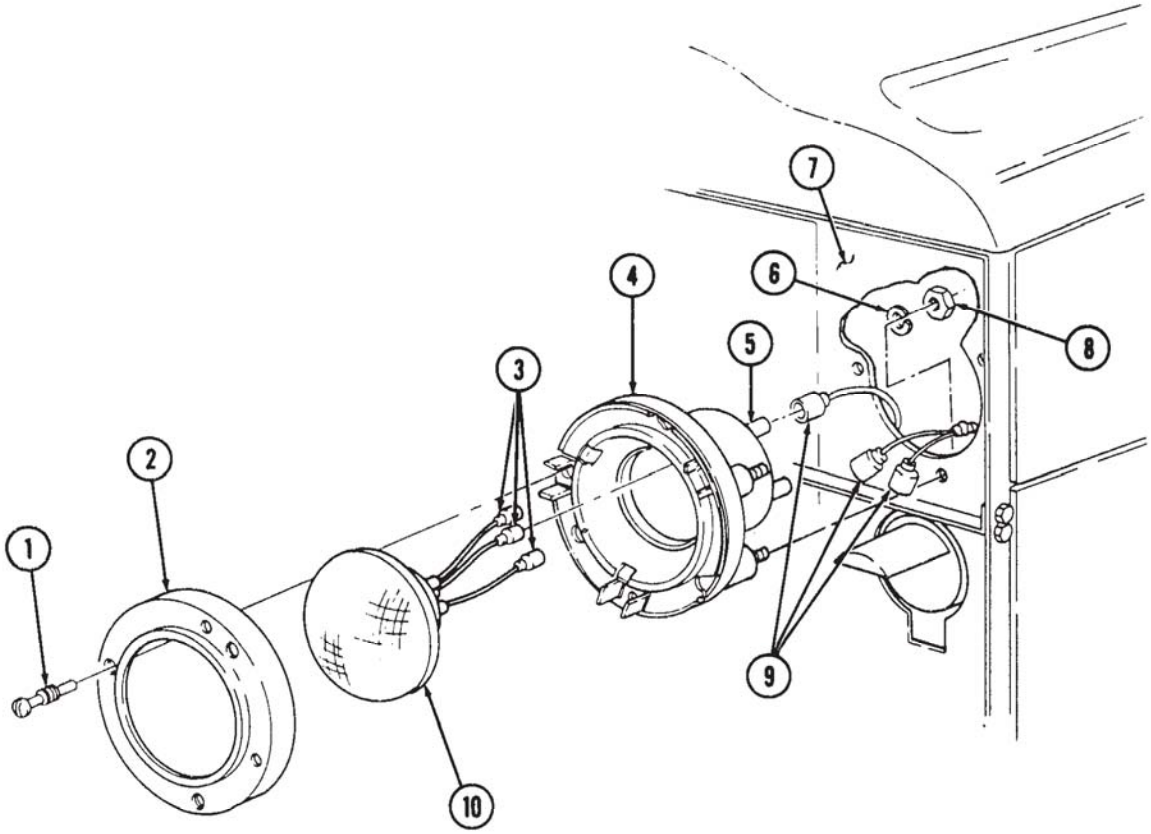

4-38. HEADLIGHT HOUSING AND SEALED BEAM LAMP MAINTENANCE (Contd)

e. Alinement

1. Connect battery ground cable.
2. Draw a horizontal line (22) on a wall the height of center of headlight (25).
3. Park truck facing wall so headlights (25) are 25 ft (762 cm) from wall.
4. Draw a vertical line (20) through horizontal line (22) so it is in line with center of headlight (25).
5. Turn headlights on low beam (TM 9-2320-260-10).
6. Adjust headlight horizontal direction with adjusting screw (24) until left edge of bright light area (21) on wall is 2-6 in. (5.08-15.24 cm) right of vertical line (20).
7. Adjust headlight vertical direction with adjusting screw (23) until top edge of bright light area (21) on wall is touching lower side of horizontal line (22).
8. Adjust other headlight using same procedure.

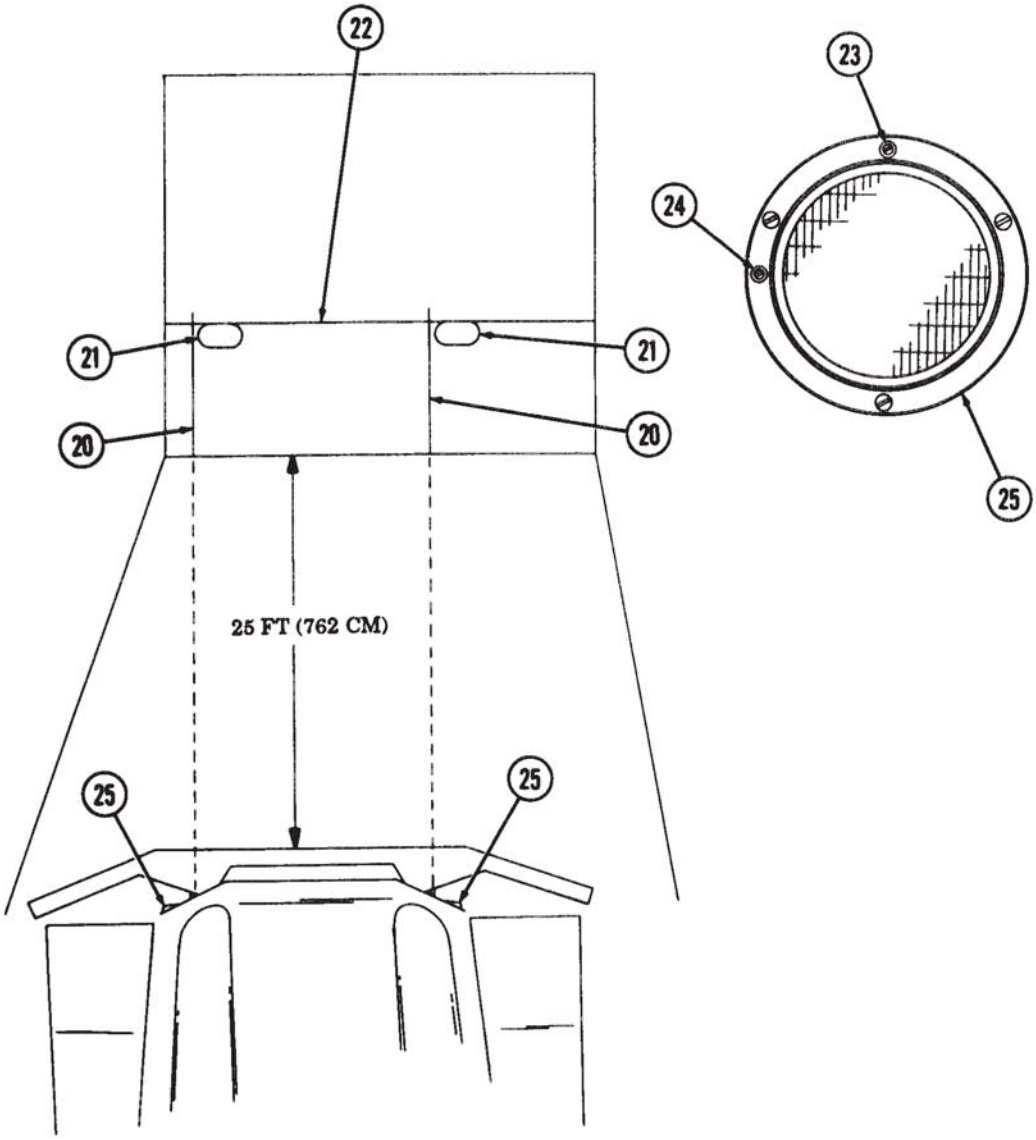

4-39. WARNING SIGNAL LAMP, HOUSING, AND BRACKET REPLACEMENT

THIS TASK COVERS:

a. Signal Lamp Removal
b. Signal Light Housing Removal
c. Signal Light Housing Installation
d. Signal Lamp Installation

INITIAL SETUP

APPLICABLE MODELS

M816, M819

MATERIALS/PARTS

Four locknuts
Lockwasher

REFERENCES (TM)

TM 9-2320-260-10
TM 9-2320-260-20P

EQUIPMENT CONDITION

- Parking brake set (TM 9-2320-260-10).
- Battery ground cable disconnected (para. 4-48).

GENERAL SAFETY INSTRUCTIONS

Eye protection must, be worn when removing or installing springs under tension.

a. Signal Lamp Removal

1. Remove three screws (17) and retaining ring (1) from lamp housing (6).
2. Disconnect wires (4) and (5) from lamp housing (6).

WARNING

Eye protection must be worn when removing or installing springs under tension. Failure to do so may result in injury to personnel.

3. Remove three springs (3) and lamp (2) from retaining ring (1).

b. Signal Light Housing Removal

1. Disconnect wire (7) from lamp housing (6).
2. Remove nut (14), lockwasher (15), mounting washer (16), and lamp housing (6) from bracket (12). Discard lockwasher (15).
3. Remove four locknuts (9), screws (13), bracket (12), and protector box (10) from fender (11). Discard locknuts (9).
4. Remove grommet (8) and wire (7) from fender (11).

c. Signal Light Housing Installation

1. Insert wire (7) through hole in fender (11).
2. Place grommet (8) around wire (7) and install on fender (11).
3. Position bracket (12) and protector box (10) on fender (11) and install with four screws (13) and new locknuts (9).
4. Install lamp housing (6) on bracket (12) with mounting washer (16), new lockwasher (15), and nut (14).
5. Connect wire (7) to lamp housing (6).

4-39. WARNING SIGNAL LAMP, HOUSING, AND BRACKET REPLACEMENT (Contd)

d. Signal Lamp Installation

1. Install lamp (2) in retaining ring (1) with three springs (3).
2. Connect wires (4) and (5) to lamp housing (6).
3. Install retaining ring (1) on lamp housing (6) with three screws (17).

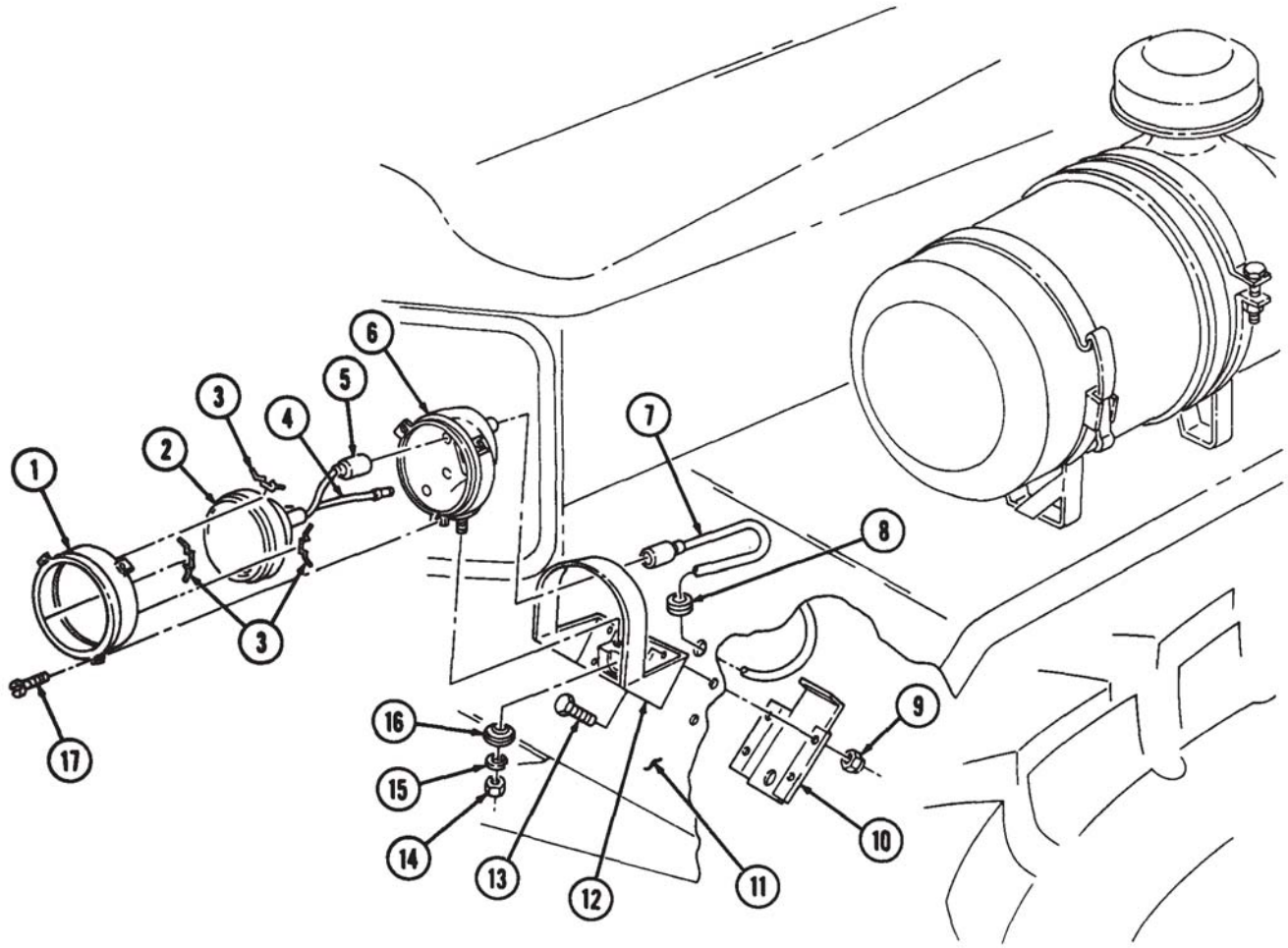

FOLLOW-ON TASK: Connect battery ground cable (para. 4-48).

4-40. FRONT COMPOSITE LAMPS, HOUSING, AND BRACKET REPLACEMENT

THIS TASK COVERS:

a. Composite Lamps Removal
b. Composite Light Housing Removal
c. Composite Light Housing Installation
d. Composite Lamps Installation

INITIAL SETUP

APPLICABLE MODELS
All

MATERIALS/PARTS
Two lockwashers
Four locknuts

REFERENCES (TM)
TM 9-2320-260-10
TM 9-2320-260-20P

EQUIPMENT CONDITION
- Parking brake set (TM 9-2320-260-10).
- Battery ground cable disconnected (para. 4-48).

a. Composite Lamps Removal

1. Loosen five screws (1) and remove lens cover (15) and gasket (14) from composite light housing (3).
2. Remove lamp(s) (2) from composite light housing (3).

b. Composite Light Housing Removal

1. Remove four screws (13), locknuts (10), and cover (9) from fender (11) and bracket (12). Discard locknuts (10).
2. Remove two screws (7) and lockwashers (6) from composite light housing (3) and bracket (12). Remove bracket (12). Discard lockwashers (6).

NOTE

Tag all wires for installation.

3. Disconnect three wires (4) from wiring harness connectors (5) and remove composite light housing (3).
4. Remove two grommets (8) from bracket (12) and cover (9).

c. Composite Light Housing Installation

1. Connect three wires (4) to wiring harness connectors (5).
2. Place two grommets (8) around three wires (5) and install on fender (11) and bracket (12).
3. Install composite light housing (3) on bracket (12) with two new lockwashers (6) and screws (7).
4. Install bracket (12) and cover (9) on fender (11) with four screws (13) and new locknuts (10).

d. Composite Lamps Installation

1. Install lamp(s) (2) in composite light housing (3).
2. Install gasket (14) and lens cover (15) and tighten five screws (1).

4-40. FRONT COMPOSITE LAMPS, HOUSING, AND BRACKET REPLACEMENT (Contd)

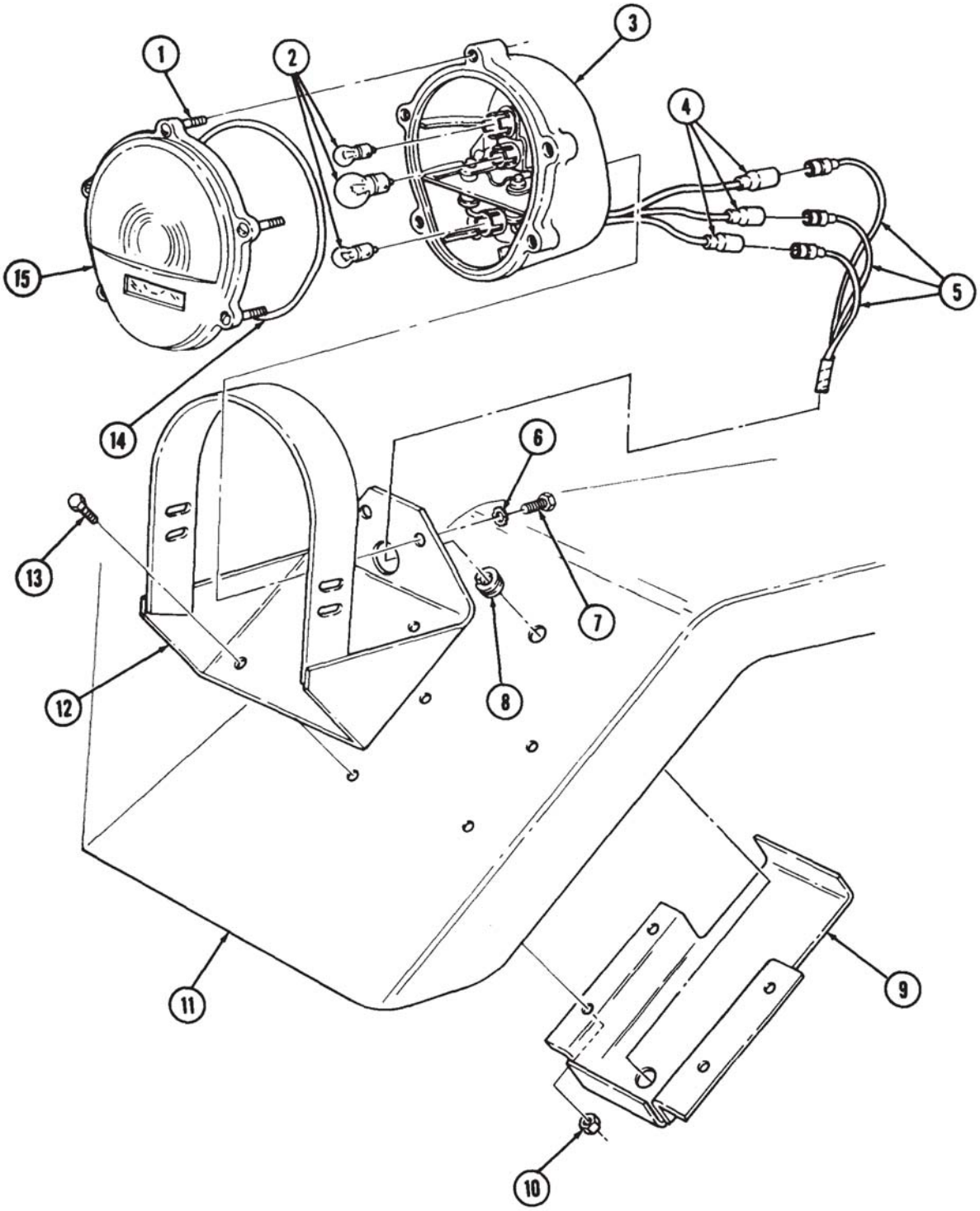

FOLLOW-ON TASKS:
- Connect battery ground cable (para. 4-48).
- Check operation of front composite light (TM 9-2320-260-10).

4-41. BLACKOUT DRIVE LAMP AND HOUSING REPLACEMENT

THIS TASK COVERS:

a. Blackout Drive Lamp Removal
b. Blackout Drive Light Housing Removal
c. Blackout Drive Light Housing Installation
d. Blackout Drive Lamp Installation

INITIAL SETUP

APPLICABLE MODELS
All

MATERIALS/PARTS
Two lockwashers
Four locknuts
Three O-rings
Gasket

REFERENCES (TM)
TM 9-2320-260-10
TM 9-2320-260-20P

EQUIPMENT CONDITION
- Parking brake set (TM 9-2320-260-10).
- Battery ground cable disconnected (para. 4-48).

a. Blackout Drive Lamp Removal

1. Remove three screws (14), lens cover (15), three O-rings (13), and gasket (12) from housing (1). Discard O-rings (13) and gasket (12).
2. Remove lamp (16) from housing (1).

b. Blackout Drive Light Housing Removal

NOTE

Tag all wires for installation.

1. Disconnect wire (3) from connector plug (2).
2. Remove nut (10), lockwasher (9), mounting washer (8), housing (1), and lockwasher (11) from bracket (6). Discard lockwashers (9) and (11).
3. Remove four locknuts (7), screws (4), and mounting bracket (6) from headlight bracket (5). Discard locknuts (7).

c. Blackout Drive Light Housing Installation

1. Install mounting bracket (6) on headlight bracket (5) with four screws (4) and new locknuts (7).
2. Install housing (1) to mounting bracket (6) with new lockwasher (11), mounting washer (8), new lockwasher (9), and nut (10).
3. Connect wire (3) to connector plug (2).

d. Blackout Drive Lamp Installation

1. Install lamp (16) in housing (1).
2. Install new gasket (12), three new O-rings (13), and lens cover (15) on housing (1) with three screws (14).

4-41. BLACKOUT DRIVE LAMP AND HOUSING REPLACEMENT (Contd)

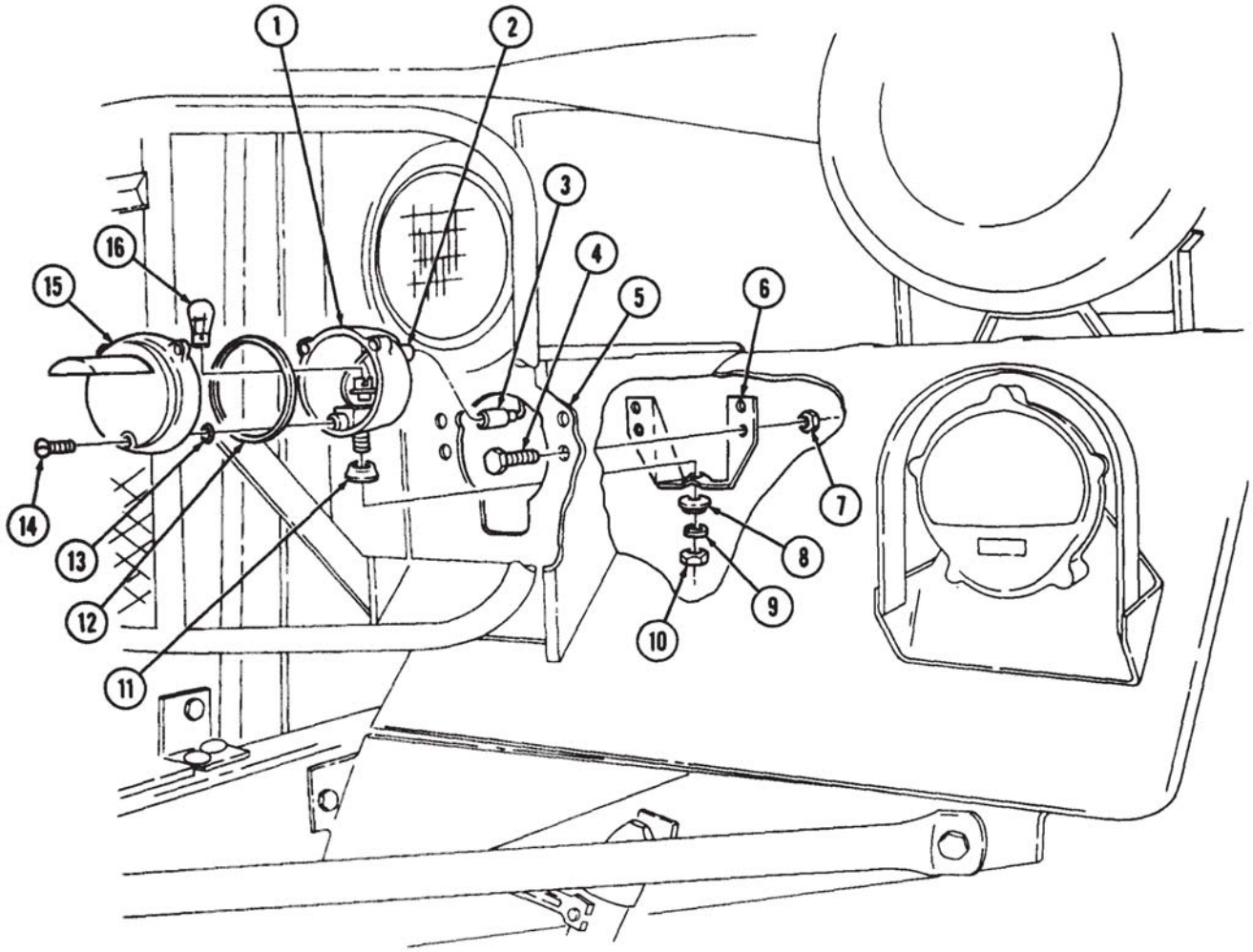

FOLLOW-ON TASK. Connect battery ground cable (para. 4-48).

4-42. FLOODLIGHT LAMP REPLACEMENT

THIS TASK COVERS:

a. Lamp Removal **b. Lamp Installation**

INITIAL SETUP

APPLICABLE MODELS
M816, M819

MATERIALS/PARTS
Two screw-assembled lockwashers
Three O-rings

REFERENCES (TM)
TM 9-2320-260-10
TM 9-2320-260-20P

EQUIPMENT CONDITION
- Parking brake set (TM 9-2320-260-10).
- Battery ground cable disconnected (para. 4-48).

a. Lamp Removal

1. Remove three screws (1), retaining ring (2), and three O-rings (3) from housing (7). Discard o-rings (3).

NOTE

Tag all wires for installation.

2. Remove four springs (10) and lamp (4) from retaining ring (2).
3. Remove screw-assembled lockwashers (6) and (8) and wires (5) and (9) from lamp (4). Discard screw-assembled lockwashers (6) and (8).

b. Lamp Installation

1. Install lamp (4) on retaining ring (2) with four springs (10).
2. Install wires (5) and (9) on lamp (4) with new screw-assembled lockwashers (6) and (8).
3. Install three new O-rings (3) and retaining ring (2) on housing (7) with three screws (1).

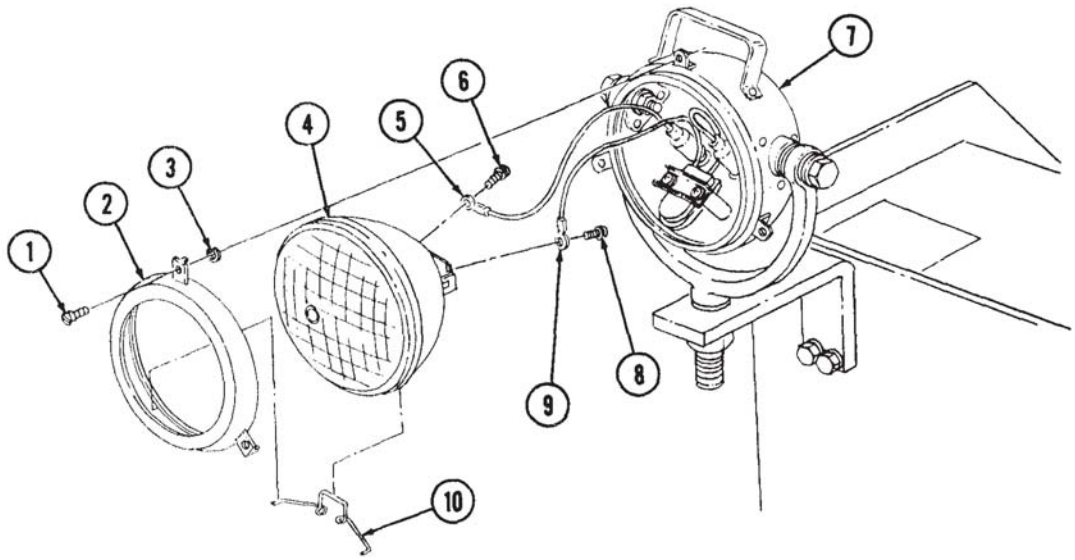

FOLLOW-ON TASKS:
- Connect battery ground cable (para. 4-48).
- Check operation of floodlamp (TM 9-2320-260-10).

4-43. FLOODLIGHT HOUSING AND MOUNT REPLACEMENT

THIS TASK COVERS:

a. Removal **b. Installation**

INITIAL SETUP

APPLICABLE MODELS
M816, M819

MATERIALS/PARTS
Four lockwashers

REFERENCES (TM)
TM 9-2320-260-10
TM 9-2320-260-20P

EQUIPMENT CONDITION
- Parking brake set (TM 9-2320-260-10).
- Floodlight lamp removed (para. 4-42).

a. Removal

NOTE

- Both M816 and M819 floodlight housings are replaced the same way. This procedure covers the M816 wrecker only.
- Tag all wires for installation.

1. Disconnect two wires (1) from housing (2).
2. Remove two nuts (6), mounting bracket (3) with housing (2), and two washers (4) from bracket (5).

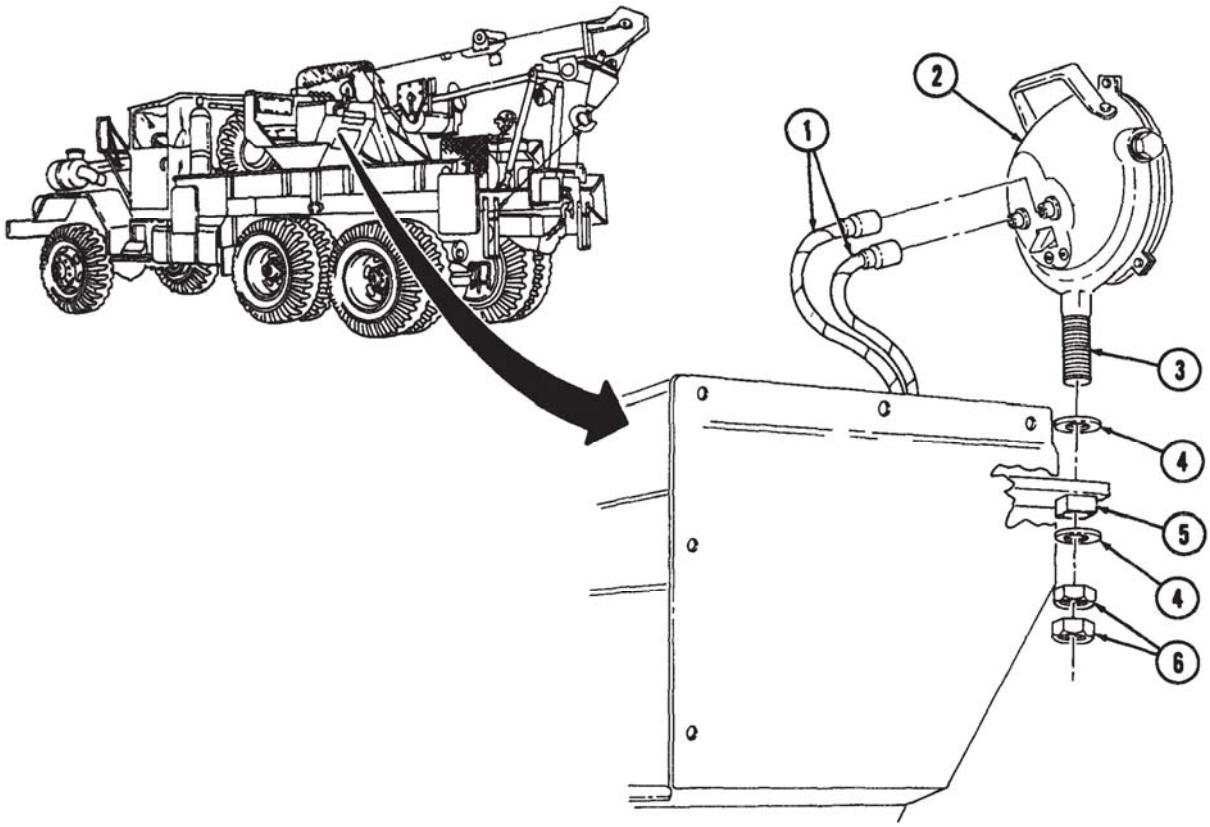

4-43. FLOODLIGHT HOUSING AND MOUNT REPLACEMENT (Contd)

3. Remove three screws (1), retaining ring (2), and three O-rings (3) from housing (11).
4. Remove four springs (28) and lamp (4) from retaining ring (2).
5. Remove two screws (5) and (7) and lamp wires (6) from lamp (4).
6. Disconnect switch wire (22) and lamp wire (6) from housing (11).
7. Remove two connectors (21) and grommets (20) from housing (11).
8. Remove two screws (27), retainer (26), and pressure switch (25) from switch housing (24).
9. Remove two screws (16), lockwashers (15), spacers (23), and switch housing (24) from housing (11). Discard lockwashers (15).
10. Remove two nuts (8), lockwashers (9), washers (10), screws (17), six washers (14), four spring washers (18), and housing (11) from mounting bracket (19). Discard lockwashers (9).
11. Remove two spacers (13) and grommets (12) from housing (11).

b. Installation

1. Install two grommets (12) and spacers (13) on housing (11).
2. Install housing (11) on mounting bracket (19) with four spring washers (18), six washers (14), two screws (17), washers (10), new lockwashers (9), and nuts (8).
3. Install switch housing (24) in housing (11) with two new lockwashers (15) and screws (16).
4. Install pressure switch (25) and retainer (26) on switch housing (24) with two screws (27).
5. Install two grommets (20) and connectors (21) on housing (11).
6. Connect switch wire (22) and lamp wire (6) to two connectors (21) in housing (11).
7. Install four springs (28) and lamp (4) on retaining ring (2).
8. Install two lamp wires (6) on lamp (4) with two screws (5) and (7).
9. Install lamp (4) and retaining ring (2) on housing (11) with three O-rings (3) and screws (1).

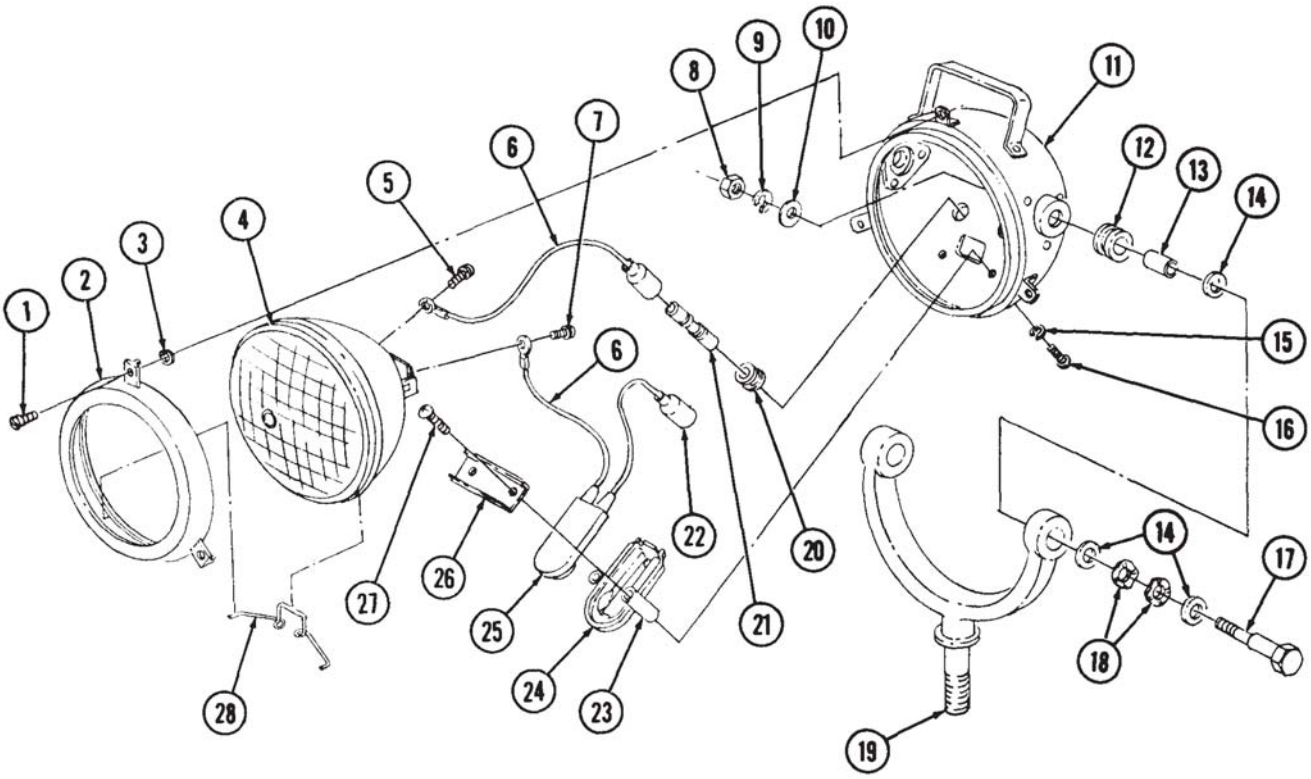

4-43. FLOODLIGHT HOUSING AND MOUNT REPLACEMENT (Contd)

10. Install mounting bracket (20) with housing (11) on bracket (31) with two washers (30) and nuts (32).
11. Connect wires (29) to housing (11).

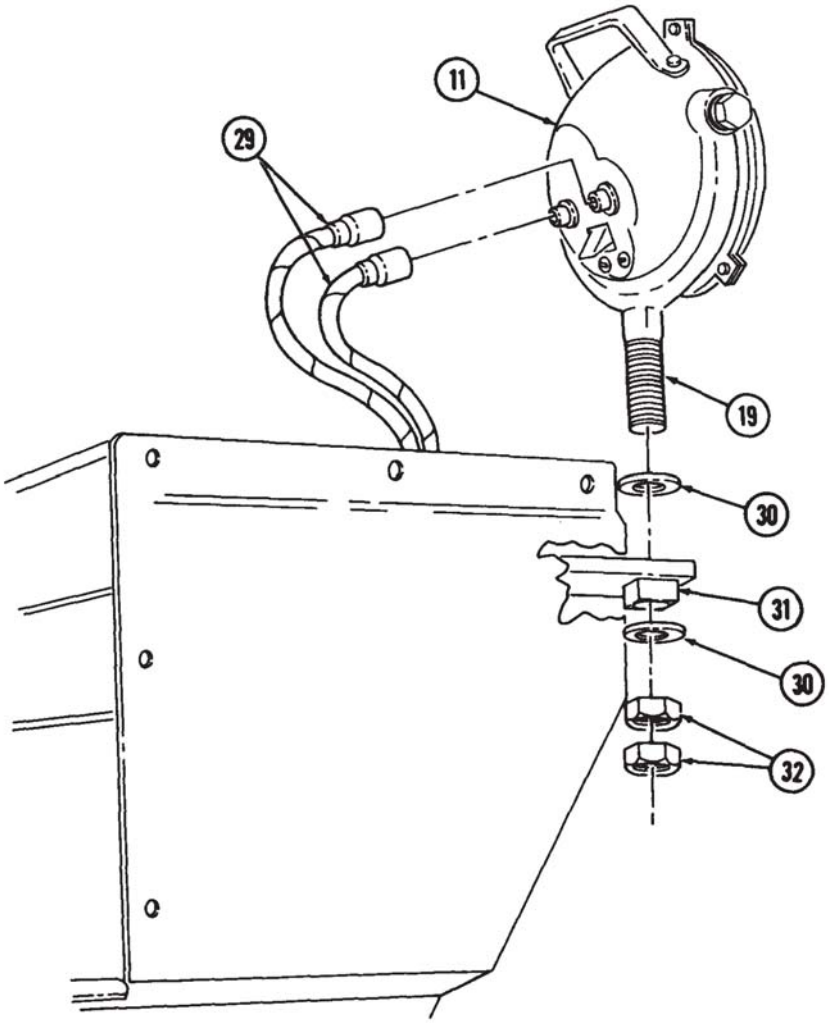

FOLLOW-ON TASK: Install floodlight lamp (para. 4-42).

4-44. SIDE MARKER AND CLEARANCE LIGHT REPLACEMENT

THIS TASK COVERS:

a. Removal **b. Installation**

INITIAL SETUP

APPLICABLE MODELS
M820, M820A1, M820A2, M821

MATERIALS/PARTS
Four lockwashers (M821)
Two clips
Gasket

REFERENCES (TM)
TM 9-2320-260-10
TM 9-2320-260-20P

EQUIPMENT CONDITION
- Parking brake set (TM 9-2320-260-10).
- Battery ground cable disconnected (para. 4-48).

NOTE

Side marker and clearance lights are replaced basically the same. This procedure covers the clearance lights.

a. Removal

1. Remove two screws (5) and lens frame (4) from base (7).
2. Remove two clips (3) and lens (6) from lens frame (4). Discard clips (3).
3. Remove lamp (2) from base (7).
4. Remove four screws (1), base (7), and gasket (8) from van body (10). Discard gasket (8).
5. Disconnect lead (9) from wire (11).

b. Installation

1. Install lead (9) through new gasket (8) and connect to wire (11).
2. Install new gasket (8) and base (7) on body (10) with four screws (1).
3. Install lamp (2) in base (7).
4. Install lens (6) in lens frame (4) with two new clips (3).
5. Install lens frame (4) on base (7) with two screws (5).

4-44. SIDE MARKER AND CLEARANCE LIGHT REPLACEMENT (Contd)

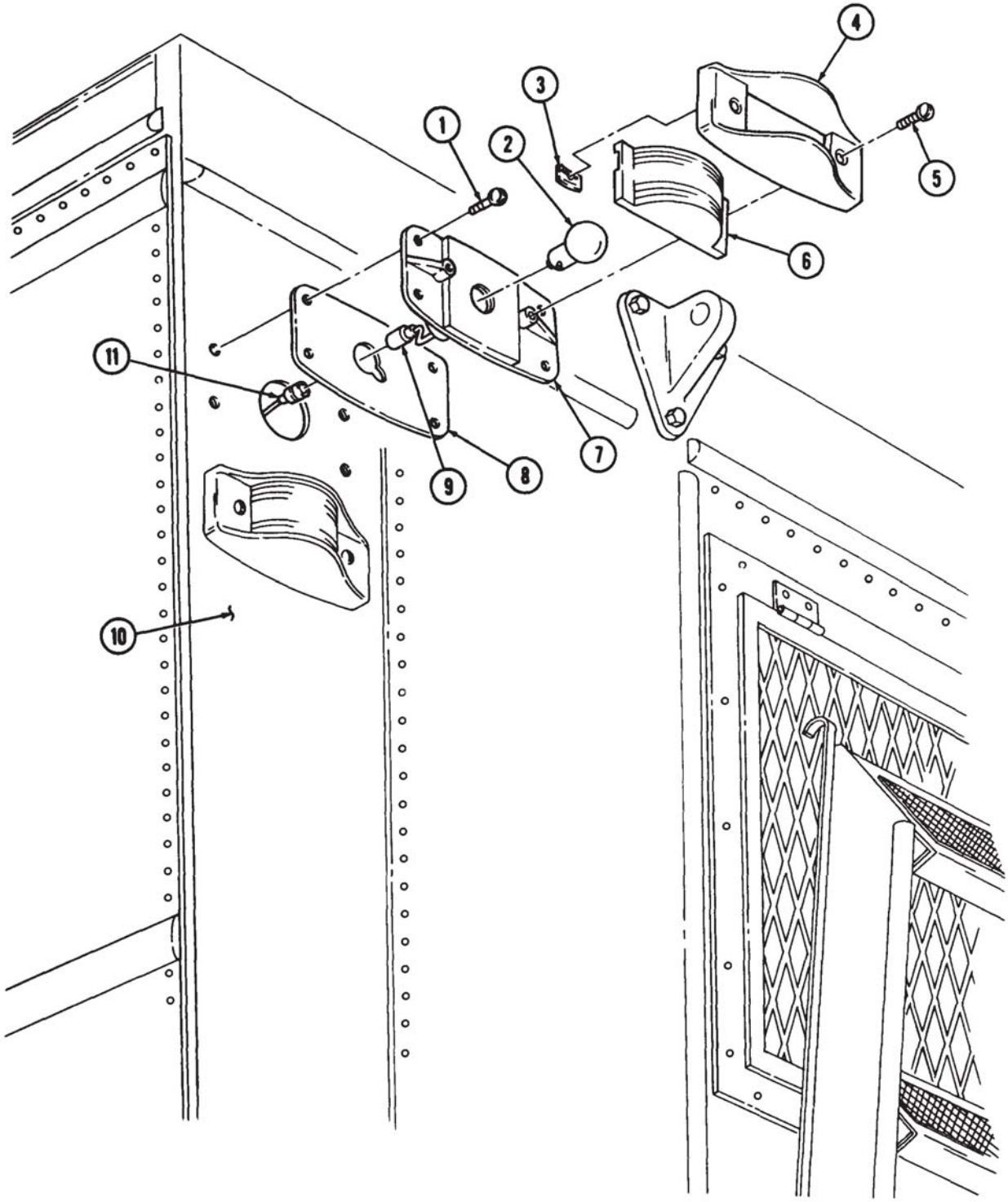

FOLLOW-ON TASK: Connect battery ground cable (para. 4-48).

4-45. REAR COMPOSITE LIGHT HOUSING AND BRACKET REPLACEMENT

THIS TASK COVERS:

a. Removal (M818, M820, M820A1, M820A2)
b. Installation (M818, M820, M820A1, M820A2)
c. Removal (M817)
d. Installation (M817)
e. Removal (M813, M813A1, M814)
f. Installation (M813, M813A1, M814)
g. Removal (M819)
h. Installation (M819)
i. Removal (M816)
j. Installation (M816)
k. Removal (M815)
l. Installation (M815)

INITIAL SETUP

APPLICABLE MODELS
All

MATERIALS/PARTS
Twelve screw-assembled lockwashers
Eighteen lockwashers
Thirteen locknuts

REFERENCES (TM)
TM 9-2320-260-10
TM 9-2320-260-20P

EQUIPMENT CONDITION
- Parking brake set (TM 9-2320-260-10).
- Battery ground cable disconnected (para. 4-48).

NOTE

Tag all wires for installation.

a. Removal (M818, M820, M820A1, M820A2)

1. Remove four screws (7) and cover (6) from bracket (11).
2. Disconnect four leads (12) from wires (10).
3. Remove two screw-assembled lockwashers (8) and housing (13) from bracket (11). Discard screw-assembled lockwashers (8).
4. Remove locknut (16), screw (3), nut (9), screw (4), two lockwashers (5), and bracket (11) from brace (2). Discard locknut (16) and lockwashers (5).
5. Remove two nuts (14), screws (15), and brace (2) from frame (1).

b. Installation (M818, M820, M820A1, M820A2)

1. Install brace (2) on frame (1) with two screws (15) and nuts (14).
2. Install bracket (11) on brace (2) with two new lockwashers (5), screw (4), nut (9), screw (3), and new locknut (16).
3. Connect four leads (12) through hole in bracket (11) to wires (10).
4. Install housing (13) on bracket (11) with two new screw-assembled lockwashers (8).
5. Install cover (6) on bracket (11) with four screws (7).

4-45. REAR COMPOSITE LIGHT HOUSING AND BRACKET REPLACEMENT (Contd)

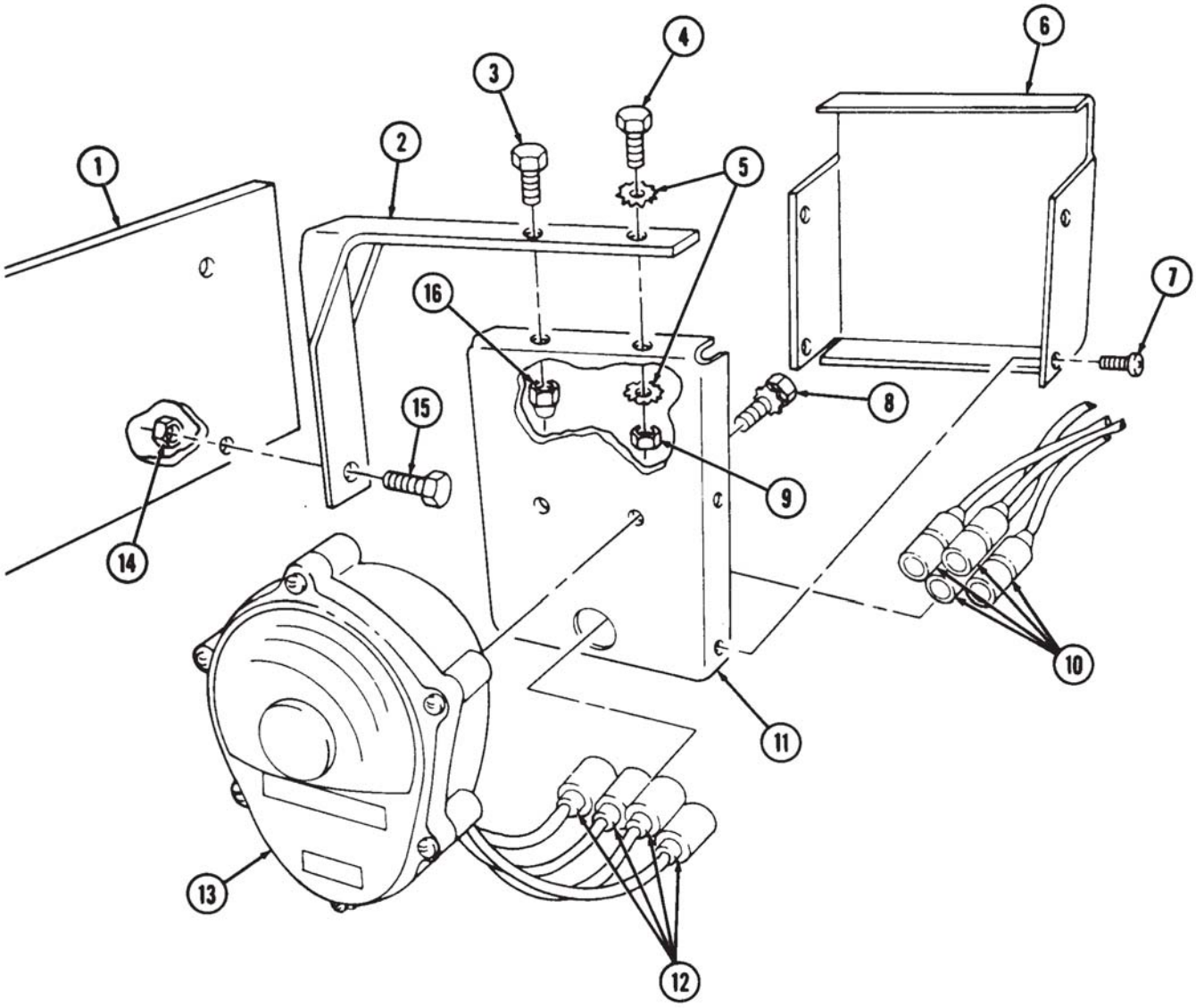

4-45. REAR COMPOSITE LIGHT HOUSING AND BRACKET REPLACEMENT (Contd)

c. Removal (M817)

1. Remove three locknuts (4), screws (6), and cover (3) from dump bed (1). Discard locknuts (4).
2. Disconnect four leads (7) from wires (5).
3. Remove two screw-assembled lockwashers (2) and housing (8) from dump bed (1). Discard screw-assembled lockwashers (2).

d. Installation (M817)

1. Install housing (8) on dump bed (1) with two new screw-assembled lockwashers (2).
2. Insert four leads (7) through hole in dump bed (1) and connect to four wires (5).
3. Install cover (3) on dump bed (1) with three screws (6) and new locknuts (4).

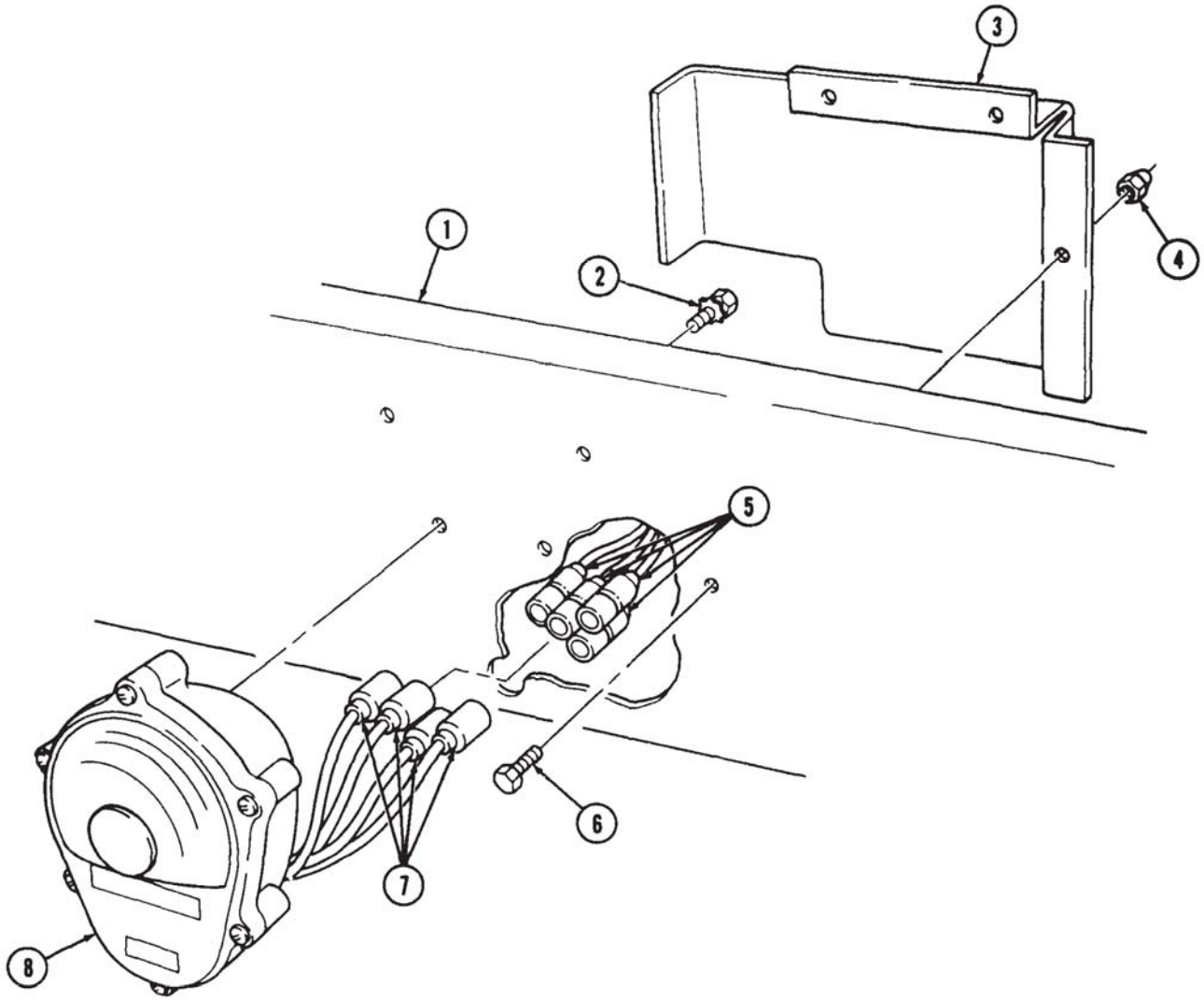

4-45. REAR COMPOSITE LIGHT HOUSING AND BRACKET REPLACEMENT (Contd)

e. Removal (M813, M813A1, M814)

1. Remove two locknuts (17), screws (20), and reflector (21) from bracket (14). Discard locknuts (17).
2. Remove four locknuts (18), screws (22), and cover (16) from bracket (14). Discard locknuts (18).
3. Disconnect four leads (23) from wires (9).
4. Remove two screw-assembled lockwashers (15) and housing (24) from bracket (14). Discard screw-assembled lockwashers (15).
6. Remove locknut (10), screw (25), nut (11), screw (13), two lockwashers (12), and bracket (14) from cargo bed (9). Discard locknut (10) and lockwashers (12).

f. Installation (M813, M813A1, M814)

1. Install bracket (14) on cargo bed (9) with two new lockwashers (12), screw (13), nut (11), screw (25). and new locknut (10).
2. Install housing (25) on bracket (14) with two new screw-assembled lockwashers (15).
3. Insert four leads (23) through hole in bracket (14) and connect to four wires (19).
4. Install cover (16) on bracket (14) with four screws (22) and new locknuts (17).
5. Install reflector (21) on bracket (14) with two screws (20) and new locknuts (18).

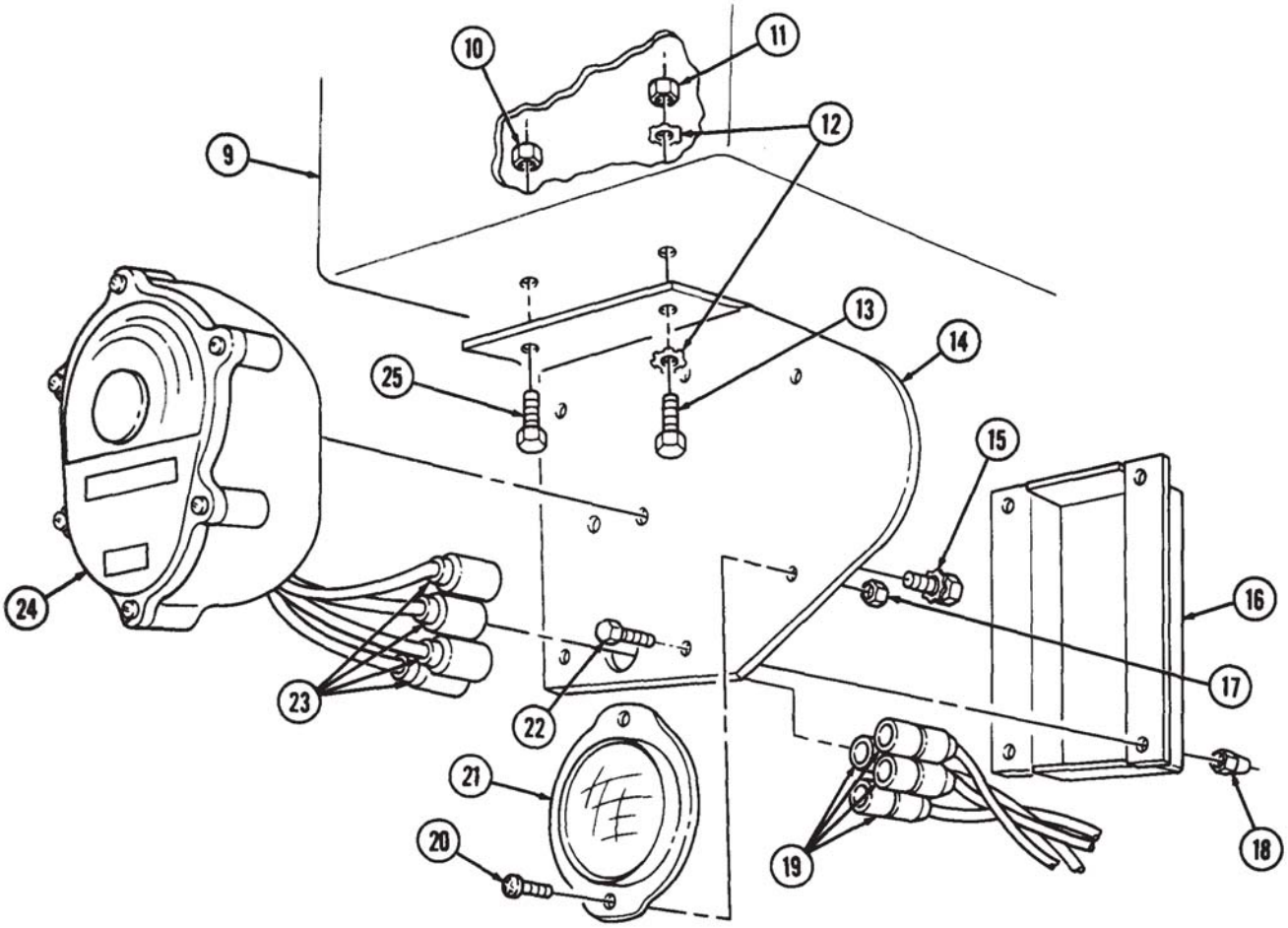

4-45. REAR COMPOSITE LIGHT HOUSING AND BRACKET REPLACEMENT (Contd)

g. Removal (M819)

1. Remove four nuts (3), lockwashers (2), screws (1), and two reflectors (5) from reflector brackets (6) and (17). Discard lockwashers (2).
2. Disconnect four leads (13) from wires (9).
3. Remove two screw-assembled lockwashers (10) and housing (14) from bracket (15). Discard screw-assembled lockwashers (10).
4. Remove three nuts (8), lockwashers (7), screws (4), and reflector brackets (6) and (17) from wrecker body (16) and bracket (15). Discard lockwashers (7).
5. Remove two screws (12), lockwashers (11), and bracket (15) from wrecker body (16). Discard lockwashers (11).

h. Installation (M819)

1. Install bracket (15) on wrecker body (16) with two new lockwashers (11) and screws (12).
2. Install reflector brackets (6) and (17) on wrecker body (16) and bracket (15) with three screws (4), new lockwashers (7), and nuts (8).
3. Install housing (14) on bracket (15) with two new screw-assembled lockwashers (10).
4. Connect four leads (13) to wires (9).
5. Install two reflectors (5) on reflector brackets (6) and (17) with four screws (1), new lockwashers (2), and nuts (3).

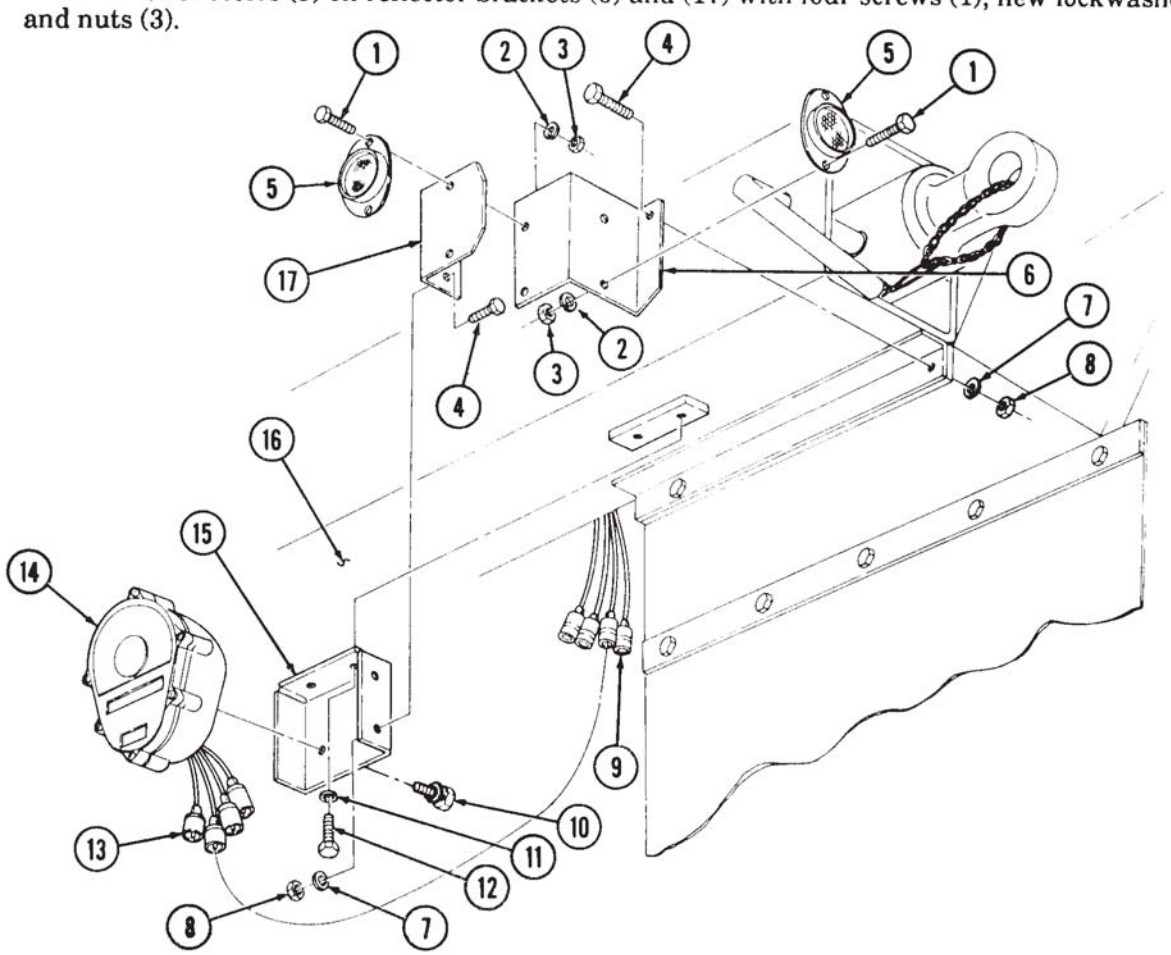

4-45. REAR COMPOSITE LIGHT HOUSING AND BRACKET REPLACEMENT (Contd)

i. Removal (M816)

1. Remove two nuts (23), lockwashers (24), screws (26), and reflector (25) from taillight guard (21). Discard lockwashers (24).
2. Remove four screws (22) and taillight guard (21) from bracket (28).
3. Disconnect four leads (29) from wires (27).
4. Remove two screw-assembled lockwashers (20) and housing (30) from bracket (28). Discard screw-assembled lockwashers (20).
5. Remove two locknuts (31), lockwashers (32), screws (19), and bracket (28) from ladder bracket (18). Discard locknuts (31) and lockwashers (32).

j. Installation (M816)

1. Install bracket (28) on ladder bracket (18) with two screws (19), new lockwashers (32), and locknuts (31).
2. Install housing (30) on bracket (28) with two new screw-assembled lockwashers (20).
3. Insert four leads (29) through hole in bracket (28) and connect to four wires (27).
4. Install taillight guard (21) on bracket (28) with four screws (22).
5. Install reflector (25) on taillight guard (21) with two screws (26), new lockwashers (24), and nuts (23).

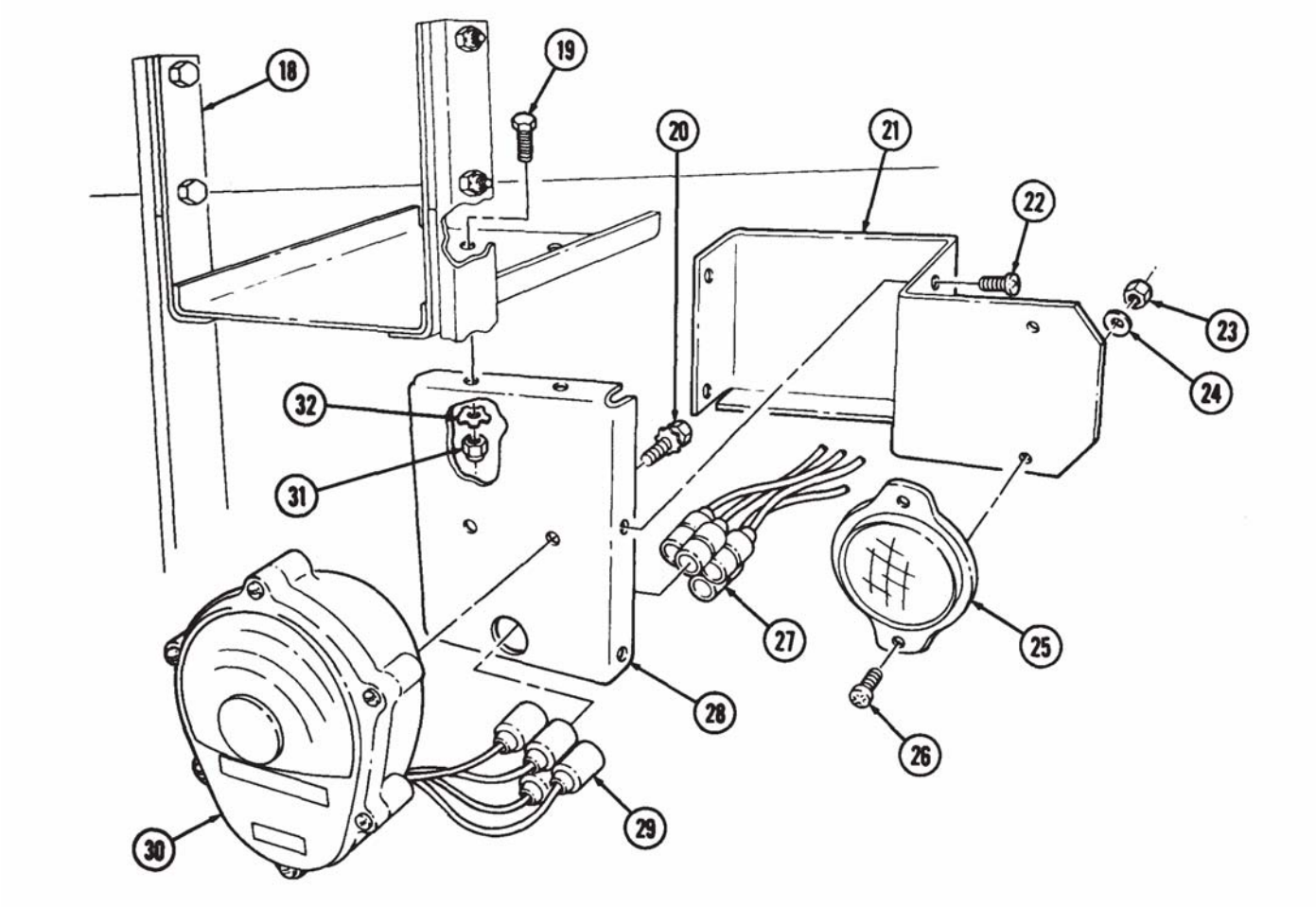

4-45. REAR COMPOSITE LIGHT HOUSING AND BRACKET REPLACEMENT (Contd)

k. Removal (M815)

1. Disconnect four leads (4) from wires (5).
2. Remove two screw-assembled lockwashers (3) and housing (6) from brackets (1) and (2). Discard screw-assembled lockwashers (3).

l. Installation (M815)

1. Install housing (6) on brackets (1) and (2) with two new screw-assembled lockwashers (3).
2. Connect four leads (4) to wires (5).

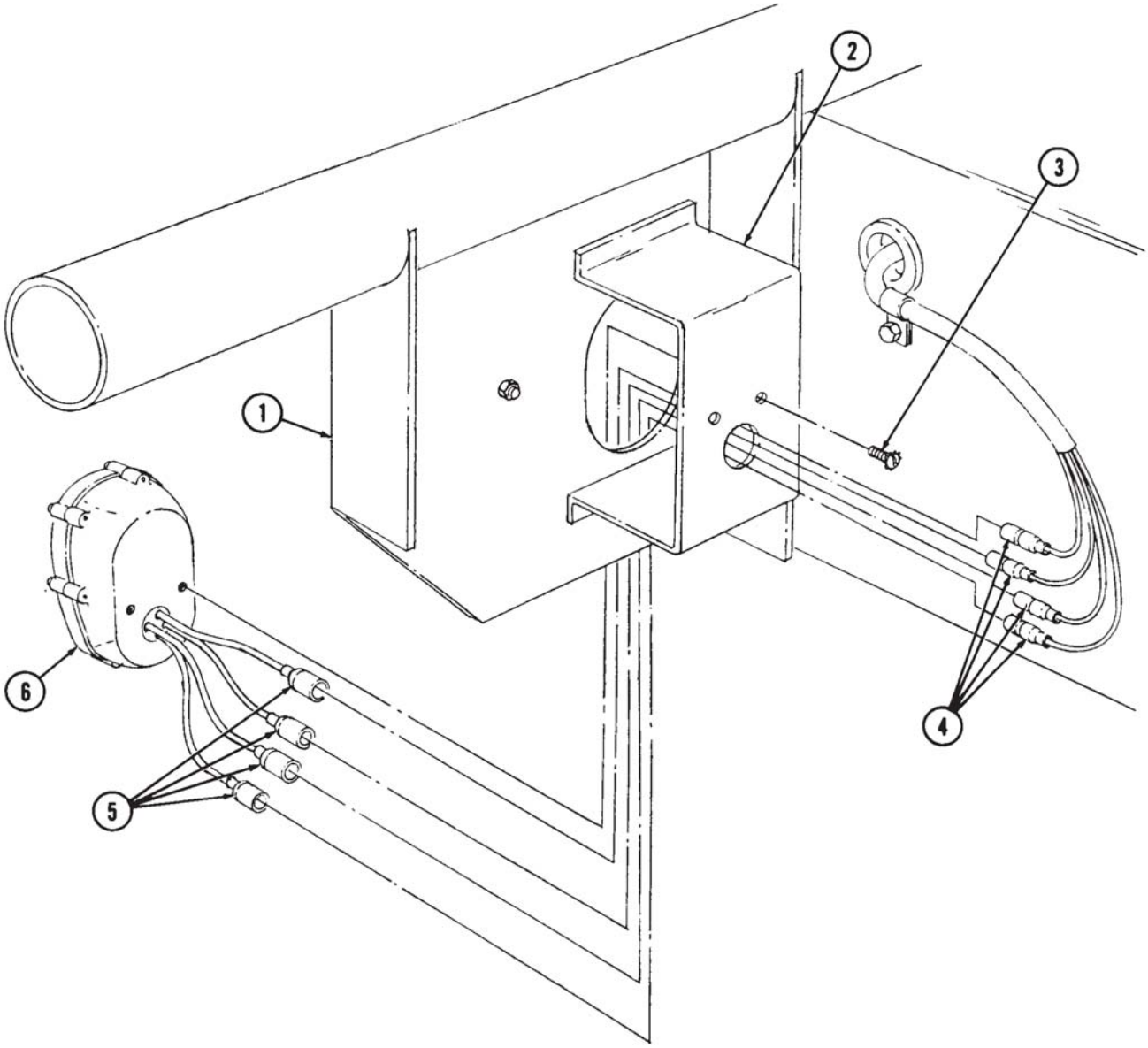

FOLLOW-ON TASK: Connect battery ground cable (para. 4-48).

4-46. REAR COMPOSITE LIGHT IAMP REPLACEMENT

THIS TASK COVERS:

a. Removal

b. Installation

INITIAL SETUP

APPLICABLE MODELS
All

MATERIALS/PARTS
Gasket

REFERENCES (TM)
TM 9-2320-260-10
TM 9-2320-260-20P

EQUIPMENT CONDITION
Parking brake set (TM 9-2320-260-10).

a. Removal

1. Loosen six screws (4) and remove lens cover (5) and gasket (3) from housing (1). Discard gasket (3).
2. Remove lamp(s) (2) from housing socket(s) (6).

b. Installation

1. Install lamp(s) (2) in housing socket(s) (6).
2. Install new gasket (3) and lens cover (5) on housing (1). Tighten six screws (4).

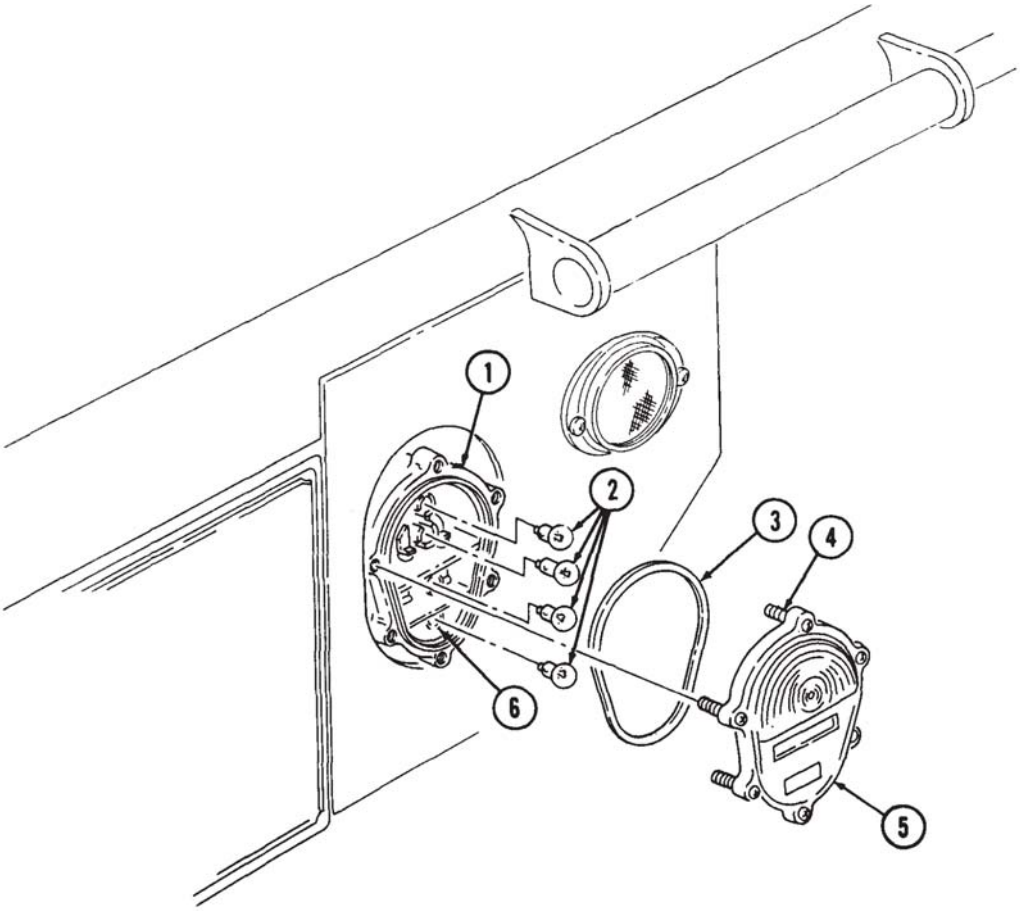

Section V. BATTERY SYSTEM MAINTENANCE

4-47. BATTERY SYSTEM MAINTENANCE INDEX

PARA. NO.	TITLE	PAGE NO.
4-48.	Battery Cables and Clamps Replacement	4-90
4-49.	Battery and Battery Box Replacement	4-101
4-50.	Battery Box Supports Replacement	4-104

4-48. BATTERY CABLES AND CLAMPS REPLACEMENT

THIS TASK COVERS:

a. Ground Cable Disconnection
b. Battery-to-Battery Cable Removal
c. Ground and Negative Cable Removal
d. Positive Cable Removal
e. Accessory Cable Removal
f. Accessory Cable Installation
g. Positive Cable Installation
h. Ground and Negative Cable Installation
i. Battery-to-Battery Cable Installation
j. Ground Cable Connection

INITIAL SETUP

APPLICABLE MODELS
All

MATERIALS/PARTS
Four lockwashers
Two locknuts
Three screw-assembled lockawashers
GAA grease (Appendix C, Item 16)

REFERENCES (TM)
TM 9-2320-260-10
TM 9-2320-260-20P
TM 9-6140-200-14

EQUIPMENT CONDITION
- Parking brake set (TM 9-2320-260-10).
- Cab tunnels removed (para. 11-30).

GENERAL SAFETY INSTRUCTIONS
- Wear safety goggles and rubber gloves, and do not smoke when performing battery-maintenance.
- Remove all jewelry.
- When removing battery cables, disconnect ground cable first.

WARNING

- Battery acid (electrolyte) is extremely harmful. Always wear safety goggles and rubber gloves when performing battery maintenance. Severe injury will result if acid contacts eyes or skin.
- Do not smoke, have open flame, or make sparks when performing battery maintenance. Batteries may explode, causing severe injury to personnel.
- Remove all jewelry such as rings, dog tags, bracelets, etc. If jewelry or disconnected battery cable contacts battery post, a direct short can result, causing damage to equipment or severe injury to personnel.
- When removing battery cables, disconnect ground cable first. Do not allow tools to come in contact with vehicle when disconnecting cable clamps. A direct short can result, causing instant heating of tools, tool damage, battery damage, battery explosion, or severe injury to personnel.

4-48. BATTERY CABLES AND CLAMPS REPLACEMENT (Contd)

CAUTION

- During installation of battery terminal clamps, ensure positive clamps are installed on positive (+) posts and negative clamps on negative (-) posts. Failure to connect clamps to correct posts will reverse polarity of circuitry and may cause damage to rectifier diodes in alternator, vehicle wiring, and radios (if equipped).

  Do not use a hammer during installation of battery terminal clamps. Spread clamps open to prevent damage to equipment.

NOTE

- For general cleaning instructions, maintenance, and servicing of battery cables and clamps, refer to TM 9-6140-200-14.
- Tag all cables for installation.

a. Ground Cable Disconnection

1. Release two catches (6) and remove upper running board (1) from two battery boxes (8).
2. Remove four safety pins (9), release four handles (10), and pull two battery boxes (8) onto running board (11).
3. Loosen nut (13) and screw (15) and remove ground cable terminal clamp (14) from battery post (12).

b. Battery-to-Battery Cable Removal

Loosen nut (4) and screw (5) on each battery terminal clamp (3) and remove clamps (3) and cable (2) from battery

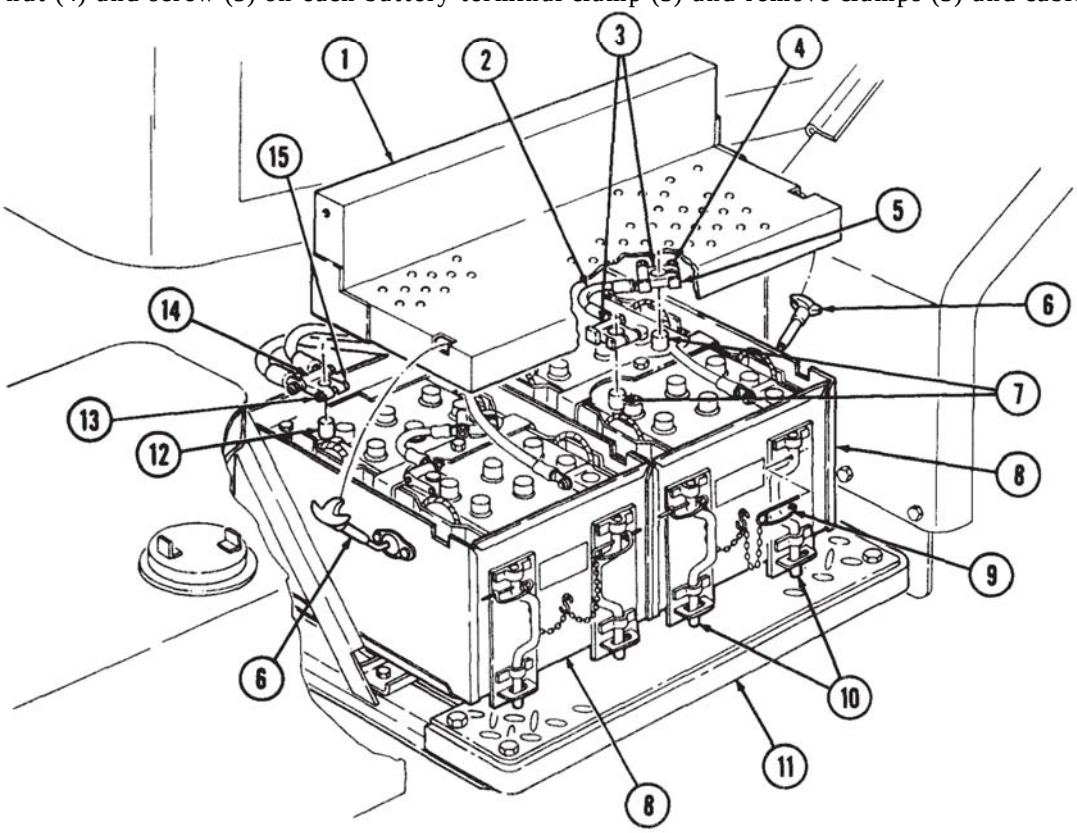

4-48. BATTERY CABLES AND CLAMPS REPLACEMENT (Contd)

c. Ground and Negative Cable Removal

1. Loosen nut (16) and screw (14) and remove terminal clamp (18) from battery post (15).
2. Remove nut (19), screw (17), and cable(s) (5) and (13) from terminal clamp (18).
3. Remove nut (11) and negative cable (13) from screw (12).
4. Remove locknut (6), screw (1), two lockwashers (2), ground cable (5), negative cable (4), and negative slave cable (3) from frame (7). Discard locknut (6) and lockwashers (2).
5. Remove locknut (8), screw (9), clamp (10), and negative cable (4) from frame (7). Discard locknut (8).
6. Remove three screw-assembled lockwashers (22), clamps (21), negative cable (4), positive cable (23), and accessory cable (24) from transmission top cover (25) and engine (20). Discard screw-assembled lockwashers (22).
7. Remove nut (30), lockwasher (29), negative cable (4), ground cable (27), and ground strap (28) from starter (26). Discard lockwasher (29).

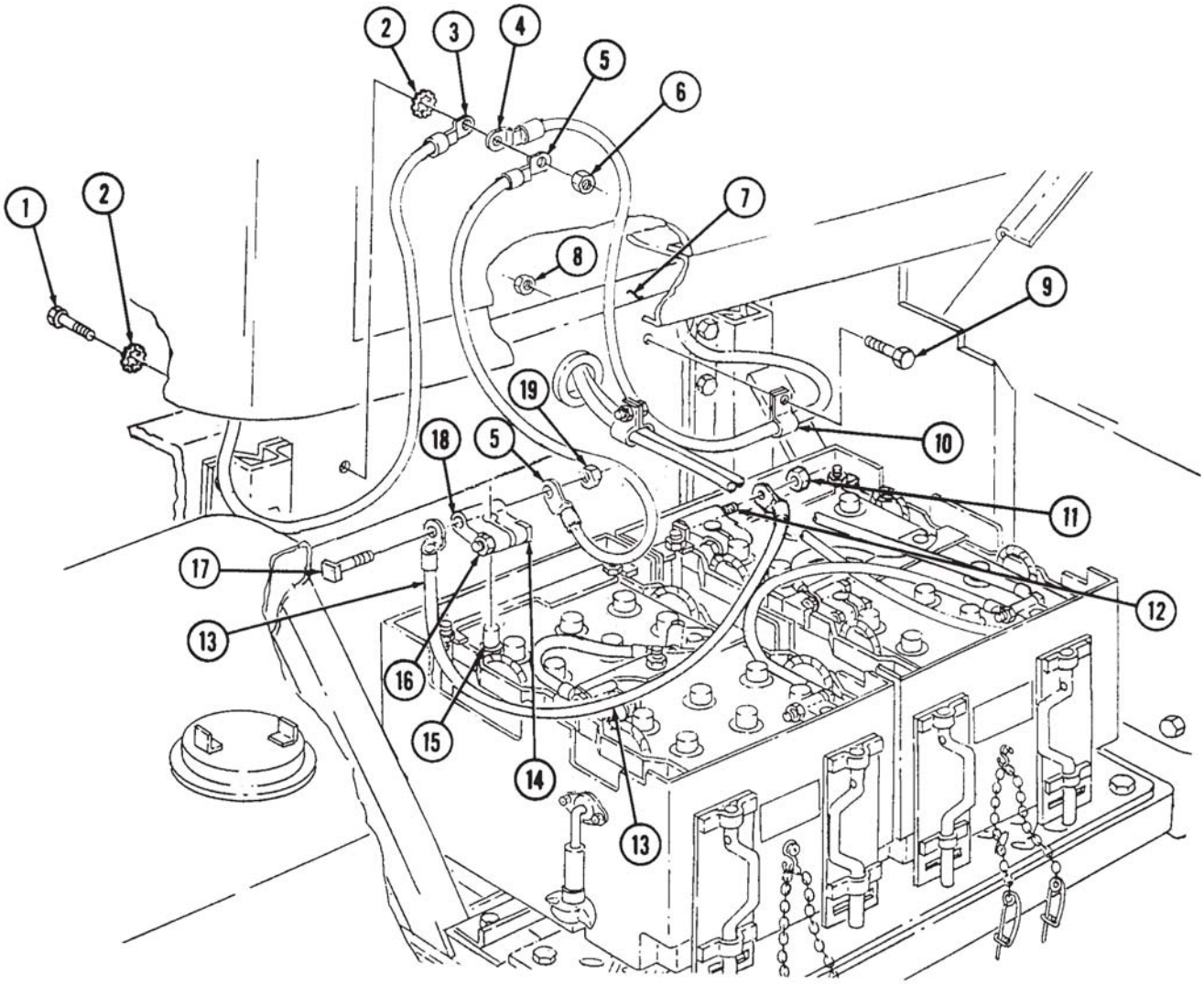

4-48. BATTERY CABLES AND CLAMPS REPLACEMENT (Contd)

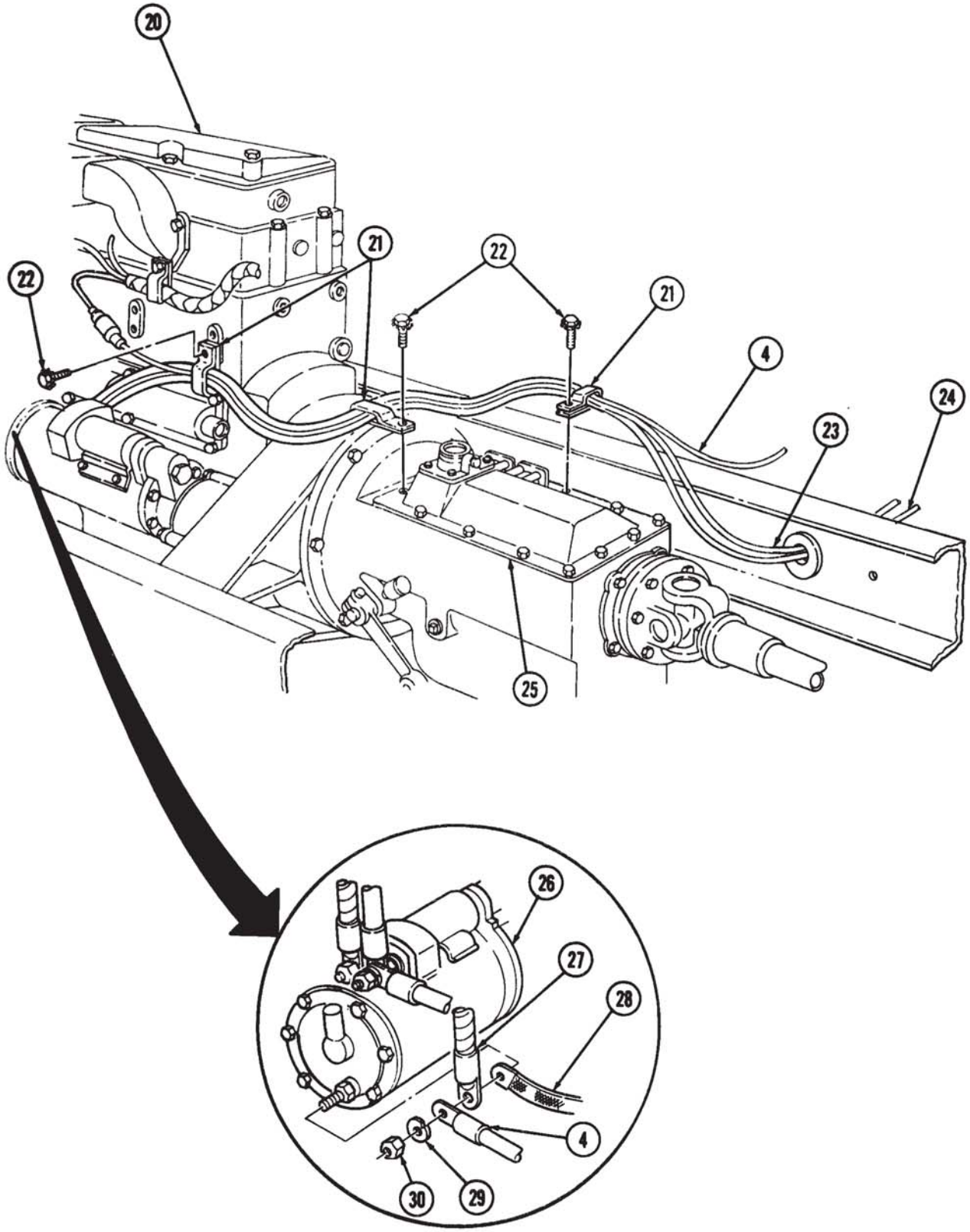

4-48. BATTERY CABLES AND CLAMPS REPLACEMENT (Contd)

d. Positive Cable Removal

1. Loosen nut (10) and screw (8) and remove terminal clamp (9) from battery post (11).
2. Remove nut (5), screw (7), and positive cables (4) and (6) from terminal clamp (9).
3. Loosen nut (15), screw (13), and remove terminal clamp (14) from battery post (16).
4. Remove nut (17), screw (12), and positive cable (4) from terminal clamp (14).
5. Remove nut (19), screw (3), and clamp (18) from positive cable (6).
6. Remove two screw-assembled lockwashers (40), clamps (39), positive cable (6), negative cable (41), and accessory cable (33) from transmission top cover (42). Discard screw-assembled lockwashers (40).
7. Remove nut (48), lockwasher (47), and positive cables (6) and (45) from starter solenoid (46). Discard lockwasher (47).
8. Remove screw-assembled lockwasher (44), clamp (43), positive cable (6), negative cable (41), and accessory cable (33) from engine (38). Discard screw-assembled lockwashers (44).
9. Remove grommet (2) and positive cable (6) from frame rail (1).

e. Accessory Cable Removal

1. Remove nut (10) and accessory cable (33) from terminal clamp (9).
2. Loosen two nuts (31) and (24) and screws (30) and (29), and remove two terminal clamps (22) and (27) from battery posts (32), (34), (35), and (36).
3. Remove two nuts (20) and (25) and screws (23) and (28), and remove battery cables (21) and (26) from two terminal clamps (22) and (27).
4. Remove two screw-assembled lockwashers (40), clamps (39), accessory cable (33), positive cable (6), and negative cable (41) from transmission top cover (42). Discard screw-assembled lockwashers (40).
5. Disconnect accessory cable (33) from lead (37).
6. Remove screw-assembled lockwasher (44), clamp (43), accessory cable (33), positive cable (6), and negative cable (41) from engine (38). Discard screw-assembled lockwasher (44).
7. Remove nut (19), screw (3), and clamp (18) from accessory cable (33).
8. Remove grommet (2) and accessory cable (33) from frame rail (1)

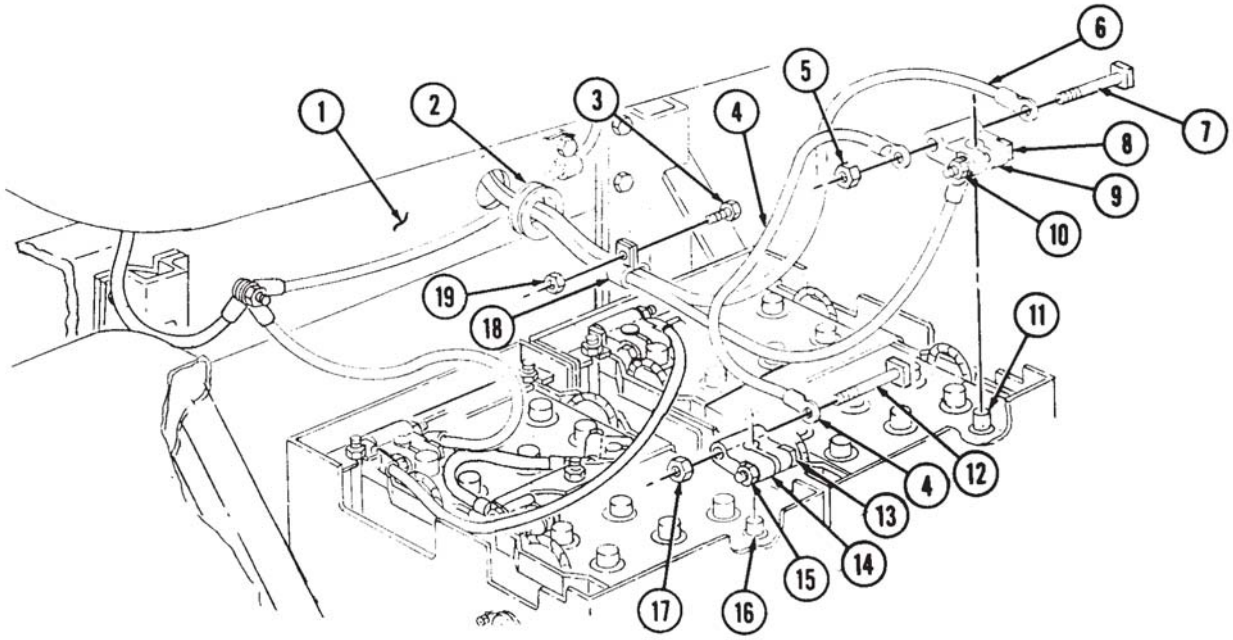

4-48. BATTERY CABLES AND CLAMPS REPLACEMENT (Contd)

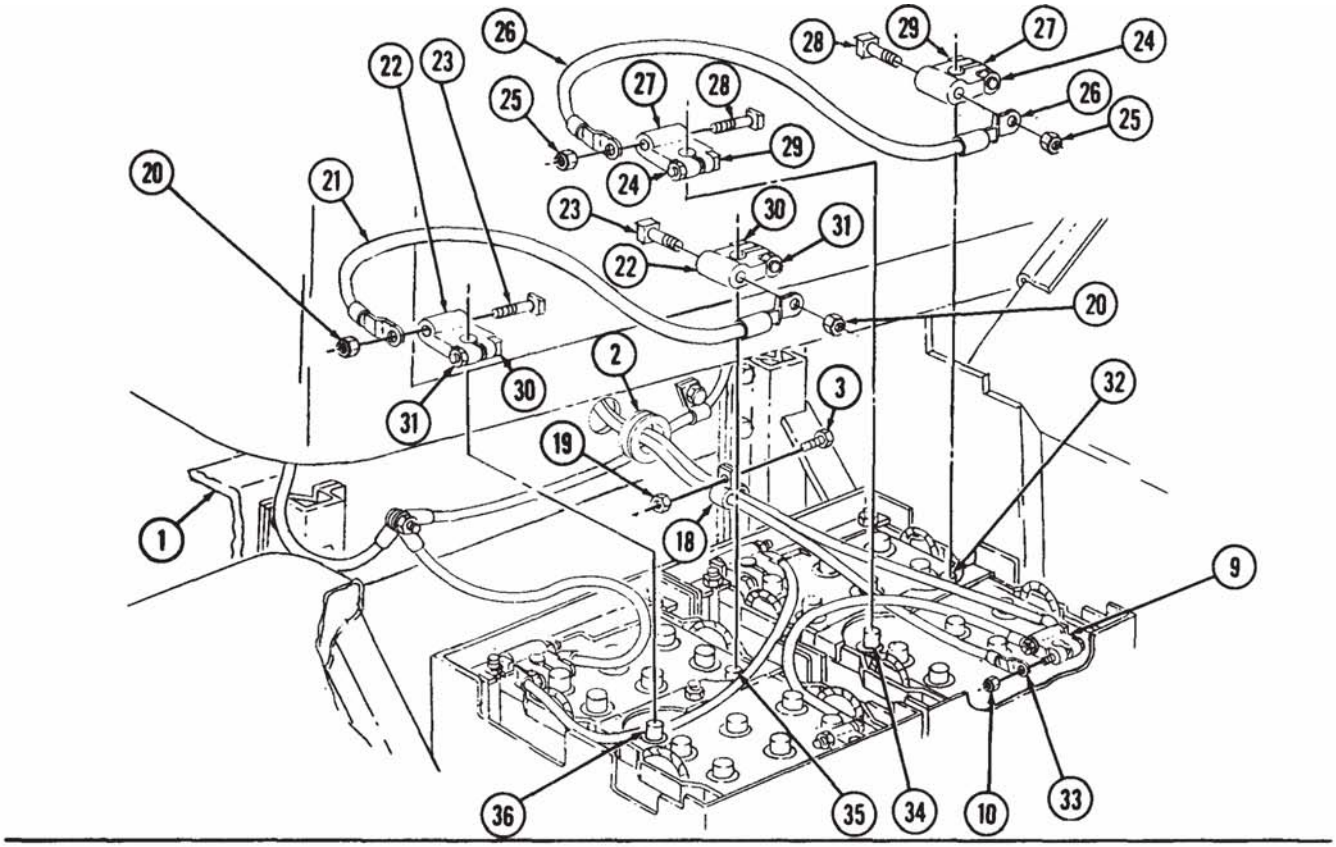

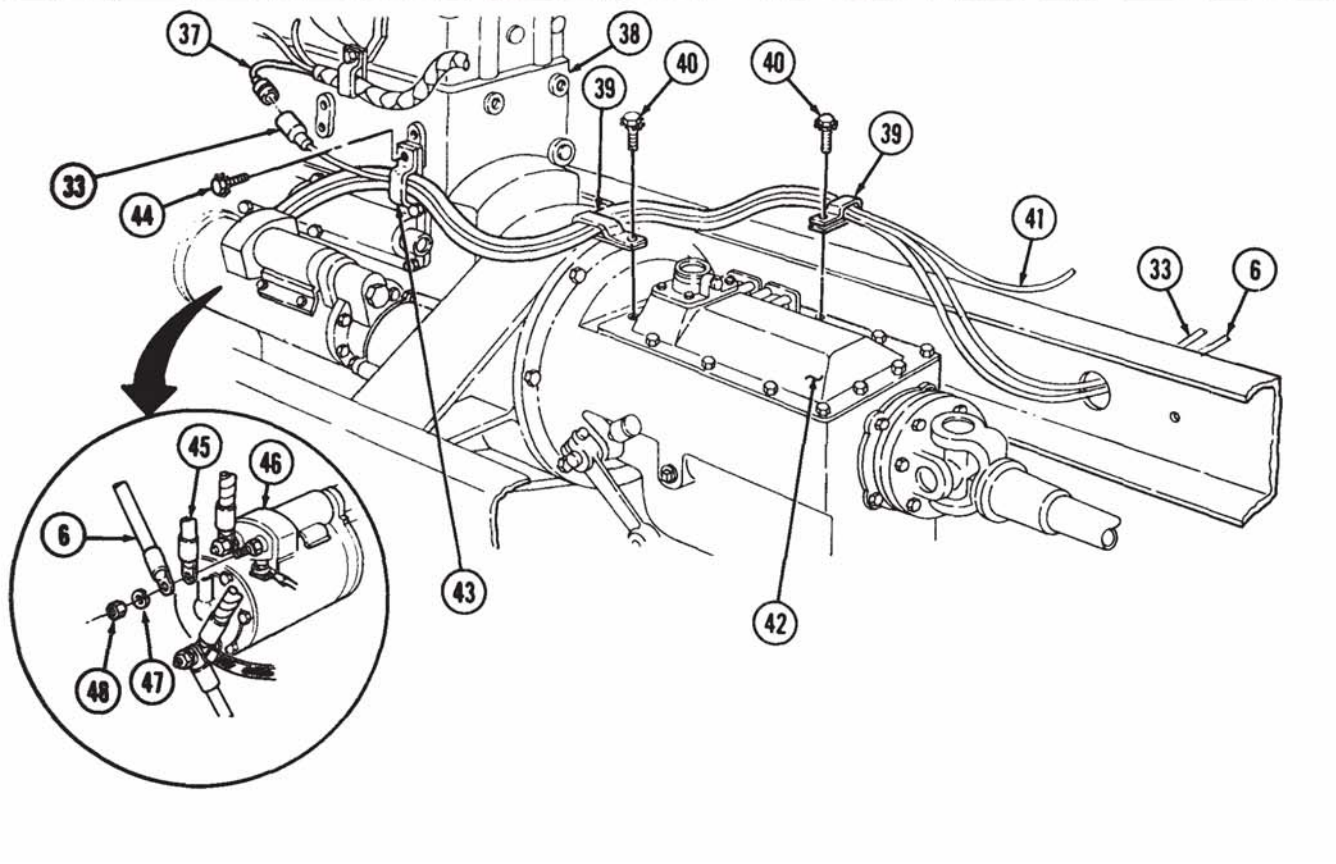

4-48. BATTERY CABLES AND CLAMPS REPLACEMENT (Contd)

f. Accessory Cable Installation

1. Connect accessory cable (11) to lead (1).
2. Route accessory cable (11) behind engine (2), over transmission top cover (8), and through frame (7).
3. Install accessory (11) cable on terminal clamp (31) with nut (32).
4. Install battery cable (20) on two terminal clamps (23) with screws (24) and nuts (21).
5. Install battery cable (17) on two terminal clamps (18) with screws (19) and nuts (16) and (28).
6. Apply light coat of GAA grease to two terminal clamps (18) and (23).
7. Install two terminal clamps (18) and (23) on battery posts (35), (33), (34), and (30). Tighten two nuts (22) and (27) and screws (25) and (26).
8. Install accessory cable (11), positive cable (6), and negative cable (5) on engine (2) with clamp (9) and new screw-assembled lockwasher (10).
9. Install accessory cable (11), positive cable (6), and negative cable (5) on transmission top cover (8) with two clamps (4) and new screw-assembled lockwashers (3).
10. Place grommet (38) around positive cable (6) and accessory cable (11) and install grommet (38) on frame (7).
11. Install clamp (36) on positive cable (6) and accessory cable (11) with screw (29) and nut (37).

g. Positive Cable Installation

1. Install positive cables (6) and (13) on starter solenoid (14) with new lockwasher (12) and nut (15).
2. Route positive cable (6) behind engine (2), over transmission top cover (8), and through hole in frame (7).
3. Install positive cable (6), negative cable (5), and accessory cable (11) on engine (2) with clamp (9) and new screw-assembled lockwasher (10).
4. Install positive cable (6), negative cable (5), accessory cable (11) on transmission top cover (8) with two clamps (4) and new screw-assembled lockwashers (3).
5. Install positive cables (6) and (39) on terminal clamp (43) with screw (41) and nut (40).
6. Apply light coat of GAA grease to terminal clamp (43).
7. Install terminal clamp (43) on battery post (45) and tighten nut (44) and screw (42).
8. Install positive cable (39) on terminal clamp (48) with screw (46) and nut (51).
9. Apply light coat of GM grease to terminal clamp (48).
10. Install terminal clamp (48) on battery post (49) and tighten nut (50) and screw (47).
11. Place grommet (38) around positive (6) and accessory cable (11) and install grommet (38) on frame (7).
12. Install clamp (36) on positive cable (6) and accessory cable (11) with screw (29) and nut (37).

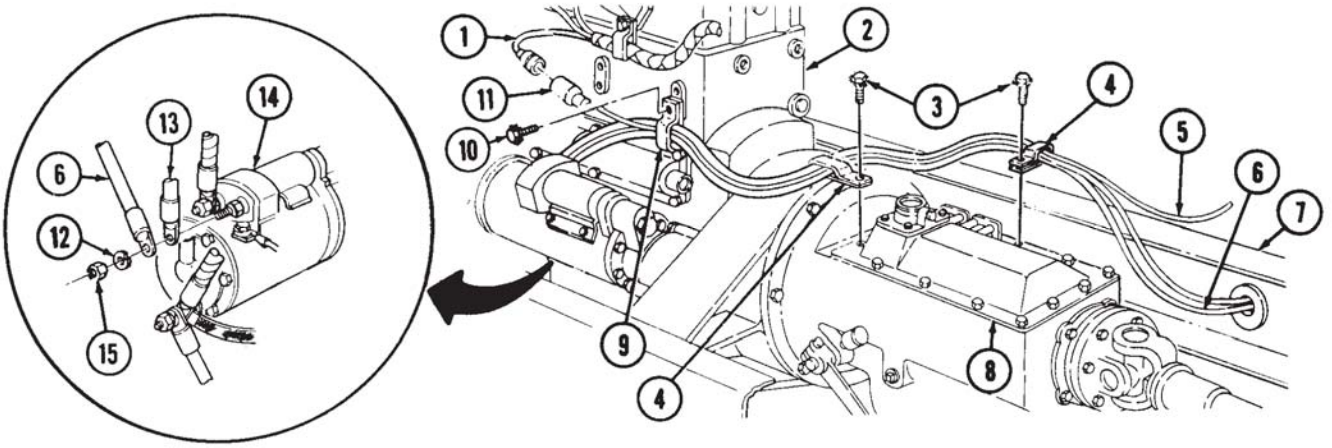

4-48. BATTERY CABLES AND CLAMPS REPLACEMENT (Contd)

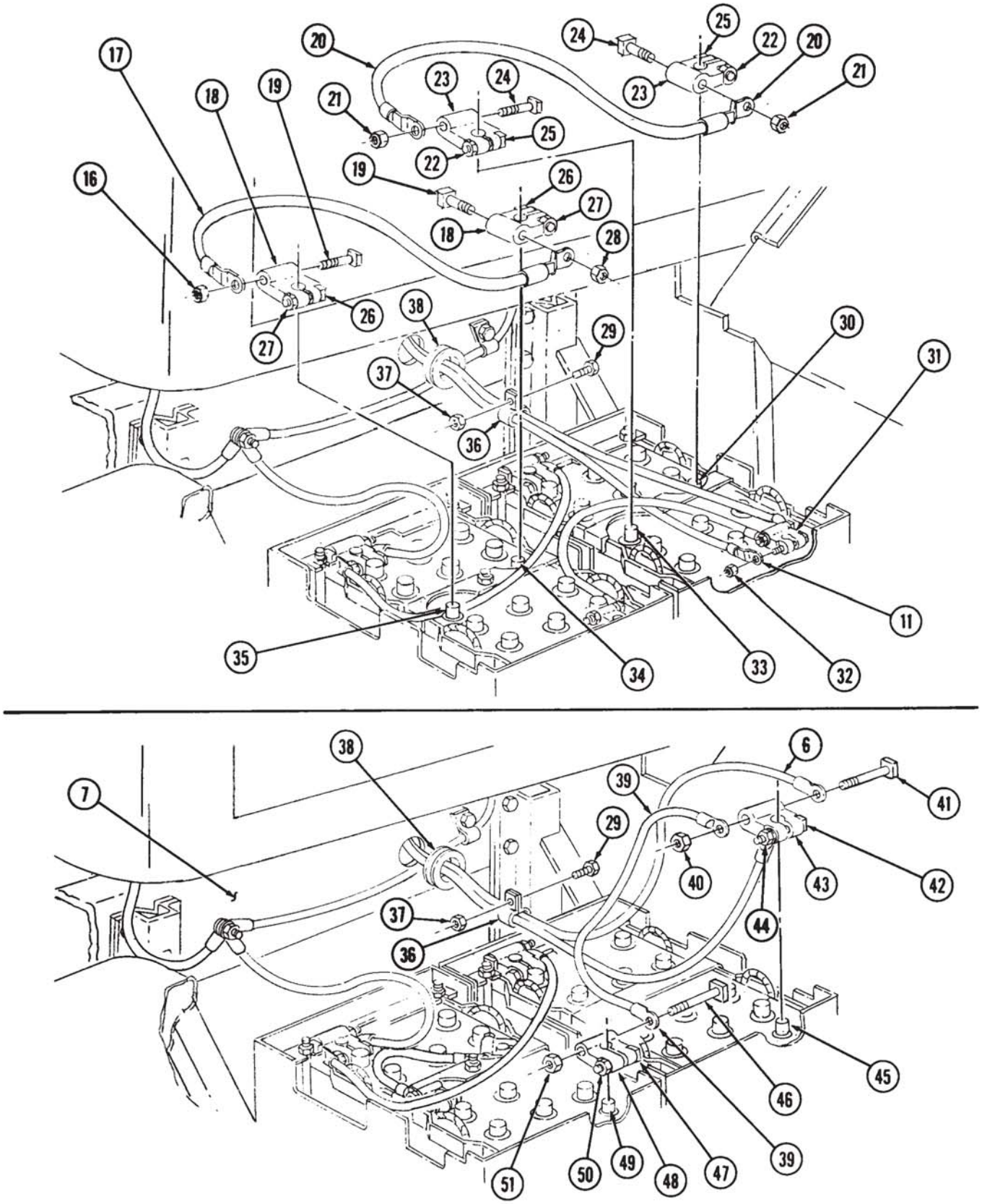

4-48. BATTERY CABLES AND CLAMPS REPLACEMENT (Contd)

h. Ground and Negative Cable Installation

1. Install ground strap (14), ground cable (13), and negative cable (4) on starter (12) with new lockwasher (15) and nut (16).
2. Route negative cable (4) behind engine (1), over transmission top cover (9), and through grommet (5) on frame (8).
3. Install negative cable (4), positive cable (6), and accessory cable (7) on engine (1) with clamp (10) and new screw-assembled lockwasher (11).
4. Install negative cable (4), positive cable (6), and accessory cable (7) on transmission top cover (9) with two clamps (2) and new screw-assembled lockwashers (3).
5. Install negative cable (4), ground cable (22), and negative slave cable (21) on frame (8) with two new lockwashers (18), screw (17), and new locknut (23).
6. Install negative cable (4) on frame (8) with clamp (26), screw (27), and new locknut (24).
7. Install negative cable (29) and ground cable (22) on terminal clamp (19) with screw (33) and nut (20).
8. Apply light coat of GAA grease to terminal clamp (19).
9. Install terminal clamp (19) on battery post (31) and tighten nut (32) and screw (30).
10. Install ground cable (29) on screw (25) with nut (28).

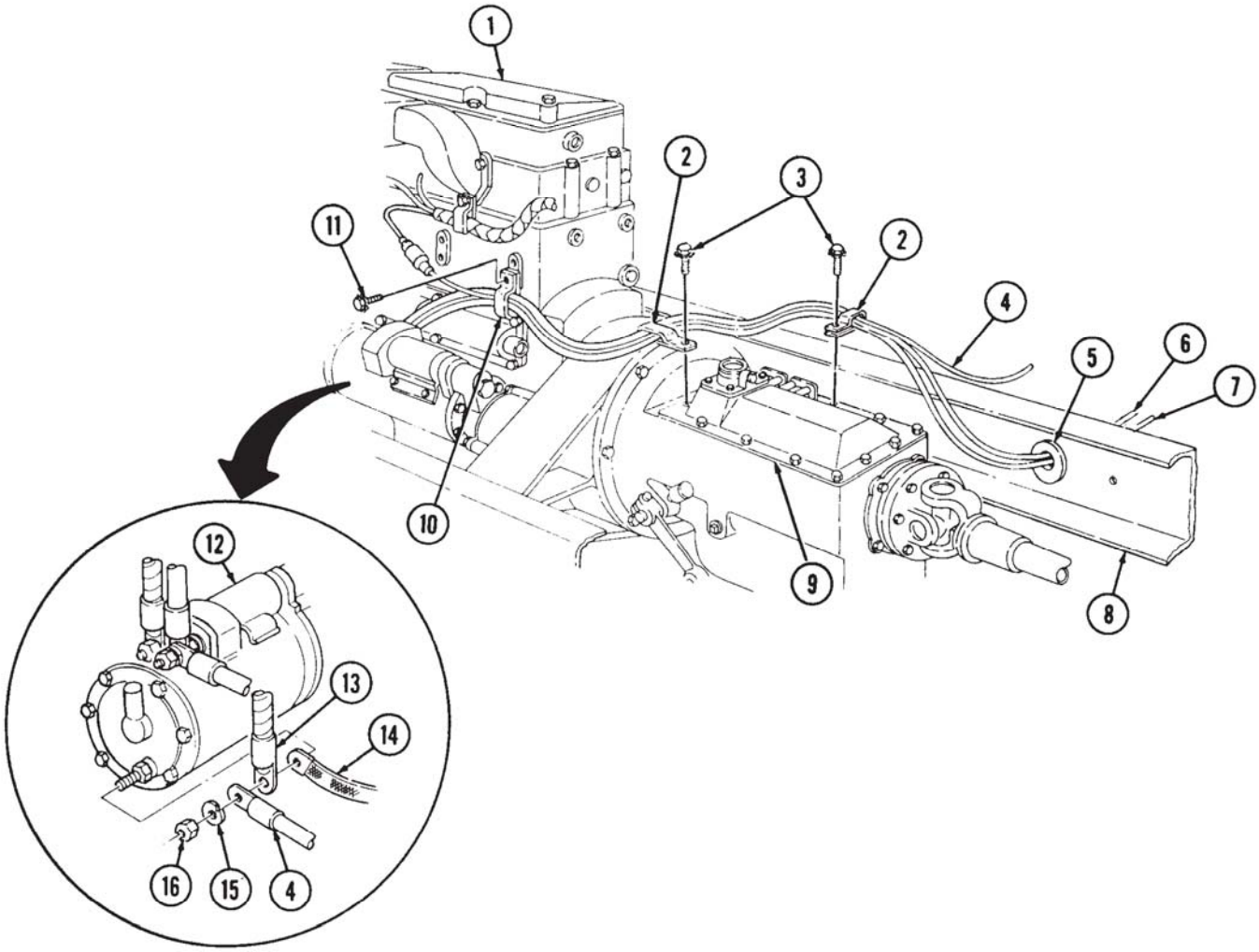

4-48. BATTERY CABLES AND CLAMPS REPLACEMENT (Contd)

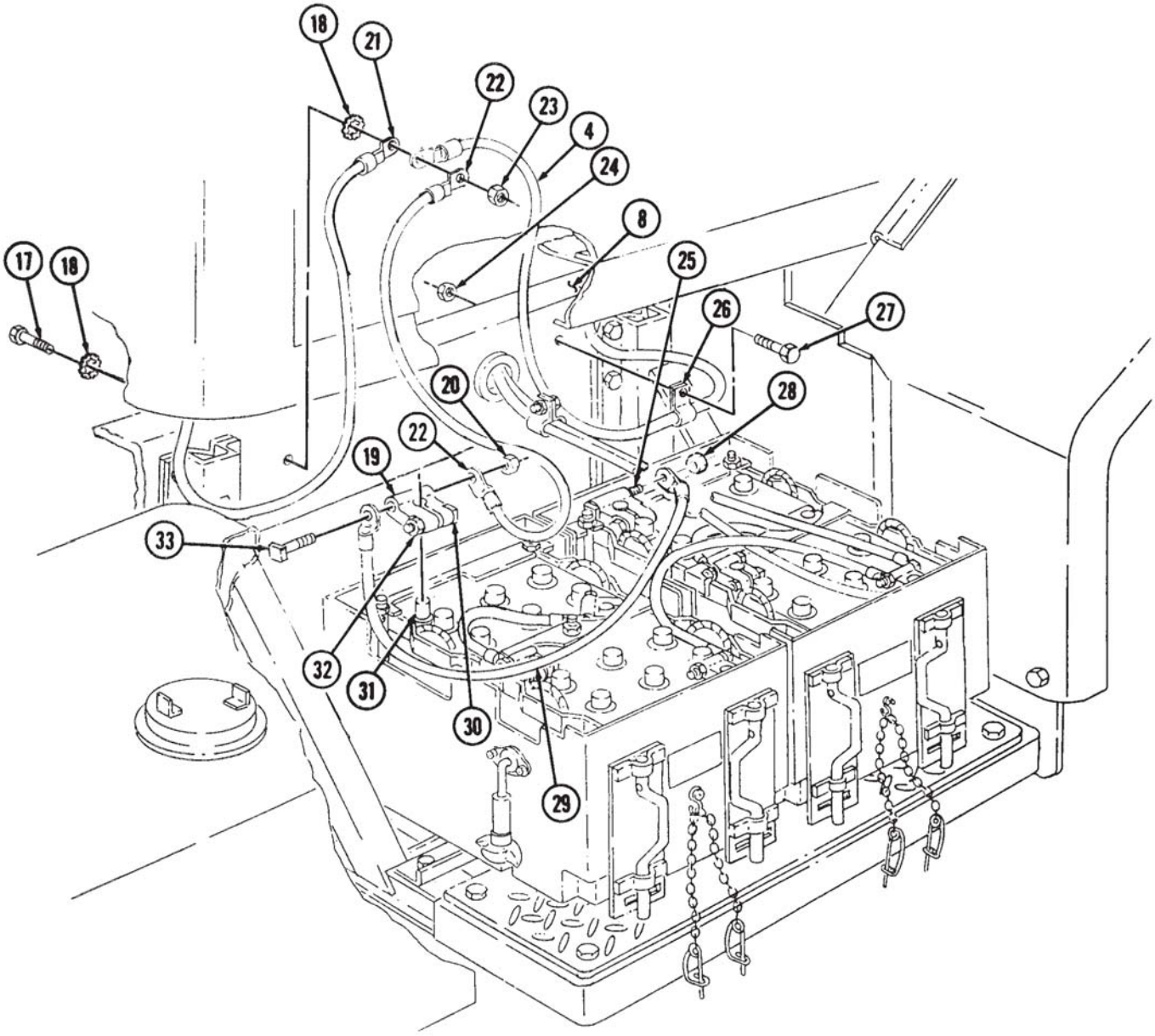

4-48. BATTERY CABLES AND CLAMPS REPLACEMENT (Contd)

i. Battery-to-Battery Cable Installation

1. Apply light coat of GAA grease to terminal clamps (3).
2. Position two terminal clamps (3) and cable (2) on two battery posts (7) and tighten two nuts (4) and screws (5).

j. Ground Cable Connection

1. Apply light coat of GM grease to terminal clamp (14).
2. Install terminal clamp (14) on battery post (12). Tighten nut (13) and screw (15).
3. Push each battery box (8) on running board (11) and back into stowage position.
4. Install two safety pins (9) in handles (10).
5. Install upper running board (1) on battery boxes (8) with two catches (6).

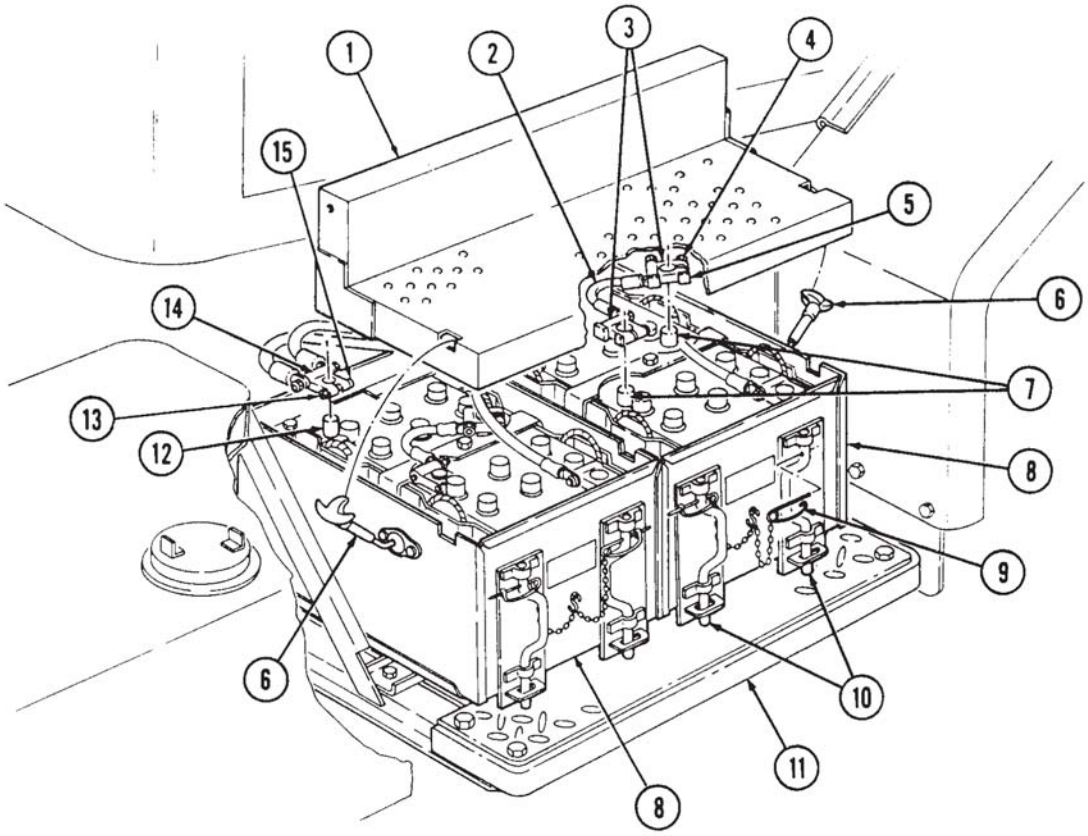

FOLLOW-ON TASK: Install cab tunnels (para. 11-30).

4-49. BATTERY AND BATTERY BOX REPLACEMENT

THIS TASK COVERS:

a. Batteries and Battery Box Removal
b. Battery and Battery Box Servicing
c. Batteries and Battery Box Installation

INITIAL SETUP

APPLICABLE MODELS
All

MATERIALS/PARTS
Twenty locknuts

PERSONNEL REQUIRED
Two

REFERENCES (TM)
TM 9-2320-260-10
TM 9-2320-260-20P
TM 9-6140-200-14

EQUIPMENT CONDITION
- Parking brake set (TM 9-2320-260-10).
- Battery cables removed from batteries (para. 4-48).

GENERAL SAFETY INSTRUCTIONS
- Wear safety goggles and rubber gloves, and do not smoke when performing battery maintenance.
- Remove all jewelry.
- When removing battery cables, disconnect ground cable first.

WARNING

- Battery acid (electrolyte) is extremely harmful. Always wear safety goggles and rubber gloves when performing battery maintenance. Severe injury will result if acid contacts eyes or skin.
- Do not smoke, have open flame, or make sparks when performing battery maintenance. Batteries may explode, causing severe injury to personnel.
- Remove all jewelry such as rings, dog tags, bracelets, etc. If jewelry or disconnected battery ground cable contacts battery post, a direct short can result, causing damage to equipment or severe injury to personnel.
- When removing battery cables, disconnect ground cable first. Do not allow tools to come in contact with vehicle when disconnecting cable clamps. A direct short can result, causing instant heating of tools, tool damage, battery damage, battery explosion, or severe injury to personnel.

4-49. BATTERY AND BATTERY BOX REPLACEMENT (Contd)

a. Batteries and Battery Box Removal

NOTE

This procedure covers only two batteries and battery boxes. Repeat steps 1 and 2 for remaining batteries.

1. Remove five nuts (2), washers (3), retainer (1), pushnuts (4), two batteries (6), and five J-bolts (5) from battery box (7).
2. Remove battery box (7) from battery box support (9) and running board (8).

b. Battery and Battery Box Servicing

For battery servicing instructions, refer to TM 9-6140-200-14.

c. Batteries and Battery Box Installation

1. Install battery box (7) on battery box support (9) and running board (8).
2. Position five J-bolts (5) and two batteries (6) in battery box (7) and install with five pushnuts (4), retainer (1), five J-bolts (5), washers (3), and nuts (2).

4-49. BATTERY AND BATTERY BOX REPLACEMENT (Contd)

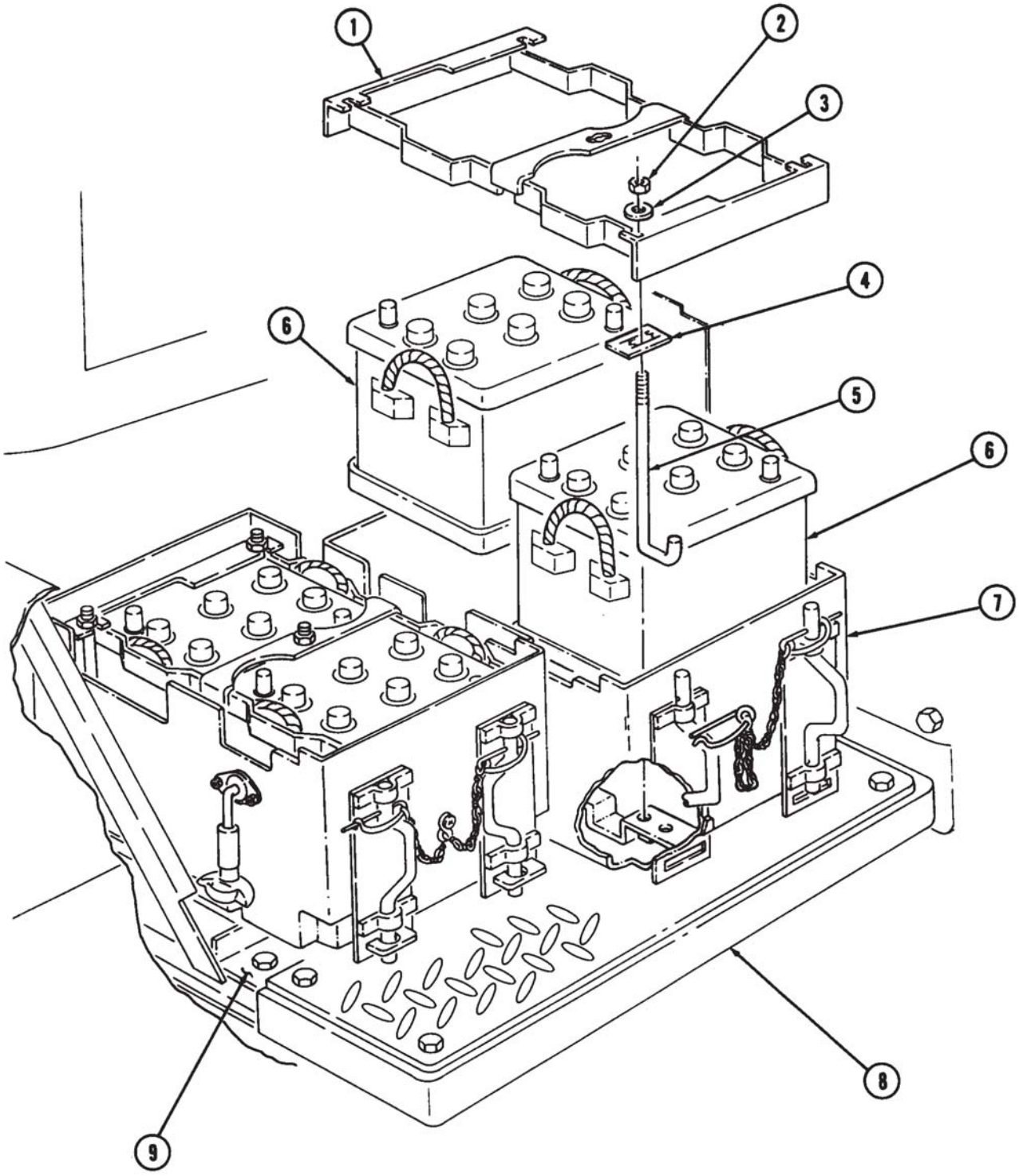

FOLLOW-ON TASK: Install battery cables on batteries (para. 4-48).

4-50. BATTERY BOX SUPPORTS REPLACEMENT

THIS TASK COVERS:

a. Removal b. Installation

INITIAL SETUP

APPLICABLE MODELS
All

MATERIALS/PARTS
Twenty locknuts

REFERENCES (TM)
TM 9-2320-260-10
TM 9-2320-260-20P

EQUIPMENT CONDITION
- Parking brake set (TM 9-2320-260-10).
- Battery and battery box removed (para. 4-49).

a. Removal

1. Remove four locknuts (11), screws (9), and running board (10) from two battery box hangers (7). Discard locknuts (11).
2. Remove two locknuts (3), screws (5), and splash shield (4) from battery box hangers (7). Discard locknuts (3).
3. Remove six locknuts (12), screws (8), and battery box support (6) from two battery box hangers (7). Discard locknuts (12).
4. Remove eight locknuts (1), screws (13), and two battery box hangers (7) from right- hand frame rail (2). Discard locknuts (1).

b. Installation

1. Install two battery box hangers (7) on right-hand frame rail (2) with eight screws (13) and new locknuts (1).
2. Install battery box support (6) on two battery box hangers (7) with six screws (8) and new locknuts (12).
3. Install splash shield (4) on battery box hanger (7) with two screws (5) and new locknuts (3).
4. Install running board (10) on two battery box hangers (7) with four screws (9) and new locknuts (11).

4-50. BATTERY BOX SUPPORTS REPLACEMENT (Contd)

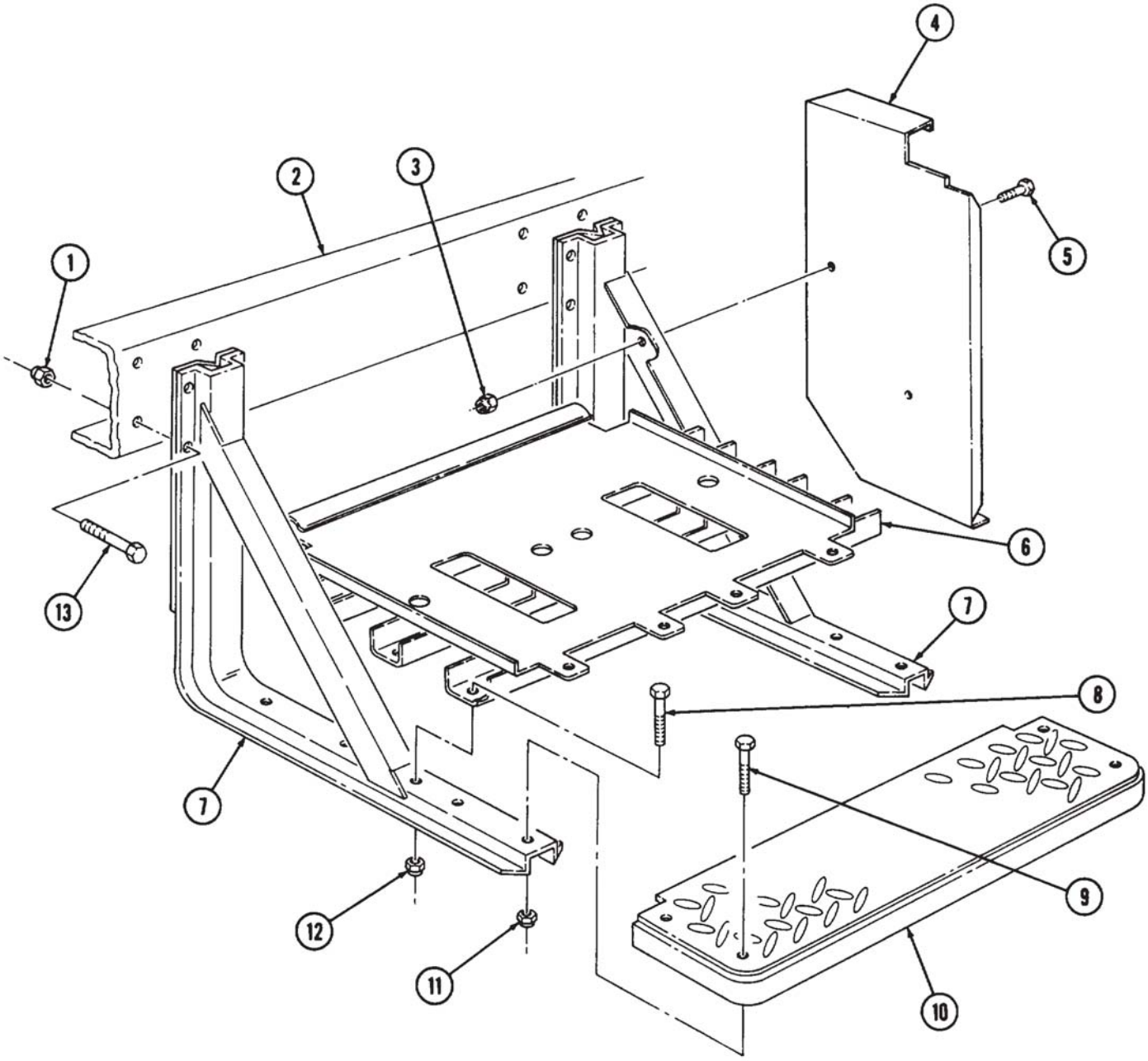

FOLLOW-ON TASK Install battery and battery box (para. 4-49).

Section VI. WIRING CIRCUITS AND HARNESS MAINTENANCE

4-51. WIRING CIRCUITS AND HARNESSES MAINTENANCE INDEX

PARA. NO.	TITLE	PAGE NO.
4-52.	Wiring Harness Repair	4-106
4-53.	Floodlight Wiring Harness Replacement	4-110
4-54.	Microbrake Lock Wiring Replacement	4-116
4-55.	Warning Light Wiring Replacement	4-118
4-56.	Slave Receptacle Replacement	4-120

4-52. WIRING HARNESS REPAIR

THIS TASK COVERS:

a. Terminal-Type Cable Connector Repair
b. Plug End Cable Connector Repair
c. Receptacle Cable Connector (With Sleeve) Repair
d. Plug Assembly Repair
e. Receptacle Assembly Repair

INITIAL SETUP

APPLICABLE MODELS
All

MATERIALS/PARTS
Solder (Appendix C, Item 28)
Tape, electrical (Appendix C, Item 31)

REFERENCES (TM)
TM 9-2320-260-10
TM 9-2320-260-20P
TM 9-237

EQUIPMENT CONDITION
- Parking brake set (TM 9-2320-260-10).
- Battery ground cable disconnected (para. 4-48).

GENERAL SAFETY INSTRUCTIONS
Do not wear jewelry when repairing harness.

WARNING

Do not wear jewelry when repairing harnesses. Injury to personnel may result if circuit is suddenly energized.

NOTE

If a wiring harness is damaged beyond repair, notify your supervisor for replacement.

4-52. WIRING HARNESS REPAIR (Contd)

a. Terminal-Type Cable Connector Repair

1. Strip insulation (1) from cable (2) equal to depth of terminal well (4).
2. Slide insulator (3) over cable (2).
3. Insert cable (2) into terminal well (4) and crimp terminal well (4) tightly.
4. Slide insulator (3) over crimped end of terminal (5).

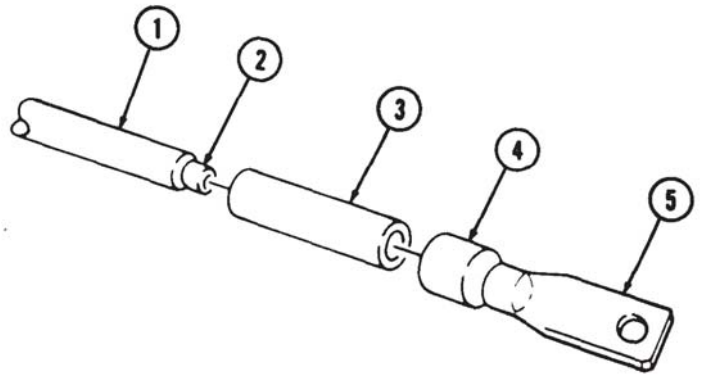

b. Plug End Cable Connector Repair

1. Strip insulation (6) from cable (7) equal to depth of ferrule well (10).
2. Slide shell (8) over cable (7).
3. Insert cable (7) into ferrule well (10) and crimp ferrule well (10) tightly.
4. Place C-clip (9) over crimped junctions at terminal (11).
5. Slide shell (8) over C-clip (9) and terminal (11).

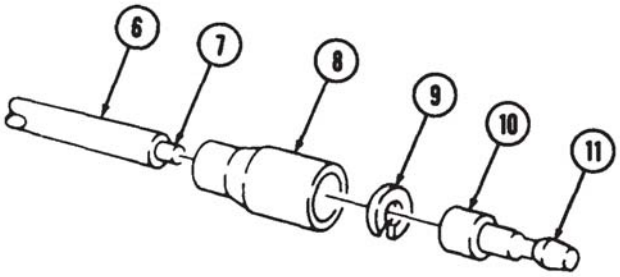

4-52. WIRING HARNESS REPAIR (Contd)

c. Receptacle Cable Connector (With Sleeve) Repair

1. Slide shell (3) and sleeve (4) over cable (1).
2. Strip insulation from cable (1) equal to depth of terminal well (5).
3. Insert conductor (2) into terminal well (5) and crimp terminal well (5) tightly.
4. Slide sleeve (4) and shell (3) over terminal (6).

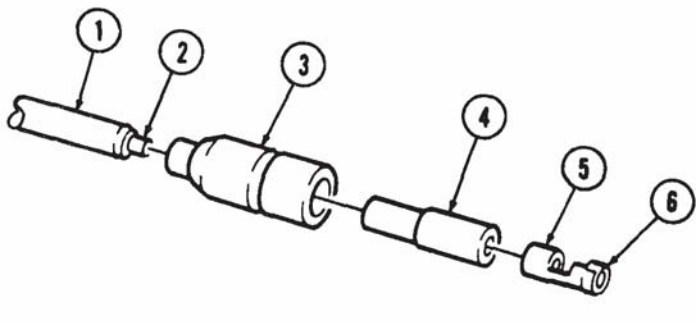

d. Plug Assembly Repair

NOTE

Refer to TM 9-237 for soldering instructions.

1. Slide retaining nut (8) over cable (7).
2. Strip covering from cable (7), exposing leads (9).
3. Insert leads (9) through holes in grommet (14).
4. Trim leads (9) to even length from face of grommet (14).
5. Strip insulation from each lead (9) equal to depth of solder wells (11) on inserts (12).
6. Solder conductors (10) in solder wells (11) of inserts (12).
7. Seat leads (9) and inserts (12) in grommet (14) and install grommet (14) in shell assembly (13).
8. Thread retaining nut (8) on shell assembly (13) until seated.

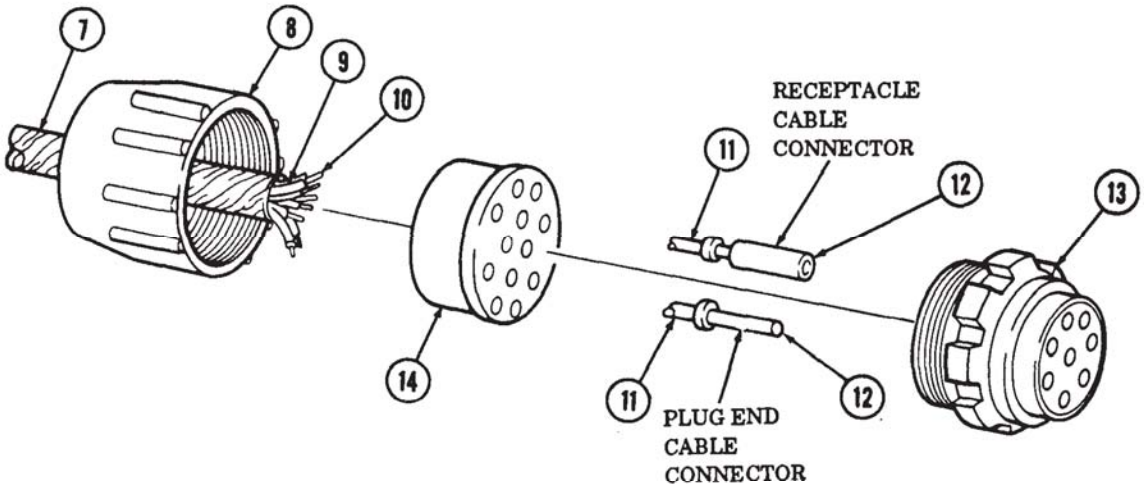

4-52. WIRING HARNESS REPAIR (Contd)

e. Receptacle Assembly Repair

NOTE

Refer to TM 9-237 for soldering instructions.

1. Slide retaining nut (16) over cable (15).
2. Strip covering from cable (15), exposing leads (17).
3. Insert leads (17) through holes in grommet (22).
4. Trim leads (17) to even length from face of grommet (22).
5. Strip insulation from each lead (17) equal to depth of solder wells (19) on inserts (20).
6. Solder conductors (18) in solder wells (19) of inserts (20).
7. Seat leads (17) and inserts (20) in grommet (22) and install in receptacle assembly (21).
8. Thread retaining nut (16) on receptacle assembly (21) until seated.

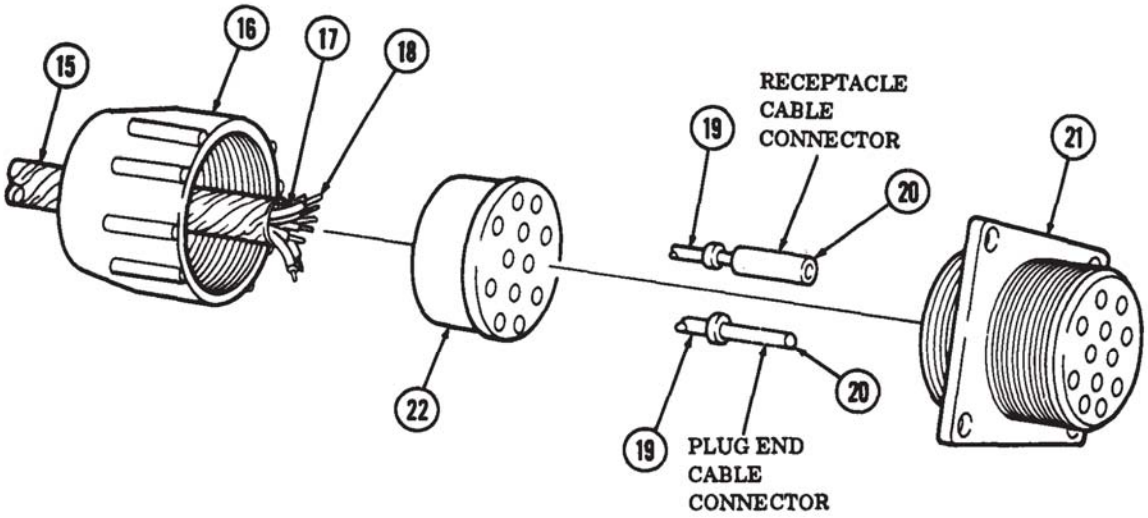

FOLLOW-ON TASK: Connect battery ground cable (para. 4-48).

4-53. FLOODLIGHT WIRING HARNESS REPLACEMENT

THIS TASK COVERS:

a. Removal **b. Installation**

INITIAL SETUP

APPLICABLE MODELS
M816, M819, M821

MATERIALS/PARTS
Ten locknuts
Three lockwashers

REFERENCES (TM)
TM 9-2320-260-10
TM 9-2320-260-20P

EQUIPMENT CONDITION
- Parking brake set (TM 9-2320-260-10).
- Hood raised and secured (TM 9-2320-260-10).
- Toolbox removed (para. 11-29).
- Battery ground cable disconnected (para. 4-48).

NOTE

Tag all wires for installation.

a. Removal

1. Disconnect leads (3) and (5) from connectors (4).

NOTE

Assistant will help with steps 2 and 3.

2. Remove two locknuts (1), screws (14), retainer (13), grommet (6), and lead (5) from firewall (2). Discard locknuts (1).
3. Remove three locknuts (9), lockwashers (10), screws (7), clamps (8), and floodlight wiring harness (12) from cab floor (11). Discard locknuts (9) and lockwashers (10).

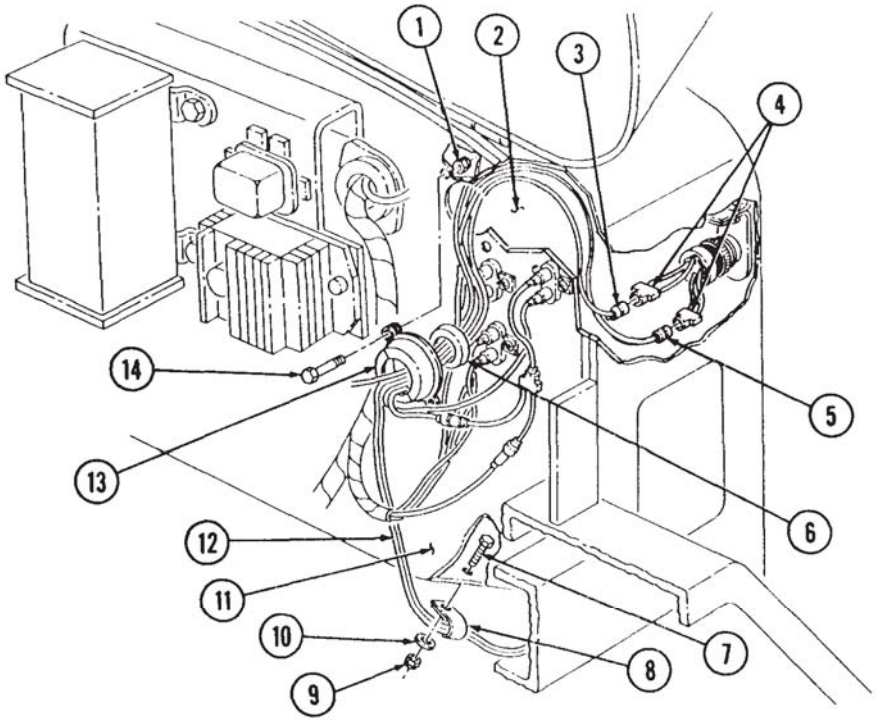

4-53. FLOODLIGHT WIRING HARNESS REPLACEMENT (Contd)

4. Remove four locknuts (17), screws (20), clamps (19), and floodlight wiring harness (12) from frame rail (18). Discard locknuts (17).
5. Disconnect lead (15) from floodlight wiring harness (12).
6. Remove locknut (24), screw (16), clip (25), clamp (22), and air line (21) from crossmember (23). Discard locknut (24).

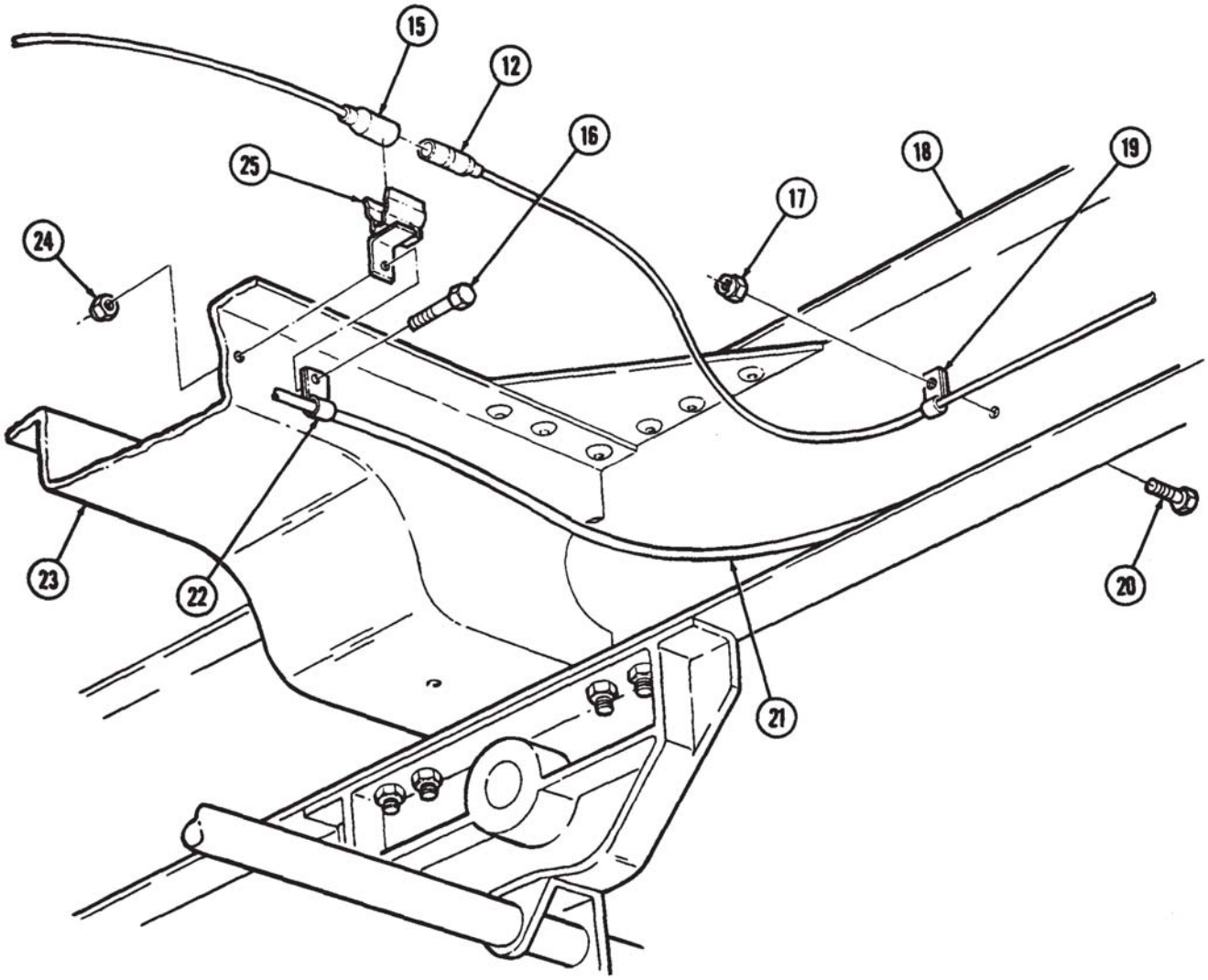

4-53. FLOODLIGHT WIRING HARNESS REPLACEMENT (Contd)

7. Disconnect leads (11) from contact plate leads (4).
8. Disconnect leads (6) from leads (5).
9. Disconnect leads (2) and (7) from two floodlights (1).
10. Remove three screws (13), clamps (12), and harness (3) from gondola (14).
11. Remove six screws (8), straps (9), and harness (3) from turntable support (10).
12. Remove four screws (15), six clamps (16), and harness (3) from turntable support (10).

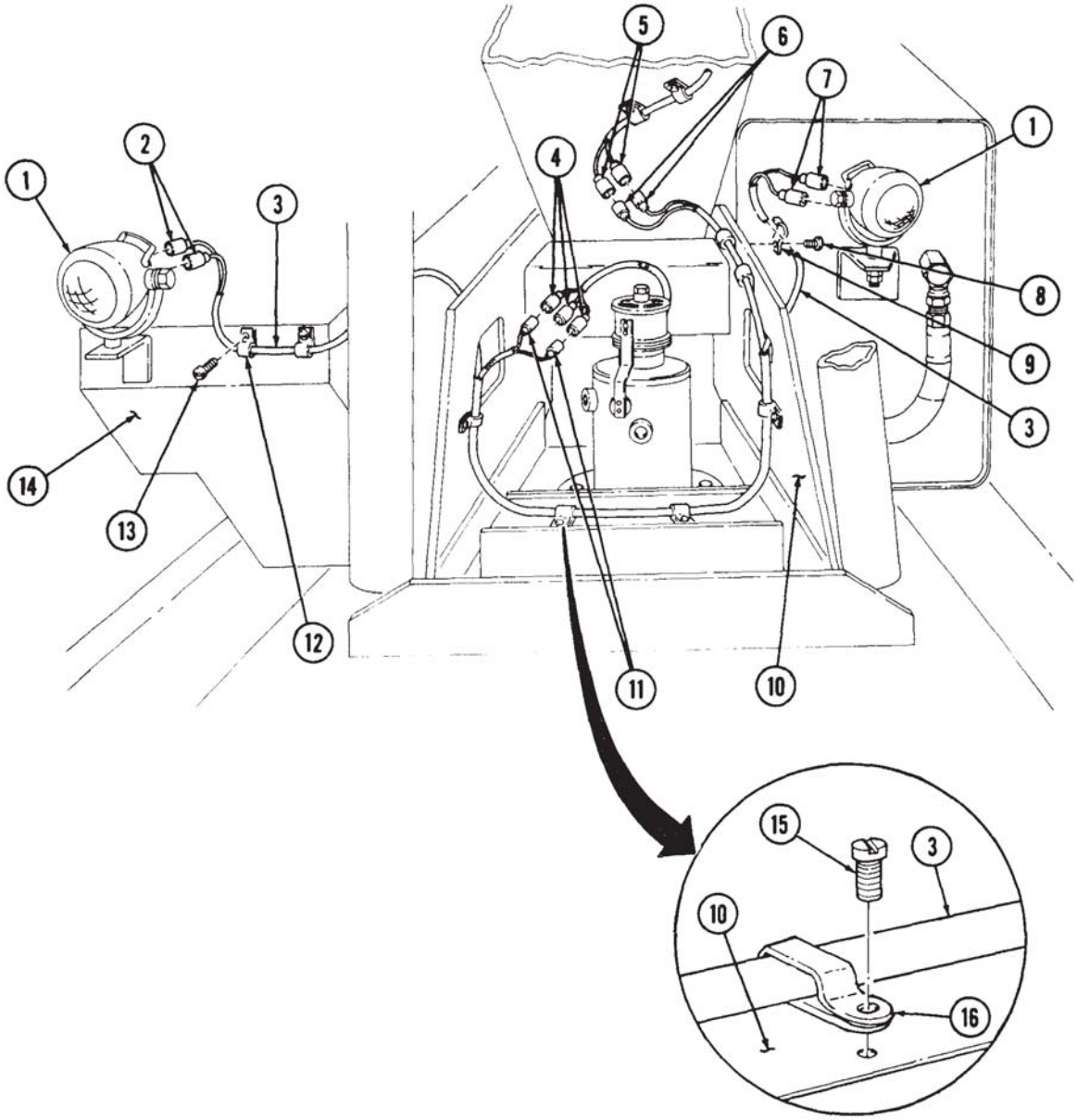

4-53. FLOODLIGHT WIRING HARNESS REPLACEMENT (Contd)

13. Remove ten screws (22), clamps (23), and harness (19) from crane boom (17).
14. Disconnect leads (21) from floodlight (18).

b. Installation

1. Route harness (19) along crane boom (17), over roller (20), and connect two leads (21) to floodlight (18).
2. Install harness (19) on crane boom (17) with ten clamps (23) and screws (22).
3. Connect leads (5) to harness leads (6).

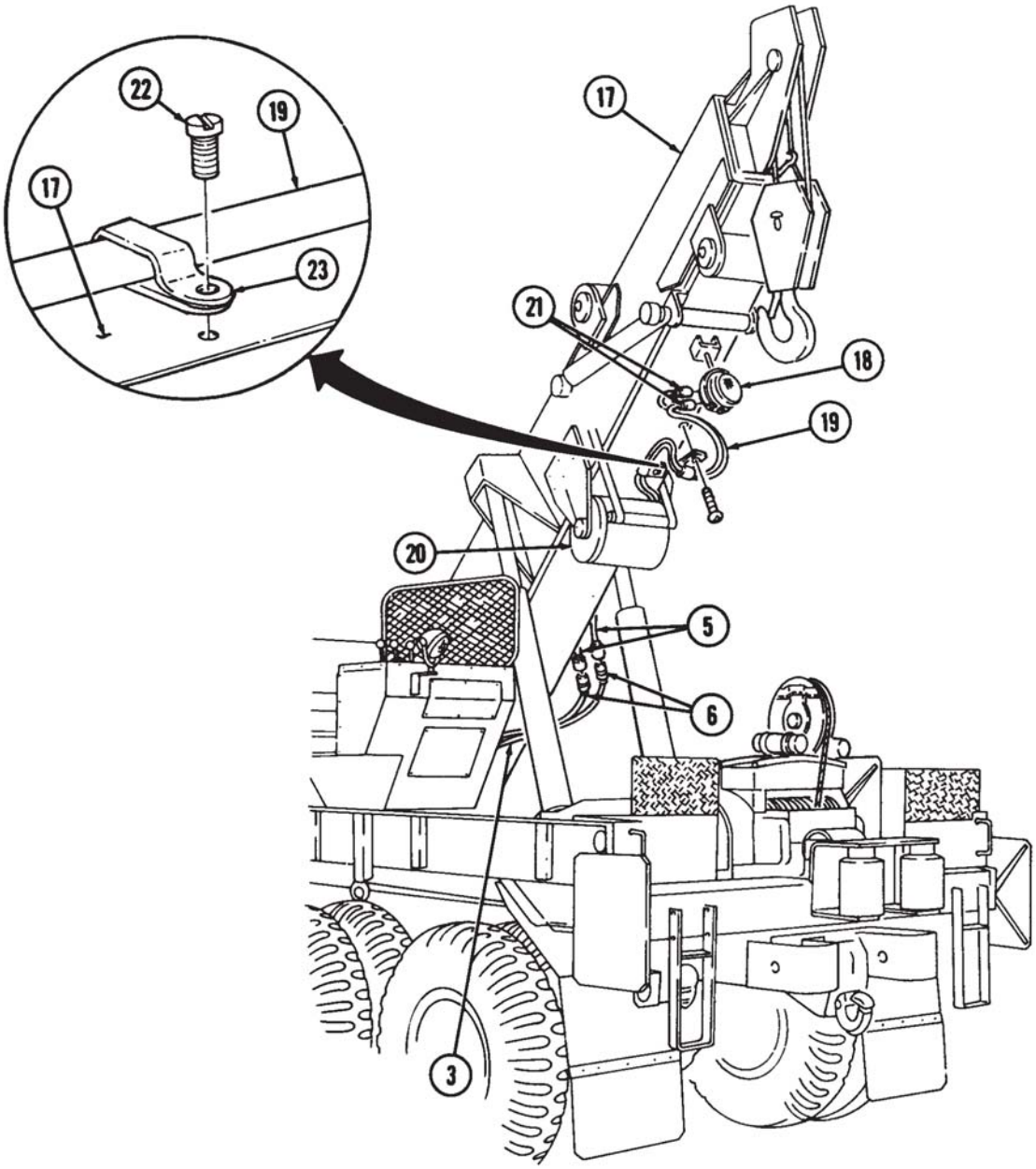

4-53. FLOODLIGHT WIRING HARNESS REPLACEMENT (Contd)

4. Route harness (3) through turntable support (9), around gondola (13), and connect leads (2) to floodlight (1).
5. Connect leads (10) to contact plate leads (4).
6. Connect leads (5) to floodlight (6).
7. Install harness (3) on gondola (13) with three clamps (11) and screws (12).
8. Install harness (3) on turntable support (9) with six straps (8) and screws (7).
9. Install harness (3) to inside of turntable support (9) with six clamps (15) and four screws (14).

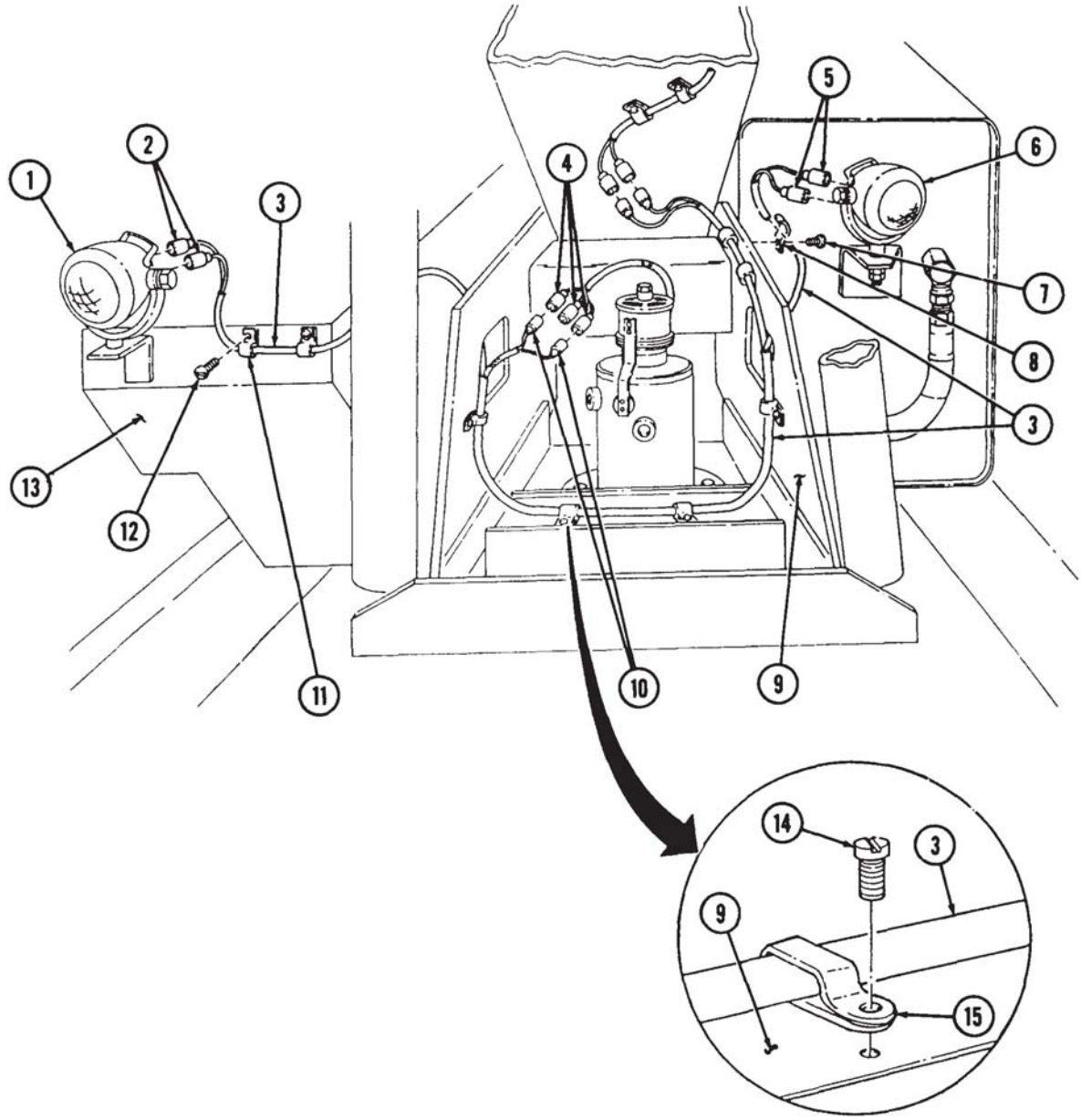

4-53. FLOODLIGHT WIRING HARNESS REPLACEMENT (Contd)

10. Connect floodlight wiring harness (17) to connector (16).
11. Install clip (25) on crossmember (23) with screw (21) and new locknut (24).
12. Install connector (16) on clip (25).
13. Route floodlight wiring harness (17) along frame rail (22) and under cab (31).
14. Insert floodlight wiring harness (17) through retainer (38), grommet (30), and hole in firewall (27).
15. Connect leads (28) and (17) to connectors (29).

NOTE

Assistant will help with steps 16 and 17.

16. Place grommet (30) in retainer (38) and install on firewall (27) with two screws (39) and new locknuts (26).
17. Install floodlight wiring harness (17) and lead (37) on cab floor (36) with three clamps (33), screws (32), new lockwashers (35), and new locknuts (34).
18. Install floodlight wiring harness lead (17) to frame rail (22) with four clamps (19), screws (20), and new locknuts (18).

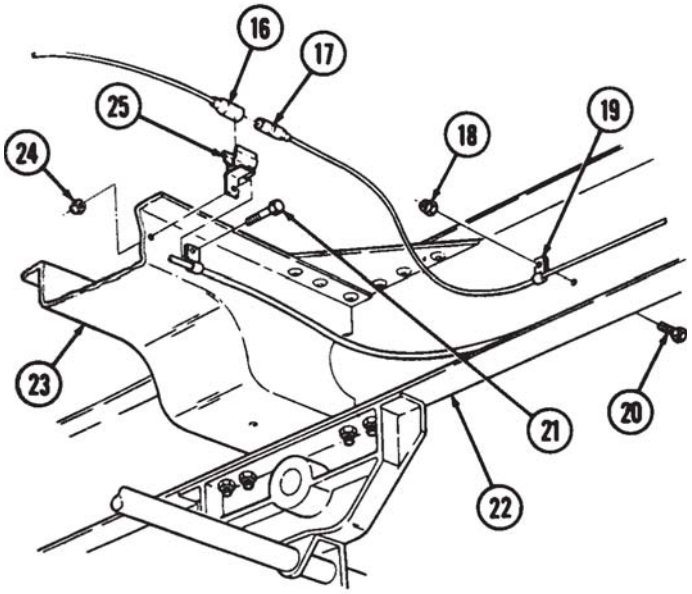

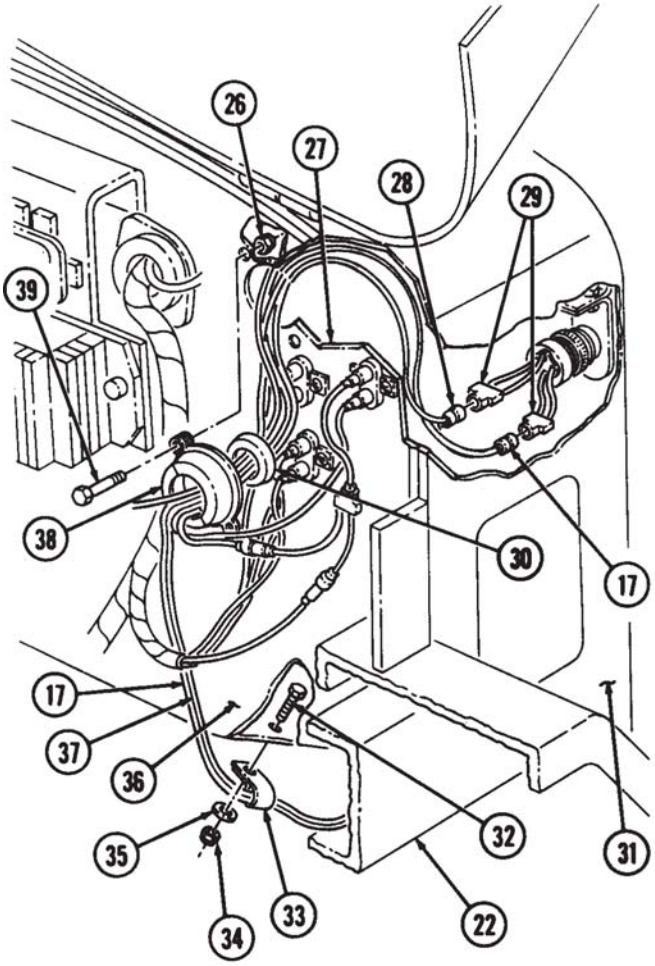

FOLLOW-ON TASKS:Ž Install toolbox (para. 11-29).
- Connect battery ground cable (para. 4-48).
- Check floodlight operation (TM 9-2320-260-10).

4-54. MICROBRAKE LOCK WIRING REPLACEMENT

THIS TASK COVERS:

a. Removal **b. Installation**

INITIAL SETUP

APPLICABI.E MODELS
M816, M819, M821

MATERIALS/PARTS
Five locknuts
Three lockwashers

REFERENCES (TM)
TM 9-2320-260-10
TM 9-2320-260-20P

EQUIPMENT CONDITION
- Parking brake set (TM 9-2320-260-10).
- Hood raised and secured (TM 9-2320-260-10).
- Toolbox removed (para. 11-29).
- Battery ground cable disconnected (para. 4-48).

NOTE

Tag all wires for installation.

a. Removal

1. Disconnect wires (2) and (3) from brake lock switch (1).
2. Disconnect wire (3) from connector lead (7).
3. Remove two locknuts (4), screws (15), retainer (14), grommet (6), and leads (2) and (3) from hole in firewall (5). Remove wire (3). Discard locknuts (4).

NOTE

Assistant will help with steps 4 and 5.

4. Disconnect wire (2) from brake lock (16).
5. Remove three locknuts (11), lockwashers (10), screws (8), and clamps (9) from wire (2), cab floor (13), and floodlight wire (12). Remove wire (2). Discard locknuts (11) and lockwaahers (10).

b. Installation

1. Insert wires (2) and (3) through hole in firewall (5) and connector to brake lock switch (l).
2. Connect wire (3) to connector lead (7).
3. Route wire (2) under cab floor (13) and connect to brake lock (16).

NOTE

Assistant will help with steps 4 and 5.

4. Install wire (2) and floodlight wire (12) on cab floor (13) with three clamps (9), screws (8), new lockwashers (10), and new locknuts (11).
5. Place grommet (6) and retainer (14) around all accessory wiring and install on firewall (5) with two screws (15) and new locknuts (4).

4-54. MICROBRAKE LOCK WIRING REPLACEMENT (Contd)

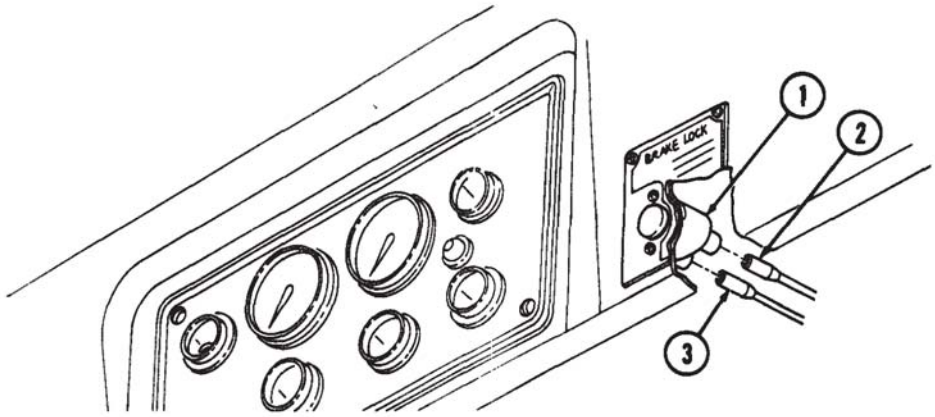

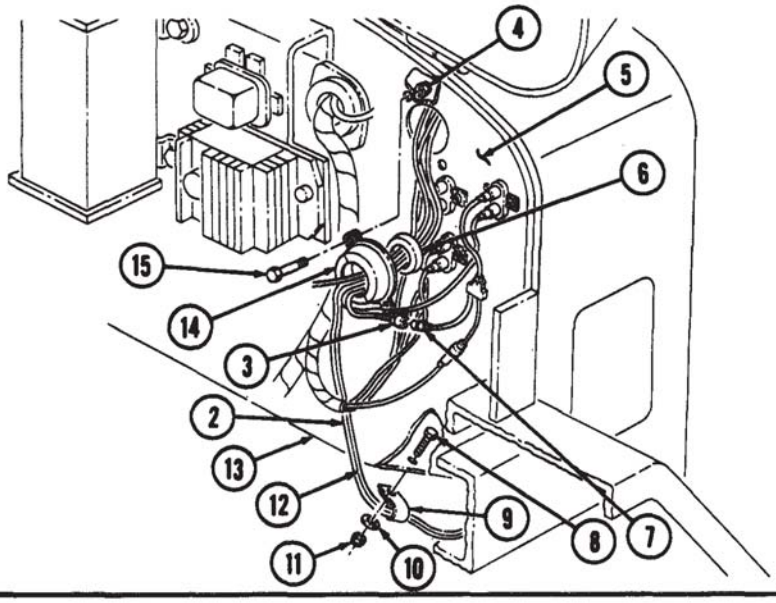

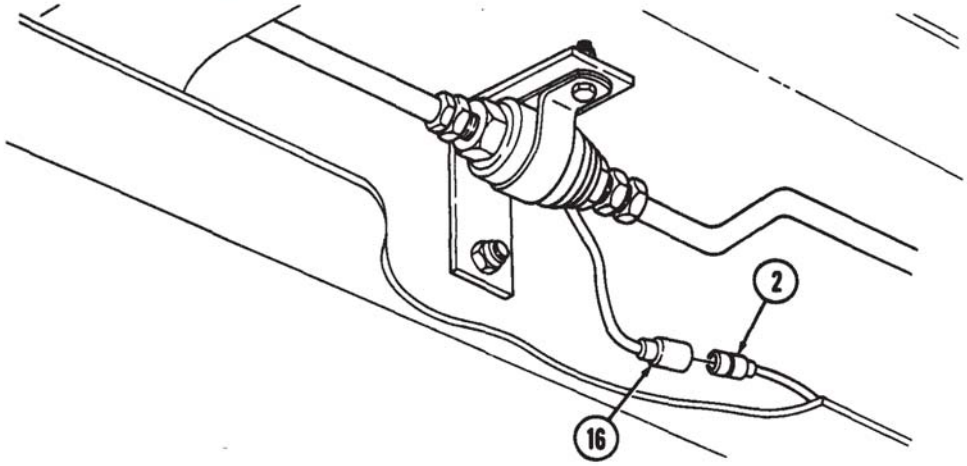

FOLLOW-ON TASKS:
- Install toolbox (para. 11-29).
- Connect battery ground cable (para. 4-48).
- Check operation of microbrake (TM 9-2320-260-10).

4-55. WARNING LIGHT WIRING REPLACEMENT

THIS TASK COVERS:

a. Removal

b. Installation

INITIAL SETUP

APPLICABLE MODELS
M816, M819

MATERIALS/PARTS
Six locknuts

REFERENCES (TM)
TM 9-2320-260-10
TM 9-2320-260-20P

EQUIPMENT CONDITION
- Parking brake set (TM 9-2320-260-10).
- Hood raised and secured (TM 9-2320-260-10).
- Battery ground cable disconnected (para. 4-48).

NOTE

Tag all wires for installation.

a. Removal

1. Disconnect wires (1) and (3) from warning light switch (2).
2. Disconnect receptacle (4) from flasher (6).
3. Disconnect wire (1) from circuit breaker (9).

NOTE

Assistant will help with step 4.

4. Remove two locknuts (7), screws (20), retainer (19), grommet (10), and receptacle (4) from hole in firewall (8). Remove wire (1). Discard locknuts (7).
5. Remove four locknuts (13), screws (16), and cover (14) from headlight bracket (15) and fender (17). Discard locknuts (13).
6. Disconnect wire (3) from warning light lead (12).
7. Pull wire (5) through grommet (18) in frame rail (11) and remove from vehicle.

b. Installation

1. Route wire (5) in approximate mounting location.
2. Insert wires (1) and (3) through hole in firewall (8).
3. Connect wire (1) to circuit breaker (9).
4. Connect receptacle (4) to flasher (6).
5. Connect wires (1) and (3) to warning light switch (2).
6. Insert wire (5) through grommet (18) in frame rail (11) and connect to warning light lead (12).
7. Install cover (14) on fender (17) and headlight bracket (15) with four screws (16) and new locknuts (13).

NOTE

Assistant will help with step 8.

8. Place grommet (10) and retainer (19) around all accessory wiring and install on firewall (8) with two screws (20) and new locknuts (7).

4-55. WARNING LIGHT WIRING REPLACEMENT (Contd)

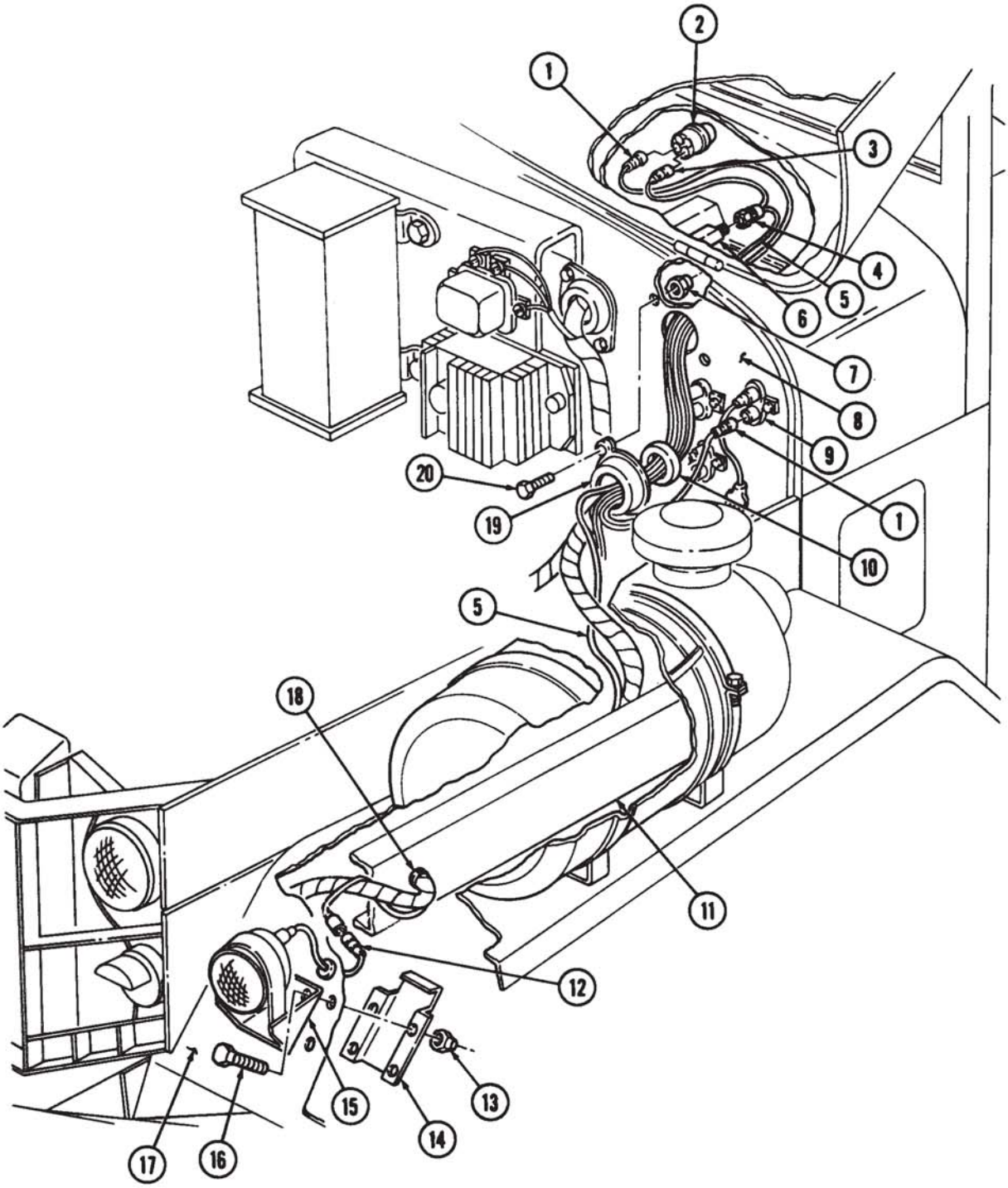

FOLLOW-ON TASK: Connect battery ground cable (para. 4-48).

4-56. SLAVE RECEPTACLE REPLACEMENT

THIS TASK COVERS:

a. Removal **b. Installation**

INITIAL SETUP

APPLICABLE MODELS

All

MATERIALS/PARTS

Locknut
Six lockwashers

REFERENCES (TM)

TM 9-2320-260-10
TM 9-2320-260-20P

EQUIPMENT CONDITION

- Parking brake set (TM 9-2320-260-10).
- Battery ground cable disconnected (para. 4-48).

GENERAL SAFETY INSTRUCTIONS

- Remove all jewelry.
- When removing battery cables, disconnect ground cable first.

WARNING

- Do not remove slave receptacle before disconnecting battery ground cables. If energized battery cables contact cab, a direct short will result and may cause injury to personnel.
- Remove all jewelry such as rings, dog tags, bracelets, etc. If jewelry or disconnected battery mound cable contact battery terminal, a direct short can result, causing instant heating of tools, injury to personnel, tool damage, battery damage, or battery explosion.

a. Removal

NOTE

Tag all wires for installation.

1. Remove locknut (11), screw (19), ground cables (7), (12), and (20), and two lockwashers (9) from rear battery box support hanger (13). Discard lockwashers (9) and locknut (11).
2. Remove nut (18), screw (14), and positive cables (15) and (17) from positive battery terminal (16).
3. Remove two screws (5), clamps (4) and (6), ground cable (7), and positive cable (17) from back cab panel support (3).
4. Remove four nuts (21), lockwashers (22), and screws (1) from slave receptacle (2). Discard lockwashers (21).
5. Remove two grommets (8) from cab floor (10) and pull slave receptacle (2) from cab (23).

b. Installation

1. Route ground cable (7) and positive cable (17) through cab (23) and cab floor (10).
2. Install two grommets (8) on ground cable (7) and positive cable (17) and install on cab floor (10).
3. Install slave receptacle (2) on cab (23) with four screws (1), new lockwashers (22), and nuts (21).
4. Install positive cables (15) and (17) on positive battery terminal (16) with screw (14) and nut (18).
5. Install ground cables (7), (12), and (20) on rear battery box support hanger (13) with screw (19), two new lockwashers (9), and new locknut (11).
6. Install ground cable (7) and positive cable (17) on back cab panel support (3) with clamps (4) and (6) and two screws (5).

4-56. SLAVE RECEPTACLE REPLACEMENT (Contd)

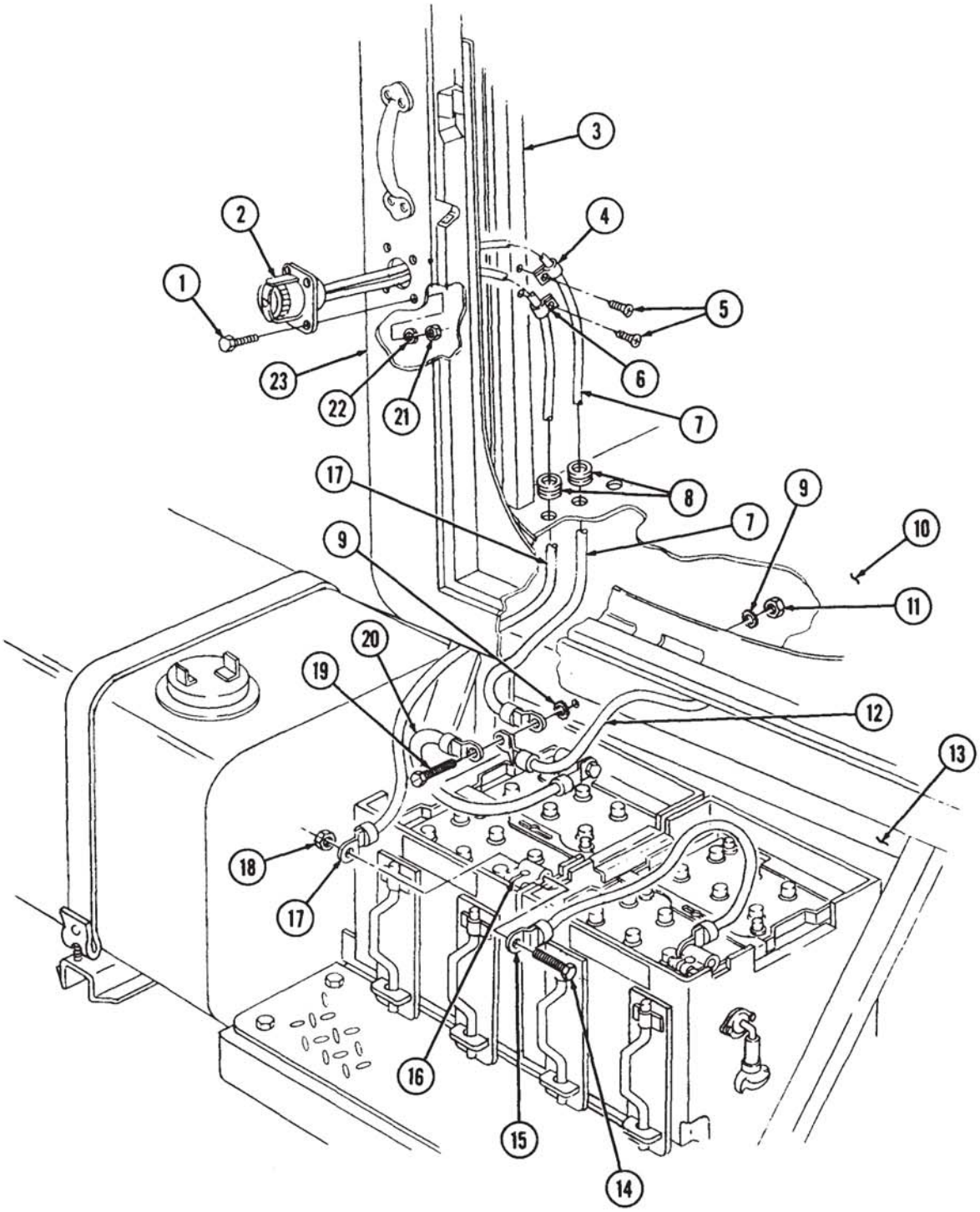

FOLLOW-ON TASK: Connect battery ground cable (para. 4-48).

CHAPTER 5
TRANSMISSION MAINTENANCE

5-1. TRANSMISSION MAINTENANCE INDEX

PARA. NO.	TITLE	PAGE NO.
5-2.	Transmission Breather Maintenance	5-1
5-3.	Transmission Gearshift Lever Knob and Boot Replacement	5-3

5-2. TRANSMISSION BREATHER MAINTENANCE

THIS TASK COVERS:

a. **Removal**
b. **Cleaning**
c. **Installation**

INITIAL SETUP

APPLICABLE MODELS
All

MATERIALS/PARTS
Rags (Appendix C, Item 22)
Drycleaning solvent (Appendix C, Item 29)

REFERENCES (TM)
TM 9-2320-260-10
TM 9-2320-260-20P

EQUIPMENT CONDITION
- Parking brake set (TM 9-2320-260-10).
- Cab intermediate tunnel removed (para. 11-30).

GENERAL SAFETY INSTRUCTIONS
Keep fire extinguisher nearby when using drycleaning solvent.

5-2. TRANSMISSION BREATHER MAINTENANCE (Contd)

a. Removal

1. Wipe area around transmission breather hole (2) with rag.
2. Remove transmission breather (1) from transmission housing (3).

b. Cleaning

WARNING

Drycleaning solvent is flammable and will not be used near open flame. Use only in well-ventilated places. Failure to do so may result in injury to personnel.

Clean transmission breather (1) with drycleaning solvent.

c. Installation

Install transmission breather (1) on transmission housing (3).

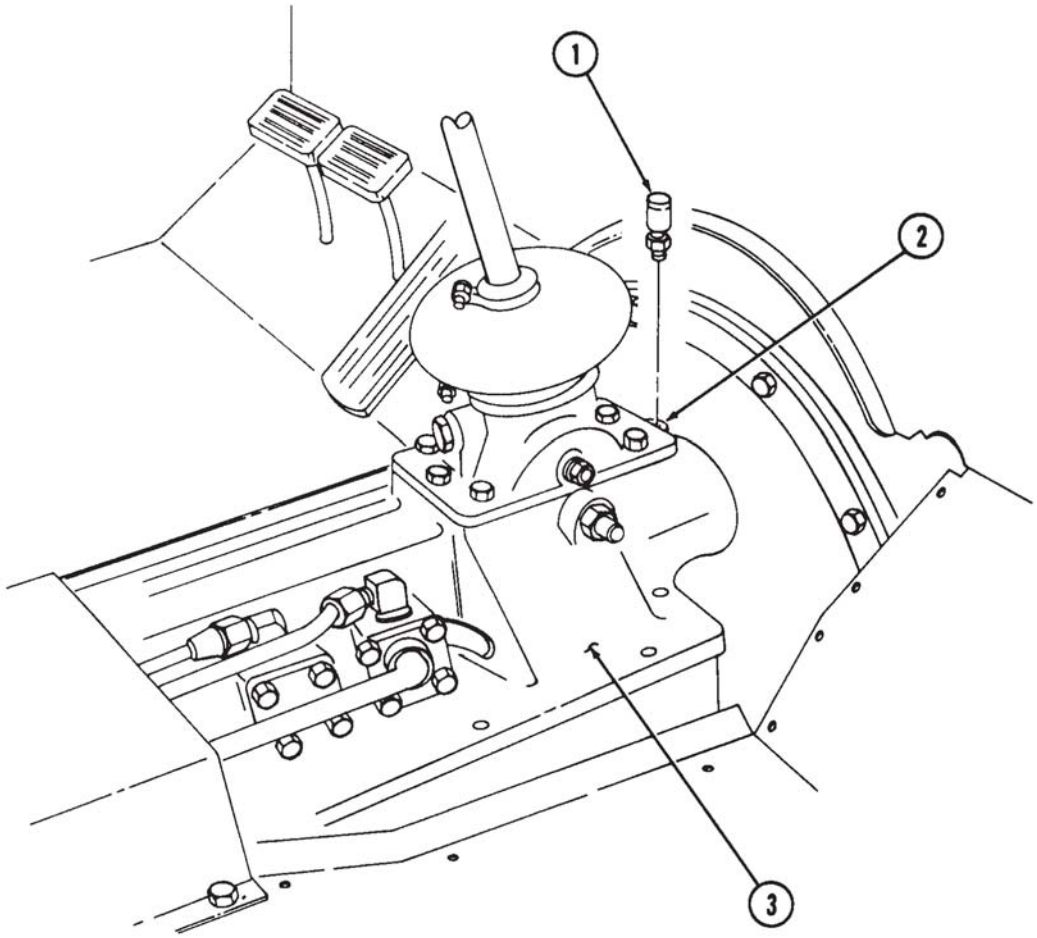

FOLLOW-ON TASK: Install cab intermediate tunnel (para. 11-30).

All

MATERIALS/PARTS

Two locknuts

TM 9-2320-260-10
TM 9-2320-260-20P

EQUIPMENT CONDITION

Parking brake set (TM 9-2320-260-10).

6-3. TRANSFER CASE DECLUTCH PIPING REPLACEMENT (Contd)

WARNING

Do not disconnect air lines before draining air reservoirs. Small parts under pressure may shoot out with high velocity, causing injury to personnel.

a. Removal

1. Disconnect tubes (4) and (5) from elbows (7) and (6) on transmission poppet valves (9).
2. Disconnect hose (19) from transfer air cylinder (14).
3. Disconnect hose (21) from elbow (16) on transfer case (15).
4. Remove locknut (17), screw (1), clamps (2) and (20), and tubes (4) and (5) from retaining plate (18). Discard locknut (17).
5. Remove tube (4) and adapter (23) from hose (19).
6. Remove tube (5) and adapter (22) from hose (21).
7. Remove screw-assembled lockwasher (3) and retaining plate (18) from transmission (8).
8. Disconnect hose (11) from elbows (10) and (12) on transmission poppet valves (9) and air line (13).
9. Remove elbows (6), (7), and (10) from transmission poppet valves (9).
10. Remove elbow (16) from transfer case (15).
11. Remove elbow (12) from air line (13).

b. Installation

1. Apply antiseize tape to male threads of elbows (6), (7), (10), (12), and (16), hoses (11), (19), and (21), and adapters (22) and (23).
2. Install elbow (12) on air line (13).
3. Install elbow (16) on transfer case (15).
4. Install elbows (6), (7), and (10) on transmission poppet valves (9).
5. Install adapter (22) and tube (5) on hose (21).
6. Install adapter (23) and tube (4) on hose (19).
7. Connect hose (21) to elbow (16) on transfer case (15).
8. Connect hose (19) on transfer air cylinder (14).
9. Connect tubes (4) and (5) to elbows (7) and (6) on transmission poppet valves (9).
10. Install retaining plate (18) on transmission (8) with new screw-assembled lockwasher (3).
11. Install tubes (4) and (5) on retaining plate (18) with clamps (2) and (20), screw (1), and new locknut (17).
12. Install hose (11) on elbows (10) and (12) on transmission poppet valves (9) and air line (13).

6-3. TRANSFER CASE DECLUTCH PIPING REPLACEMENT (Contd)

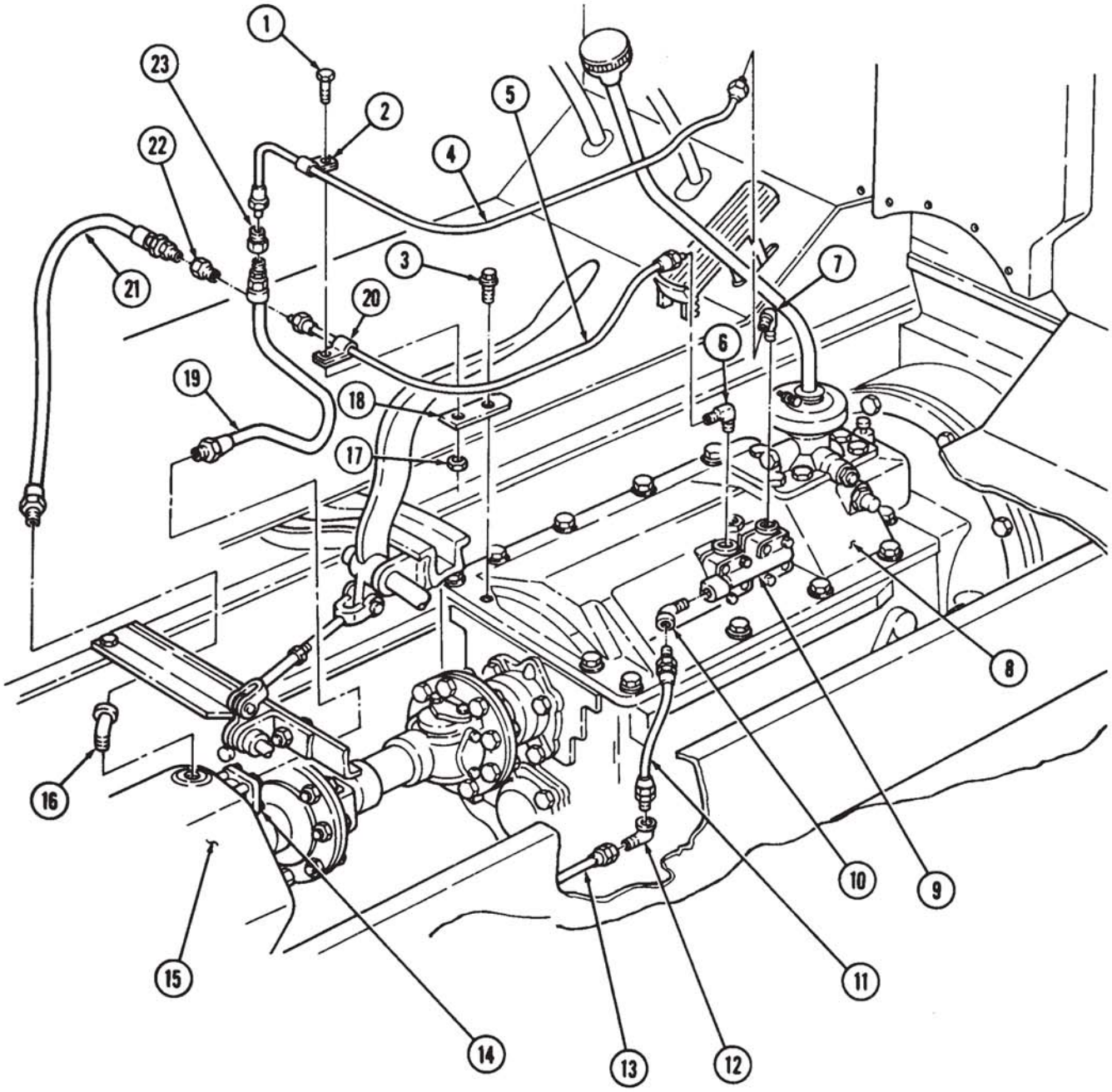

FOLLOW-ON TASKS: • Install driver's seat (para. 11-32).
• Install cab tunnel cover (para. 11-30).

6-4. TRANSFER CASE SHIFT LEVER AND CONTROL LINKAGE MAINTENANCE

THIS TASK COVERS:

a. Removal
b. Installation
c. Adjustment

INITIAL SETUP

APPUCABLE MODELS
All w/o transmission PTO

MATERIAI.S/PARTS
Five cotter pins
Two woodruff keys
Thirteen locknuts

REFERENCES (TM)
TM 9-2320-260-10
TM 9-2320-260-20P

EQUIPMENT CONDITION
Ž Parking brake set (TM 9-2320-260-10).
•Cab tunnels removed (para. 11-30).

a. Removal

1. Remove cotter pin (9) and washer (8) from shaft (7). Discard cotter pin (9).
2. Remove two cotter pins (12) and clevis pins (10) from transfer control lever (6) and relay lever (20). Remove adjusting rod (11). Discard cotter pins (12).
3. Remove lever (6) from shaft (7).
4. Remove locknut (1), screw (4), retainer (2), and shaft (7) from bracket (3). Discard locknut (1).
5. Remove two locknuts (5), screws (27), and bracket (3) from frame crossmember (26). Discard locknuts (5).
6. Remove two cotter pins (16) and clevis pins (14) from relay lever (20) and transfer shifter shifter (17). Remove rod (15). Discard cotter pins (16).
7. Remove two locknuts (21), washers, (22), screws (23), and relay levers (20) from shaft (32). Discard locknuts (21).
8. Remove two woodruff keys (18) from shaft (32). Discard woodruff keys (18).
9. Remove shaft (32) from bracket (31).
10. Remove four locknuts (19), screws (25), and bracket (31) from support T-bar (24). Discard locknuts (19).
11. Remove four locknuts (28), screws (30), and support T-bar (24) from frame rails (29). Discard locknuts (28).

b. Installation

1. Install support T-bar (24) on frame rails (29) with four new locknuts (28) and screws (30).
2. Install shaft (32) in bracket (31).
3. Install two new woodruff keys (18) on shaft (32).
4. Install two relay levers (20) on shaft (32) with two screws (23), washers (22), and new locknuts (21).
5. Install bracket (31) and shaft (32) on rear of support T-bar (24) with four screws (25) and new locknuts (19). Ensure that right relay lever (20) is pointing down.
6. Install rod (15) on relay lever (20) and transfer shifter shaft (17) with two clevis pins (14) and new cotter pins (16). Lock cotter pins (16).

6-4. TRANSFER CASE SHIFT LEVER AND CONTROL LINKAGE MAINTENANCE (Contd)

7. Position shaft (7) in bracket (3) and install retainer (2) on bracket (3) with screw (4) and new locknut (l). Turn shaft (7) as necessary to engage vertical slot of shaft (7) with retainer (2).
8. Install bracket (3) and shaft (7) on frame crossmember (26) with two screws (27) and new locknuts (5). Ensure free end of shaft (7) points to left side of vehicle.
9. Install transfer control lever (6), short end down, on left end of shaft (7) with washer (8) and new cotter pin (9). Lock cotter pin (9).
10. Loosen jamnut (13) on adjusting rod (11) and set clevis holes 8.75 in. (22.3 cm) apart. Do not tighten jamnut (13).
11. Install adiusting rod (11) on relay lever (20) and lower hole on transfer control lever (6) with two clevis pin; (10) ;nd new cotter pins (12). Lock cotter pins (12) at transfer control lever (6). Do not lock cotter pin (12) at relay lever (20) until adjustments in task c. are completed.

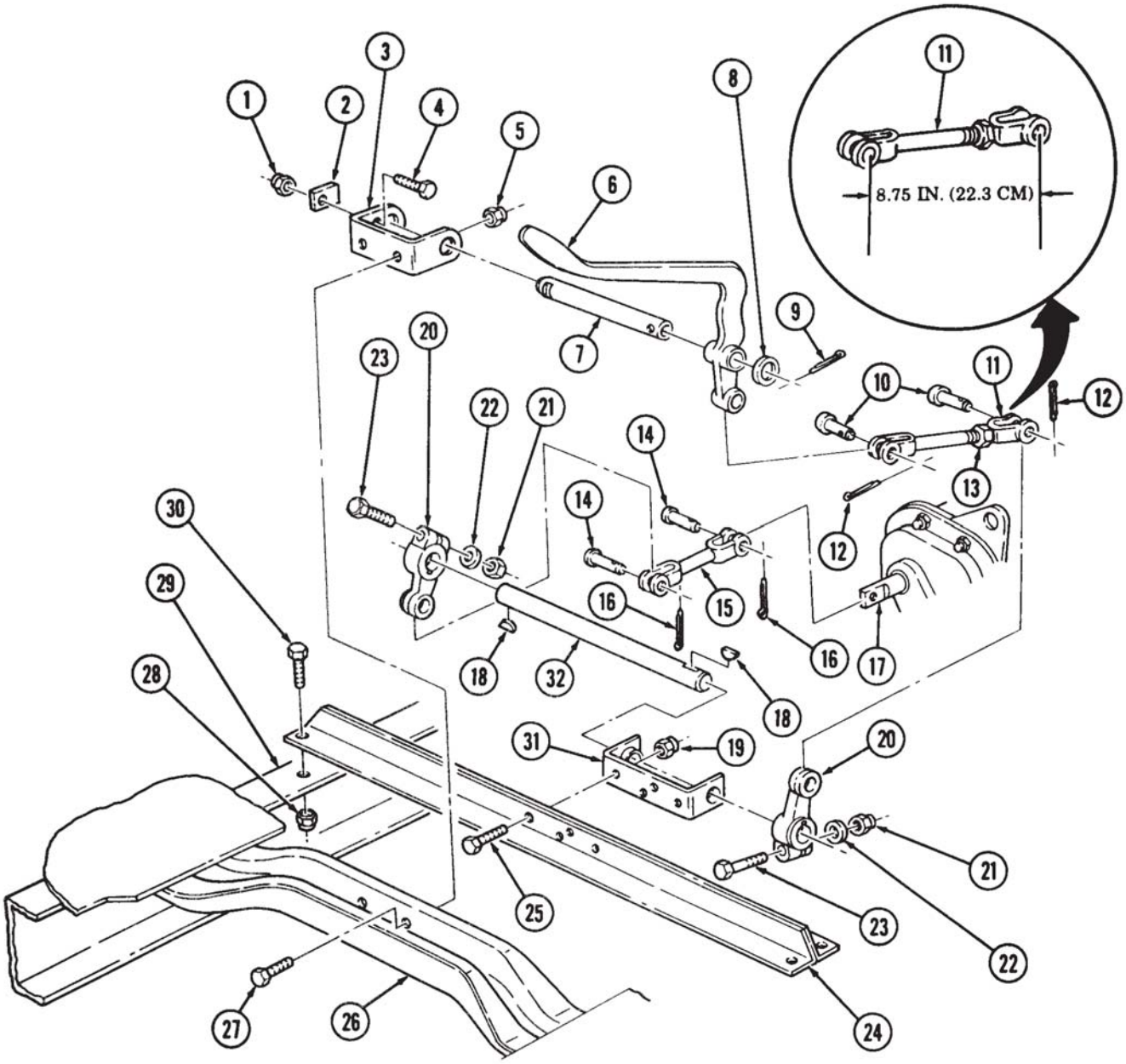

6-4. TRANSFER CASE SHIFT LEVER AND CONTROL LINKAGE MAINTENANCE (Contd)

c. Adjustment

1. Position tunnel cover (9) on cab floor (8).
2. Shift transfer control lever (1) to high and low range positions (TM 9-2320-260-10).
3. If control lever (1) hits rear tunnel cover (9) when shifting transfer case to low range, shorten adjusting rod (7). Remove tunnel cover (9) from cab floor (8). Back off jamnut (2) from yoke (4), Remove cotter pin (5) and clevis pin (3) from yoke (4) and relay lever (6). Turn yoke (4) clockwise to shorten adjusting rod (7). Install adjusting rod (7) on relay lever (6) with clevis pin (3) and cotter pin (5). Check for correct free travel of transfer control lever (1) in high and low range.
4. If control lever (1) hits companion seat when shifting transfer case to high range, lengthen adjusting rod (7). Remove tunnel cover (9) from cab floor (8). Back off jamnut (2) from yoke (4). Remove cotter pin (5) and clevis pin (3) from yoke (4) and relay lever (6). Turn yoke (4) counter-clockwise to lengthen adjusting rod (7). Install adjusting rod (7) on relay lever (6) with clevis pin (3) and cotter pin (5). Check for correct free travel of transfer control lever (1) in high and low range.
5. If travel is correct, tighten jamnut (2) against yoke (4) and lock cotter pin (5).

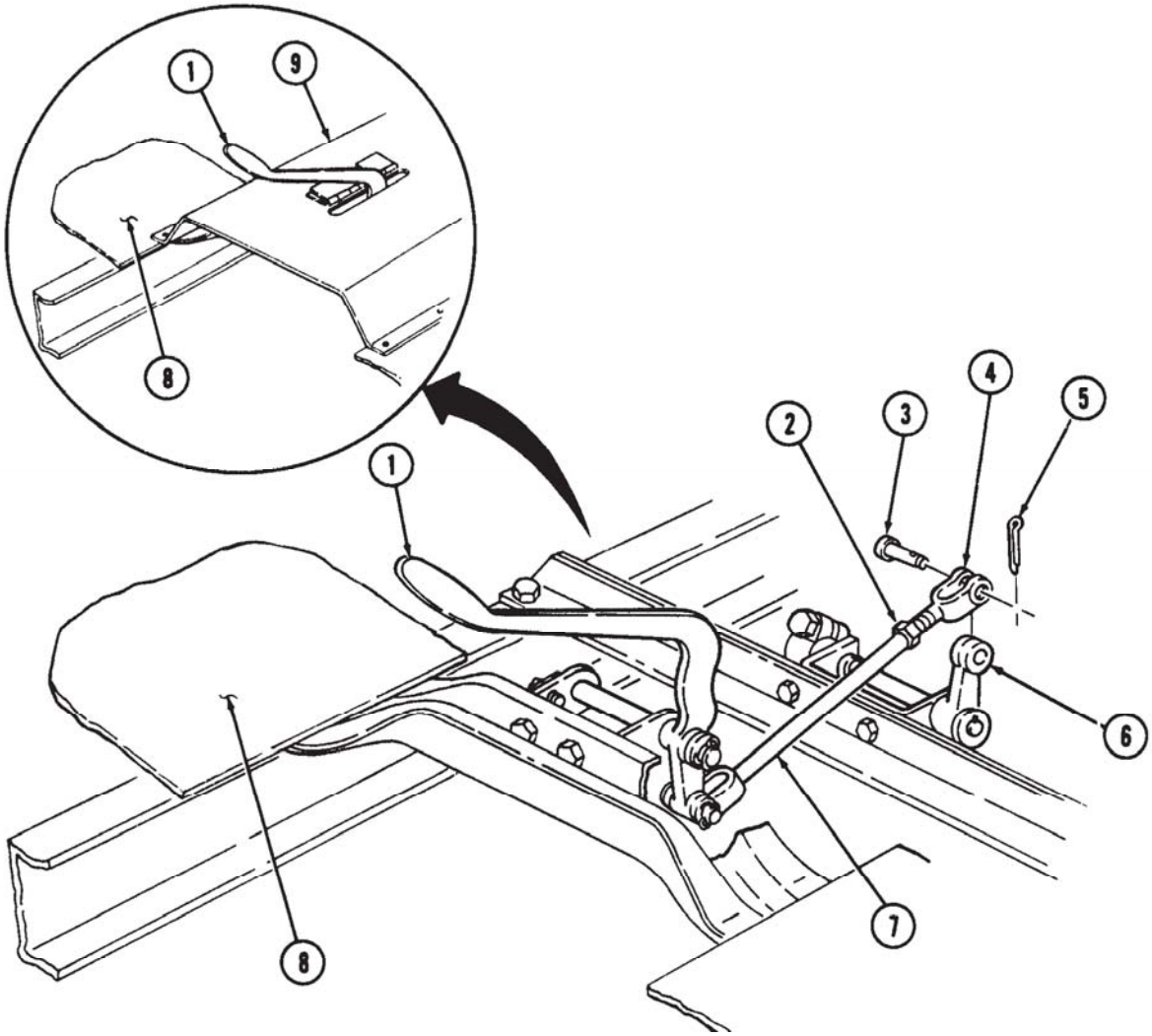

FOLLOW-ON TASK Install cab tunnels (para. 11-30).

6-5. TRANSFER CASE BREATHER MAINTENANCE

THIS TASK COVERS:

a. Removal
b. Cleaning
c. Installation

INITIAL SETUP

APPLICABLE MODELS
All

MATERIALS/PARTS
Rags (Appendix C, Item 22)
Drycleaning solvent (Appendix C, Item 29)

REFERENCES (TM)
TM 9-2320-260-10
TM 9-2320-260-20P

EQUIPMENT CONDITION
- Parking brake set (TM 9-2320-260-10).
- Cab tunnels removed (para. 11-30).

GENERAL SAFETY INSTRUCTIONS
Keep fire extinguisher nearby when using drycleaning solvent.

a. Removal

1. Wipe area around transfer breather (2) with rag.
2. Remove transfer breather (2) from transfer case (1).

b. Cleaning

WARNING

Drycleaning solvent is flammable and will not be used near open flame. Use only in well-ventilated places. Failure to do this may result in injury to personnel.

Clean transfer breather (2) with drycleaning solvent.

c. Installation

Install transfer breather (2) on transfer case (1).

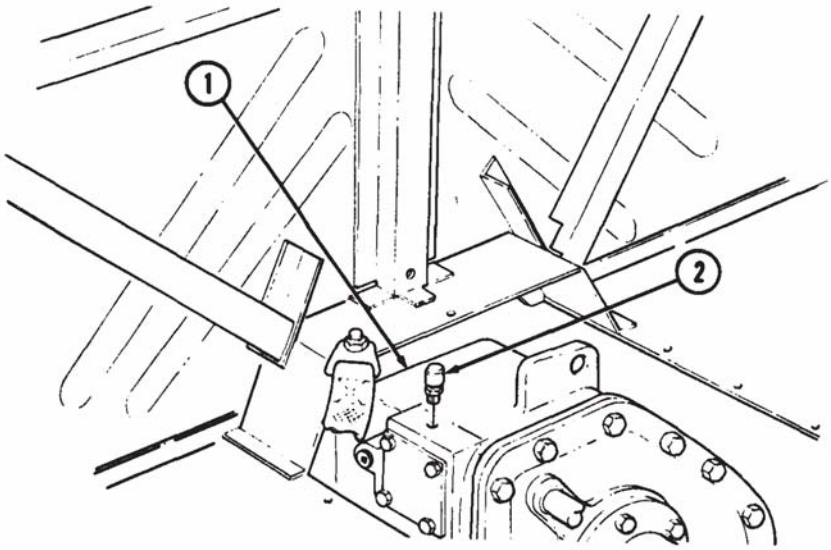

FOLLOW-ON TASK Install cab tunnels (para. 11-30).

CHAPTER 7
PROPELLER SHAFTS, AXLES, AND SUSPENSION SYSTEM MAINTENANCE

Section I. Propeller Shafts Maintenance (page 7-1)
Section II. Front and Rear Axle Maintenance (page 7-13)
Section III. Front and Rear Suspension Maintenance (page 7-27)

Section I. PROPELLER SHAFTS MAINTENANCE

7-1. PROPELLER SHAFTS MAINTENANCE INDEX

PARA. NO.	TITLE	PAGE NO.
7-2.	Propeller Shafts Replacement	7-1
7-3.	Propeller Shaft Replacement (Transfer-to-Center Bearing)	7-4
7-4.	Propeller Shaft Repair	7-6
7-5.	Universal Joint Maintenance	7-8
7-6.	Center Bearing Replacement	7-12

7-2. PROPELLER SHAFTS REPLACEMENT

THIS TASK COVERS:

a Transmission-to-Transfer Propeller Shaft Removal

b. Transmission-to-Transfer Propeller Shaft

c. Transfer-to-Forward-Rear Propeller Shaft Removal

d. Transfer-to-Forward-Rear Propeller Shaft Installation

INITIAL SETUP

APPLICABLE MODELS
All

MATERIALS/PARTS
Sixteen locknuts

PERSONNEL REQUIRED
Two

REFERENCES (TM)
LO 9-2320-260-12
TM 9-2320-260-10
TM 9-2320-260-20P

EQUIPMENT CONDITION
Parking brake set (TM 9-2320-260-10).

7-2. PROPELLER SHAFTS REPLACEMENT (Contd)

NOTE

- Most propeller shafts are replaced basically the same. This procedure is for the transmission-to-transfer propeller shaft.
- Both the Dana and Mechanic's brand propeller shafts are replaced basically the same. This procedure covers Dana brand propeller shafts.

a. Transmission-to-Transfer Propeller Shaft Removal

1. Chock wheels, release parking brake, and place the transmission in neutral (TM 9-2320-260-10).
2. Rotate propeller shaft (2) as necessary, and remove eight locknuts (4), screws (3), and propeller shaft (2) from transfer input flange (5). Discard locknuts (4).
3. Rotate propeller shaft (2) as necessary, and remove eight locknuts (7), screws (1), and propeller shaft (2) from transmission output flange (6). Discard locknuts (7).

b. Transmission-to-Transfer Propeller Shaft Installation

Aline propeller shaft (2) on transmission output flange (6) and transfer input flange (5) and install with sixteen screws (1) and (3) and new locknuts (4) and (7). Tighten locknuts (4) and (7) 32-40 lb-ft (43-54 N•m).

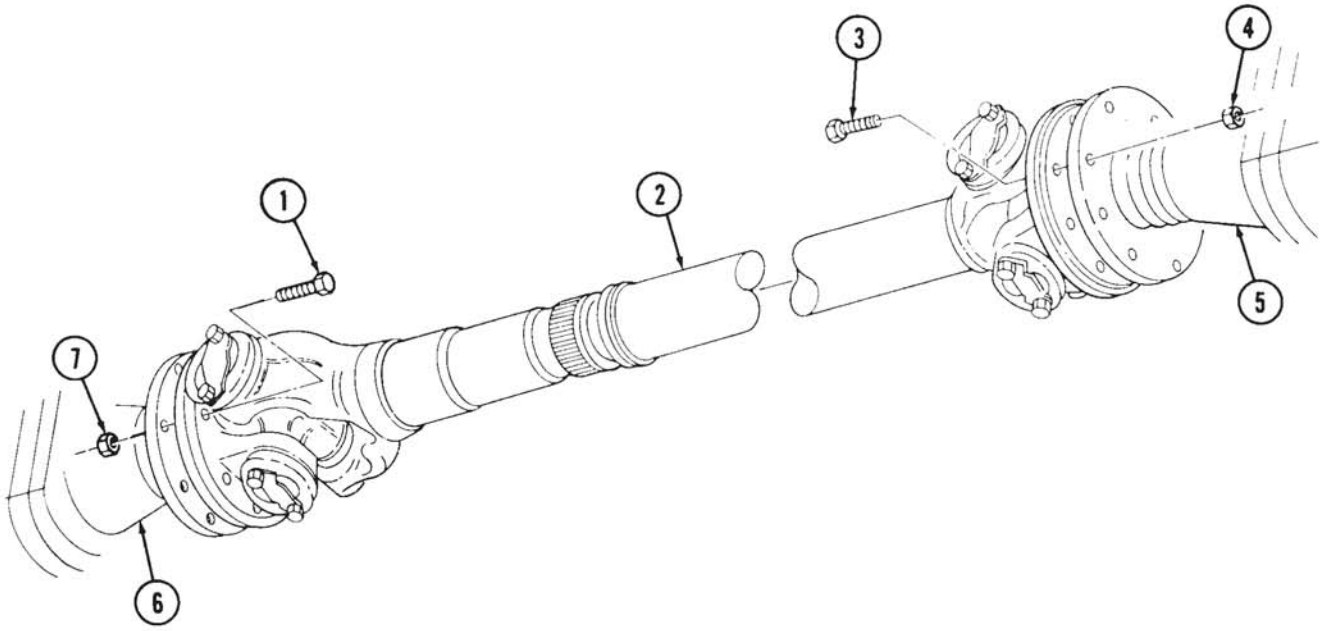

7-2. PROPELLER SHAFTS REPLACEMENT (Contd)

c. Transfer-to-Forward-Rear Propeller Shaft Removal

1. Chock wheels, release parking brake, and place the transmission in neutral (TM 9-2320-260-10).
2. Rotate propeller shaft (10) as necessary, and remove eight locknuts (9) and screws (16) from parking brake drum (8). Discard locknuts (9).
3. Remove eight locknuts (12), screws (11), and propeller output flange (14) from axle input flange (13). Discard locknuts (12).
4. Remove propeller input flange (15) from parking brake drum (8).

d. Transfer-to-Forward-Rear Propeller Shaft Installation

1. Position propeller input flange (15) on parking brake drum (8).
2. Install propeller output flange (14) on axle input flange (13) with eight screws (11) and new locknuts (12). Tighten locknuts (12) 32-40 lb-ft (43-54 N•m).
3. Install propeller input flange (15) on parking brake drum (8) with eight screws (16) and new locknuts (9). Tighten locknuts (9) 32-40 lb-ft (43-54 N•m).

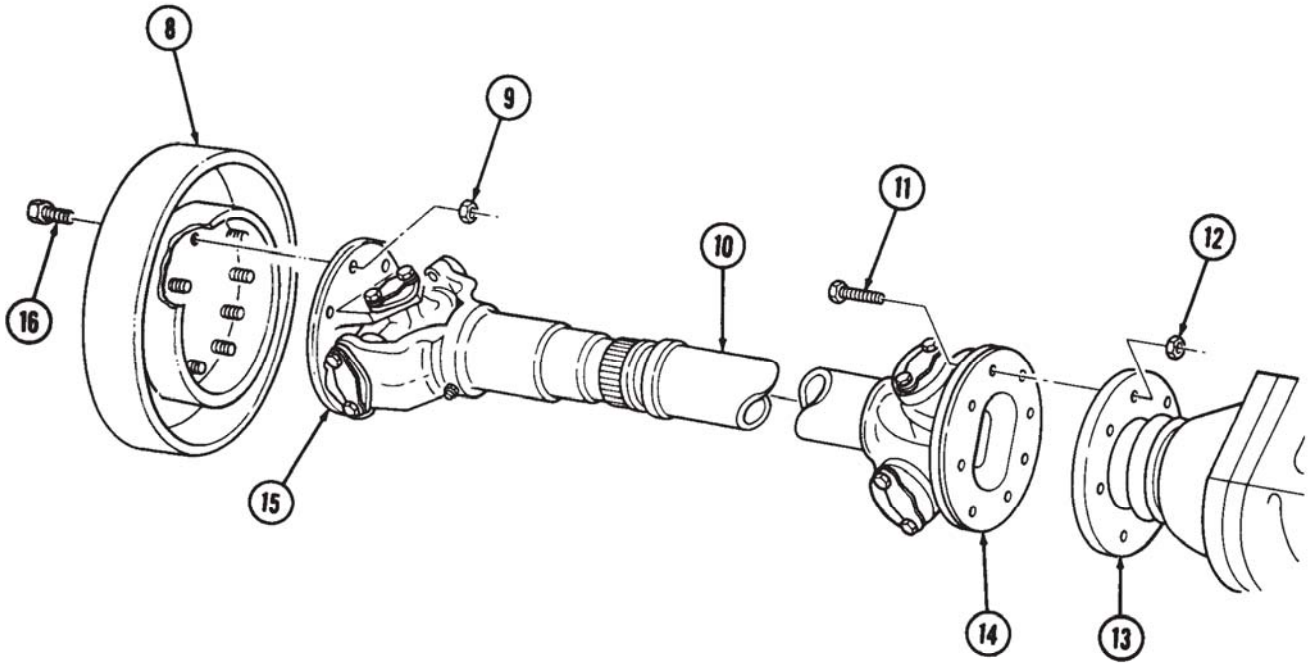

FOLLOW-ON TASK: Lubricate propeller shaft (LO 9-2320-260-12).

7-3. PROPELLER SHAFT REPLACEMENT (TRANSFER-TO-CENTER BEARING)

THIS TASK COVERS:

a. Removal **b. Installation**

INITIAL SETUP

APPLICABLE MODELS
M812A1 W/W, M814 W/W, M814 WO/W, M819 W/W, M820 WO/W, M820A1 WO/W, M820A2 WO/W, M821 W/W

MATERIAIS/PARTS
Eight locknuts

REFERENCES (TM)
TM 9-2320-260-10
TM 9-2320-260-20P

EQUIPMENT CONDITION
- Parking brake set (TM 9-2320-260-10).
- Center bearing removed (para. 7-6).

a. Removal

Remove eight locknuts (3), screws (1), and propeller input flange (4) from parking brake drum (2). Discard locknuts (3).

Install propeller input flange (4) on parking brake drum (2) with eight screws (1) and new locknuts (3). Tighten locknuts (3) 32-40 lb-ft (43-54 N•m).

7-3. PROPELLER SHAFT REPLACEMENT (TRANSFER-TO-CENTER BEARING) (Contd)

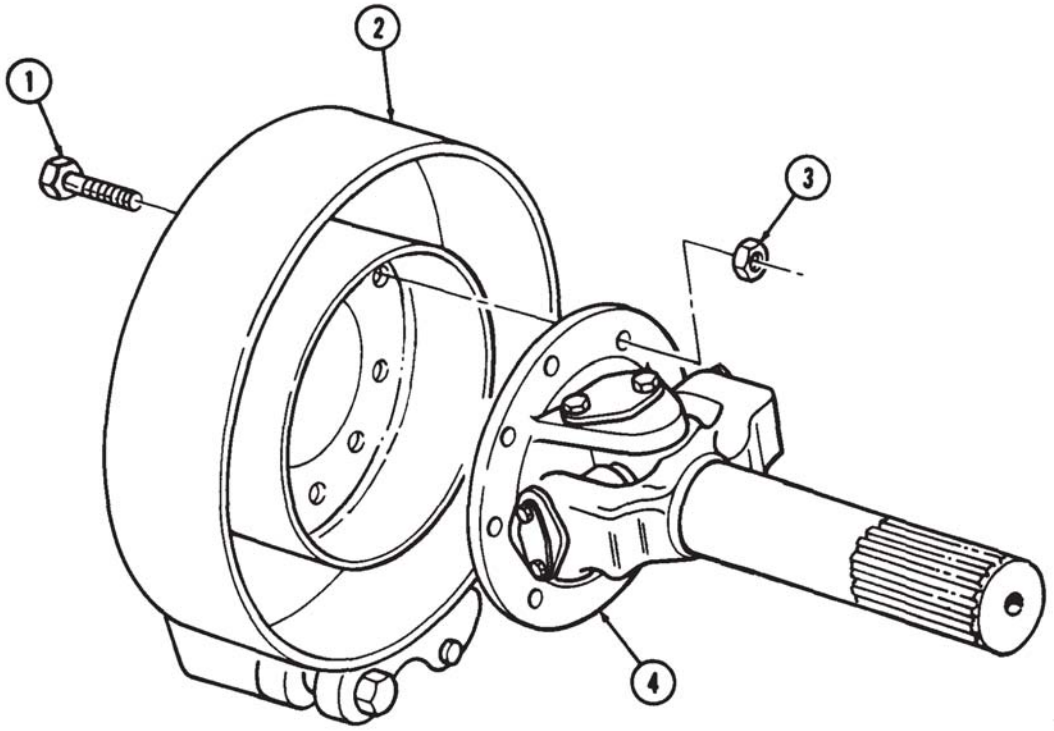

FOLLOW-ON TASK Install center bearing (para. 7-6).

7-4. PROPELLER SHAFT REPAIR

THIS TASK COVERS:

a Disassembly
b. Cleaning and Inspection
c. Assembly

INITIAL SETUP

APPLICABLE MODELS
All

MATERIALS/PARTS
Dust seal
Drycleaning solvent (Appendix C, Item 29)
GAA grease (Appendix C, Item 16)
Rags (Appendix C, Item 22)

REFERENCES (TM)
LO 9-2320-260-12
TM 9-2320-260-10
TM 9-2320-260-20P

EQUIPMENT CONDITION
- Parking brake set (TM 9-2320-260-10).
- Propeller shaft removed (para. 7-2 or 7-3).

GENERAL SAFETY INSTRUCTIONS
Keep fire extinguisher nearby when using drycleaning solvent.

NOTE

All propeller shafts are basically repaired the same.

a. Disassembly

1. Loosen and slide back dust cap (2) on splined rod (1).
2. Remove splined rod (1) from splined tube (6).
3. Remove dust cap (2) from splined rod (1).
4. Remove washer (3), dust seal (4), and washer (5) from splined tube (6). Discard dust seal (4).
5. Remove lubrication fitting (8) from each yoke (7).

b. Cleaning and Inspection

1. Inspect universal joint (9) for roughness, binding, looseness, and freeplay. Replace if damaged (para. 7-5).

WARNING

Drycleaning solvent is flammable and will not be used near open flame. Use only in well-ventilated places. Failure to do so may result in injury to personnel.

2. Clean the splines of splined rod (1), splined tube (6), and two lubrication fittings (8) with drycleaning solvent. Dry parts with a clean rag.
3. Inspect splined rod (1) and splined tube (6) for breaks, cracks, bends, broken welds, and stripped or crossed threads. Replace propeller shaft if damaged.

7-4. PROPELLER SHAFT REPAIR (Contd)

c. Assembly

1. Install lubrication fitting (8) on each yoke (7).
2. Install washer (5), new dust seal (4), and washer (3) on splined tube (6).
3. Position dust cap (2) on splined rod (1).
4. Apply GAA grease to the splines of splined rod (1) and install splined rod (1) into splined tube (6).
5. Secure dust cap (2) on splined tube (6).

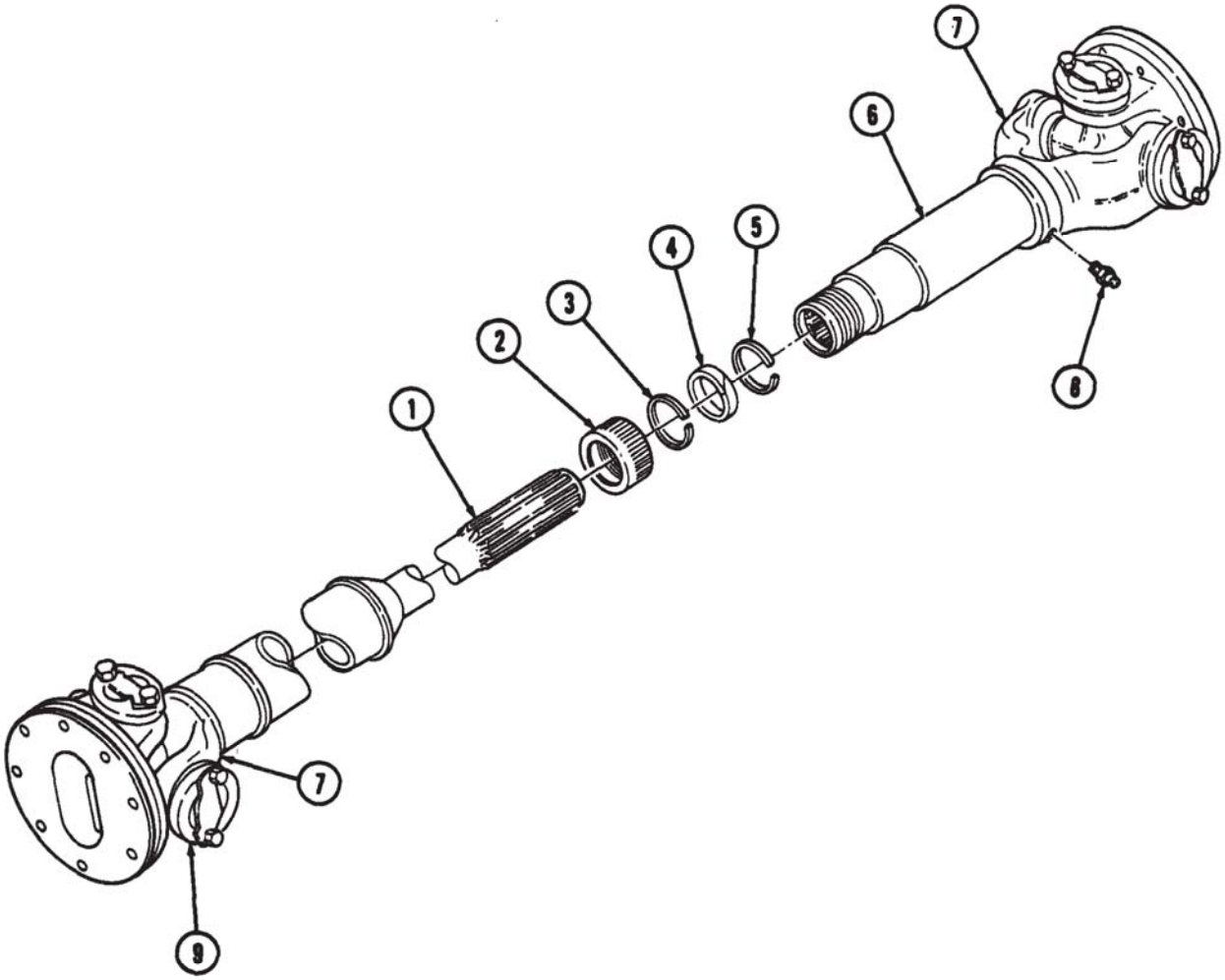

FOLLOW-ON TASKS: • Install propeller shaft (para. 7-2 or 7-3).
• Lubricate propeller shaft (LO 9-2320-260-12).

7-5.. UNIVERSAL JOINT MAINTENANCE

THIS TASK COVERS:

a. Disassembly
b. Cleaning and Inspection
c. Assembly

INITIAL SETUP

APPLICABLE MODELS
All

MATERIALS/PARTS
Drycleaning solvent (Appendix C, Item 29)
Rags (Appendix C, Item 22)

REFERENCES (TM)
LO 9-2320-260-12
TM 9-214
TM 9-2320-260-10
TM 9-2320-260-20P

EQUIPMENT CONDITION
- Parking brake set (TM 9-2320-260-10).
- Propeller shaft removed (para. 7-2 or 7-3).

GENERAL SAFETY INSTRUCTIONS
Keep fire extinguisher nearby when using drycleaning solvent.

a. Disassembly

NOTE

- Ensure the proper kit is available when repairing a Dana or Mechanic's brand universal joint (refer to TM 9-2320-260-20P).
- Three different types of universal joints may be used in the M809 series vehicles.

1. Snapring type:
   a. Remove four snaprings (4) from two yokes (1).
   b. Remove four bearing caps (5) and cross (2) from two yokes (1).
   c. Remove lubrication fittings (3), (6), and (7) from cross (2), and two yokes (1).
2. Cap type:
   a. Bend tabs of four plates (9) away from eight screws (8).
   b. Remove eight screws (8) and four plates (9) from yoke (14) and flange (13).
   c. Remove four bearing caps (10) and cross (11) from yoke (14) and flange (13).
   d. Remove lubrication fittings (12) and (15) from cross (11) and yoke (14).
3. Capless type:
   a. Remove four screws (19), lockwashers (20), and flange (21) from cross (18). Discard lockwashers (20).
   b. Bend tabs of two plates (17) away from four screws (16).
   c. Remove four screws (16), two plates (17), and cross (18) from shaft (23).
   d. Remove lubrication fittings (22) and (24) from cross (18) and shaft (23).

7-5. UNIVERSAL JOINT MAINTENANCE (Contd)

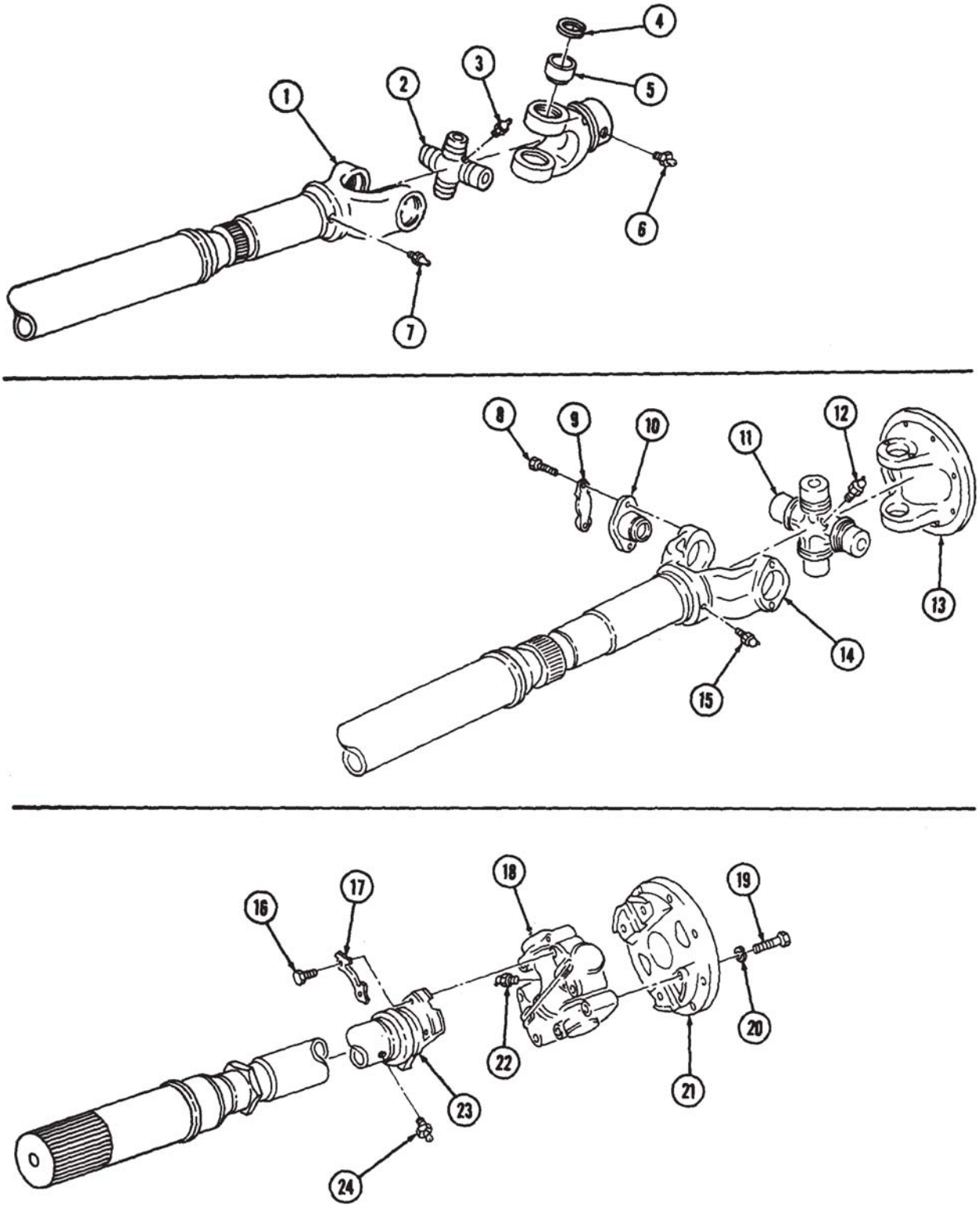

7-5. UNIVERSAL JOINT MAINTENANCE (Contd)

b. Cleaning and Inspection

WARNING

Drycleaning solvent is flammable and will not be used near open flame. Use only in well-ventilated places. Failure to do so may result in injury to personnel.

1. Clean all parts with drycleaning solvent and dry with a clean rag. Allow bearing caps to air dry.
2. Inspect bearing caps (TM 9-214) and cross. Replace universal joint if damaged.

c. Assembly

NOTE

Lubrication fittings on universal joint cross units must be alined before assembly.

1. Snapring type:
   a. Install lubrication fittings (3), (6), and (7) on cross (2) and two yokes (1).
   b. Install cross (2) and four bearing caps (5) on two yokes (1).
   c. Install four snaprings (4) on two yokes (1).
2. Cap type:
   a. Install lubrication fittings (12) and (15) on cross (11) and yoke (14).
   b. Install four bearing caps (10) and cross (11) on yoke (14) and flange (13).
   c. Install four plates (9) on yoke (14) and flange (13) with eight screws (8).
   d. Bend tabs of four plates (9) over eight screws (8).
3. Capless type:
   a. Install lubrication fittings (22) and (24) on cross (18) and shaft (23).
   b. Install cross (18) and two plates (17) on shaft (23) with four screws (16).
   c. Bend tabs of two plates (17) over four screws (16).
   d. Install flange (21) on cross (18) with four screws (19) and new lockwashers (20).

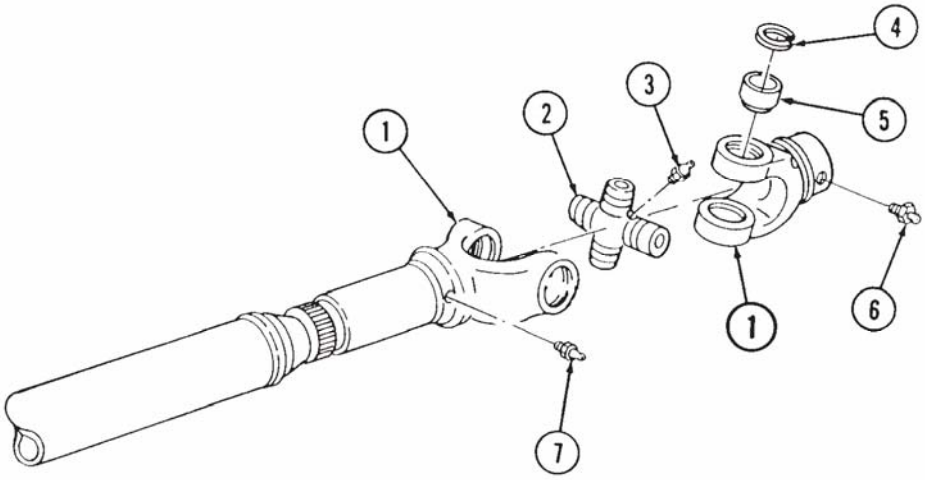

7-5. UNIVERSAL JOINT MAINTENANCE (Contd)

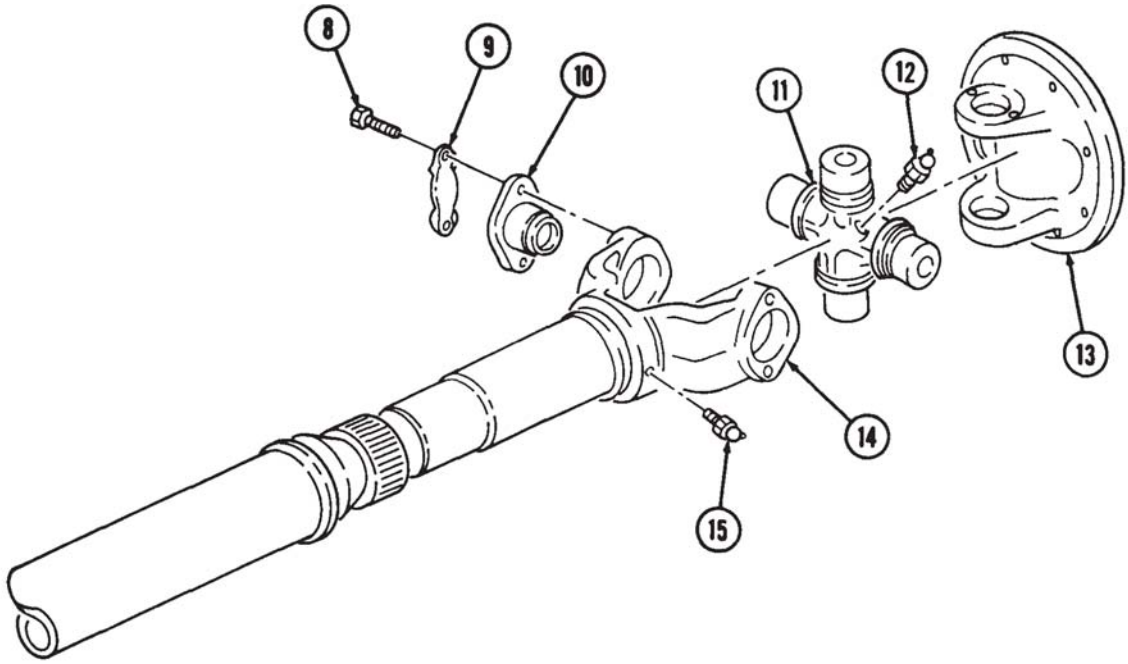

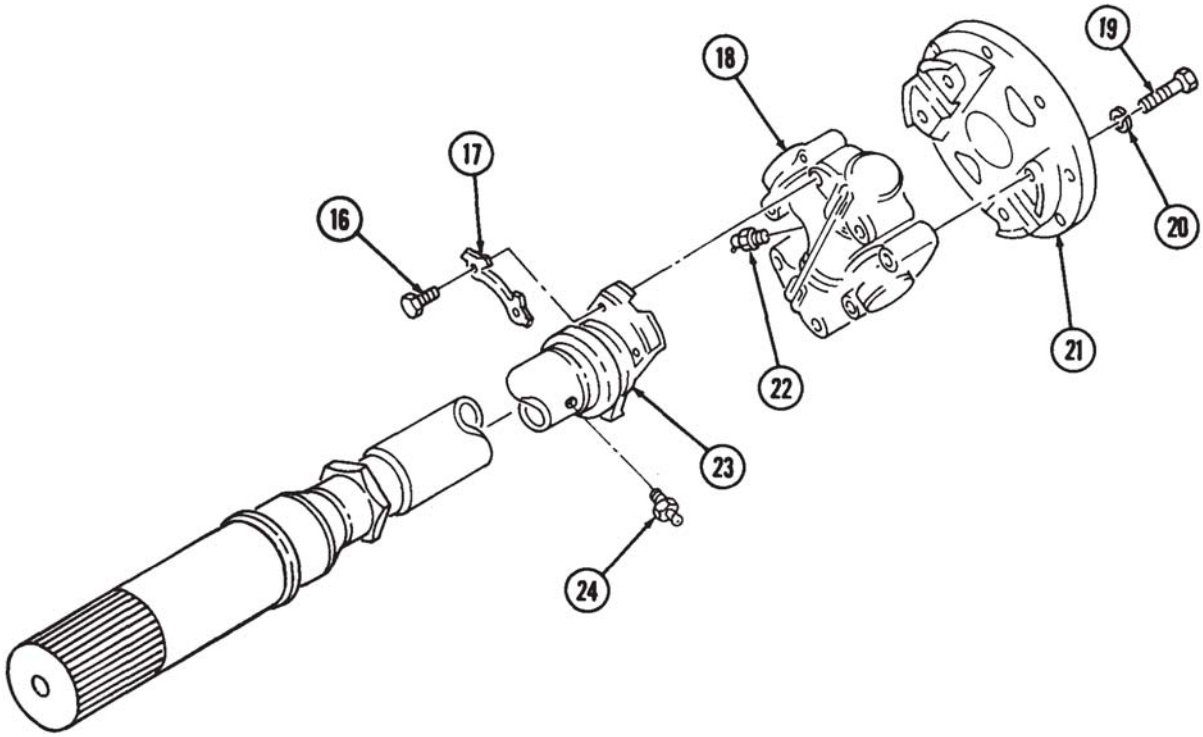

FOLLOW-ON TASKS: • Install propeller shaft (para. 7-2 or 7-3).
• Lubricate universal joint (LO 9-2320-260-12).

7-6. CENTER BEARING REPLACEMENT

THIS TASK COVERS:

a. Removal **b. Installation**

INITIAL SETUP

APPLICABLE MODELS
M812A1 W/W, M814 W/W, M814 WO/W, M819 W/W, M820 WO/W, M820A1 WO/W, M820A2 WO/W, M821 W/W

MATERIALS/PARTS
Four locknuts
Cotter pin
GAA grease (Appendix C, Item 16)

PERSONNEL REQUIRED
Two

REFERENCES (TM)
LO 9-2320-260-12
TM 9-2320-260-10
TM 9-2320-260-20P

EQUIPMENT CONDITION
- Parking brake set (TM 9-2320-260-10).
- Center bearing-to-forward-rear axle propeller shaft removed (para. 7-2).

a. Removal

1. Remove cotter pin (7) from nut (6). Discard cotter pin (7).
2. Remove nut (6) and flange (5) from splined rod (1).
3. Remove four locknuts (2) and screws (3) from bracket (9) and crossmember (4). Discard locknuts (2).
4. Lower splined rod (1) and remove center bearing (8) from splined rod (1).

b. Installation

1. Apply GAA grease to the splines of splined rod (1), position center bearing (8) on splined rod (1) and install bracket (9) on crossmember (4) with four screws (3) and new locknuts (2). Tighten locknuts (2) 32-40 lb-ft (43-54 N•m).
2. Install flange (5) on shaft (1) with nut (6). Tighten nut (6) 100-125 lb-ft (136-169 N•m), then back off nut (6) enough to install new cotter pin (7) on splined rod (1).

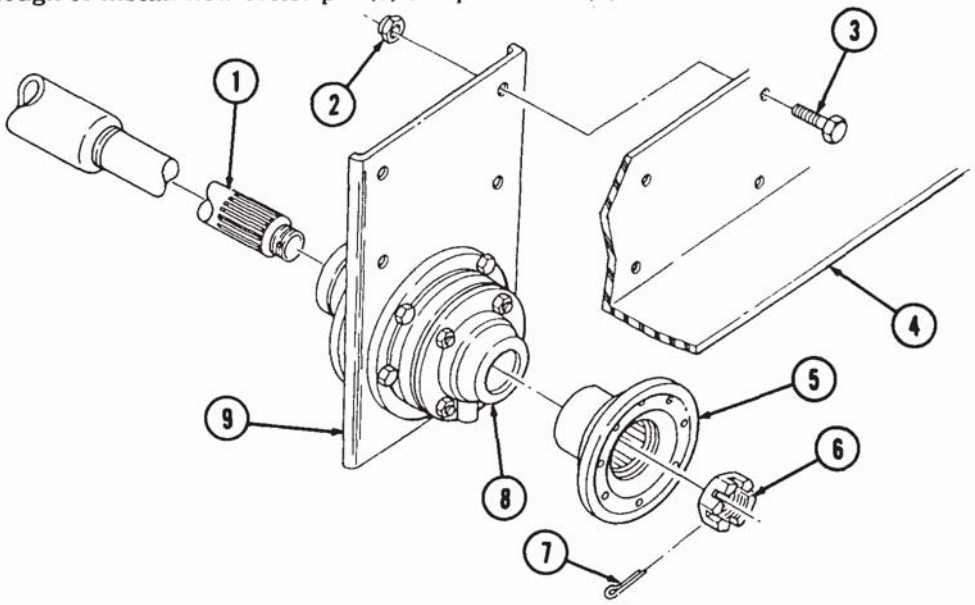

FOLLOW-ON TASKS:
- Install center bearing-to-forward-rear axle propeller shaft (para. 7-2).
- Lubricate center bearing (LO 9-2320-260-12).

Section II. FRONT AND REAR AXLE MAINTENANCE

7-7. FRONT AND REAR AXLE MAINTENANCE INDEX

PARA NO.	TITLE	PAGE NO.
7-8.	Steering Knuckle (CV) Boot Replacement	7-14
7-9.	Front Axle Shaft Flange Maintenance	7-16
7-10.	Front Axle Shaft and Universal Joint Maintenance	7-18
7-11.	Front Axle Oil Seal Replacement	7-22
7-12.	Rear Axle Shaft Maintenance	7-24
7-13.	Front and Rear Axle Breather Maintenance	7-26

7-8. STEERING KNUCKLE (CV) BOOT REPLACEMENT

THIS TASK COVERS:

a. Removal

b. Installation

INITIAL SETUP

APPLICABLE MODELS

All

MATERIALS/PARTS

Sixteen lockwashers
Steering knuckle boot kit (5704510)
Adhesive (Appendix C, Item 2)

REFERENCES (TM)

TM 9-2320-260-10
TM 9-2320-260-20P

EQUIPMENT CONDITION

- Parking brake set (TM 9-2320-260-10).
- Front wheel removed (para. 9-3).

a. Removal

1. Remove four screws (4), lockwashers (3), and brushguard (5) from steering knuckle housing (6). Discard lockwashers (3).
2. Cut and remove safety wire (7) from twelve screws (1). Discard safety wire (7).
3. Remove twelve screws (1), lockwashers (2), and retaining plate (8) from steering knuckle housing (6). Discard lockwashers (2).
4. Pull boot (12) from steering knuckle housing (6) by turning the boot (12) inside out.
5. Remove nut (9), screw (11), and clamp (10) from boot (12).
6. Cut and remove boot (12). Discard boot (12).

b. Installation

NOTE

Thoroughly clean axle housing before replacing boot.

1. Unzip, turn inside out, and place new boot (12) around axle housing (13). Ensure boot (12) is positioned so that zipper tab is at the top.
2. Seat ridge of boot (12) into the groove of axle housing (13). Completely close zipper.

NOTE

After performing step 3, allow adhesive to set for 3-5 minutes.

3. Apply a thorough coat of adhesive on both sides of zipper.

NOTE

Connect clamp 1-2 inches (26-50 mm) away from zipper.

4. Install new clamp (10) in the groove of boot (12) with new screw (11) and new nut (9).
5. Cut excess length of zipper from boot (12).
6. Fold free inner edge of boot (12) over itself and place the flange of boot (12) against steering knuckle housing (6).
7. Install retaining plate (8) on steering knuckle housing (6) with twelve screws (1) and new lockwashers (2).
8. Install new safety wire (7) through eyes of screws (1) by twisting and bending the ends.
9. Install brushguard (5) on steering knuckle housing (6) with four screws (4) and new lockwashers (3). Tighten screws (4) 130-170 lb-ft (176-231 N•m).

7-8. STEERING KNUCKLE (CV) BOOT REPLACEMENT (Contd)

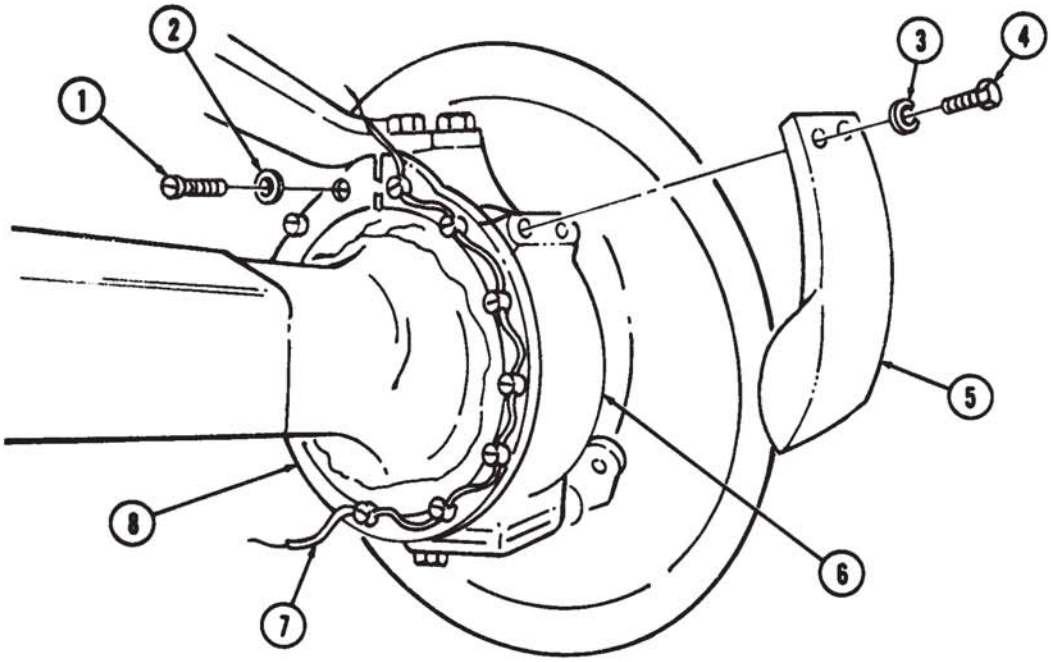

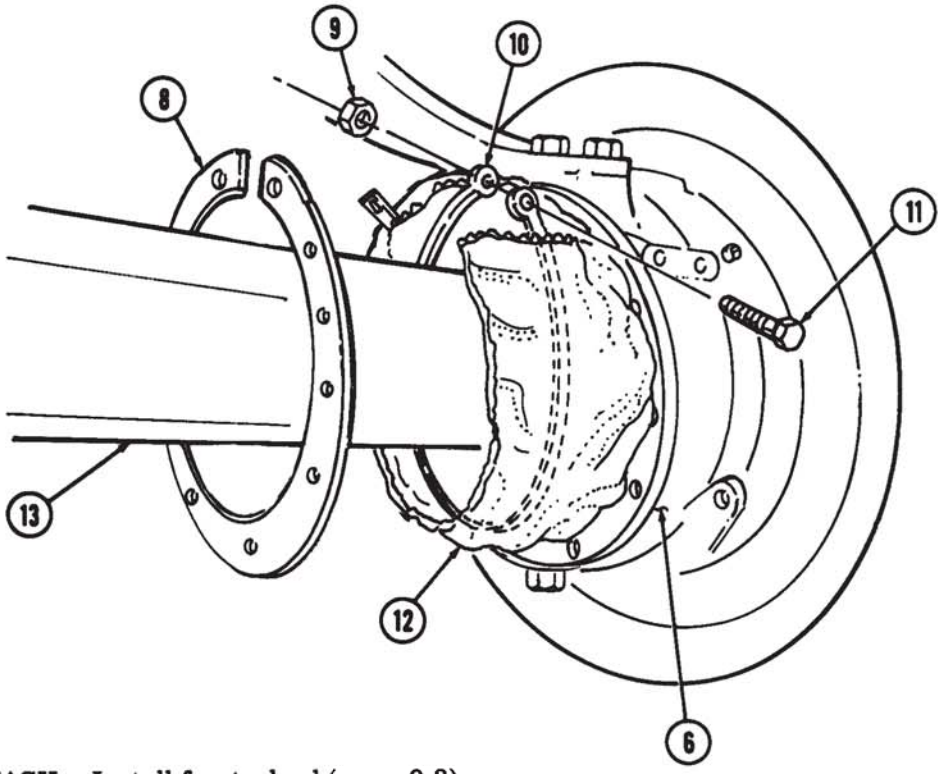

FOLLOW-ON TASK: Install front wheel (para. 9-3).

7-9. FRONT AXLE SHAFT FLANGE MAINTENANCE

THIS TASK COVERS:

a. Removal
b. Cleaning and Inspection
c. Installation

INITIAL SETUP

APPLICABLE MODELS
All

MATERIALS/PARTS
Ten lockwashers
Gasket
Drycleaning solvent (Appendix C, Item 29)
Rags (Appendix C, Item 22)
Sealing compound (Appendix C, Item 26)
Sealing compound (Appendix C, Item 27)

REFERENCES (TM)
LO 9-2320-260-12
TM 9-2320-260-10
TM 9-2320-260-20P

EQUIPMENT CONDITION
Parking brake set (TM 9-2320-260-10).

GENERAL SAFETY INSTRUCTIONS
Keep fire extinguisher nearby when using drycleaning solvent.

a. Removal

Remove ten screws (5), lockwashers (4), flange (3), and gasket (2) from hub (1). Discard lockwashers (4) and gasket (2).

b. Cleaning and Inspection

WARNING

Drycleaning solvent is flammable and will not be used near open flame. Use only in well-ventilated places. Failure to do so may result in injury to personnel.

1. Clean flange (3) and exposed surface of hub (1) with drycleaning solvent; then dry with a clean rag.
2. Inspect flange (3) for cracks, breaks, nicks, burrs, or chipped splines. Replace flange (3) if cracked, broken, nicked, burred, or splines are chipped.
3. Inspect the splines of front axle shaft (6) for nicks, burrs, or chips. Remove minor nicks or burrs with a file or emery cloth. Conduct front axle shaft maintenance if damaged (para. 7-10).

c. Installation

1. Apply sealing compound on one side of new gasket (2) and install gasket (2) on hub (1).
2. Apply sealing compound to the threads of ten screws (5) and install flange (3) on hub (1) with ten new lockwashers (4) and screws (5).

7-9. FRONT AXLE SHAFT FLANGE MAINTENANCE (Contd)

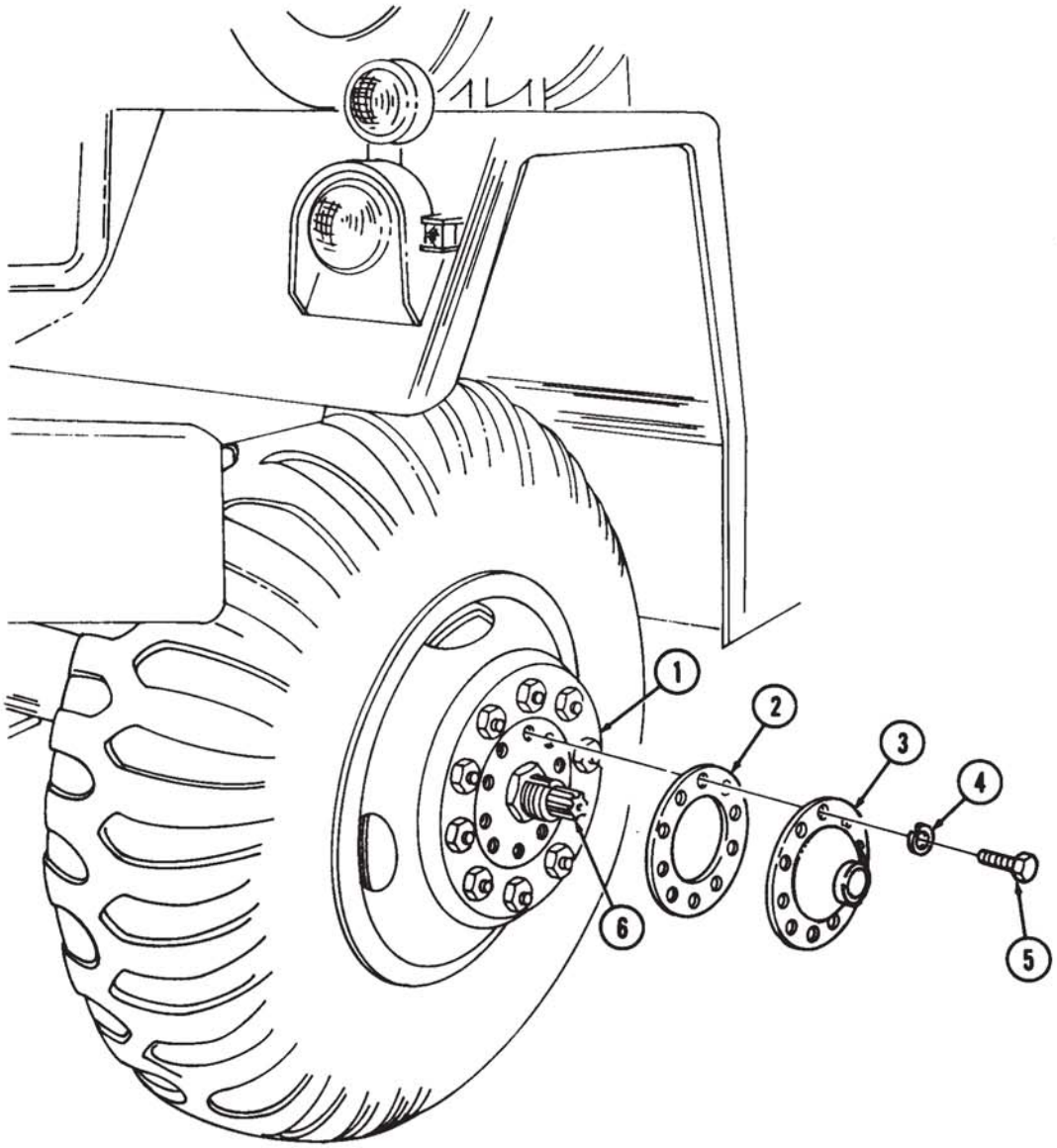

7-10. FRONT AXLE SHAFT AND UNIVERSAL JOINT MAINTENANCE

THIS TASK COVERS:

a. Removal
b. Cleaning and Inspection
c. Installation

INITIAL SETUP

APPLICA8LE MODELS
All

MATERIAIS/PARTS
Two brake line seals
Ten lockwashers
Seal
GAA grease (Appendix C, Item 16)
Sealant (Appendix C, Item 27)
Drycleaning solvent (Appendix C, Item 29)
Rags (Appendix C, Item 22)
Cap and plug set (Appendix C, Item 9)

REFERENCES (TM]
LO 9-2320-260-12
TM 9-2320-260-10
TM 9-2320-260-20P

EQUIPMENT CONDITION
- Parking brake set (TM 9-2320-260-10).
- Front axle raised and supported (para. 9-2).
- Front hub and drum removed (para. 9-4).

GENERAL SAFETY INSTRUCTIONS
- Do not use compressed air or dry brush for cleaning in areas where asbestos brake lining dust may accumulate.
- Use brake spring pliers to remove or replace brakeshoe springs.
- Keep fire extinguisher nearby when using drycleaning solvent.

a. Removal

CAUTION

Cap or plug openings immediately after disconnecting lines and hoses to prevent contamination. Failure to do so may result in brake system damage.

NOTE

Have a drainage container positioned to catch brake fluid.

1. Remove screw (8), brake line seals (5) and (7), and brake line (6) from wheel cylinder (2). Discard brake line seals (5) and (7).

WARNING

Brakeshoe springs are under tension. Use brake spring pliers to remove brakeshoe springs. Other tools may fail to hold spring, which may cause injury to personnel.

2. Remove spring (1) from brakeshoes (11).
3. Remove ten nuts (13), lockwashers (14), and reinforcement plate (12) from backing plate (10). Discard lockwashers (14).
4. Remove backing plate (10) from spindle (3).
5. Remove spindle (3) from steering knuckle (9) and splined rod (4).

CAUTION

Care must be used when removing axles to prevent damage to or displacement of oil seal retaining assembly,

6. Remove axle (21) from steering knuckle (9).
7. Remove bearing (15) and washer (16) from splined rod (4).
8. Remove retainer (20), washer (18), and seal (19) from splined rod (17). Discard seal (19).

7-10. FRONT AXLE SHAFT AND UNIVERSAL JOINT MAINTENANCE (Contd)

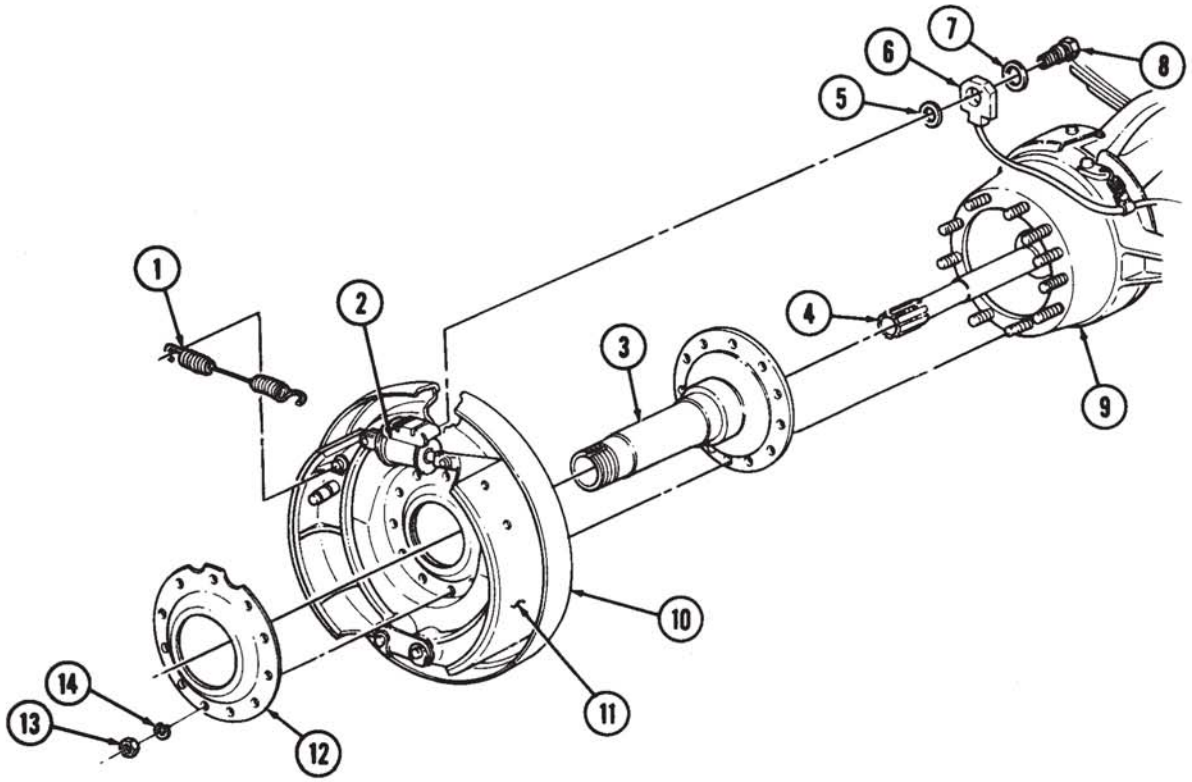

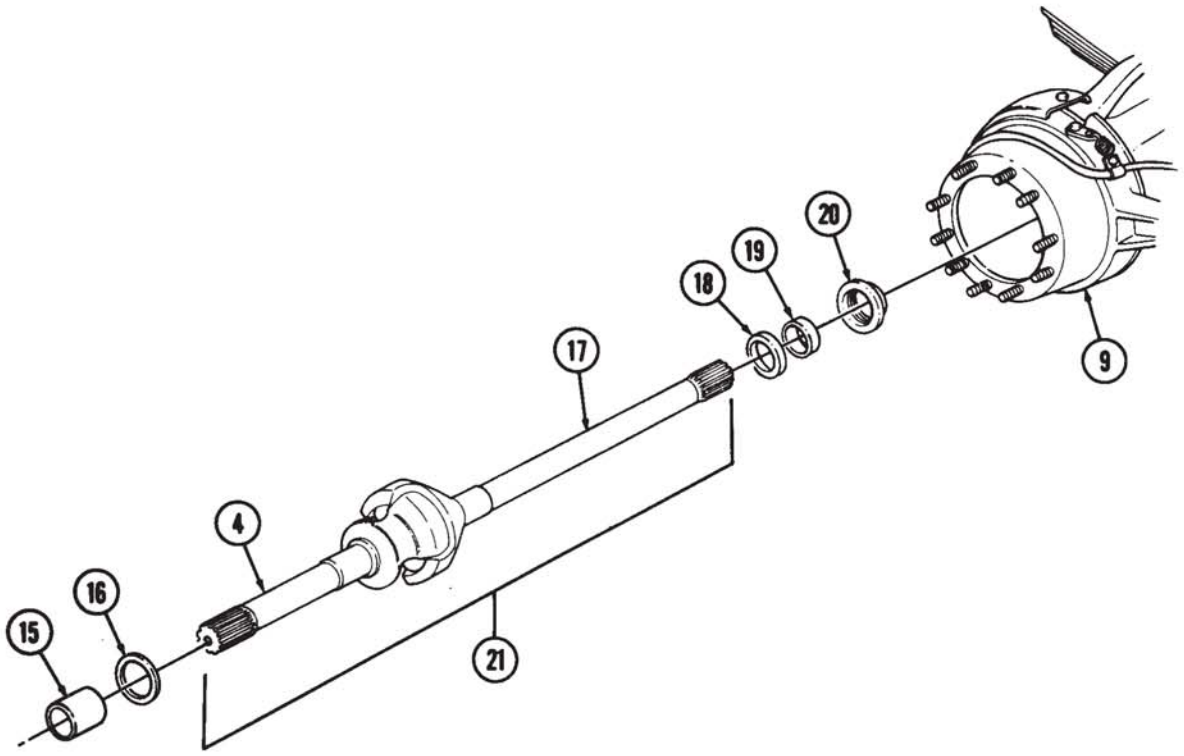

7-10. FRONT AXLE SHAFT AND UNIVERSAL JOINT MAINTENANCE (Contd)

b. Cleaning and Inspection

WARNING

Do not use compressed air or dry brush for cleaning when working where asbestos brake lining dust may accumulate. Remove asbestos dust and other residue from these areas using a soft bristle brush or cloth soaked with water. Breathing asbestos dust may cause injury to personnel.

1. Inspect for worn universal joint (4).
   - **a.** Twist splined rods (3) and (5) back and forth to check for free play.
   - **b.** Push and pull splined rods (3) and (5) and check for free play.
   - **c.** Check the universal joint (4) for roughness, binding, and free play. Replace universal joint (4) if damaged.

WARNING

Drycleaning solvent is flammable and will not be used near open flame. Use only in well-ventilated places. Failure to do so may result in injury to personnel.

CAUTION

Do not clean brake lining or any part of wheel cylinder with drycleaning solvent. Damage to equipment may result.

2. Clean all metal parts with drycleaning solvent, then dry with a clean rag. Do not clean brake lining or any part of the wheel cylinder with drycleaning solvent. Clean old sealer remains from mating surfaces.
3. Inspect splined rods (3) and (5) for breaks, cracks, bends, nicks, burrs, and chips. Replace axle (11) if damaged.
4. Inspect washer (2) for discoloration or other evidence of overheating and scoring. Replace washer (2) if discolored or scored.
5. Inspect spindle (14) for scoring. Replace spindle (14) if scored.
6. Inspect studs (10) for stripped or crossed threads. Replace studs (10) if damaged.

c. Installation

1. Lubricate universal joint (4) (LO 9-2320-260-12).
2. Install retainer (8), new seal (7), and washer (6) on splined rod (5).

CAUTION

Care must be used when installing axle shafts to prevent darnage to or displacement of oil seal retainer assembly.

3. Apply GAA grease to the splines of splined rod (5), then position axle (11) into steering knuckle (9), and install splined rod (5) within the differential.
4. Install washer (2) and bearing (1) on splined rod (3).
5. Apply sealant to reinforcement plate (21) and install reinforcement plate (21) on brake drum (20).
6. Aline spindle (14) on splined rod (3) and steering knuckle (9).
7. Install backing plate (19) on spindle (14) and steering knuckle (9) with ten new lockwashers (23) and nuts (22). Tighten nuts (22) 90-115 lb-ft (122-156 N•m). For the extended axles of M820 trucks, tighten nuts (22) 130-167 lb-ft (176-226 N•m).

WARNING

Brakeshoe springs are under tension. Use brake spring pliers to replace brakeshoe springs. Other tools may fail to hold spring, which may cause injury to personnel.

8. Install spring (12) on brakeshoes (20).
9. Install brake line (16) on wheel cylinder (13) with new brake line seals (15) and (17) and screw (18).

7-10. FRONT AXLE SHAFT AND UNIVERSAL JOINT MAINTENANCE (Contd)

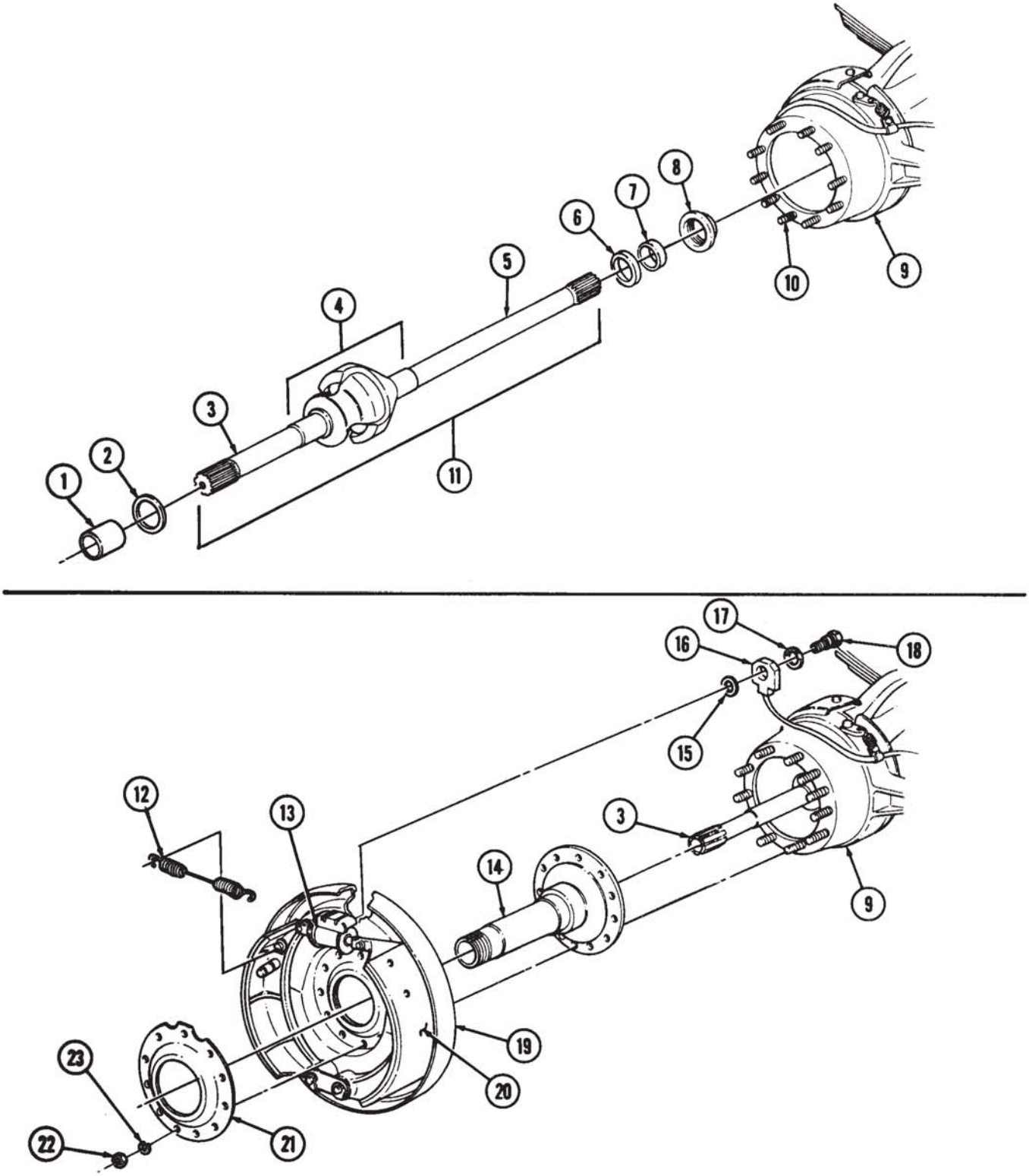

FOLLOW-ON TASKS:
- Lubricate front axle (LO 9-2320-260-12).
- Install hub and drum (para. 9-4).
- Lower front axle (para. 9-2).

7-11. FRONT AXLE OIL SEAL REPLACEMENT

THIS TASK COVERS:

a. Removal **b. Installation**

INITIAL SETUP

APPLICABLE MODELS
All

MATERIALS/PARTS
Seal

REFERENCES (TM)
TM 9-2320-260-10
TM 9-2320-260-20P

EQUIPMENT CONDITION
- Parking brake set (TM 9-2320-260-10).
- Front axle removed (para. 7-10).

a. Removal

CAUTION

Care must be used when removing axles to prevent damage or displacement of oil seal retaining assembly.

Remove retainer (3), seal (2), and washer (1) from splined rod (4).

b. Installation

CAUTION

Care must be used when installing axles to prevent damage or displacement of oil seal retaining assembly.

Install washer (1), seal (2), and retainer (3) on splined rod (4).

7-11. FRONT AXLE OIL SEAL REPLACEMENT (Contd)

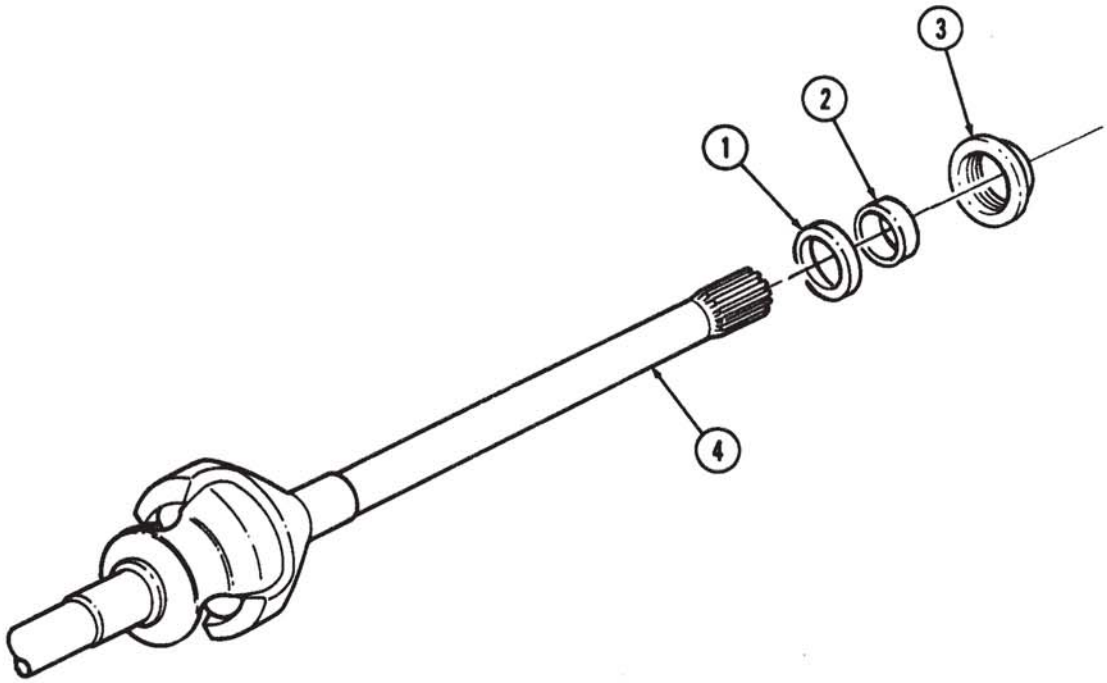

FOLLOW-ON TASK: Install front axle (para. 7-10).

7-12. REAR AXLE SHAFT MAINTENANCE

THIS TASK COVERS:

a. Removal
b. Cleaning and Inspection
c. Installation

INITIAL SETUP

APPLICABLE MODELS
All

MATERIALS/PARTS
Gasket
Ten lockwashers
Drycleaning solvent (Appendix C, Item 29)
Rags (Appendix C, Item 22)

REFERENCES (TM)
TM 9-2320-260-10
TM 9-2320-260-20P

EQUIPMENT CONDITION
Parking brake set (TM 9-2320-260-10).

GENERAL SAFETY INSTRUCTIONS
Keep fire extinguisher nearby when using drycleaning solvent.

a. Removal

Remove ten screws (5), lockwashers (4), axle shaft (3), and gasket (1) from axle housing (2). Discard gasket (1) and lockwashera (4).

b. Cleaning and Inspection

WARNING

Drycleaning solvent is flammable. and will not be used near open flame. Use only in well-ventilated places. Failure to do so may result in inquiry to personnel.

1. Clean all parts with drycleaning solvent, then dry each part with a clean rag.
2. Inspect axle shaft (3) for cracks, breaka, and bends. Replace axle shaft (3) if cracked, broken, or bent.
3. Inspect the splines of axle shaft (3) for nicks, burrs, cracks, and breaks. Remove minor nicks and burra with a file or emery cloth. Replace axle shaft (3) if the splines are cracked or broken.

c. Installation

Position new gasket (1) on axle shaft (3) and install axle shaft (3) on axle housing (2) with ten new lockwashers (4) and screws (5).

7-12. REAR AXLE SHAFT MAINTENANCE (Contd)

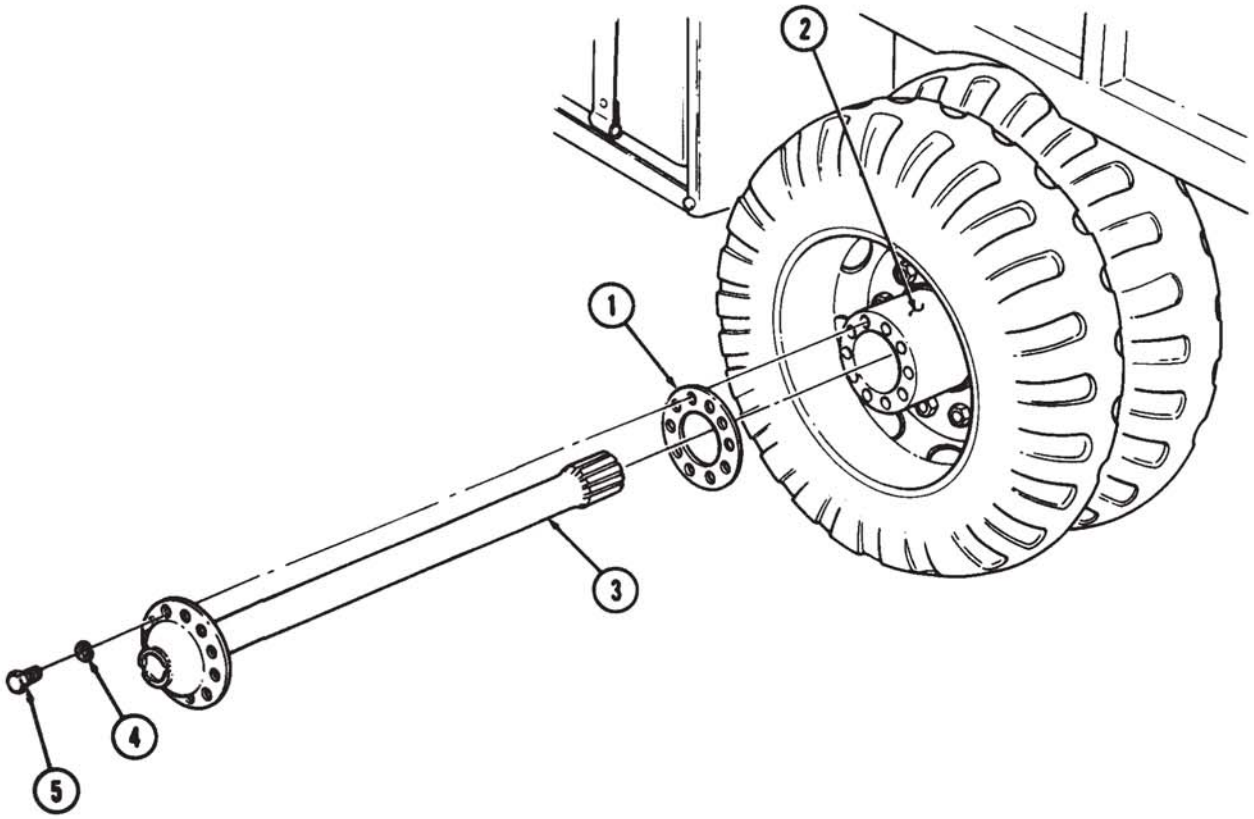

7-13. FRONT AND REAR AXLE BREATHER MAINTENANCE

THIS TASK COVERS:

a. Removal
b. Cleaning and Inspection
c. Installation

INITIAL SETUP

APPLICABLE MODELS
All

MATERIAL/PARTS
Drycleaning solvent (Appendix C, Item 29)
Rags (Appendix C, Item 22)

REFERENCES (TM)
TM 9-2320-260-10
TM 9-2320-260-20P

EQUIPMENT CONDITION
Parking brake set (TM 9-2320-260-10).

GENERAL SAFETY INSTRUCTIONS
Keep fire extinguisher nearby when using drycleaning solvent.

a. Removal

Remove breather (1) from axle housing (2).

b. Cleaning and Inspection

WARNING

Drycleaning solvent is flammable and will not be used near open flame. Use only in well-ventilated places. Failure to do so may result in injury to personnel.

1. Clean breather (1) with drycleaning solvent and dry with a clean rag.
2. Press breather (1) to confirm free movement of the breather crimp cap is under spring tension. Replace breather (1) if clogged, or no spring action is evident.

c. Installation

Install breather (1) in axle housing (2).

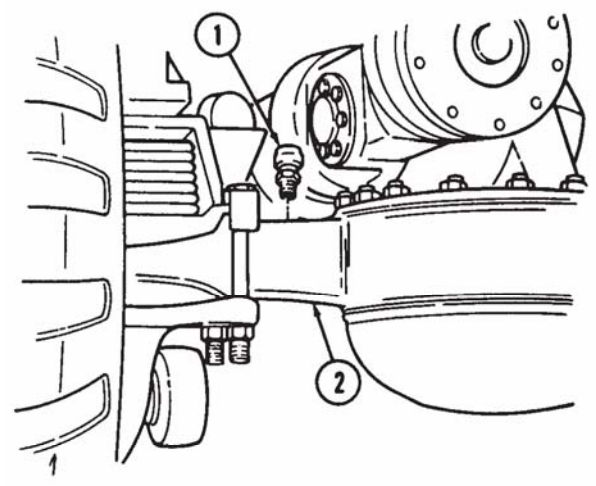

Section III. FRONT AND REAR SUSPENSION MAINTENANCE

7-14. FRONT AND REAR SUSPENSION MAINTENANCE INDEX

PARA. NO.	TITLE	PAGE NO.
7-15.	Front Spring Replacement	7-27
7-16.	Spring Maintenance	7-32
7-17.	Rear Spring Replacement	7-36
7-18.	Rear Spring Seat Maintenance	7-40
7-19.	Shock Absorber Replacement	7-44
7-20.	Cross Tube (Trunnion Axle) Replacement	7-46
7-21.	Torque Rods Replacement	7-48

7-15. FRONT SPRING REPLACEMENT

THIS TASK COVERS:

a. Removal **b. Installation**

INITIAL SETUP

APPLICABLE MODELS
All

MATERIALS/PARTS
Cotter pin
Felt pad
Dust shield
Four lockwashers
Seven locknuts

REFERENCES (TM)
LO 9-2320-260-12
TM 9-2320-260-10
TM 9-2320-260-20P

EQUIPMENT CONDITION
- Parking brake set (TM 9-2320-260-10).
- Front frame raised and supported (para. 9-2).
- Shock absorber removed (para. 7-19).
- Front axle raised (para. 9-2).

GENERAL SAFETY INSTRUCTIONS
- Personnel must stand clear of vehicle when raising the axle.
- All personnel must stand clear of spring ends when removing spring hanger pins.

7-15. FRONT SPRING REPLACEMENT (Contd)

a. Removal

1. Remove locknut (9) and screw (5) from leaf spring shackle (4). Discard locknut (9).

WARNING

When removing retaining pins, personnel must be cautious of spring ends. Tension may cause shifting within the leaf spring assembly, which may cause injury to personnel.

2. Support leaf spring (6) and remove retaining pin (7) and leaf spring (6) from leaf spring shackle (4).
3. Remove locknut (3) and screw (1) from bracket (2). Discard locknut (3).
4. Remove retaining pin (11) and leaf spring shackle (4) from bracket (2).
5. Remove lubrication fittings (8) and (10) from retaining pins (7) and (11).

NOTE

Perform steps 6 through 9 for right front spring only.

6. Remove cotter pin (20) and loosen adjusting plug (19) on power steering assist cylinder (21). Discard cotter pin (20).
7. Turn steering wheel 1/4-turn right and left to loosen ball seats in power steering assist cylinder (21).
8. Remove power steering assist cylinder (21) from mounting pin (16).
9. Remove felt pad (18) and dust shield (17) from mounting pin (16). Discard felt pad (18) and dust shield (17).
10. Remove locknut (12), screw (15), mounting pin (16), and leaf spring (6) from bracket (13). Discard locknut (12).
11. Remove lubrication fitting (14) from mounting pin (16).

WARNING

Raising the axle while the front frame is raised and supported may cause the load to shift. Never perform this procedure on both sides of vehicle at the same time. A shifting load may cause injury to personnel.

12. Raise axle housing (22) to remove tension on leaf spring (6).
13. Remove four nuts (25), lockwashers (26), leaf spring retaining plate (27), and lower leaf spring seat (28) from two U-bolts (24). Discard lockwashers (26).
14. Remove two U-bolts (24) and leaf spring saddle (23) from leaf spring (6).
15. Lower axle housing (22) to release tension on leaf spring (6).

NOTE

After the parking brake is set, the leaf spring bumper maybe removed without preparing the truck in any other way.

16. Remove two locknuts (31) and leaf spring bumper (33) from rail (32). Discard locknuts (31).
17. Remove two locknuts (34), screws (30), and reinforcement bracket (29) from rail (32). Discard locknuts (34).

7-15. FRONT SPRING REPLACEMENT (Contd)

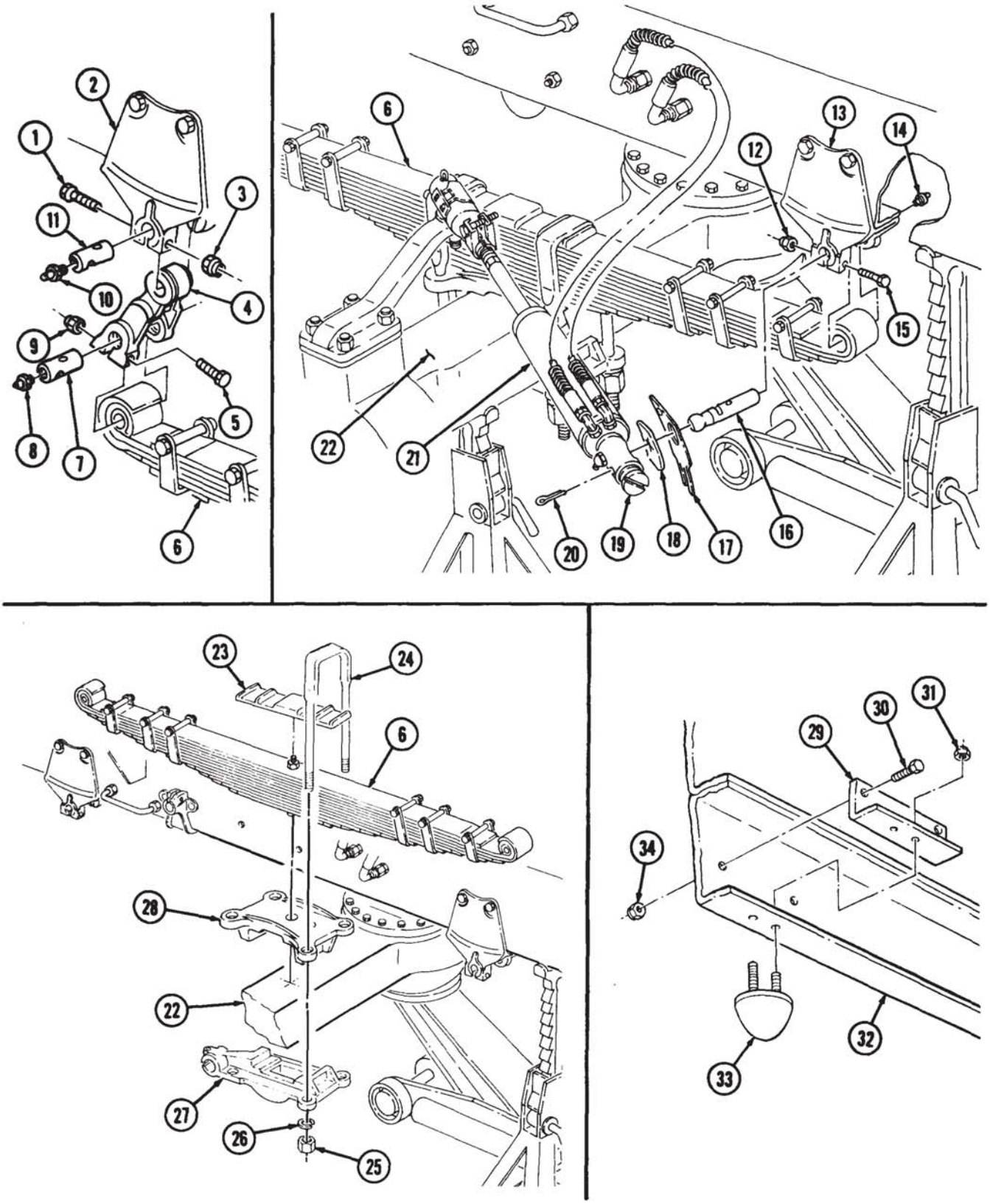

7-15.. FRONT SPRING REPLACEMENT (Contd)

b. Installation

1. Install reinforcement bracket (1) on rail (4) with two screws (2) and new locknuts (6).
2. Install leaf spring bumper (5) on rail (4) and reinforcement bracket (1) with two new locknuts (3).
3. Install lubrication fittings (31) and (33) on retaining pins (30) and (34).
4. Install leaf spring shackle (28) on bracket (26) with retaining pin (34), screw (25), and new locknut (27). Tighten locknut (27) 70-85 lb-ft (95-115 N•m).
5. Raise and install leaf spring (9) on leaf spring shackle (28) with retaining pin (30), screw (29), and new locknut (32). Tighten locknut (32) 70-85 lb-ft (95-115 N•m).
6. Install lubrication fitting (17) on mounting pin (19).
7. Raise and install leaf spring (9) on bracket (16) with mounting pin (19), screw (18), and new locknut (15). Tighten locknut (15) 70-85 lb-ft (95-115 N•m).
8. Install lower leaf spring seat (14), leaf spring retaining plate (12), leaf spring (9), and leaf spring saddle (7) on axle (13) with two U-bolts (8), four new lockwashers (11), and nuts (10). Tighten nuts (10) 350-400 lb-ft (475-542 N•m).
9. Lower axle housing (13).

NOTE

Perform steps 10 through 13 for right spring only.

10. Install new dust shield (20) and new felt pad (21) on mounting pin (19).
11. Install power steering assist cylinder (24) on mounting pin (19).
12. Tighten adjusting plug (22) and install new cotter pin (23) on adjusting plug (22).
13. Bend felt pad (21) and dust shield (20) around power steering assist cylinder (24).

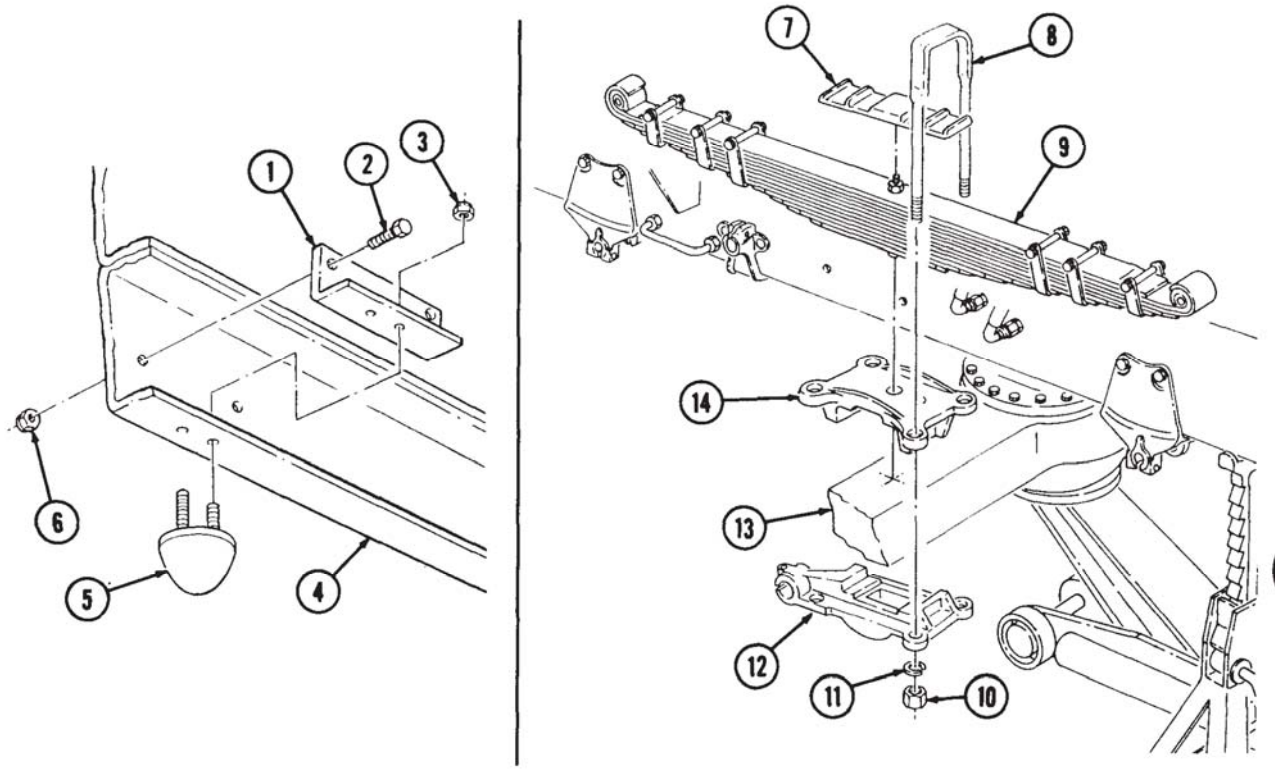

7-15. FRONT SPRING REPLACEMENT (Contd)

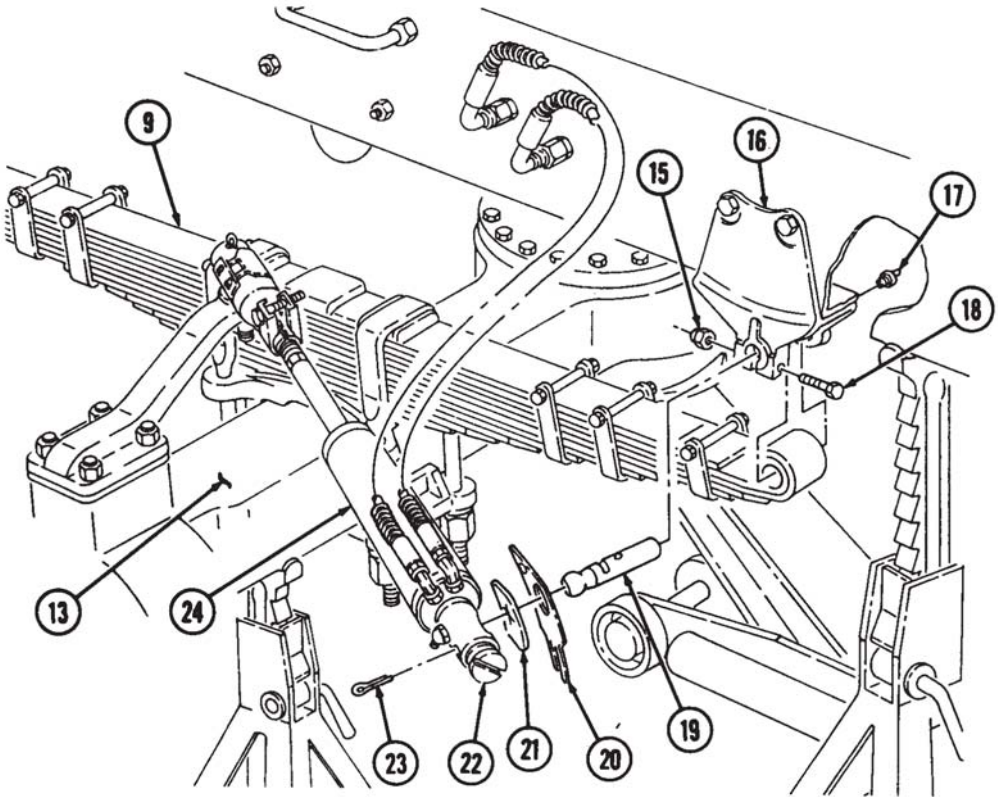

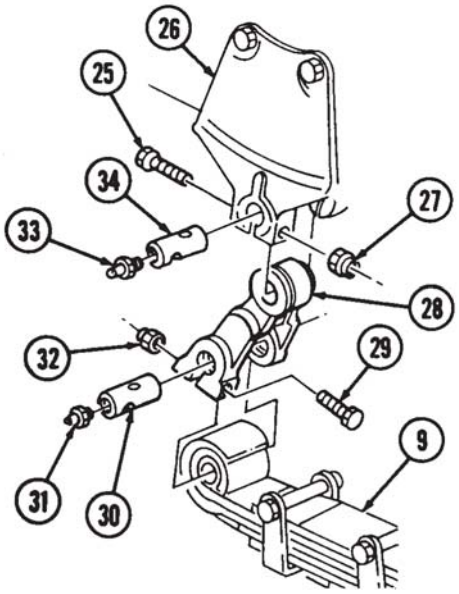

FOLLOW-ON TASKS:
- Install shock absorber (para. 7-19).
- Lower front axle (para. 9-2).
- Lower front frarne (9-2).
- Lubricate front leaf spring shackle and bushings (LO 9-2320-260-12).

7-16. SPRING MAINTENANCE

THIS TASK COVERS:

a. Disassembly
b. Cleaning and Inspection
c. Assembly

INITIAL SETUP

APPLICABLE MODELS
All

MATERIALS/PARTS
Drycleaning solvent (Appendix C, Item 29)
Rags (Appendix C, Item 22)

REFERENCES (TM)
TM 9-2320-260-10
TM 9-2320-260-20P

EQUIPMENT CONDITION
- Parking brake set (TM 9-2320-260-10).
- Front or rear spings removed (para. 7-15 or 7-17).

GENERAL SAFETY INSTRUCTIONS
- Spring plates are under tension. Release tension slowly.
- Eye protection is required when using wire brush for cleaning.
- Keep fire extinguisher nearby when using drycleaning solvent.

NOTE

Front and rear leaf springs are maintained basically the same. This procedure is for the front leaf springs.

a. Disassembly

1. Compress front spring (1) by placing a C-clamp on each side of center screw (8).
2. Remove two nuta (5), screws (7), and spacers (4) from leaf clips (6).
3. Remove nut (2) and center screw (8) from front spring (l).

WARNING

Individual plates of the leaf spring assembly are under tension. Release tension slowly during disassembly. Failure to do so may result in injury to personnel.

4. Remove two C-clamps and four plates (3) from front spring (1).
5. Compress front spring (1) by placing a C-clamp on each side of the hole.
6. Remove two nuts (10), screws (13), and spacers (9) from leaf clips (12).
7. Remove two C-clamps and plate (11) from front spring (1).
8. Compress front spring (1) by placing a C-clamp on each side of hole.
9. Remove two nuts (15), screws (17), and spacers (14) from leaf clips (16).
10. Remove two C-clamps and five plates (18) from front spring (1).
11. Remove eye plate (19) from leaf plate (21).
12. Remove two bushings (20) from eye plate (19).

7-16. SPRING MAINTENANCE (Contd)

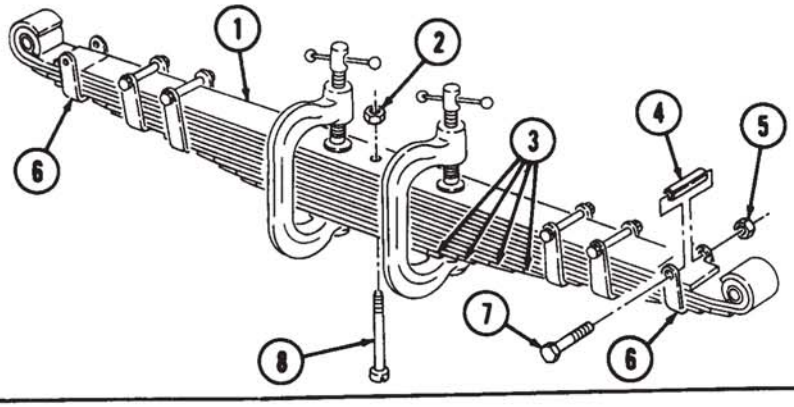

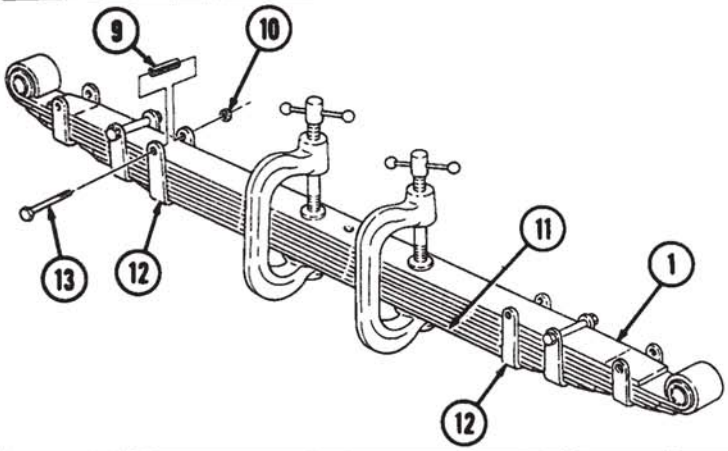

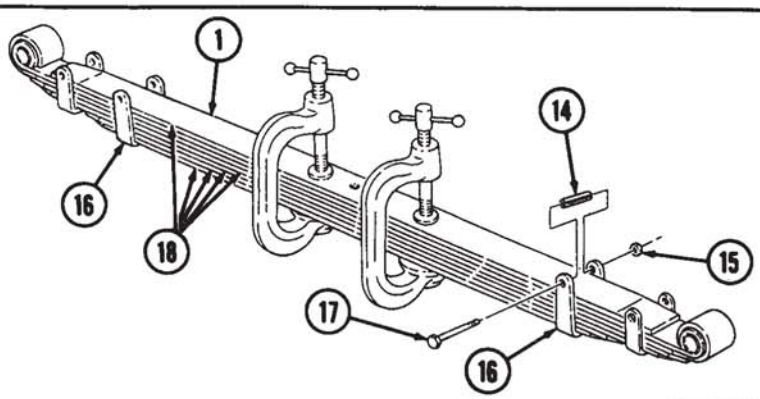

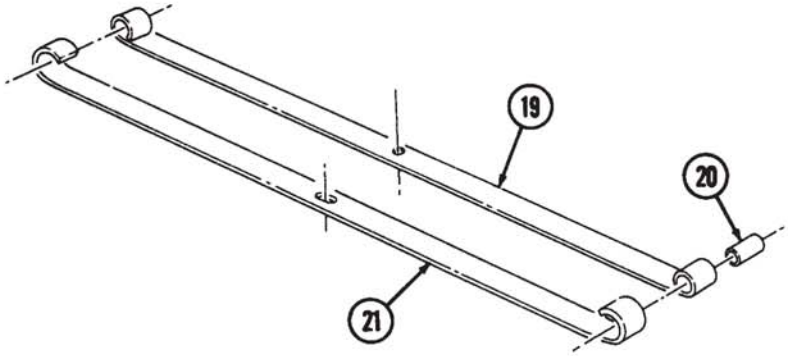

7-16. SPRING MAINTENANCE (Contd)

b. Cleaning and Inspection

WARNING

Eye protection is required when using a wire brush for cleaning. Failure to do so may result in injury to personnel.

1. Clean all parts with a wire brush to remove dirt, rust, and corrosion.

WARNING

Drycleaning solvent is flammable, and will not be used near open flame. Use only in well-ventilated places. Keep fire extinguisher nearby when using drycleaning solvent. Failure to do so may result in injury to personnel.

2. Clean all parts with drycleaning solvent. Dry each part with a clean rag.
3. Inspect parts for cracks and breaks. Replace parts if cracked or broken.

   Inspect parts for wear and damage. Replace parts if worn or damaged.

c. Assembly

1. Install two bushings (2) on eye plate (1).
2. Install eye plate (1) on leaf plate (3).

NOTE

Use center screw to aline the plates.

3. Stack, aline, and compress five plates (8), eye plate (1), and leaf plate (3) by placing a C-clamp on each side of hole.
4. Install two screws (7) and spacers (4) on leaf clips (6) with nuts (5).
5. Remove two C-clamps from plate group (8).
6. Stack, aline, and compress plate (12) by placing a C-clamp on each side of hole.
7. Install two screws (13) and spacers (9) on leaf clips (11) with nuts (10).
8. Remove two C-clamps from plate group (12).
9. Stack, aline, and compress four plates (20) by placing a C-clamp on each side of hole.
10. Install center screw (19) through plates (20) with nut (14). Tighten nut (14) 120 lb-ft (163 N•m).
11. Install two screws (18) and spacers (15) on leaf clips (17) with nuts (16) .
12. Remove two C-clamps from spring (21).

7-16. SPRING MAINTENANCE (Contd)

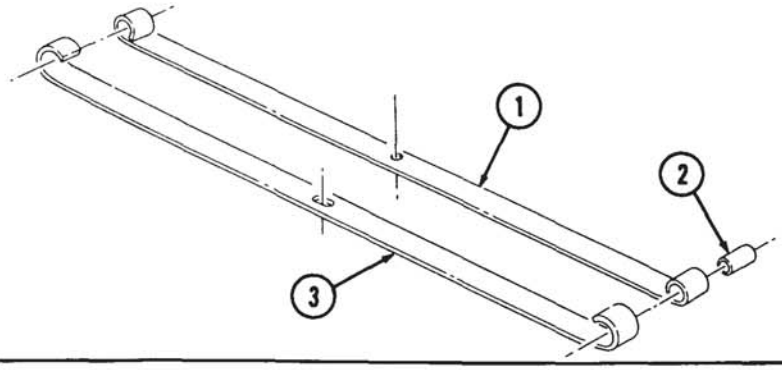

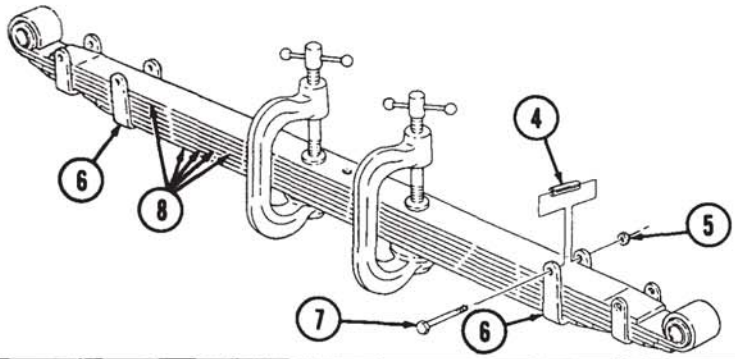

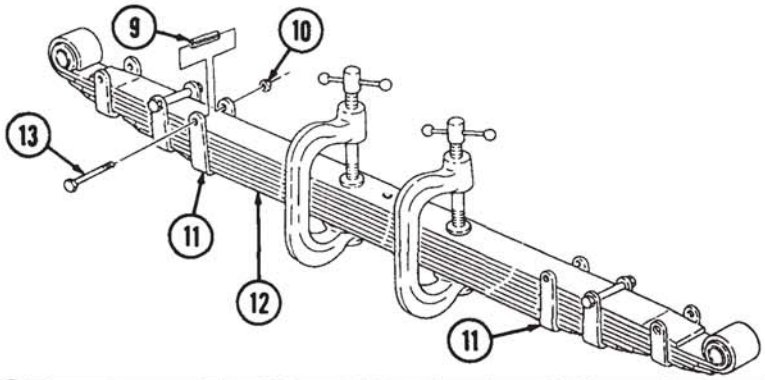

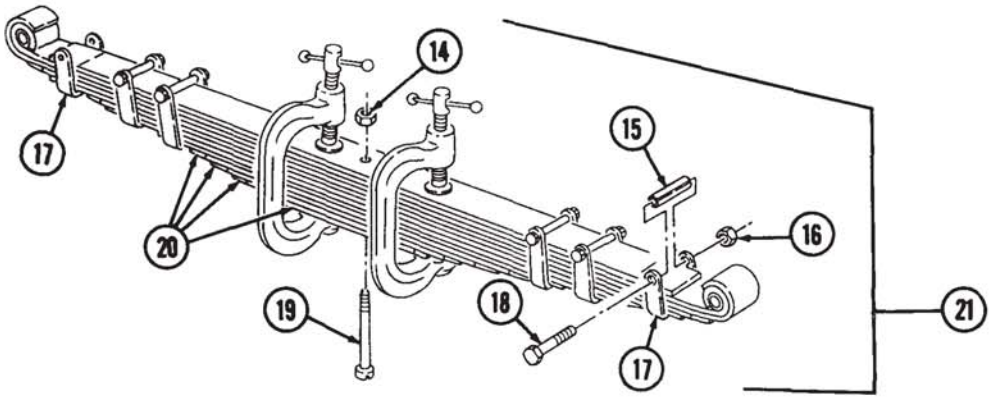

FOLLOW-ON TASK: Install front or rear spring (para. 7-15 or 7-17).

7-17. REAR SPRING REPLACEMENT

THIS TASK COVERS:

a. Removal **b. Installation**

INITIAL SETUP

APPLICABLE MODELS
All

MATERIALS/PARTS
Fourteen lockwashers
Two bushings

REFERENCES (TM)
TM 9-2320-260-10
TM 9-2320-260-20P

EQUIPMENT CONDITION
Ž Parking brake set (TM 9-2320-260-10).
- Rear frame raised and supported (para. 9-2).

GENERAL SAFETY INSTRUCTIONS
- Personnel must stand clear of vehicle when raising the axle.
- Ensure vehicle is firmly supported while spring is removed or installed.

a. Removal

NOTE

Rear leaf springs are replaced basically the same for all models. This procedure covers the M812A1.

1. Remove two screws (12) and lockwashers (13) from spring seat (16). Discard lockwashers (13).

WARNING

Raising the axle while the rear frame is raised and supported may cause the load to shift. Never perform this procedure on both sides of the vehicle at the same time. A shifting load may cause injury to personnel.

NOTE

Perform step 2 on the forward-rear axle. Perform step 2 again on the rear-rear axle.

2. Remove four nuts (9), lockwashers (10), screws (4), bracket (5), and torque rod mounting bracket (11) from each axle (8). Lower supported axle (8). Discard lockwashers (10).
3. Remove four nuts (14) and lockwashers (15) from two U-bolts (3). Discard lockwashers (15).
4. Remove two U-bolts (3) and spring saddle (2) from spring (1).
5. Remove two leaf spring mounting brackets (6) from spring (1).

WARNING

Ensure vehicle is firmly supported while spring is removed. Failure to do so may result in injury to personnel.

NOTE

Assistant will help with step 6.

6. Remove spring (1) from spring seat (16).
7. Remove bushing (7) from each leaf spring mounting bracket (6). Discard bushings (7).

7-17. REAR SPRING REPLACEMENT (Contd)

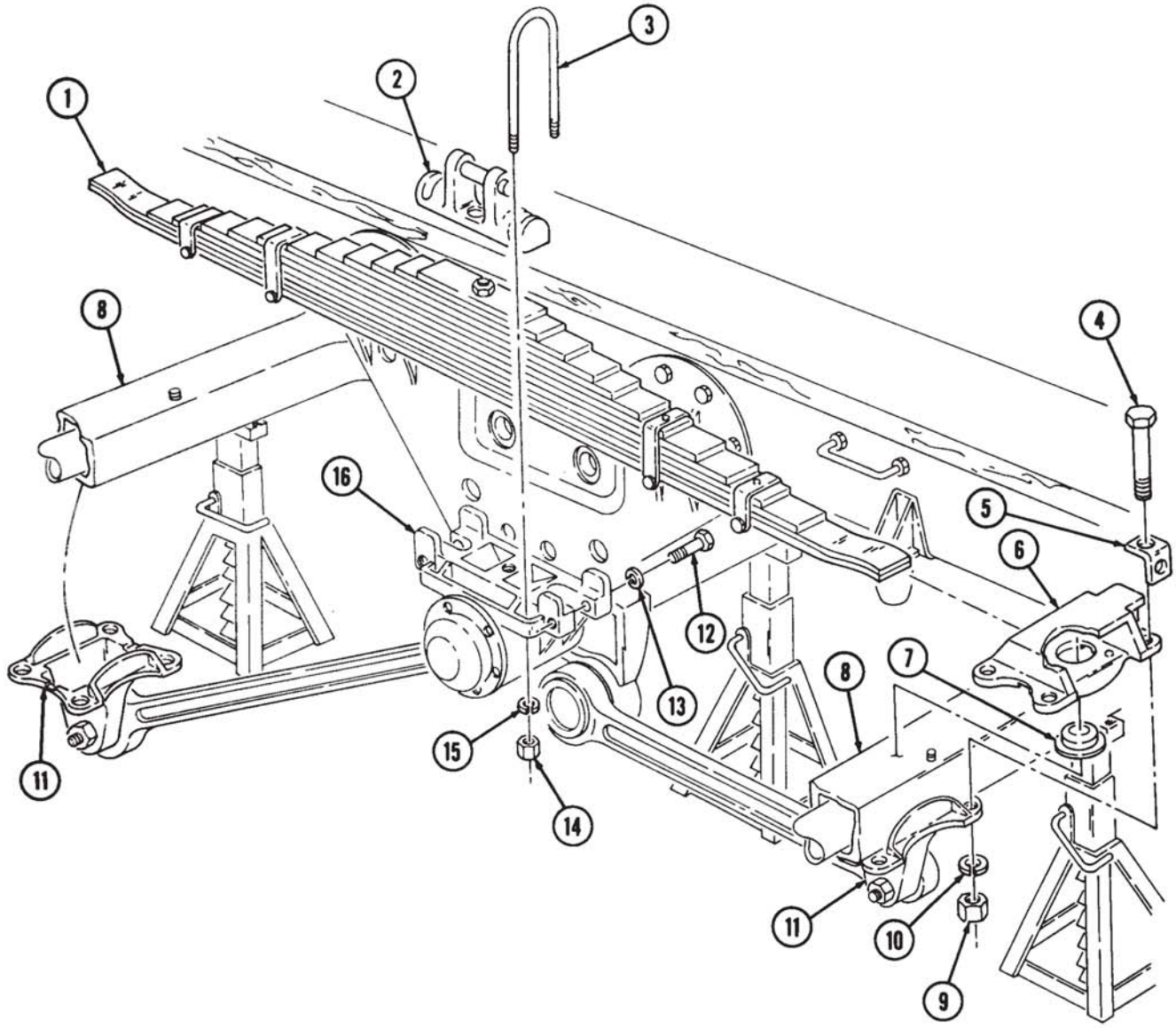

7-17. REAR SPRING REPLACEMENT (Contd)

b. Installation

1. Install new bushing (7) on each leaf spring mounting bracket (6).
2. Position two leaf spring mounting brackets (6) on spring (1).

WARNING

Ensure vehicle is firmly supported while spring is installed. Failure to do so may result in injury to personnel.

NOTE

Assistant will help with step 3.

3. Aline two leaf spring mounting brackets (6) on axles (8) and position spring (1) on spring seat (16).

NOTE

Perform step 4 on the rear-rear axle. Perform step 4 again on the forward-rear axle.

4. Raise and support axle (8). Install bracket (5), leaf spring mounting bracket (6), and torque rod mounting bracket (11) on axle (8) with four screws (4), new lockwashers (10), and nuts (9). Lower supported axle (8). Tighten nuts (9) 200-275 lb-ft (271-373 N•m).
5. Position spring saddle (2) on spring (1) and install with two U-bolts (3), four new lockwashers (15), and nuts (14). Tighten nuts (14) 350-400 lb-ft (475-542 N•m).
7. Install two screws (12) and new lockwashers (13) on spring seat (16). Tighten screws (12) 300-365 lb-ft (407-495 N•m).

NOTE

Upon completion of maintenance, test drive vehicle (TM 9-2320-260-10) and recheck nuts for proper torque, 350-400 lb-ft (475-542 N•m).

7-17. REAR SPRING REPLACEMENT (Contd)

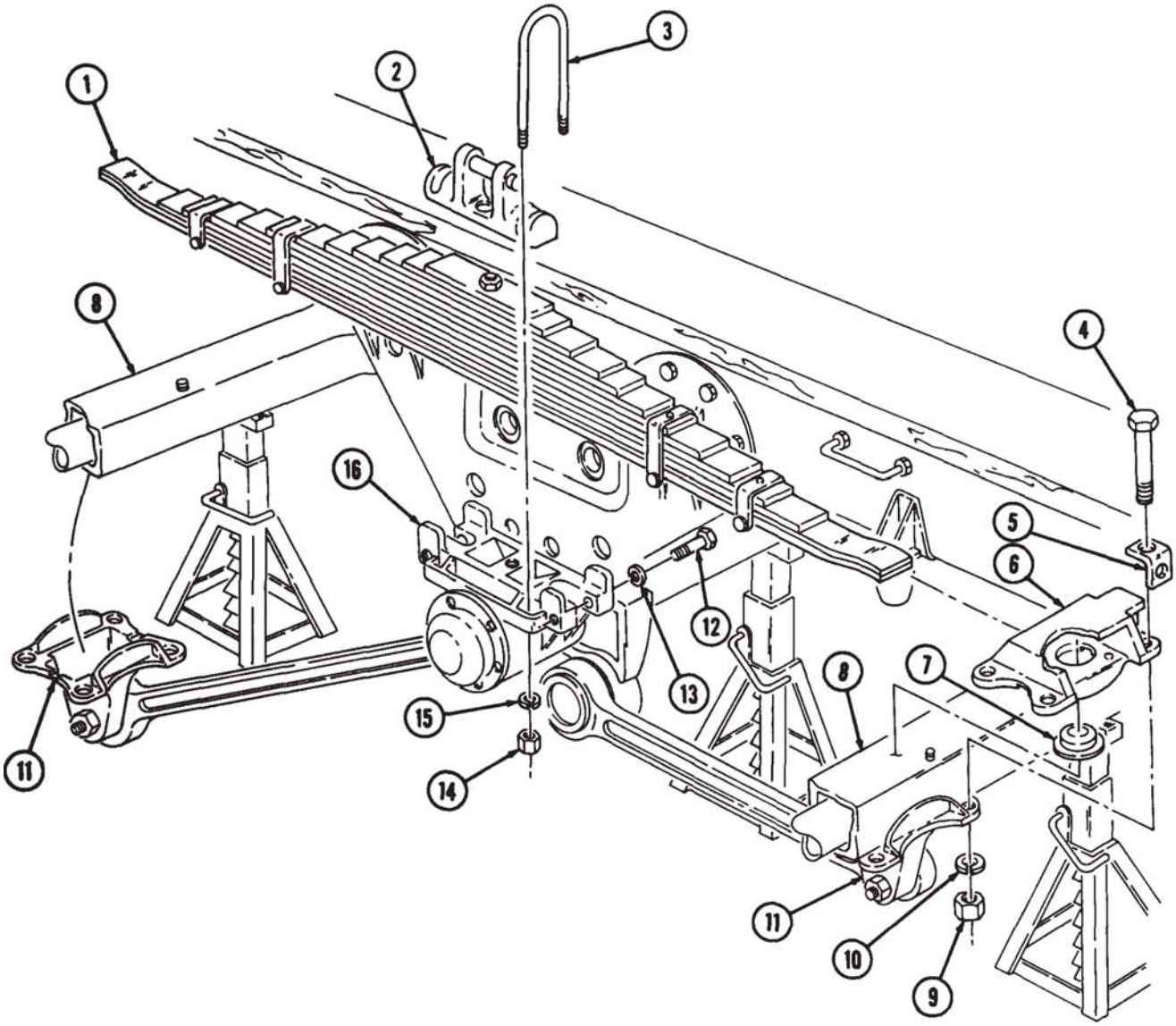

FOLLOW-ON TASK: Lower rear frame (para. 9-2).

7-18. REAR SPRING SEAT MAINTENANCE

THIS TASK COVERS:

a. Removal
b. Cleaning and Inspection
c. Installation

INITIAL SETUP

APPLICABLE MODELS

All

MATERIALS/PARTS

Six lockwashers
Key washer
Gasket
Seal
Drycleaning solvent (Appendix C, Item 29)
Wiper
Rags (Appendix C, Item 22)

REFERENCES (TM)

LO 9-2320-260-12
TM 9-214
TM 9-2320-260-10
TM 9-2320-260-20P

EQUIPMENT CONDITION

- Parking brake set (TM 9-2320-260-10).
- Vehicle-raised and supported by rear frame (para. 9-21.
- Rear spring removed (para. 7-17).

GENERAL SAFETY INSTRUCTIONS

- Ensure vehicle is firmly supported.
- Keep fire extinguisher nearby when using dry cleaning solvent.

NOTE

Rear spring seat maintenance may be performed with the cross tube removed from vehicle (para. 7-20). This procedure is performed with cross tube installed on vehicle.

a. Removal

WARNING

Ensure vehicle is firmly supported during removal of spring seat. Failure to do so may result in injury to personnel.

1. Remove six screws (18), lockwashers (17), cap (16), and gasket (15) from spring seat (14). Discard lockwashers (17) and gasket (15).
2. Remove nut (9), key washer (10), adjusting nut (11), outer bearing (12), and spring seat (14) from cross tube (4). Discard key washer (10).
3. Remove inner bearing (2), retainer (3), seal (8), wiper (7), support (6), and washer (5) from cross tube (4). Discard seal (8) and wiper (7).
4. Remove races (1) and (13) from spring seat (14).

7-18. REAR SPRING SEAT MAINTENANCE (Contd)

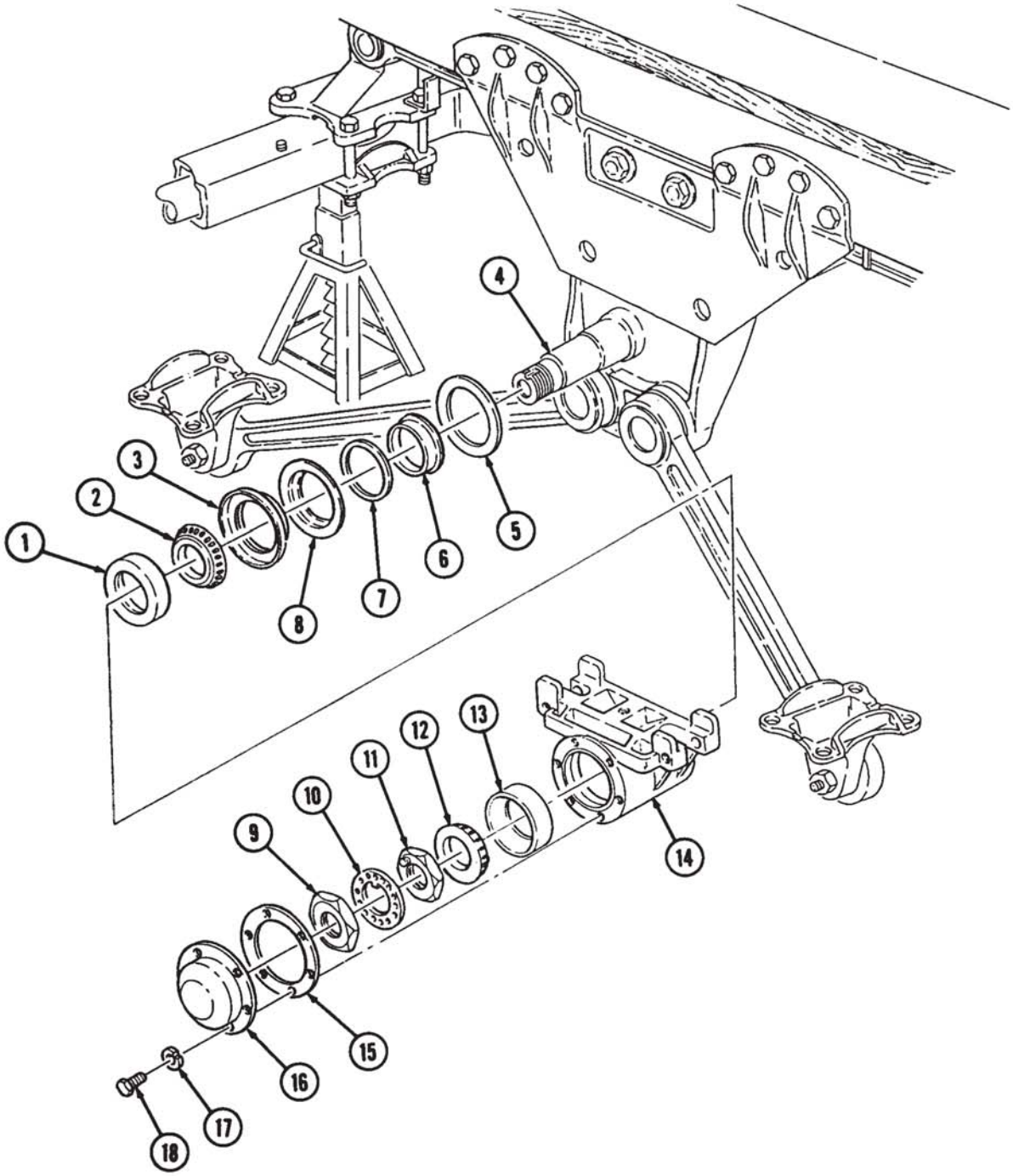

7-18. REAR SPRING SEAT MAINTENANCE (Contd)

b. Cleaning and Inspection

WARNING

Drycleaning solvent is flammable and will not be used near open flame. Use only in well-ventilated places. Keep fire extinguisher nearby when using drycleaning solvent. Failure to do so may result in injury to personnel.

1. Clean all parts with drycleaning solvent. Dry all parts with a clean rag,
2. Inspect all parts for cracks, pitting, and scoring. Replace parts if damaged.
3. Inspect outer bearing (14) and inner bearing (2) (TM 9-214). Replace outer bearing (14) and inner bearing (2) if damaged.

c. Installation

WARNING

Ensure vehicle is firmly supported during installation of spring seat. Failure to do so may result in injury to personnel.

1. Install races (1) and (15) on spring seat (16).
2. Install washer (5), support (6), new wiper (7), new seal (8), retainer (3), and inner bearing (2) on cross tube (4).
3. Install spring seat (16), outer bearing (14), and adjusting nut (13) on cross tube (4).
4. Hook end of scale (19) on spring seat (16).
5. Tighten adjusting nut (13) and pull scale (19) downward until spring seat (16) begins to swivel on cross tube (4). Observe scale for reading. Correct measurement is 15-20 lb-ft (20-27 N•m).
6. If scale measurement is greater than 20 lb-ft (27 N•m), or less than 15 lb-ft (20 N•m), loosen adjusting nut (13) and repeat step 5 until correct measurement is obtained.
7. Install new key washer (12) and nut (11) on cross tube (4) and repeat step 5 to ensure correct adjusting measurement of 15-20 lb-ft (20-27 N•m) is obtained. Tighten nut (11) when correct measurement is obtained.
8. Install new gasket (10) and cap (9) on spring seat (16) with six new lockwashers (17) and screws (18). Tighten screws (18) 16-20 lb-ft (22-27 N•m).

7-18. REAR SPRING SEAT MAINTENANCE (Contd)

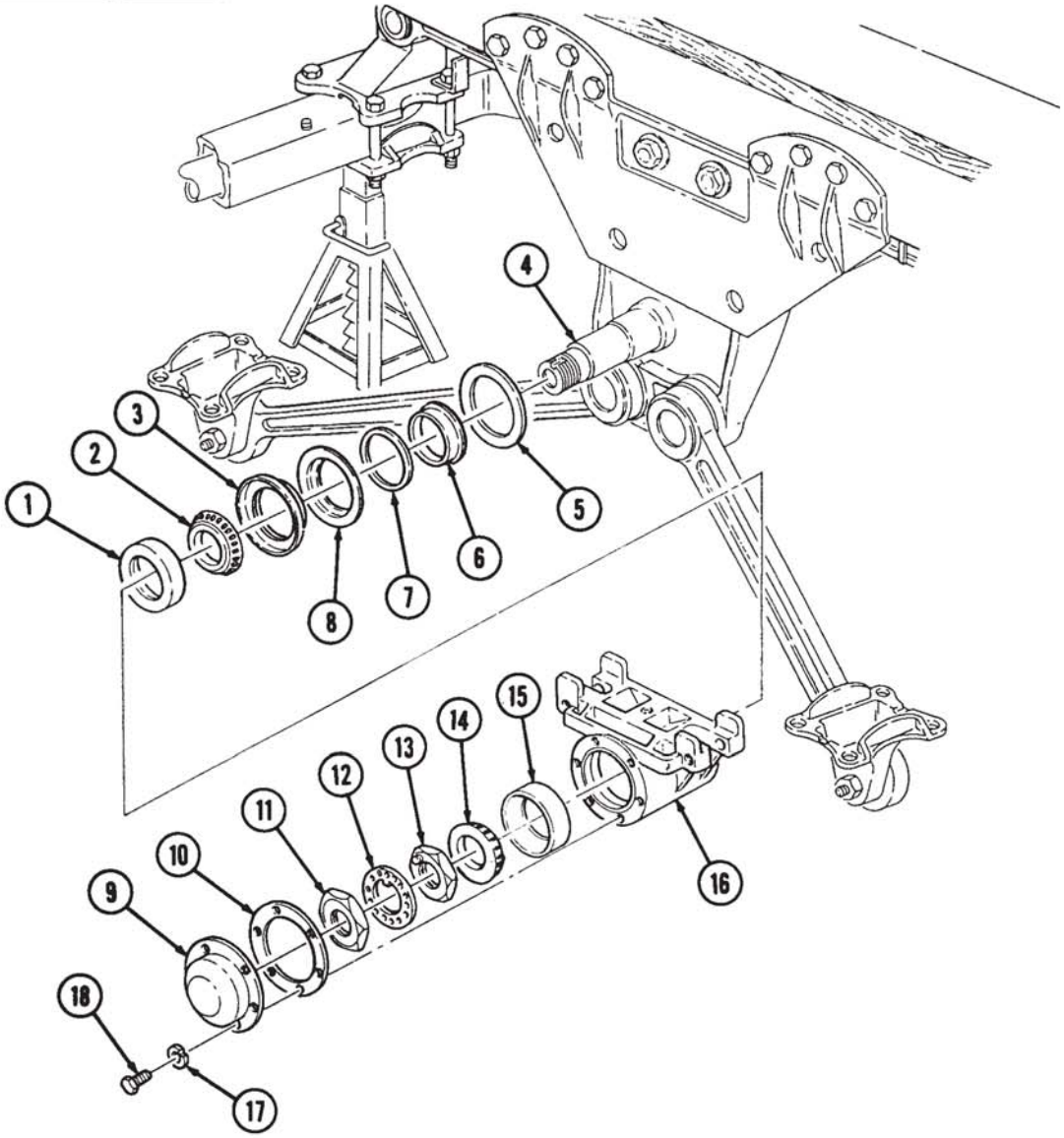

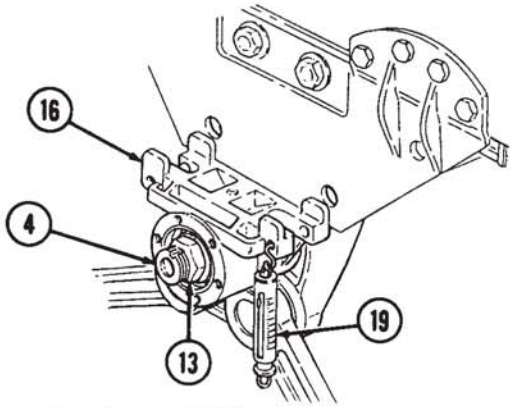

FOLLOW-ON TASKS: • Install rear spring (para. 7-17).
• Lower vehicle (para. 9-2).

7-19. SHOCK ABSORBER REPLACEMENT

THIS TASK COVERS:

a. Removal **b. Installation**

INITIAL SETUP

APPLICABLE MODELS
All

MATERIALS/PARTS
Four locknuts
Four bushings

REFERENCES (TM)
TM 9-2320-260-10
TM 9-2320-260-20P

EQUIPMENT CONDITION
- Parking brake set (TM 9-2320-260-10).
- Front wheel removed (para. 9-3).

a. Removal

1. Remove locknut (9), washer (8), and bushing (7) from each mounting pin (4). Discard locknuts (9) and bushings (7).
2. Remove shock absorber (10) from two mounting pins (4).
3. Remove bushing (6) and washer (5) from each mounting pin (4). Discard bushings (6).
4. Remove locknut (12), screw (13), and mounting pin (4) from lower spring seat (11). Discard locknut (12).
5. Remove locknut (1), screw (2), and mounting pin (4) from bracket (3). Discard locknut (1).

b. Installation

1. Install mounting pin (4) on lower spring seat (11) with screw (13) and new locknut (12).
2. Install mounting pin (4) on bracket (3) with screw (2) and new locknut (1).
3. Install washer (5) and new bushing (6) on each mounting pin (4).
4. Install shock absorber (10) on two mounting pins (4).
5. Install new bushing (7), washer (8), and new locknut (9) on each mounting pin (4). Tighten locknuts (9) 70-85 lb-ft (95-115 N•m).

7-19. SHOCK ABSORBER REPLACEMENT (Contd)

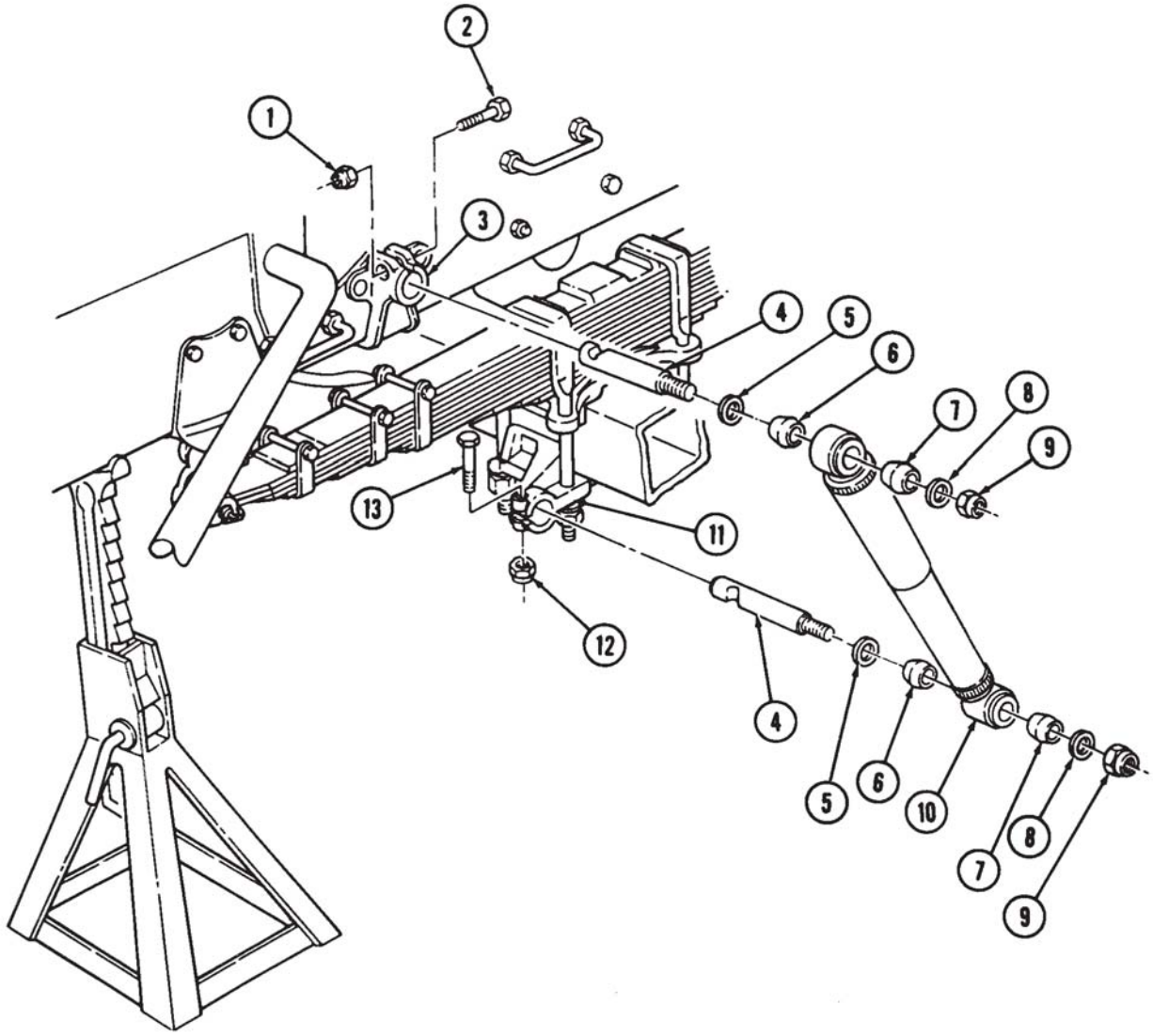

FOLLOW-ON TASK Install front wheel (para. 9-3).

7-20. CROSS TUBE (TRUNNION AXLE) REPLACEMENT

THIS TASK COVERS:

a. Removal **b. Installation**

INITIAL SETUP

APPUCABLE MODELS
All

MATERIALS/PARTS
Four cotter pins
Eight locknuts
Eight lockwashers

REFERENCES (TM)
TM 9-2320-260-10
TM 9-2320-260-20P

EQUIPMENT CONDITION
- Parking brake set (TM 9-2320-260-10).
- Vehicle-raised and supported by frame (para. 9-2).

a. Removal

1. Remove four cotter pins (5) from nuts (4). Discard cotter pins (5).
2. Remove four nuts (4) from torque rods (6).
3. Remove four torque rods (6) from cross tube (9).
4. Support cross tube (9).

NOTE

Assistant will help with steps 5 and 6.

5. Remove eight nuts (7) and lockwashers (8) from four U-bolts (1). Discard lockwashers (8).
6. Remove eight locknuts (3), screws (2), and cross tube (9) from two cross tube mounting brackets (10). Discard locknuts (3).

b. Installation

NOTE

Assistant will help with step 1.

1. Position and install cross tube (9) on two cross tube mounting brackets (10) with eight screws (2) and new locknuts (3).
2. Install eight new lockwashers (8) and nuts (7) on four U-bolts (1). Tighten nuts (7) 350-400 lb-ft (475-542 N•m).
3. Install four torque rods (6) on cross tube (9).
4. Install four nuts (4) on torque rods (6) with new cotter pins (5).

NOTE

Upon completion of maintenance, test drive vehicle (TM 9-2320-260-10) and recheck nuts for proper torque, 350-400 lb-ft (475-542 N•m).

7-20. CROSS TUBE (TRUNNION AXLE) REPLACEMENT (Contd)

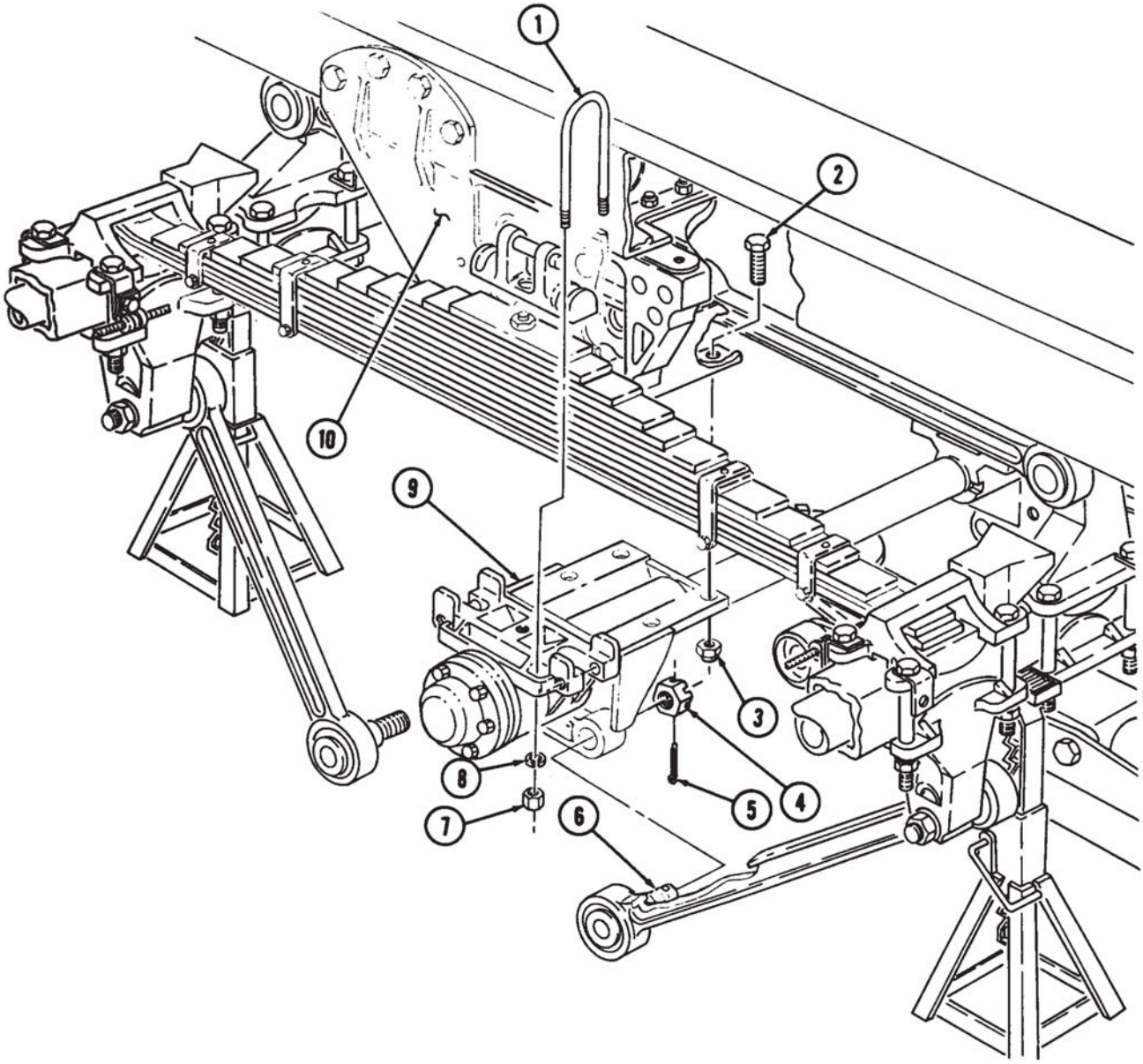

FOLLOW-ON TASK Lower vehicle (para. 9-2).

7-21. TORQUE RODS REPLACEMENT

THIS TASK COVERS:

a. Removal **b. Installation**

INITIAL SETUP

APPUCABLE MODELS
All

MATERIALS/PARTS
Two cotter pins

REFERENCES (TM)
TM 9-2320-260-10
TM 9-2320-260-20P

EQUIPMENT CONDITION
- Parking brake set (TM 9-2320-260-10).
- Rear axles raised and supported (para. 9-2).

NOTE

There are a total of six torque rods. Two are on the left side of the vehicle. All torque rods are replaced basically the same. This procedure covers lower torque rods.

a. Removal

1. Remove cotter pins (2) and (6) from nuts (3) and (5). Loosen nut (3) and discard cotter pins (2).
2. Remove nut (5) and torque rod (1) from torque rod mounting bracket (4).
3. Remove nut (3) and torque rod (1) from cross tube (7).

b. Installation

1. Install torque rod (1) on cross tube (7) with nut (3). Do not tighten nut (3).
2. Install torque rod (1) on torque rod mounting bracket (4) with nut (5).
3. Tighten nuts (3) and (5) 350-400 lb-ft (475-542 N•m).
4. Install new cotter pins (2) and (6) on nuts (3) and (5).

7-21. TORQUE RODS REPLACEMENT (Contd)

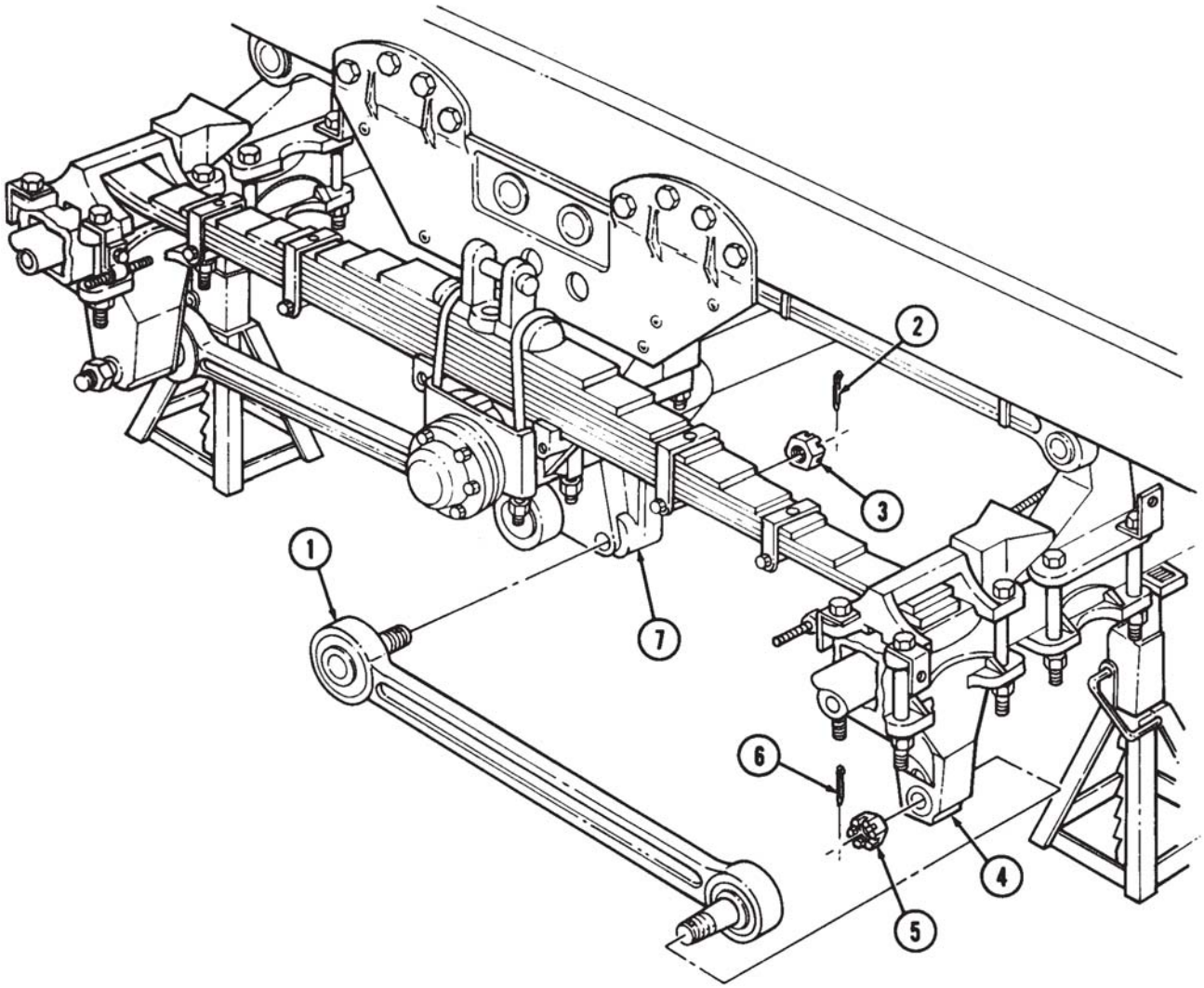

FOLLOW-ON TASK Lower rear axles (para. 9-2).

CHAPTER 8
MECHANICAL PARKING BRAKE, COMPRESSED AIR, AND SERVICE BRAKE SYSTEM MAINTENANCE

Section I. Mechanical Parking Brake Maintenance (page 8-1)
Section II. Service Brakes and Hydraulic System Maintenance (page 8-13)
Section III. Compressed Air and Brake System Maintenance (page 8-38)

Section I. MECHANICAL PARKING BRAKE MAINTENANCE

8-1. MECHANICAL PARKING BRAKE MAINTENANCE INDEX

PARA. NO.	TITLE	PAGE NO.
8-2.	Parking Brake Lever Replacement	8-1
8-3.	Parking Brake Cable Replacement	8-4
8-4.	Parking Brakeshoe Maintenance	8-6
8-5.	Parking Brakeshoe Adjustment	8-10
8-6.	Parking Brakedrum Replacement	8-12

8-2. PARKING BRAKE LEVER REPLACEMENT

THIS TASK COVERS:

a. Removal **b. Installation**

INITIAL SETUP

APPLICABLE MODELS
All

MATERIAIS/PARTS
Eight locknuts
Cotter pin

REFERENCES (TM)
TM 9-2320-260-10
TM 9-2320-260-20P

EQUIPMENT CONDITION
- Front wheels chocked (TM 9-2320-260-10).
- Parking brake set (TM 9-2320-260-10).

8-2. PARKING BRAKE LEVER REPLACEMENT (Contd)

a. Removal

NOTE

Note all bracket and clamp positions prior to removal.

1. Turn brake lever knob (21) counterclockwise to release brake cable (11) tension.
2. Remove cotter pin (4), washer (3), straight pin (20), and clevis (8) from brake lever (2). Discard cotter pin (4).
3. Remove two locknuts (5), screws (18), and brake lever (2) from brackets (7) and (19). Discard locknuts (5).
4. Remove four locknuts (6), locknut (16), screw (17), and brackets (7), (10), and (19) from cab floor (9). Discard locknuts (6) and (16).
5. Remove clevis (8) from brake cable (11).
6. Pull brake cable (11) and bracket (10) from under cab (1).
7. Remove two locknuts (15), screws (12), clamp (13), spacer 14), and brake cable (11) from bracket (10). Discard locknuts (15).

b. Installation

1. Insert brake cable (11) through hole of bracket (10) and install spacer (14), brake cable (11). and clamp (13) on bracket (10) with two screws (12) and new locknuts (15).
2. Install bracket (19) on cab floor (9) with screw (17) and new locknut (16).
3. Place brake cable (11) and bracket (10) under cab (1) and install brackets (7) and (10) on cab floor (9) with four new locknuts (6).
4. Install clevis (8) on brake cable (11).
5. Install brake lever (2) on brackets (7) and (19) with two screws (18) and new locknuts (5).
6. Install clevis (8) on brake lever (2) with straight pin (20), washer (3), and new cotter pin (4).

8-2. PARKING BRAKE LEVER REPLACEMENT (Contd)

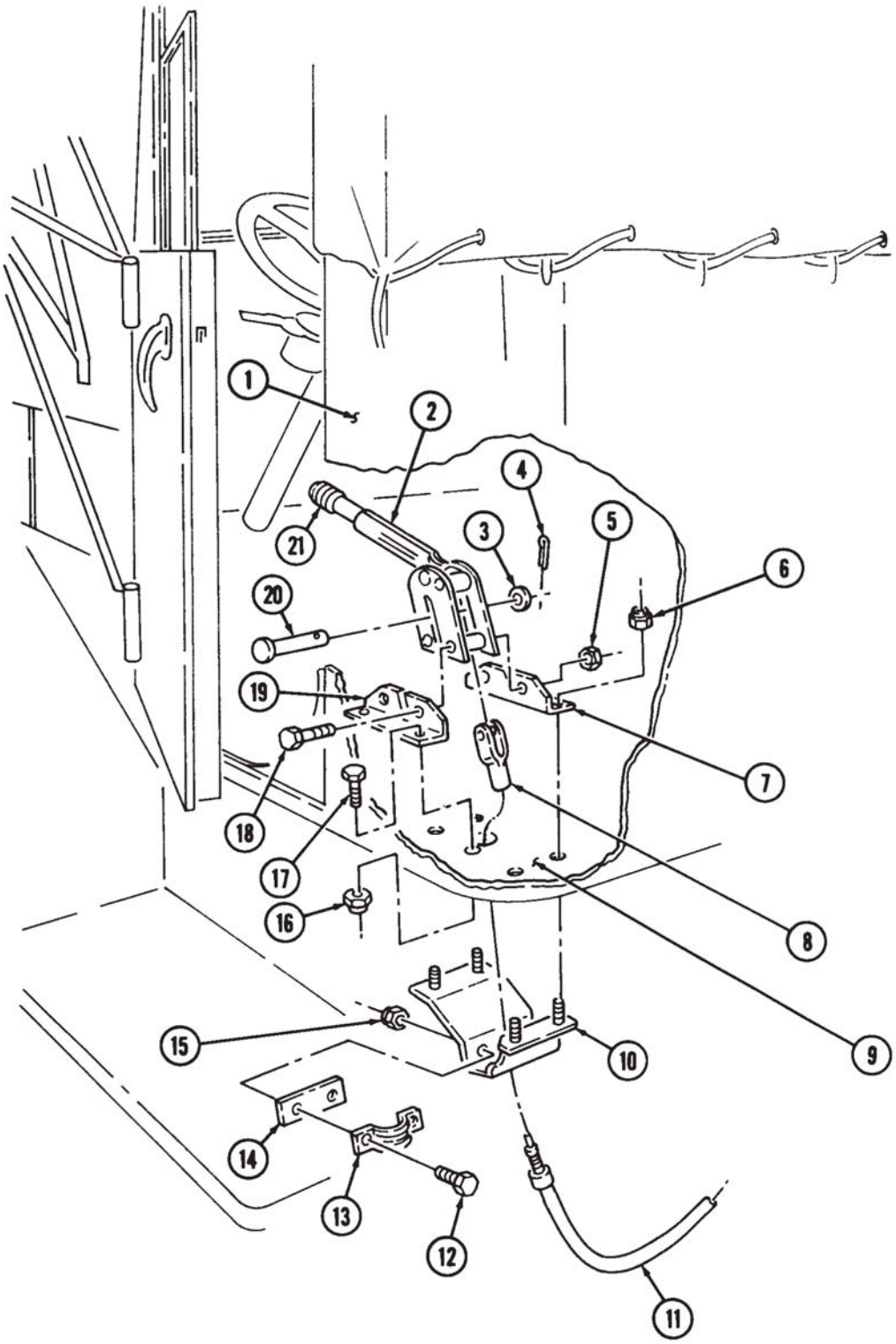

FOLLOW-ON TASK Adjust parking brake (TM 9-2320-260-10).

8-3. PARKING BRAKE CABLE REPLACEMENT

THIS TASK COVERS:

a. Removal **b. Installation**

INITIAL SETUP

APPLICABLE MODELS
All

MATERIALS/PARTS
Seven locknuts

REFERENCES (TM)
TM 9-2320-260-10
TM 9-2320-260-20P

EQUIPMENT CONDITION
- Front wheels chocked (TM 9-2320-260-10).
- Parking brake released (TM 9-2320-260-10).
- Parking brake lever removed (para. 8-1).

a. Removal

1. Remove four locknuts (15), screws (13), two clamps (17), eight washers (16), and wear plate (14) from brake cable (3). Discard locknuts (15).
2. Remove locknut (19), screw (2), clamp (1), and brake cable (3) from bracket (20). Discard locknut (19).

NOTE

Measure parking brake cable nut position on threaded end of brake cable for installation.

3. Remove jamnut (9), adjusting nut (10), and threaded end (7) of brake cable (3) from lever (8).
4. Remove two locknuts (12), screws (5), clamp (6), brake cable (3), and spacer (4) from transfer case bracket (11). Discard locknuts (12).

b. Installation

1. Insert threaded end (7) of brake cable (3) through eye of lever (8) and install adjusting nut (10) to previously measured distance on threaded end (7) of brake cable (3).
2. Install jamnut (9) on threaded end (7) of brake cable (3) and tighten jamnut (9) against adjusting nut (10).
3. Install spacer (4), brake cable (3), and clamp (6) on transfer case bracket (11) with two screws (5) and new locknuts (12).
4. Install wear plate (14) on brake cable (3) approximately 12 in. (30.5 mm) from end of brake cable (3) with eight washers (16), two clamps (17), four screws (13), and new locknuts (15). Do not tighten locknuts (15).
5. Adjust position of wear plate (14) to protect brake cable (3) from rubbing edge of toolbox (18). Tighten locknuts (15).
6. Install brake cable (3) on bracket (20) with clamp (1), screw (2), and new locknut (19).

8-3. PARKING BRAKE CABLE REPLACEMENT (Contd)

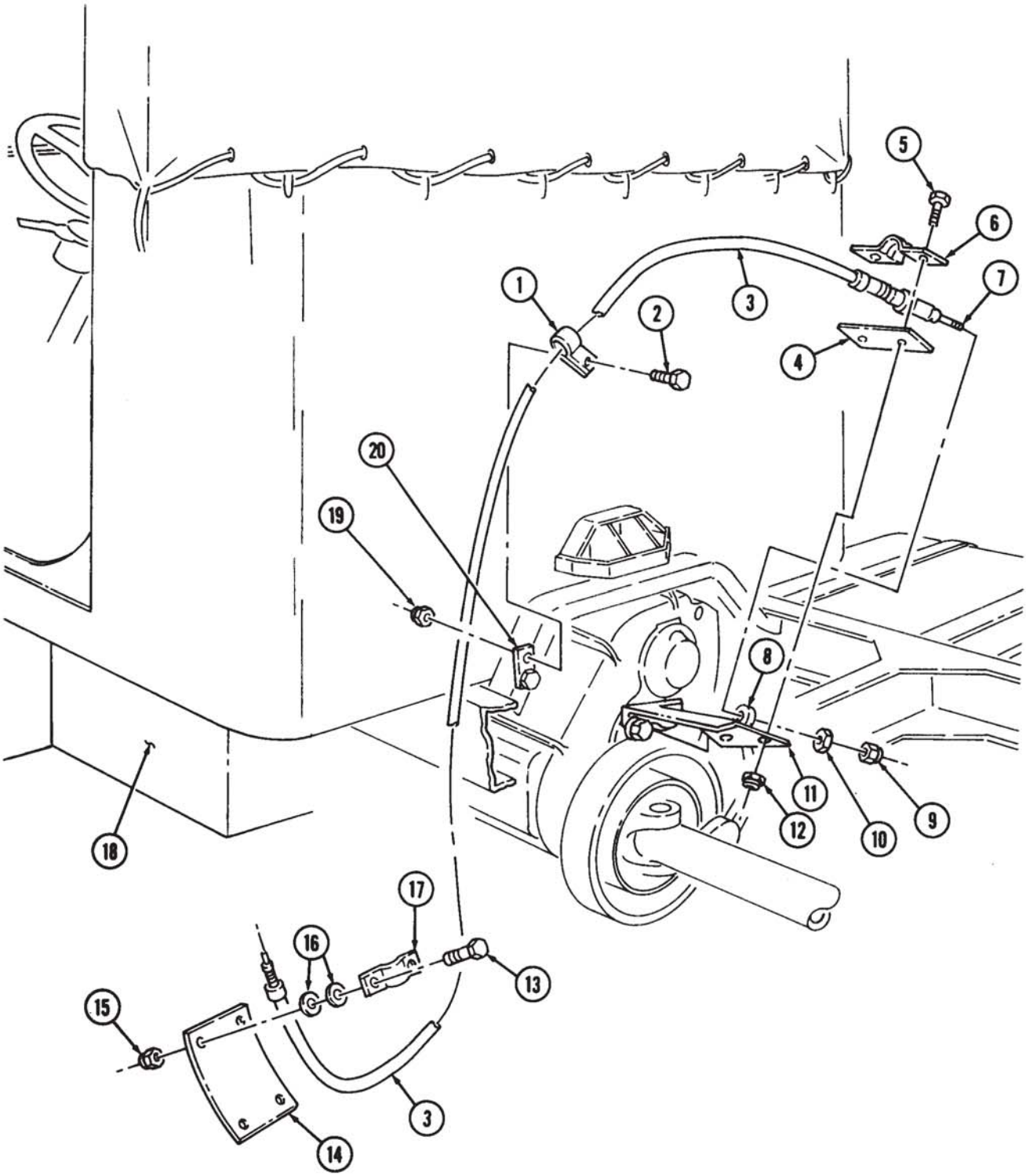

FOLLOW-ON TASKS: • Install parking brake lever (para. 8-2).
• Adjust parking brakeshoe (para. 8-5).

8-4. PARKING BRAKESHOE MAINTENANCE

THIS TASK COVERS:

a. Removal
b. Disassembly
c. Cleaning and Inspection
d. Assembly
e. Installation

INITIAL SETUP

APPLICABLE MODELS
All

MATERIALS/PARTS
Two slotted rings
Two retaining rings
Lockwasher
Rags (Appendix C, Item 22)
Drycleaning solvent (Appendix C, Item 29)

REFERENCES (TM)
LO 9-2320-260-12
TM 9-2320-260-10
TM 9-2320-260-20P

EQUIPMENT CONDITION
- Front wheels chocked (TM 9-2320-260-10).
- Parking brake released (TM 9-2320-260-10).

GENERAL SAFETY INSTRUCTIONS
- Keep fire extinguisher nearby when using drycleaning solvent.
- Do not use dry brush or compressed air to clean brakeshoes.

NOTE

Brakeshoes must be replaced as a matched set.

a. Removal

1. Remove lever retracting spring (5) from brake lever (6) and bracket (4).
2. Loosen nut (9) and remove brakeshoe retracting spring (8) from outer brakeshoe (7) and adjusting screw (10).

NOTE

Mark threaded end of parking brake cable nut position for installation.

3. Remove jamnut (3), adjusting nut (2), and parking brake cable (1) from brake lever (6).
4. Remove nut (13), screw (15), inner and outer brakeshoes (11) and (7), and washer (14) from brakedrum (16) and transfer case cap (12).

b. Disassembly

1. Remove two slotted rings (24), retaining clip (23), and four washers (22) from eccentric pin (21) and mounting pin (25). Discard slotted rings (24).
2. Remove two retaining rings (18) and brake lever (6) from inner and outer brakeshoes (11) and (7). Discard retaining rings (18).
3. Remove nut (19), lockwasher (20), and eccentric pin (21) from outer brakeshoe (7). Discard lockwasher (20).
4. Remove mounting pin (25) from inner brakeshoe (11).
5. Remove two lubrication fittings (17) from inner and outer brakeshoes (11) and (7), if damaged.

8-4. PARKING BRAKESHOE MAINTENANCE (Contd)

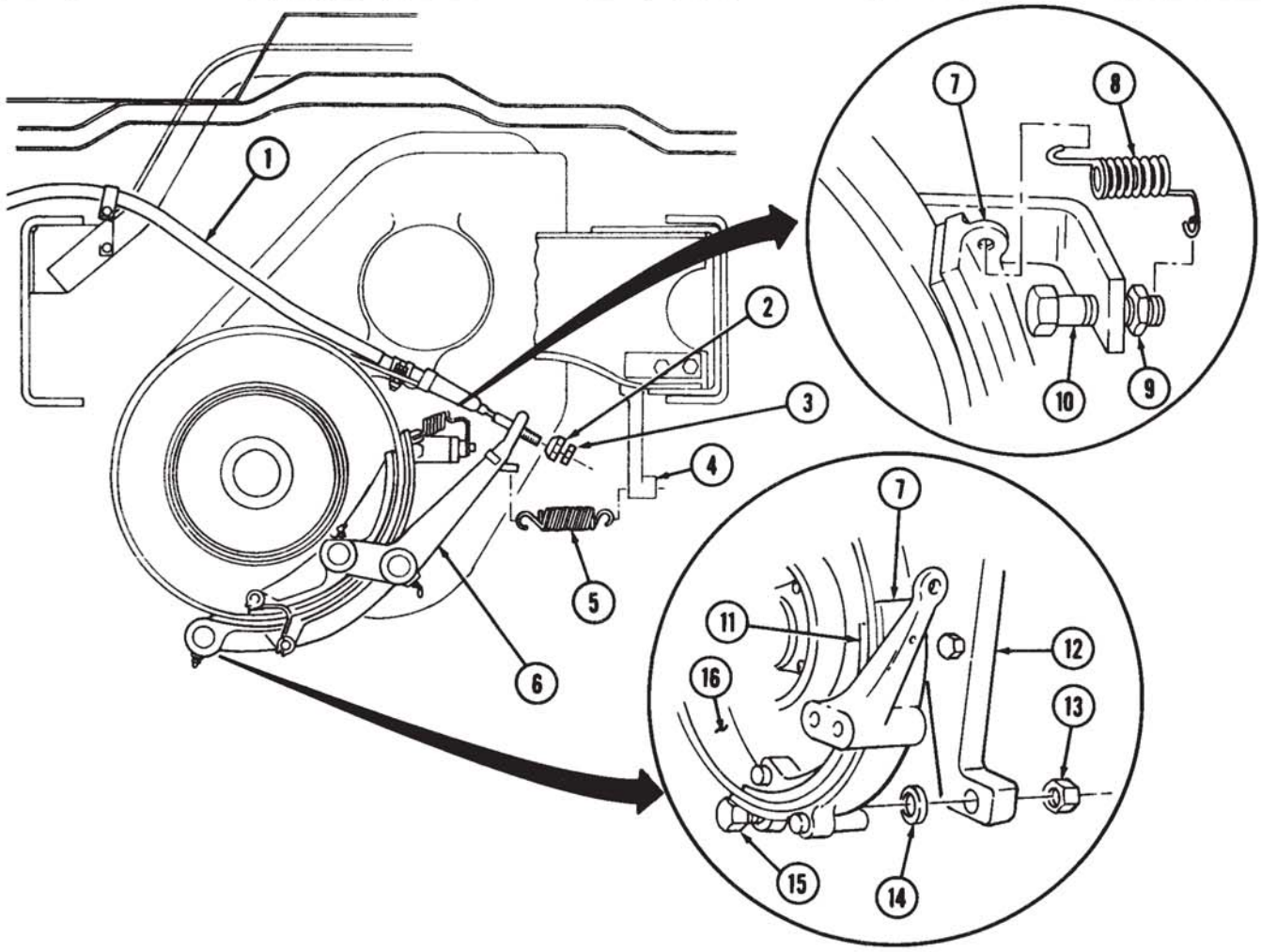

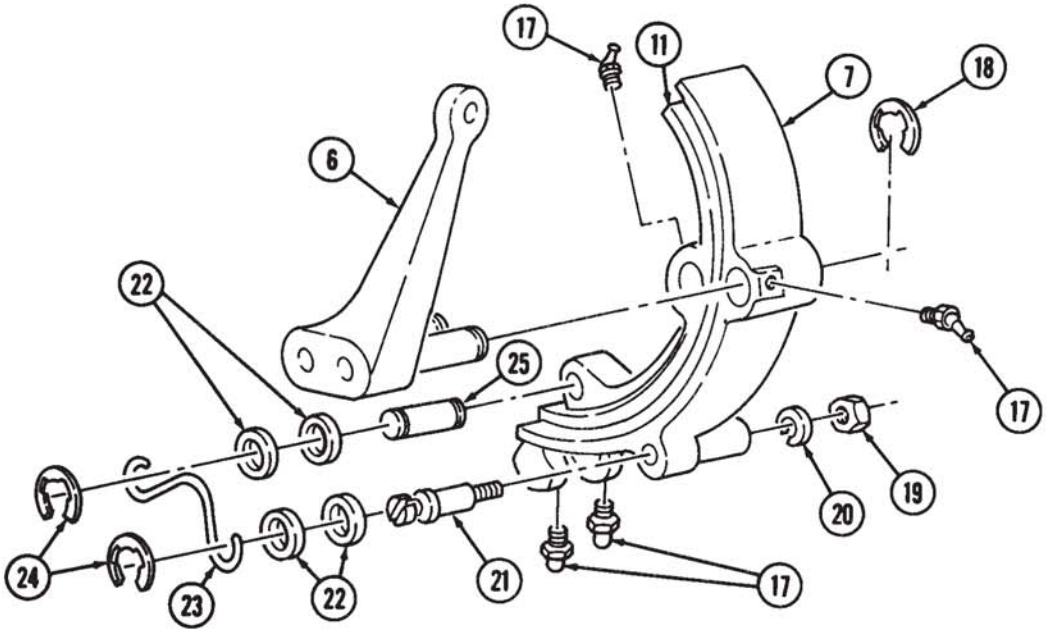

8-4. PARKING BRAKESHOE MAINTENANCE (Contd)

c. Cleaning and Inspection

WARNING

- Do not use a dry brush or compressed air to clean brakeshoes. There may be asbestos dust on brakeshoes which can be dangerous to your health if you breathe it. (Brakeshoes must be wet, and use soft bristle brush.)
- Drycleaning solvent is flammable and will not be used near open flame. Use only in well-ventilated places. Failure to do so may result in injury to personnel.

1. Clean all parts with drycleaning solvent. Remove dirt and corrosion. Do not saturate brakeshoe lining or brakedrum with drycleaning solvent.
2. Measure inner brakeshoe (4) and outer brakeshoe (5) lining thickness at most worn point. Replace if thickness is .188 in. (4.78 mm) or less. (Brakeshoes are repaired at direct support level maintenance.)
3. Inspect inner brakeshoe (4) and outer brakeshoe (5) linings for loose or missing rivets, cracks, breaks, and stripped threads. Replace if rivets are loose or missing. Replace inner brakeshoe (4) or outer brakeshoe (5) if cracked, broken, or threads are stripped.
4. Inspect brake lever (1) for cracks, breaks, and loose pins (2). Replace if cracked, broken, or pins (2) are loose. Pins (2) must be perpendicular to brake lever (1). Ring grooves of pins (2) must be free of chips and burrs.
5. Slot in eccentric pin (9) must be square. Replace eccentric pin (9) if slot is darnaged.
6. Mounting pin (13) must be tight in inner brakeshoe (4) and ring grooves free of chips and burrs. Replace mounting pin (13) if damaged.
7. Inspect lever retracting spring (18) and brakeshoe retracting spring (19) for broken and distorted coils. Replace if coils or hook ends are distorted or damaged.
8. Inspect jamnut (16) and adjusting nut (15) for stripped threads and burred flats. Replace jamnut (16) or adjusting nut (15) if flats are burred or threads are stripped.
9. Inspect screw (25) for breaks, cracks, and stripped threads. Replace screw (25) if broken, cracked, or threads are stripped.
10. Inspect brake cable (14) for cracks, bends, and stripped threads. Replace brake cable (14) if cracked, bent, or threads are stripped.

d. Assembly

1. Install two lubrication fittings (3) on inner brakeshoe (4) and outer brakeshoe (5), if removed.
2. Install mounting pin (13) on inner brakeshoe (4).
3. Install eccentric pin (9) on outer brakeshoe (5) with new lockwasher (8) and nut (7).
4. Install inner brakeshoe (4) and outer brakeshoe (5) on brake lever (1) with two new retaining rings (6).
5. Install four washers (10), retaining clip (11), and two new slotted rings (12) on eccentric pin (9) and mounting pin (13).

e. Installation

1. Install inner brakeshoe (4) and outer brakeshoe (5) on brakedrum (26) and transfer case cap (22) with screw (25), washer (24), and nut (23). Tighten nut (23) to 153-196 lb-ft (207-266 N•m).
2. Insert threaded end of brake cable (14) through eye of brake lever (1) and install adjusting nut (15) to previously marked position. Tighten jamnut (16) against adjusting nut (15).

8-4. PARKING BRAKESHOE MAINTENANCE (Contd)

3. **Install brakeshoe retracting spring** (19) on adjusting screw (21) and outer brakeshoe (5). Tighten nut (20).
4. **Install lever retracting spring** (18) on bracket (17) and brake lever (1).

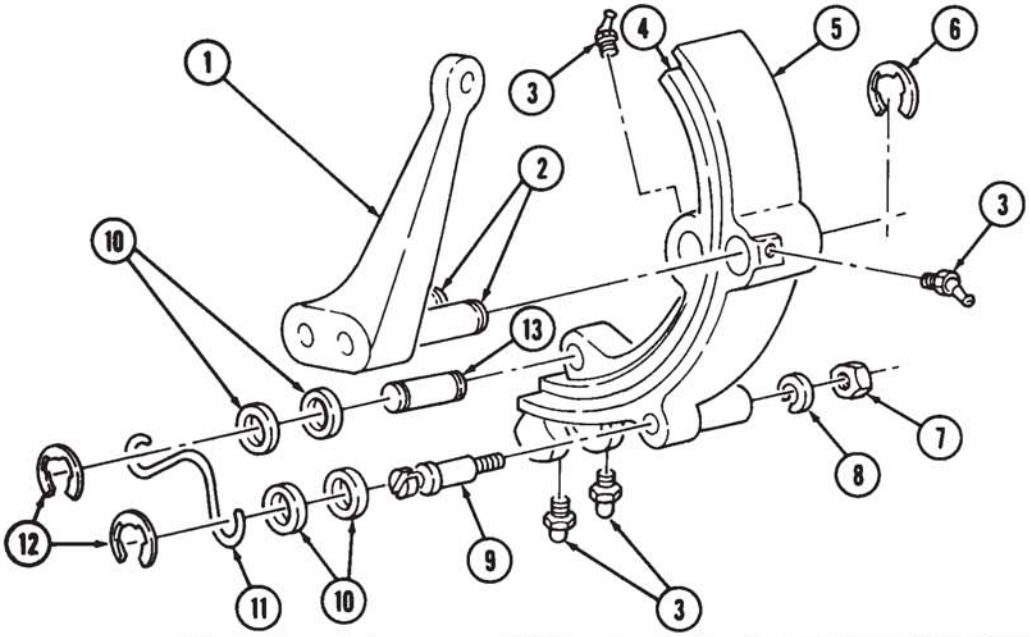

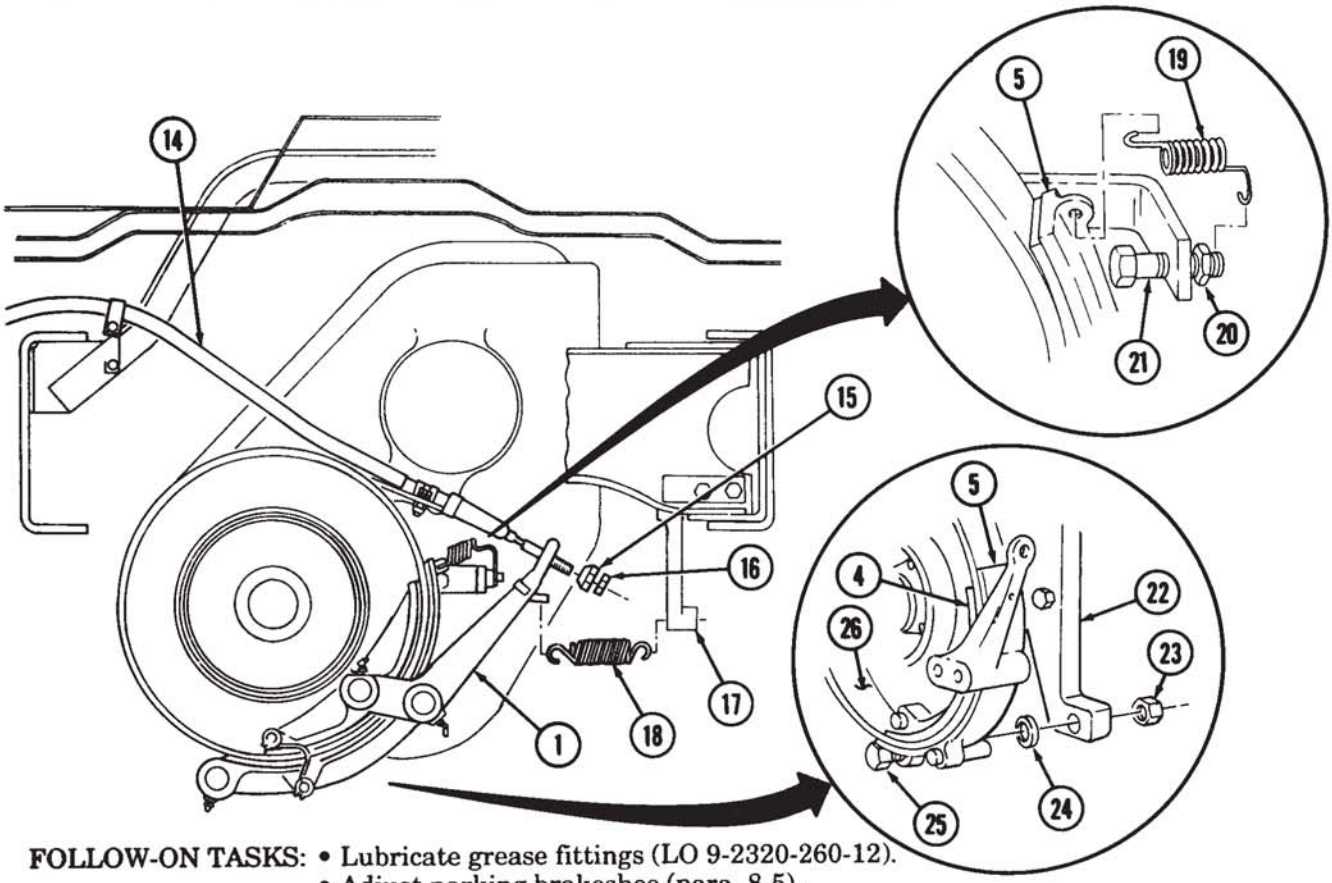

FOLLOW-ON TASKS: • Lubricate grease fittings (LO 9-2320-260-12).
• Adjust parking brakeshoe (para. 8-5).

8-5. PARKING BRAKESHOE ADJUSTMENT

THIS TASK COVERS:

Adjustment

INITIAL SETUP

APPLICABLE MODELS

All

REFERENCES (TM)

TM 9-2320-260-10
TM 9-2320-260-20P

EQUIPMENT CONDITION

- Parking brake released (TM 9-2320-260-10).
- Wheels-chocked (TM 9-2320-260-10).
- Transmission gearshift lever in neutral position (TM 9-2320-260-10).
- Transmission to forward-rear axle propeller shaft removed (para. 7-2).

Adjustment

1. Place parking brake lever (2) in release position. Turn adjusting cap (1) counterclockwise to fully disengage parking brake.
2. Loosen nut (10) and turn adjusting screw (11) to set clearance of outer parking brakeshoe (9) and brakedrum (8) to .015 in. (.381 mm) (A). Tighten nut (10).
3. Loosen jamnut (4) on threaded end of brake cable (3). Turn adjusting nut (5) until .015-in. (.381-mm) clearance (B) is obtained between the inner brakeshoe (7) and brakedrum (8). Tighten jamnut (4) against adjusting nut (5).
4. Hold eccentric pin (6) and loosen nut on opposite side.
5. Turn eccentric pin (6) until .015-in. (.381-mm) clearance (C) is obtained at both ends of inner brakeshoe (7) and brakedrum (8). Tighten nut on opposite side of eccentric pin (6) 38-42 lb-ft (52-57 N•m).
6. Apply and release parking brake lever (2) twice. Stop in release position. Recheck clearances (steps 2,3, and 5).
7. Repeat steps 3 through 6 as necessary to obtain .015-in. (.381-mm) clearance.

8-5. PARKING BRAKESHOE ADJUSTMENT (Contd)

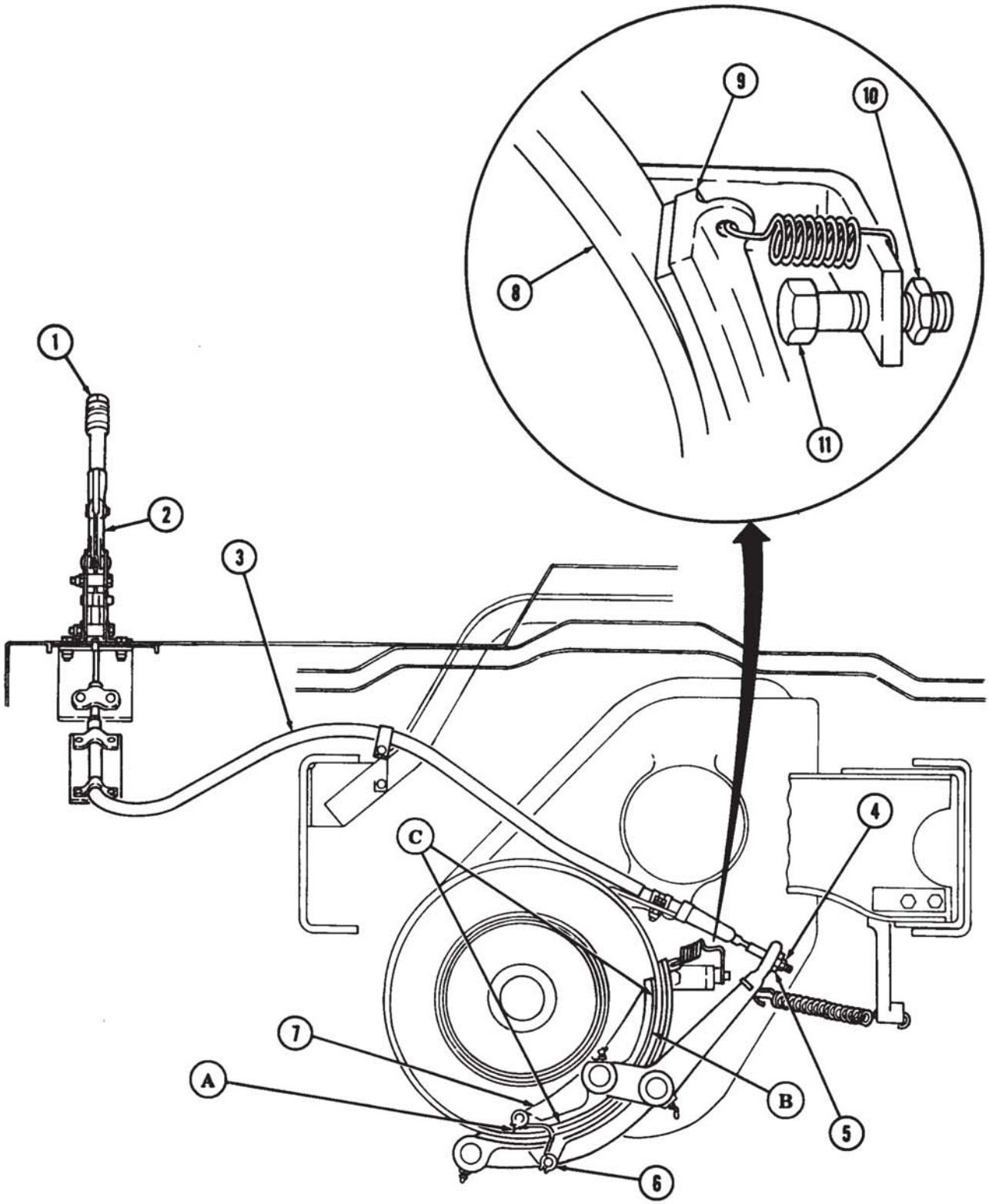

FOLLOW-ON TASK: Install transmission to forward-rear axle propeller shaft (para. 7-2).

8-6. PARKING BRAKEDRUM REPLACEMENT

THIS TASK COVERS:

a. Removal **b. Installation**

INITIAL SETUP

APPLICABLE MODELS
All

MATERIALS/PARTS
Six stud bolts
Cotter pin

REFERENCES (TM)
TM 9-2320-260-10
TM 9-2320-260-20P

EQUIPMENT CONDITION
- Wheels chocked (TM 9-2320-260-10).
- Parking brake released (TM 9-2320-260-10).
- Parking brakeshoes removed (para. 8-4).

a. Removal

1. Remove cotter pin (l), nut (9), and washer (8) from flange (2) and transfer output shaft (5). Discard cotter pin (l).
2. Remove flange (2), brakedrum (7) with shield (3), and deflector (4) from transfer output shaft (5).
3. Remove shield (3) and six stud bolts (6) from brakedrum (7). Discard stud bolts (6).

b. Installation

1. Install shield (3) on brakedrum (7) with six new stud bolts (6).
2. Install deflector (4), brakedrum (7) with shield (3), and flange (2) on transfer output shaft (5).
3. Install washer (8) and nut (9) on transfer output shaft (5) and flange (2). Tighten nut (9) 300-600 lb-ft (407-814 N•m).
4. Install new cotter pin (1) through nut (9) and transfer output shaft (5).

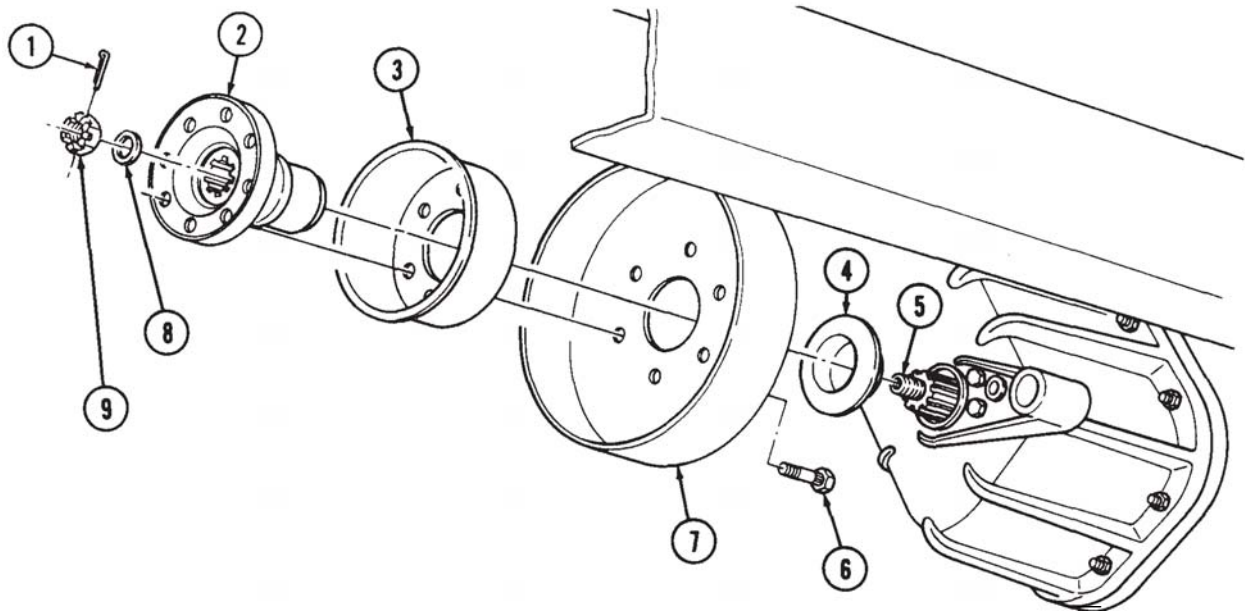

FOLLOW-ON TASK Install parking brakeshoes (para. 8-4).

Section II. SERVICE BRAKES AND HYDRAULIC SYSTEM MAINTENANCE

8-7. SERVICE BRAKES AND HYDRAULIC SYSTEM MAINTENANCE INDEX

PARA. NO.	TITLE	PAGE NO.
8-8.	Service Brakeshoe Maintenance	8-13
8-9.	Service Brake Adjustment	8-16
8-10.	Hydraulic Wheel Cylinder Replacement	8-18
8-11.	Master Cylinder Replacement	8-20
8-12.	Master Cylinder Mounting Bracket Replacement	8-22
8-13.	Service Brake Flexible Hose Replacement	8-24
8-14.	Air-Hydraulic Cylinder Replacement	8-26
8-15.	Bleeding Service Brake System	8-30
8-16.	Brake Pedal Replacement	8-36
8-17.	Brake Pedal Adjustment	8-37

8-8. SERVICE BRAKESHOE MAINTENANCE

THIS TASK COVERS:

a. Removal
b. Cleaning and Inspection
c. Installation

INITIAL SETUP

APPLICABLE MODELS

All

MATERIAIS/PARTS

Four lockwashers
Two locknuts
Two cotter pins
Two retaining clips
GAA grease (Appendix C, Item 16)
Rags (Appendix C, Item 22)
Drycleaning solvent (Appendix C, Item 29)

REFERENCES (TM)

TM 9-2320-260-10
TM 9-2320-260-20P

EQUIPMENT CONDITION

- Parking brake set (TM 9-2320-260-10).
- Front or rear hub and drum removed (para. 9-4 or 9-5).

GENERAL SAFETY INSTRUCTIONS

- Eye protection is required when using wire brush for cleaning.
- Keep fire extinguisher nearby when using drycleaning solvent.
- Do not use dry brush or compressed air to clean brakeshoes.

8-8. SERVICE BRAKESHOE MAINTENANCE (Contd)

a. Removal

1. Remove return spring (14) from pins (20).
2. Remove two cotter pins (19) from pins (20). Discard cotter pins (19).
3. Remove two locknuts (15), anti-rattle springs (18), and four mounting washers (17) from mounting pins (23). Discard locknuts (15).
4. Remove two retaining clips (16) and anchor link (13) from anchor pins (12). Discard retaining clips (16).
5. Pull brakeshoes (10) from wheel cylinder (24) and remove brakeshoes (10) from backing plate (7).
6. Remove two mounting washers (21) and anti-rattle springs (22) from mounting pins (23).
7. Remove two bushings (11) and pins (20) from brakeshoes (10).

b. Cleaning and Inspection

WARNING

- Eye protection is required when using wire brush for cleaning. Failure to do this may result in injury to personnel.
- Drycleaning solvent is flammable and will not be used near open flame. Use only in well-ventilated places. Failure to do so may result in injury to personnel.
- Do not use a dry brush or compressed air to clean brakeshoes. There may be asbestos dust on brakeshoes which can be dangerous to your health if you breathe it. (Brakeshoes must be wet; use soft bristle brush.)

1. Wash all parts, except brakeshoes (10), in drycleaning solvent and wipe dry with clean rag. Clean outer brakeshoe side of backing plate (7) with rag saturated in drycleaning solvent and wipe dry.
2. Measure top, middle, and bottom thickness of brakeshoes (10). Replace if minimum thickness is 21/64 in. (8.33 mm) or less.
3. Inspect backing plate (7) for cracks, breaks, and elongated holes. Replace front backing plate (7) if broken, cracked, or holes are elongated.
4. Inspect anchor pins (12) for cracks, looseness, and chipped and broken retaining clip slots. Replace anchor pins (12) if cracked, loose in backing plate (7), or retaining clip slots are damaged.
5. Inspect wheel cylinder (24) for tears, cracks, bends, and leaks. Replace if torn, cracked, bent, or leaking.
6. Inspect cams (1), springs (2), and adjusting pins (4) for cracks, bends, and breaks. Replace if cracked, bent, or broken.
7. Inspect return spring (14) and anti-rattle springs (18) and (22) for breaks, bends, and distorted coils. Replace if broken, bent, or coils are distorted.
8. Visually inspect mounting pins (23), backing plate (7), adjusting pins (4), and springs (2). Perform steps 9 through 14 if cracked, bent, or broken.
9. Remove two nuts (5), lockwashers (6), and mounting pins (23) from backing plate (7). Discard lockwashers (6).
10. Remove two nuts (8), lockwashers (9), and anchor pins (12) from backing plate (7). Discard lockwashers (9).
11. Remove two adjusting pins (4), washers (3), adjusting cams (1), and springs (2) from backing plate (7).

8-8. SERVICE BRAKESHOE MAINTENANCE (Contd)

12. Install two springs (2) and adjusting cams (1) on backing plate (7) with two washers (3) and adjusting pins (4).
13. Install two anchor pins (12) on backing plate (7) with two new lockwashers (9) and nuts (8).
14. Install two mounting pins (23) on backing plate (7) with two new lockwashers (6) and nuts (5).

c. Installation

NOTE

- Brakeshoes must be installed as a matched set.
- Final tightening of cam nuts and anchor pin nuts is done in brakeshoe adjustment.
- Apply a light film of grease on backing plate, anchor pins, and mounting pins.

1. Mark ends of new or old anchor pins (12) with center punch indicating highest cam lobe position.
2. Position two anti-rattle springs (22) and mounting washers (21) on mounting pins (23).
3. Install two bushings (11) and pins (20) in brakeshoes (10).
4. Position brakeshoes (10) on backing plate (7) and wheel cylinder (24).
5. Install anchor link (13) on anchor pins (12) with two new retaining clips (16).
6. Install four mounting washers (17), two anti-rattle springs (18), and new locknuts (15) on mounting pins (23).
7. Install two new cotter pins (19) in pins (20).
8. Install return spring (14) on pins (20).

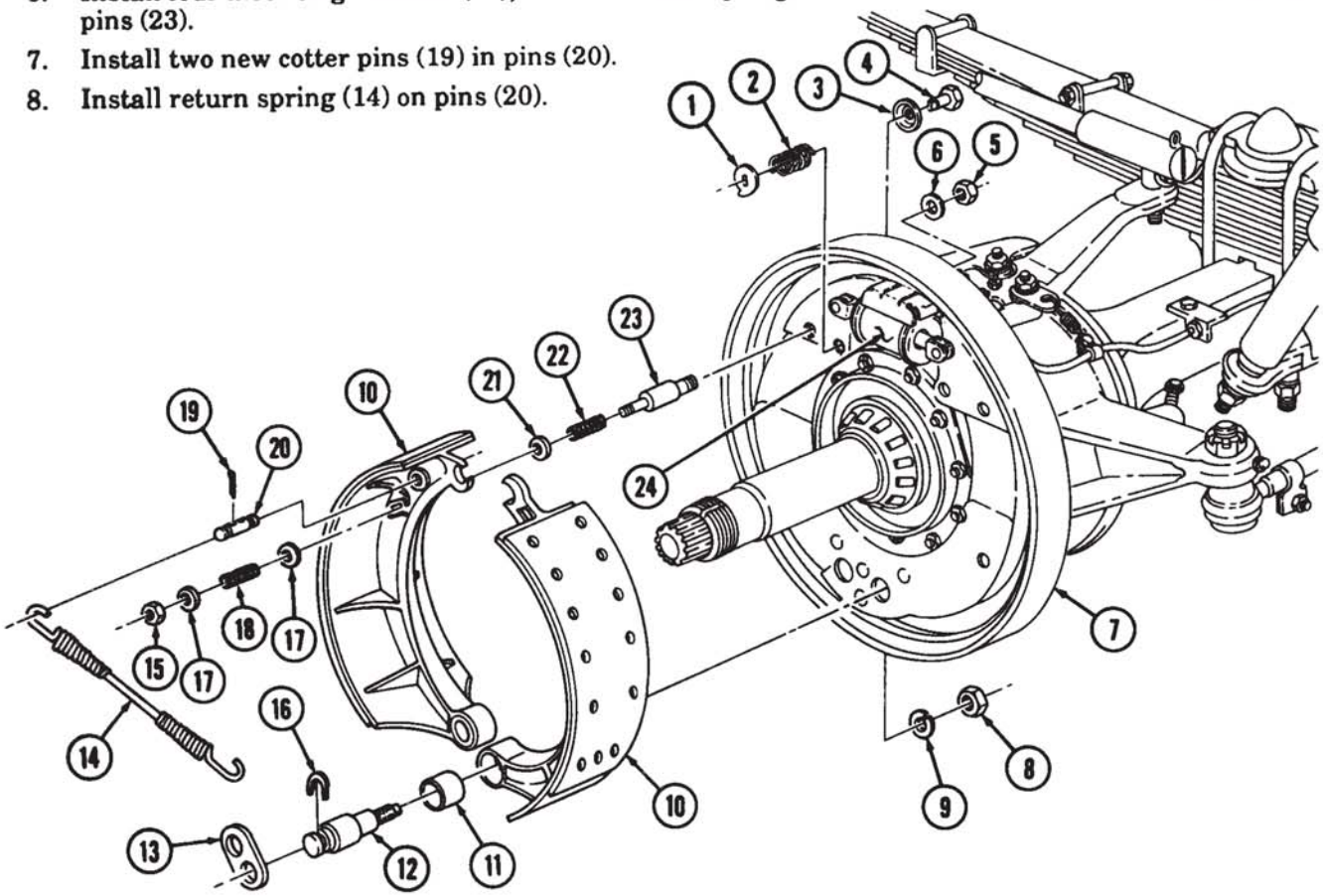

FOLLOW-ON TASKS: • Install front or rear hub and drum (para. 9-4 or 9-5).
• Adjust service brakes (para. 8-9).

8-9. SERVICE BRAKE ADJUSTMENT

THIS TASK COVERS:

Service Brake Adjustment

INITIAL SETUP

APPLICA8LE MODELS
All

MATERIALS/PARTS
Lockwasher

REFERENCES (TM)
TM 9-2320-260-10
TM 9-2320-260-20P

EQUIPMENT CONDITION
- Parking brake set (TM 9-2320-260-10).
- Front or rear wheels removed (para. 9-3).
- Wheel bearing adjusted (para. 9-6).

NOTE

- The front and rear brakes are adjusted the same way. This procedure covers the front brakes only.
- Allow brakes to cool before adjusting.

Service Brake Adjustment

1. Remove nut (1), lockwasher (2), and inspection slot cover (3) from brakedrum (4). Discard lockwasher (2).
2. Turn brakedrum (4) to position inspection slot (5) at 8 o'clock location.
3. Loosen jamnut (10) on anchor pin (11) one full turn.
4. Turn anchor pin (11) clockwise or counterclockwise until gap between brakeshoe lining (7) and inner brakedrum surface (6) measures .010 in. (.25 mm).
5. Turn brakedrum (4) to position inspection slot (5) at 11 o'clock location.
6. Turn cam stud (9) clockwise until gap between brakeshoe lining (7) and inner brakedrum surface (6) measures .020 in. (.50 mm).
7. Turn brakedrum (4) to position inspection slot (5) at 5 o'clock location.
8. Loosen jamnut (12) on anchor pin (13) one full turn.
9. Turn anchor pin (13) clockwise or counterclockwise until gap between brakeshoe lining (7) and inner brakedrum surface (6) measure .010 in. (.25 mm).
10. Turn brakedrum (4) to position inspection slot (5) at 1 o'clock location.
11. Turn cam stud (8) counterclockwise until gap between brakeshoe lining (7) and inner brakedrum surface (6) measures .20 in. (.50 mm).
12. Install inspection slot cover (3) on brakedrum (4) with new lockwasher (2) and nut (1).
13. Turn brakedrum (4) by hand and turn cam stud (8) counterclockwise until brakedrum (4) drags. Loosen cam stud (8) until brakedrum (4) slightly drags.
14. Turn brakedrum (4) by hand and turn cam stud (9) clockwise until brakedrum (4) drags. Loosen cam stud (9) until brakedrum (4) slightly drags.
15. Repeat steps 1 through 14 to perform service brake adjustment of other wheel on axle.

8-9. SERVICE BRAKE ADJUSTMENT (Contd)

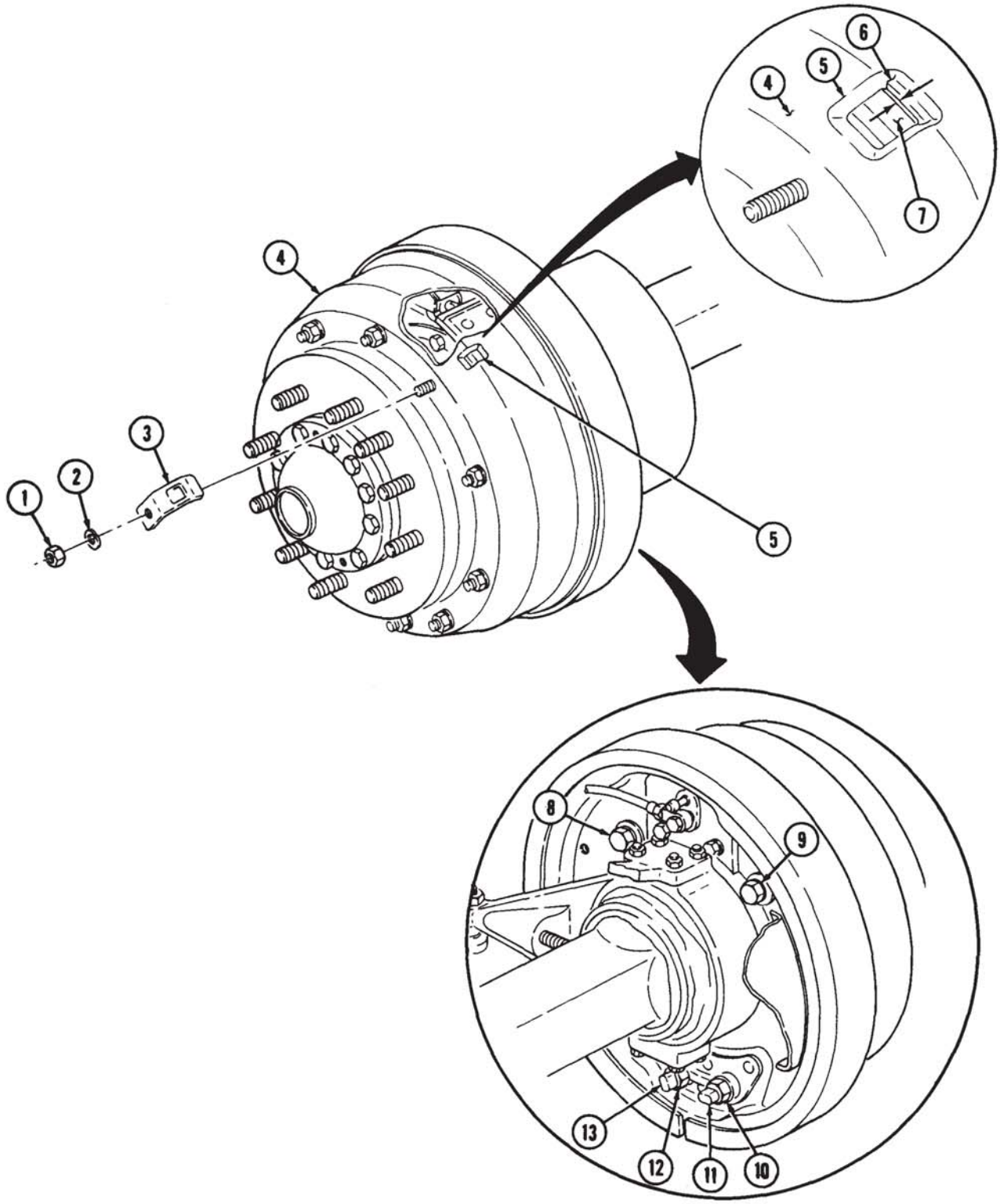

FOLLOW-ON TASK: Install front or rear wheels (para. 9-3).

8-10. HYDRAULIC WHEEL CYLINDER REPLACEMENT

THIS TASK COVERS:

a. Removal b. Installation

INITIAL SETUP

APPUCABLE MODELS
All

MATERIALS/PARTS
Two lockwashers
Two seal washers
Cap and plug set (Appendix C, Item 9)

REFERENCES (TM)
TM 9-2320-260-10
TM 9-2320-260-20P

EQUIPMENT CONDITION
- Parking brake released (TM 9-2320-260-10).
- Wheels removed (para. 9-3).
- Front or rear hub and drum removed (para. 9-4 or 9-5).

a. Removal

CAUTION

When removing hydraulic wheel cylinders, plug all open ports and hydraulic lines. Failure to do so may cause damage to hydraulic system.

NOTE

- If hydraulic fluid comes in contact with brakeshoe linings, brakeshoes must be replaced.
- Have drainage container ready to catch brake fluid.

1. Remove screw (2), hose connector (3), and two seal washers (1) from wheel cylinder (10). Discard seal washers (1).
2. Remove return spring (9) from brakeshoes (7).
3. Remove two screws (4) and lockwashers (5) and pull brakeshoes (7) from two yoke links (8). Discard lockwashers (5).
4. Remove wheel cylinder (10) and cover (12) from backing plate (6).
5. Remove two yoke links (8) from wheel cylinder (10).
6. Remove bleeder screw (11) from wheel cylinder (10), if needed.

b. Installation

1. Install two yoke links (8) in wheel cylinder (10).
2. Position cover (12) and wheel cylinder (10) on backing plate (6) and install with two new lockwashers (5) and screws (4).
3. Install brakeshoes (7) on yoke links (8).
4. Install return spring (9) on brakeshoes (7).
5. Install hose connector (3) on wheel cylinder (10) with two new seal washers (1) and screw (2).

8-10. HYDRAULIC WHEEL CYLINDER REPLACEMENT (Contd)

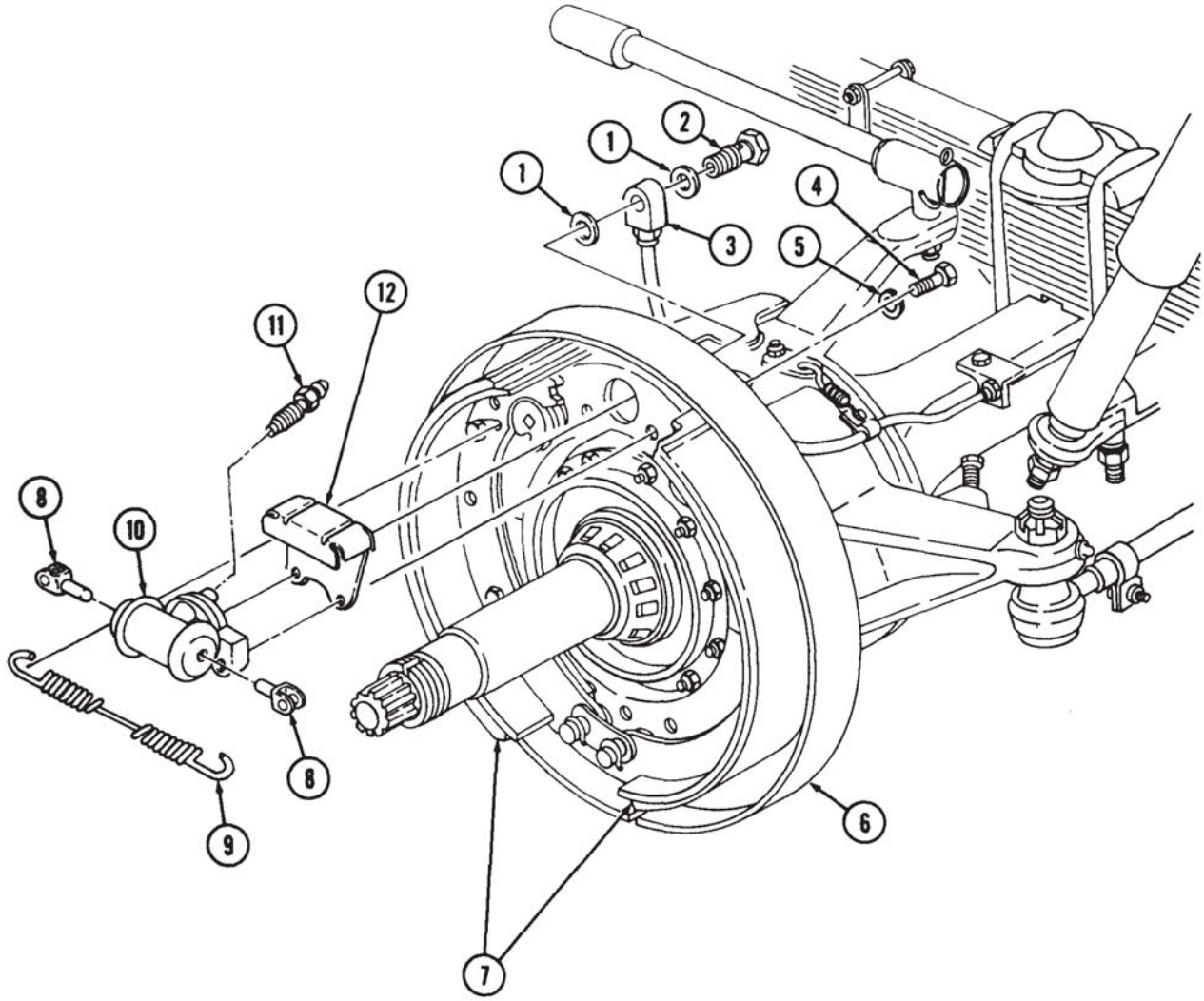

FOLLOW-ON TASKS: • Install front or rear hub and drum (para. 9-4 or 9-5).
• Install wheels (para. 9-3).
• Bleed brake system (para. 8-15).

8-11. MASTER CYLINDER REPLACEMENT

THIS TASK COVERS:

a. Removal

b. Installation

INITIAL SETUP

APPLICABLE MODELS

All

MATERIALS/PARTS

Eight locknuts
Screw-assembled lockwasher
Cotter pin
Antiseize tape (Appendix C, Item 30)

REFERENCES (TM)

TM 9-2320-260-10
TM 9-2320-260-20P

EQUIPMENT CONDITION

- Parking brake set (TM 9-2320-260-10).
- Transfer to forward-rear axle propeller shaft removed (para. 7-2).

a. Removal

1. Remove screw-assembled lockwasher (1) and open master cylinder hatch (2). Discard screw-assembled lockwasher (1).
2. Remove four locknuts (15), screws (18), washers (17), and shield (14) from air-hydraulic cylinder (16). Discard locknuts (15).
3. Remove return spring (5) from brake lever (4) and bracket (6).
4. Remove cotter pin (7), straight pin (9), and pushrod clevis (8) from brake lever (4). Discard cotter pin (7).
5. Loosen jamnut (10) and remove pushrod clevis (8) from pushrod (12).
6. Disconnect hydraulic line (19) horn master cylinder (20) and air-hydraulic cylinder (16).
7. Remove four locknuts (13), screws (11), and master cylinder (20) from bracket (3). Discard locknuts (13).
8. Visually inspect master cylinder dust boot (21). Replace if darn aged.

b. Installation

1. Install pushrod clevis (8) on pushrod (12).
2. Install master cylinder (20) on bracket (3) with four screws (11) and new locknuts (13).
3. Apply antiseize tape to male threads of hydraulic line (19).
4. Connect hydraulic line (19) on master cylinder (20) and air-hydraulic cylinder (16).
5. Install pushrod clevis (8) on brake lever (4) with straight pin (9) and new cotter pin (7).
6. Install return spring (5) on brake lever (4) and bracket (6).
7. Install shield (14) on air-hydraulic cylinder (16) with four washers (17), screws (18), and new locknuts (15).

8-11. MASTER CYLINDER REPLACEMENT (Contd)

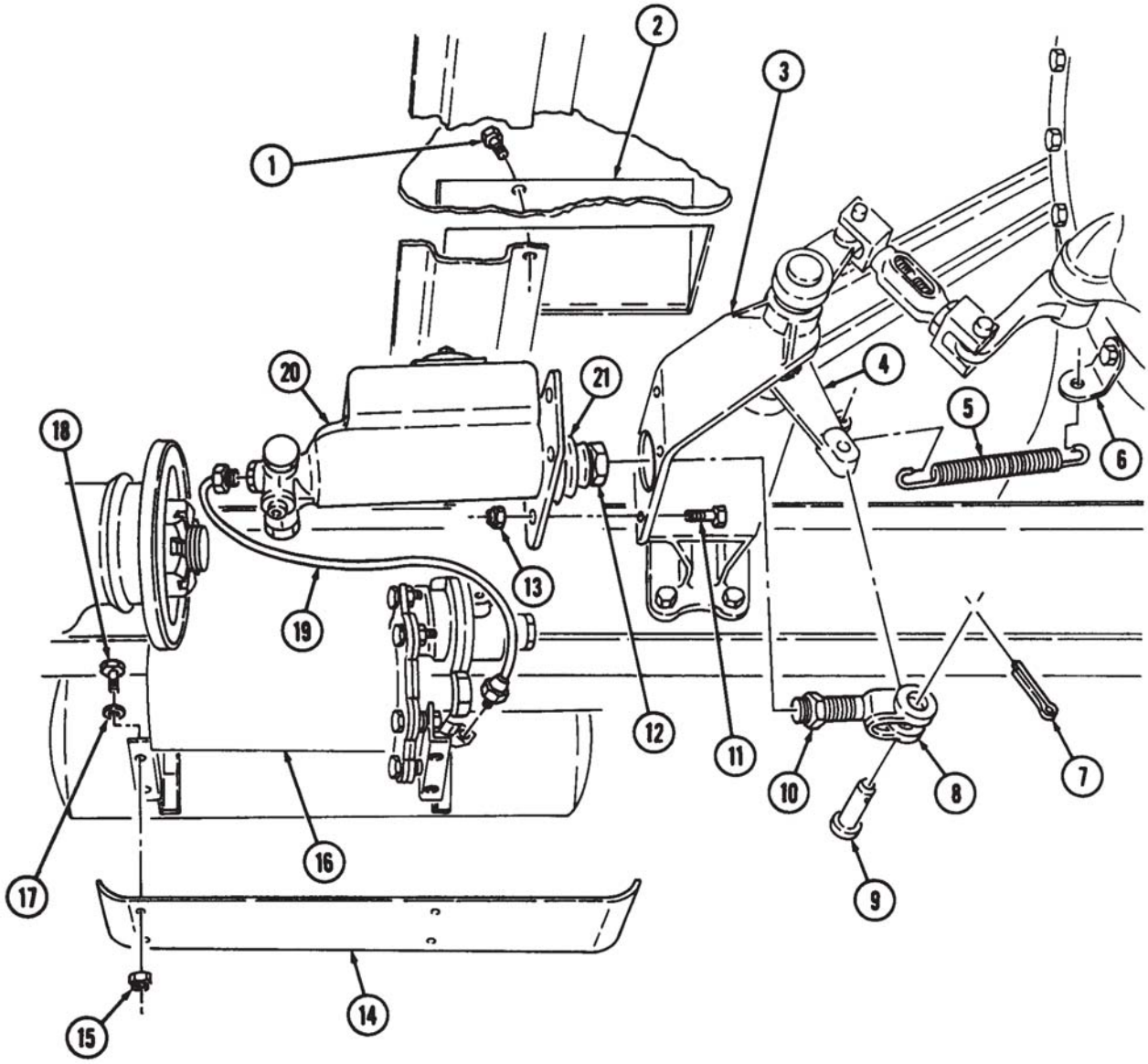

FOLLOW-ON TASKS: • Perform brake pedal adjustment procedures (para. 8-17).
• Bleed brake system (para. 8-15).
• Install transfer to forward-rear axle propeller shaft (para. 7-2).

8-12. MASTER CYLINDER MOUNTING BRACKET REPLACEMENT

THIS TASK COVERS:

a. Removal **b. Installation**

INITIAL SETUP

APPLICABLE MODELS
All

MATERIALS/PARTS
Cotter pin
Seven locknuts
Woodruff key

REFERENCES (TM)
TM 9-2320-260-10
TM 9-2320-260-20P

EQUIPMENT CONDITION
- Parking brake set (TM 9-2320-260-10).
- Wheels chocked (TM 9-2320-260-10).
- Master cylinder removed (para. 8-11).

a. Removal

1. Remove cotter pin (8) and pin (7) from clevis rod (12) and lever (23). Discard cotter pin (8).
2. Loosen nut (22) and screw (24) on lever (23).
3. Remove lever (23) and woodruff key (21) from shaft (11). Discard woodruff key (21).
4. Remove locknut (4), screw (1), bumper (3), and brake pedal (6) from bellcrank (2). Discard locknut (4).
5. Remove spring (5) from bellcrank (2) and bracket (9).
6. Remove lever (13) and shaft (11) from mounting bracket (19).
7. Remove locknut (20) and screw (27) from support lever (25) and master cylinder mounting bracket (19). Discard locknut (20).
8. Remove locknut (17) and screw (26) from support lever (25) and left-hand frame rail (16). Discard locknut (17).
9. Remove four locknuts (18) and screws (15) from master cylinder mounting bracket (19) and left-hand frame rail (16). Discard locknuts (18).
10. Remove two screws (10). locknuts (14). and master cylinder mounting bracket (19) from left-hand frame rail (16) and bellcrank (2). Discard locknuts (14).

1. Install master cylinder mounting bracket (19) on left-hand frame rail (16) with four screws (15) and new locknuts (18).
2. Install master cylinder mounting bracket (19) on left-hand frame rail (16) with two screws (10) and new locknuts (14).
3. Install support lever (25) on left-hand frame rail (16) with screw (26) and new locknut (17).
4. Install support lever (25) on master cylinder mounting bracket (19) with screw (27) and new locknut (20).
5. Position bellcrank (2) in master cylinder mounting bracket (19).
6. Insert shaft (11) and lever (13) through master cylinder mounting bracket (19) and bellcrank (2).
7. Install woodruff key (21) and lever (23) on shaft (11).
8. Install spring (5) on bellcrank (2) and bracket (9).
9. Install brake pedal (6) and bumper (3) on bellcrank (2) with screw (1) and new locknut (4).
10. Install clevis rod (12) on lever (23) with pin (7) and new cotter pin (8).
11. Tighten screw (24) and nut (22) on lever (23).

8-12. MASTER CYLINDER MOUNTING BRACKET REPLACEMENT (Contd)

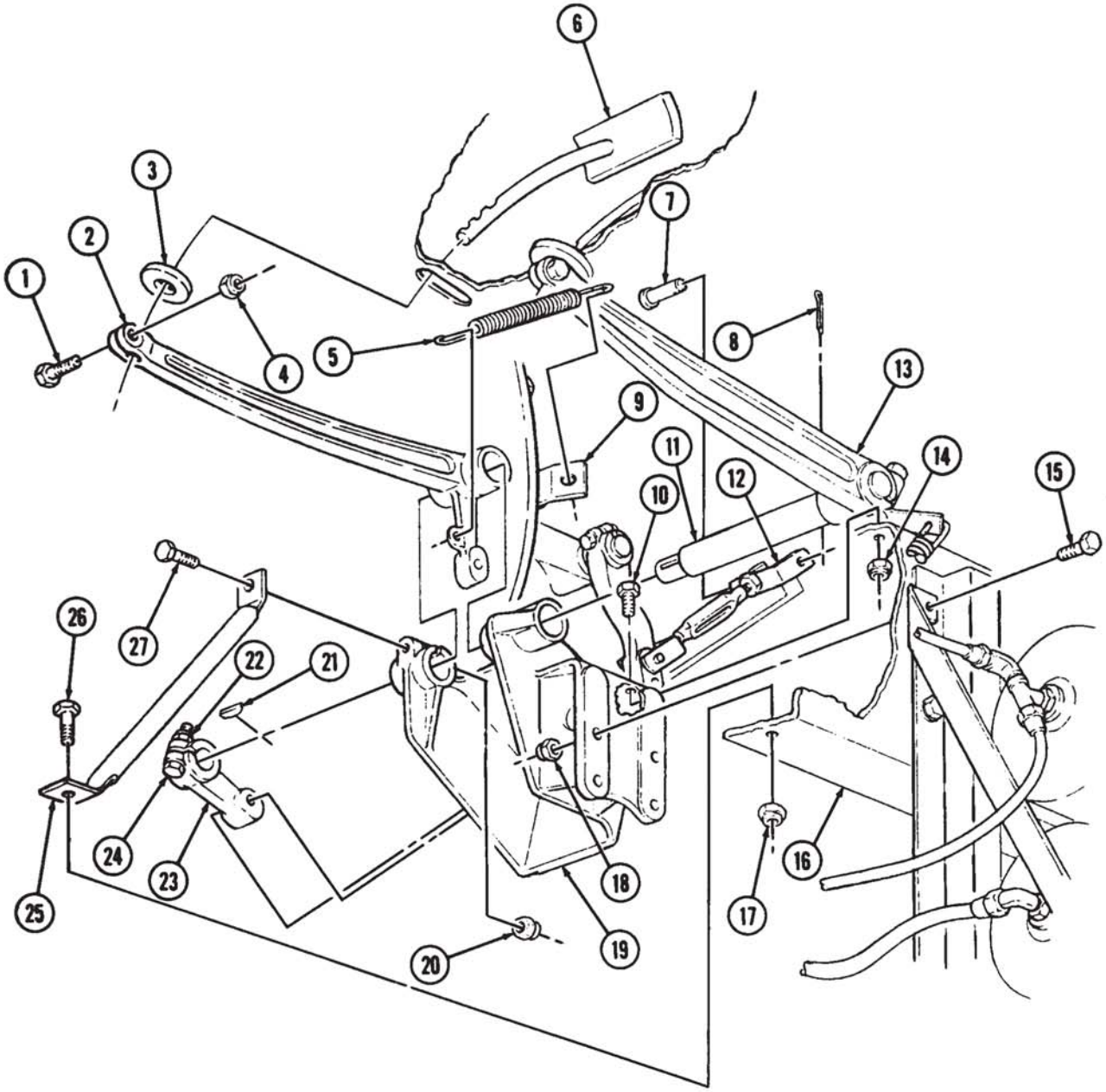

FOLLOW-ON TASK: Install master cylinder (para. 8-11).

8-13. SERVICE BRAKE FLEXIBLE HOSE REPLACEMENT

THIS TASK COVERS:

a. Removal **b. Installation**

INITIAL SETUP

APPLICABLE MODELS
All

MATERIALS/PARTS
Two seal washers
Locknut
Cap and plug set (Appendix C, Item 9)
Antiseize tape (Appendix C, Item 30)

REFERENCES (TM)
TM 9-2320-260-10
TM 9-2320-260-20P

EQUIPMENT CONDITION
Parking brake set (TM 9-2320-260-10).

a. Removal

CAUTION

When removing hydraulic flexible hose from wheel cylinder plug, open line and port. Failure to do so may damage hydraulic system.

1. Remove locknut (12), screw (6), and spring (7) from clamp (8) and bracket (5). Discard locknut (12).

NOTE

Have drainage container ready to catch brake fluid.

2. Remove brake line screw (4), two seal washers (2), and fitting (3) from wheel cylinder (13). Discard seal washers (2).
3. Remove fitting (3) from hose (1).

NOTE

Visually inspect brackets. Replace if damaged.

4. Remove brake line (9), nut (10), and hose (1) from bracket (11).

b. Installation

1. Apply antiseize tape to male threads of hose (1) and brake line (9).
2. Insert hose (1) through bracket (11) and install nut (10) and brake line (9) on bracket (11).
3. Install fitting (3) on hose (1).
4. Install two new seal washers (2), fitting (3), and brake line screw (4) on wheel cylinder (13),
5. Install clamp (8) and spring (7) on hose (1) with screw (6) and new locknut (12).
6. Install spring (7) on bracket (5).

8-13. SERVICE BRAKE FLEXIBLE HOSE REPLACEMENT (Contd)

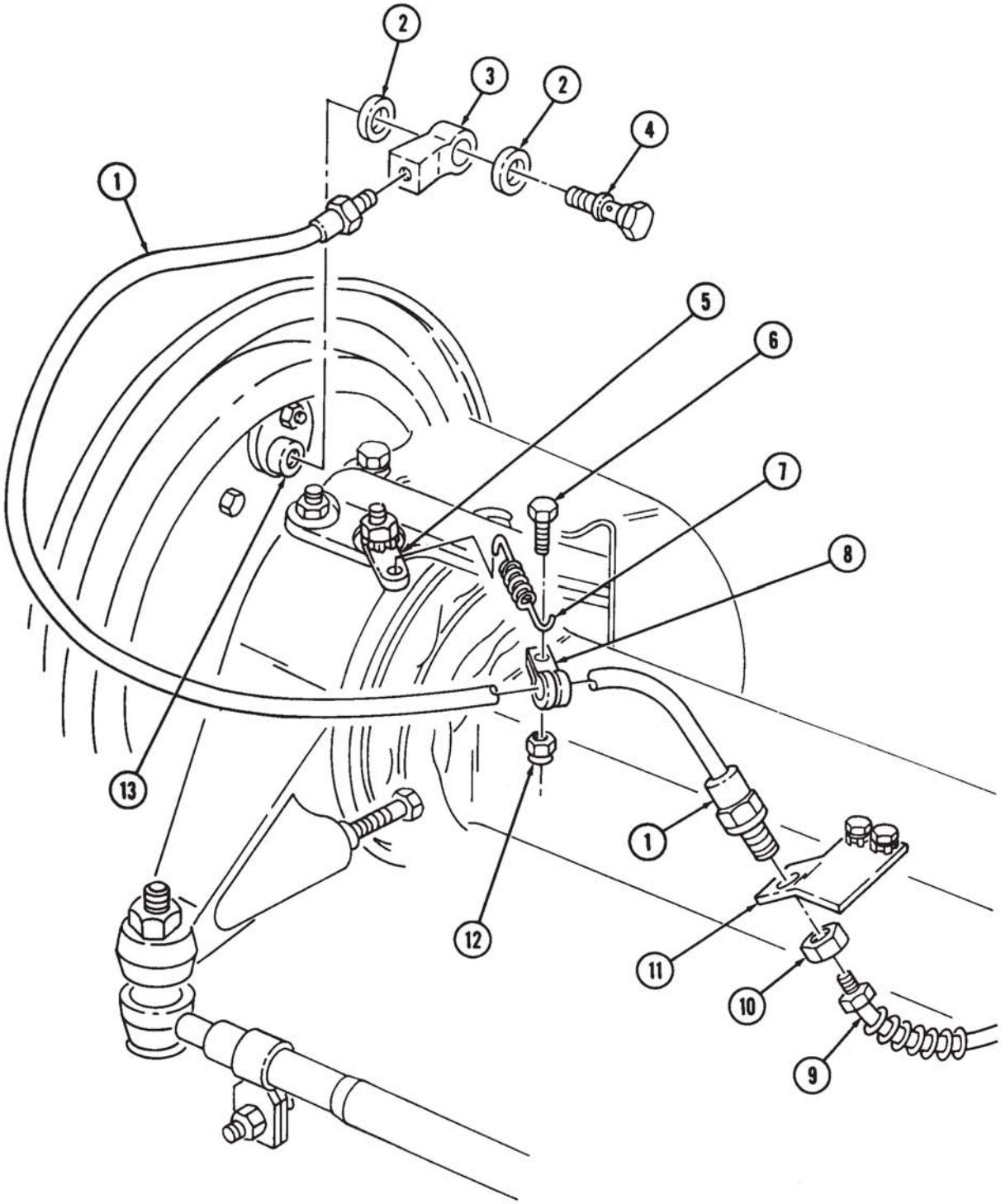

FOLLOW-ON TASK: Bleed service brake system (para. 8-15).

8-14. AIR-HYDRAULIC CYLINDER REPLACEMENT

THIS TASK COVERS:

a. Removal **b. Installation**

INITIAL SETUP

APPLICABLE MODELS
All

MATERIALS/PARTS
Twelve locknuts
Two seals
Antiseize tape (Appendix C, Item 30)

REFERENCES (TM)
TM 9-2320-260-10
TM 9-2320-260-20P

EQUIPMENT CONDITION
- Parking brake set (TM 9-2320-260-10).
- Air reservoirs drained (TM 9-2320-260-10).

GENERAL SAFETY INSTRUCTIONS
Do not disconnect air lines before draining air reservoirs.

a. Removal

1. Remove four locknuts (17), screws (20), washers (19), and shield (16) from two brackets (18). Discard locknuts (17).

WARNING

Do not disconnect air lines before draining air reservoir. Small parts under pressure may shoot out with high velocity, causing injury to personnel.

2. Disconnect leads (2) from stoplight pressure switch (3).

NOTE

Tag all air lines for installation.

3. Disconnect four air lines (4), (5), (9), and (22) from elbows (7), (6), (8), and (21).
4. Disconnect air line (1) from air-hydraulic cylinder (15).
5. Disconnect air line (10) from air-hydraulic cylinder (15).
6. Remove four locknuts (11), screws (14), washers (13), and air-hydraulic cylinder (15) from brackets (12). Discard locknuts (11).

8-14. AIR-HYDRAULIC CYLINDER REPLACEMENT (Contd)

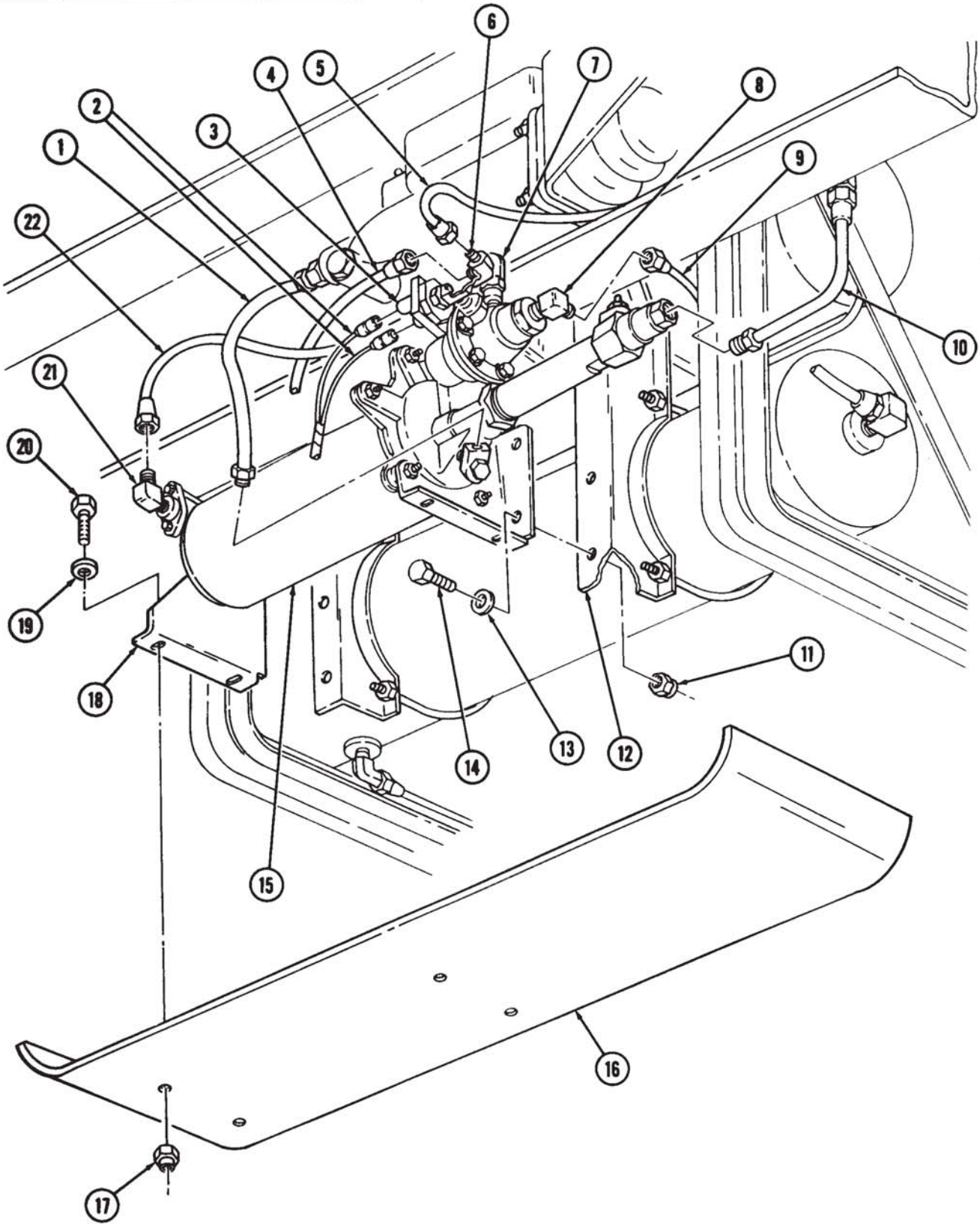

8-14. AIR-HYDRAULIC CYLINDER REPLACEMENT (Contd)

7. Remove locknut (16), washer (17), and bracket (18) from air-hydraulic cylinder (15). Discard locknut (16).
8. Remove three locknuts (13), washers (14), and bracket (10) from air-hydraulic cylinder (15). Discard locknuts (13).
9. Remove elbow (19) from check valve (20).
10. Remove stoplight switch (1), elbow (3), and tee (2) from air-hydraulic cylinder (15).
11. Remove elbow (4) and adapter (5) from air-hydraulic cylinder (15).
12. Remove elbow (6), adapter (7), and washer (8) from air-hydraulic cylinder (15).
13. Remove screw (11), fitting (12), and two seals (9) from air-hydraulic cylinder (15). Discard seals (9).

b. Installation

NOTE

Male threads must be wrapped with antiseize tape before installation.

1. Apply antiseize tape to male threads of elbows (3), (4), (6), and (19), stoplight switch (1), adapters (5) and (7), and tee (2).
2. Install two new seals (9), fitting (12), and screw (11) on air-hydraulic cylinder (15).
3. Install washer (8), adapter (7), and elbow (6) on air-hydraulic cylinder (15).
4. Install adapter (5) and elbow (4) on air-hydraulic cylinder (15).
5. Install tee (2), elbow (3), and stoplight pressure switch (1) on air-hydraulic cylinder (15).
6. Install elbow (19) on check valve (20).
7. Install bracket (10) on air-hydraulic cylinder (15) with three washers (14) and new locknuts (13).
8. Install bracket (18) on air-hydraulic cylinder (15) with two washers (17) and new locknuts (16).
9. Install air-hydraulic cylinder (15) on brackets (28) with four washers (29), screws (30), and new locknuts (27).
10. Connect air line (26) to air-hydraulic cylinder (15).
11. Connect air line (21) to air-hydraulic cylinder (15).
12. Connect four air lines (23), (24), (25), and (35) to elbows (4), (3), (6), and (19).
13. Connect leads (22) to stoplight pressure switch (1).
14. Install shield (31) on brackets (18) with four washers (33), screws (34), and new locknuts (32).

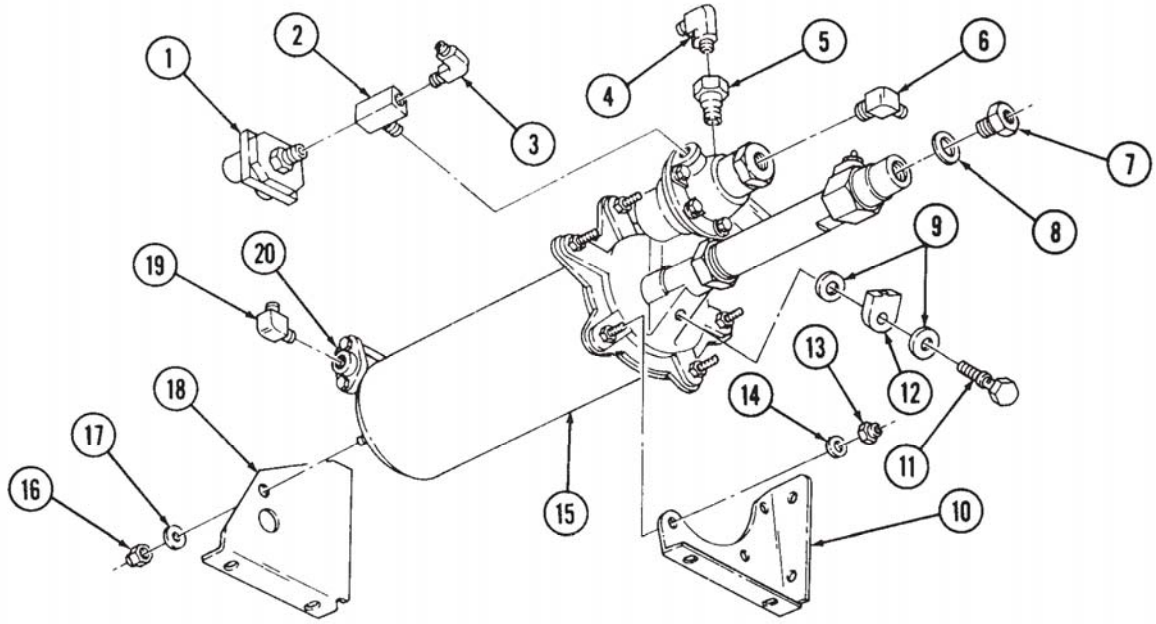

8-14. AIR-HYDRAULIC CYLINDER REPLACEMENT (Contd)

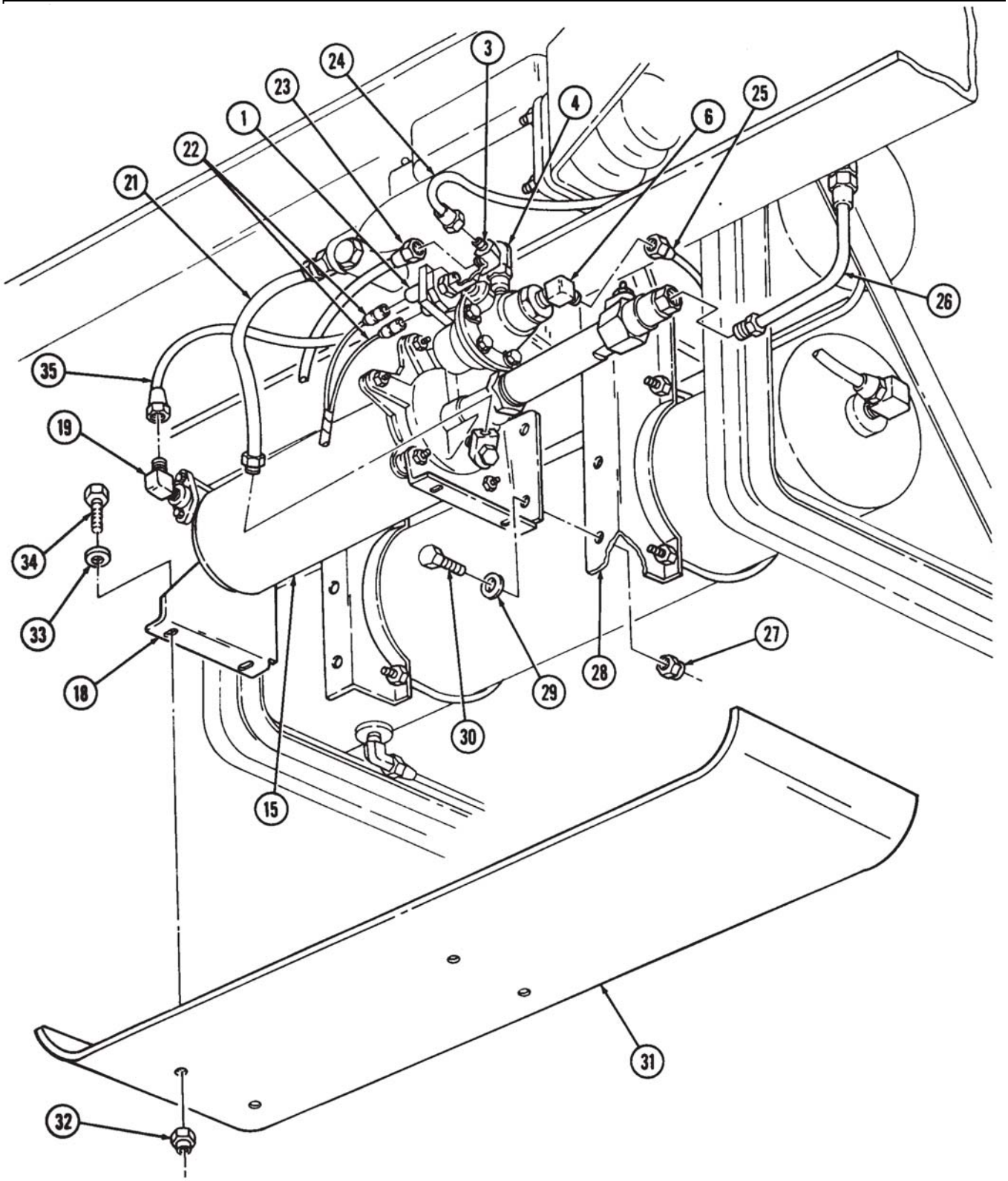

FOLLOW-ON TASK Bleed service brake system (para. 8-15).

8-15. BLEEDING SERVICE BRAKE SYSTEM

THIS TASK COVERS:

a. Pressure Bleeding Method **b. Manual Method**

INITIAL SETUP

APPLICABLE MODELS
All

MATERIALS/PARTS
Hose
Screw-assembled lockwasher
Brake fluid (Appendix C, Item 8)
Rags (Appendix C, Item 22)
Four locknuts

PERSONNEL REQUIRED
Two

REFERENCES (TM)
TM 9-2320-260-10
TM 9-2320-260-20P

EQUIPMENT CONDITION
Parking brake set (TM 9-2320-260-10).

a. Pressure Bleeding Method

1. Remove screw-assembled lockwasher (1) from crossmember (11) and open master cylinder access panel (2). Discard screw-assembled lockwasher (1).
2. Clean surface of master cylinder filler plug (3) with clean rag.
3. Remove filler plug (3) and check that master cylinder (4) is at proper fluid level.
4. Install bleeder adapter (7) on master cylinder (4),

NOTE

Prior to installation, check that bleeder tank is filled with recommended brake fluid, pressurized at 20-30 psi (138-178 kpa), and valve is off. Follow manufacturer's instructions for purging and preparation.

5. Connect bleeder tank hose (6) on bleeder adapter (7) and open tank valve (5).
6. Check hydraulic system for leaks. Correct as necessary.
7. Clean bleeder screw (8) on master cylinder (4) with clean rag.
8. Place hose (10) on bleeder screw (8) and place opposite end of hose (10) in a clear container (9) half full of brake fluid. Ensure hose (10) is below brake fluid level in container (9).
9. Open bleeder screw (8) and allow brake fluid to flow from master cylinder (4) until no air bubbles are observed in container (9).
10. Close bleeder screw (8). Tighten bleeder screw (8) 10-20 lb-ft (14-27 N•m).
11. Remove hose (10) from bleeder screw (8) and properly dispose of fluid in container (9).

8-15. BLEEDING SERVICE BRAKE SYSTEM (Contd)

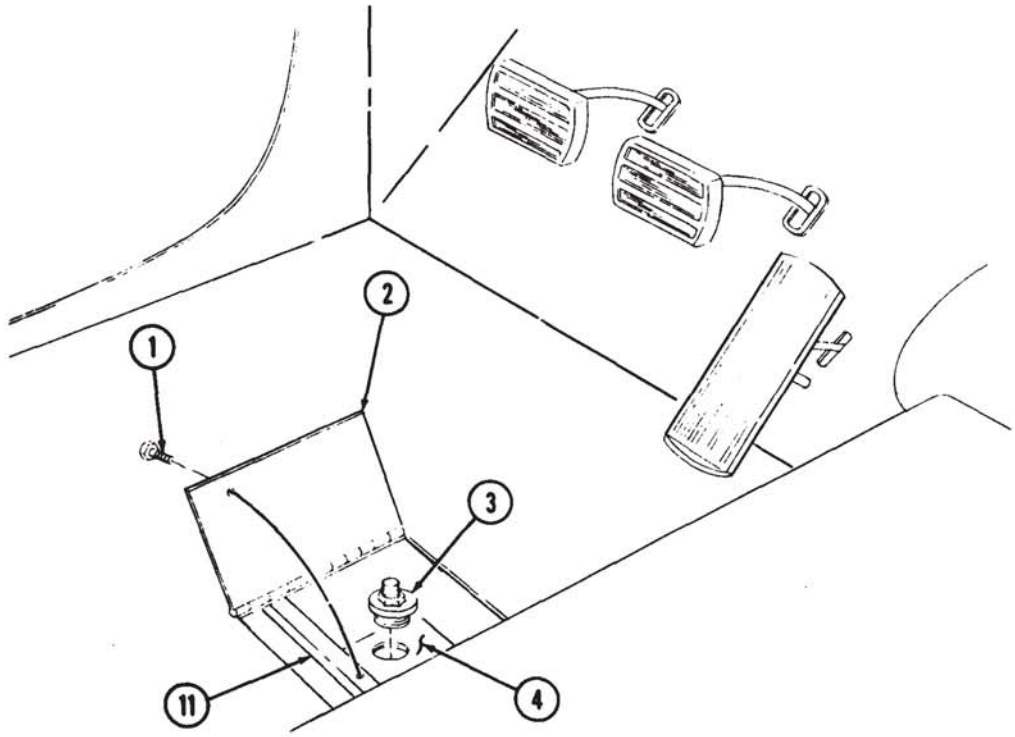

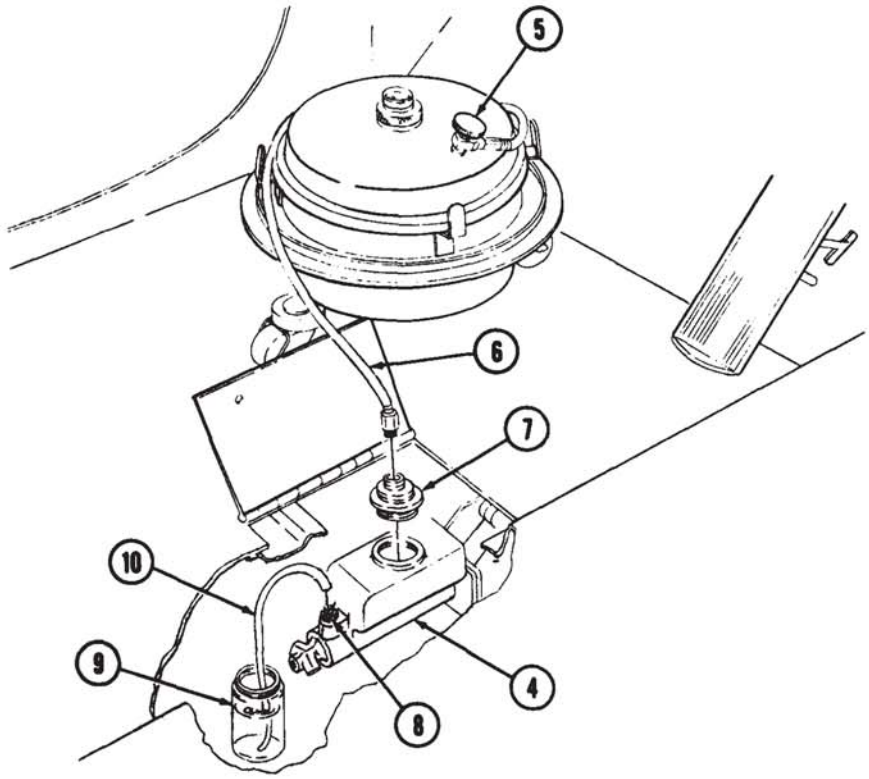

8-15. BLEEDING SERVICE BRAKE SYSTEM (Contd)

12. Remove four locknuts (8), screws (1), washers (9), and shield (7) from air-hydraulic cylinder (4). Discard locknuts (8).
13. Clean upper and lower bleeder screws (2) and (3) on air-hydraulic cylinder (4).
14. Install hose (5) on upper bleeder screw (2) and place opposite end of hose (5) in clear container (6) half full of brake fluid. Ensure hose (5) is below fluid level in container (6).
15. Open upper bleeder screw (2) and allow brake fluid to flow from air-hydraulic cylinder (4) until no air bubbles are observed in container (6).
16. Close upper bleeder screw (2) and disconnect hose (5).
17. Place hose (5) on lower bleeder screw (3). Ensure opposite end of hose (5) is below fluid level in container (6).
18. Open lower bleeder screw (3) and allow brake fluid to flow from air-hydraulic cylinder (4) until no air bubbles are observed in container (6).
19. Close lower bleeder screw (3), disconnect hose (5), and properly dispose of fluid from container (6). Tighten upper and lower bleeder screws (2) and (3) 10-20 lb-ft (14-27 N•m).
20. Install shield (7) on air-hydraulic cylinder (4) with four washers (9), screws (1), and new locknuts (8).

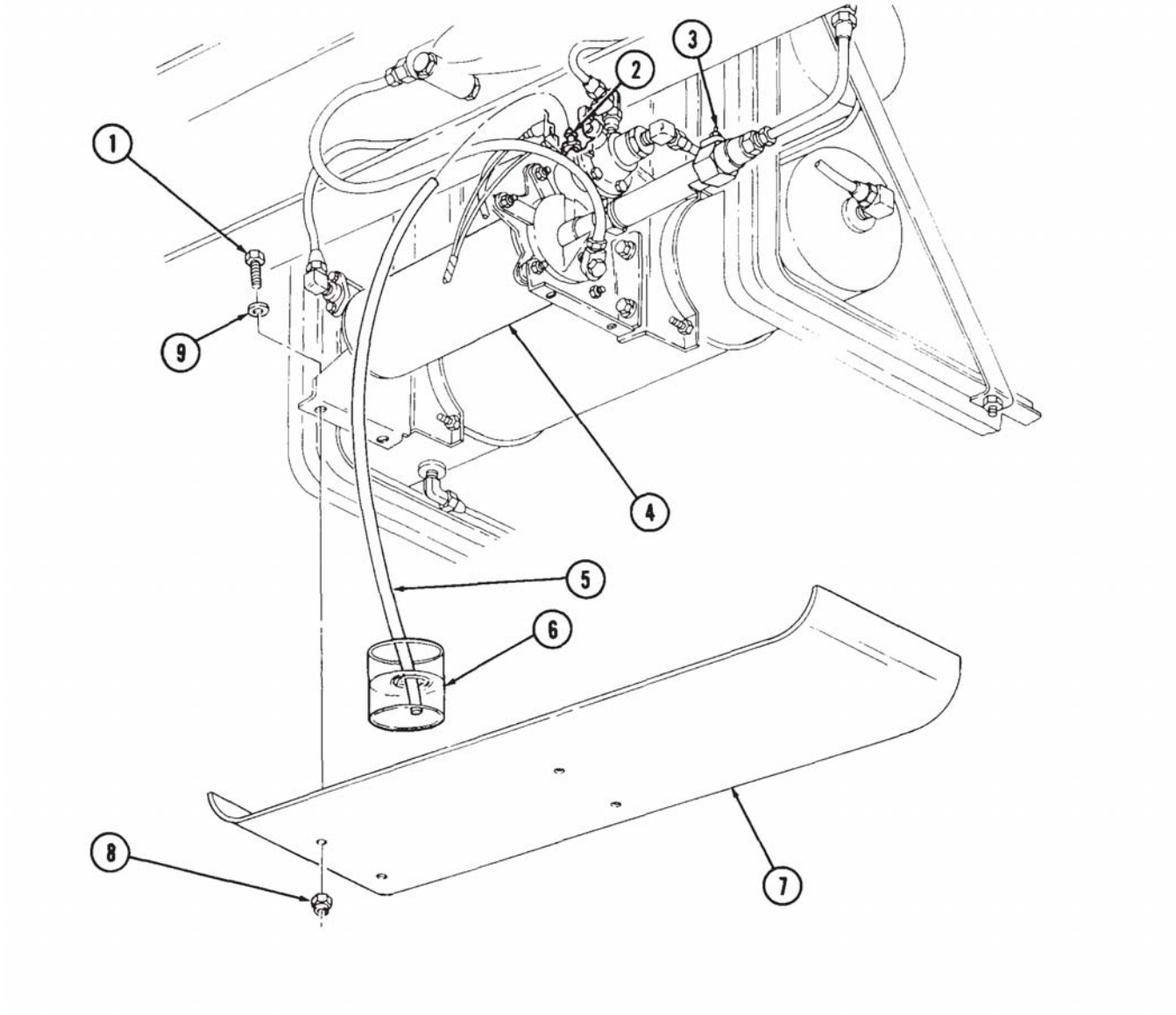

8-15. BLEEDING SERVICE BRAKE SYSTEM (Contd)

NOTE

- Air-hydraulic cylinder must be bled before bleeding wheel cylinders.
- When bleeding all wheel cylinders, start with the wheel cylinder farthest from air-hydraulic cylinder.
- When brake line is removed, bleed wheel cylinder at that wheel only.

21. Clean bleeder screw (11) on wheel cylinder (10).
22. Place hose (5) on bleeder screw (11) and place opposite end of hose (5) in container (6) half full of brake fluid. Ensure hose (5) is below fluid level in container (6).
23. Open bleeder screw (11) and allow brake fluid to flow from wheel cylinder (10) until no air bubbles are observed in container (6).
24. Close bleeder screw (11), disconnect hose (5), and properly dispose of fluid from container (6). Tighten bleeder screw (11) 10-20 lb-ft (14-27 N•m).

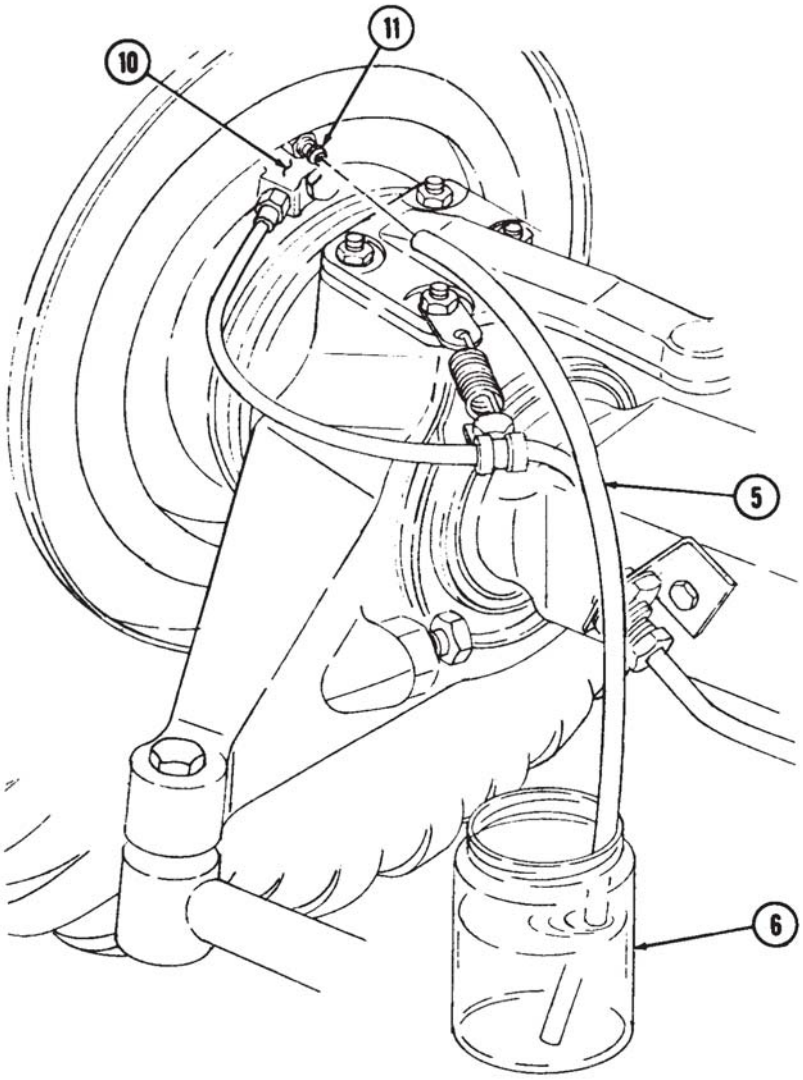

8-15. BLEEDING SERVICE BRAKE SYSTEM (Contd)

25. Close valve (1) and remove hose (2) from bleeder adapter (3).

NOTE

Follow equipment manufacturer's instructions for storing bleeder tank.

26. Remove bleeder adapter (3) from master cylinder (4).
27. Check that master cylinder (4) is at proper fluid level.
28. Install filler plug (12) on master cylinder (4). Tighten filler plug (12) 15-20 lb-ft (20-27 N•m).
29. Close master cylinder access panel (9) and install on crossmember (13) with new screw-assembled lockwasher (8).

b. Manual Method

1. Remove screw-assembled lockwasher (8) and open master cylinder access panel (9). Discard screw-assembled lockwasher (8).
2. Clean surface of master cylinder filler plug (12) with clean rags.
3. Remove filler plug (12) and check that master cylinder (4) is at proper fluid level.

NOTE

Procedures for manually bleeding master air-hydraulic and wheel cylinders are the same. The following steps are for the master cylinder only.

4. Clean bleeder screw (5) on master cylinder (4).
5. Place hose (7) on bleeder screw (5) and place opposite end in clear container (6) half full of brake fluid. Ensure hose (7) is below fluid level in container (6).

NOTE

Assistant will help with steps 6 through 8.

6. Direct assistant to slowly pump brake pedal (10) three times, then hold brake pedal (10) to cab floor (11).
7. Open bleeder screw (5) and allow brake fluid to flow until no air bubbles are observed in container (6).
8. Close bleeder screw (5). Direct assistant to release brake pedal (10).
9. Repeat steps 6 through 8 until no air bubbles are observed in container (6).
10. Tighten bleeder screw (5) 10-20 lb-ft (14-27 N•m).
11. Remove hose (7) and properly dispose of brake fluid from container (6).
12. Repeat step 3 to ensure master cylinder (4) is at proper fluid level. Fill if necessary.

8-15. BLEEDING SERVICE BRAKE SYSTEM (Contd)

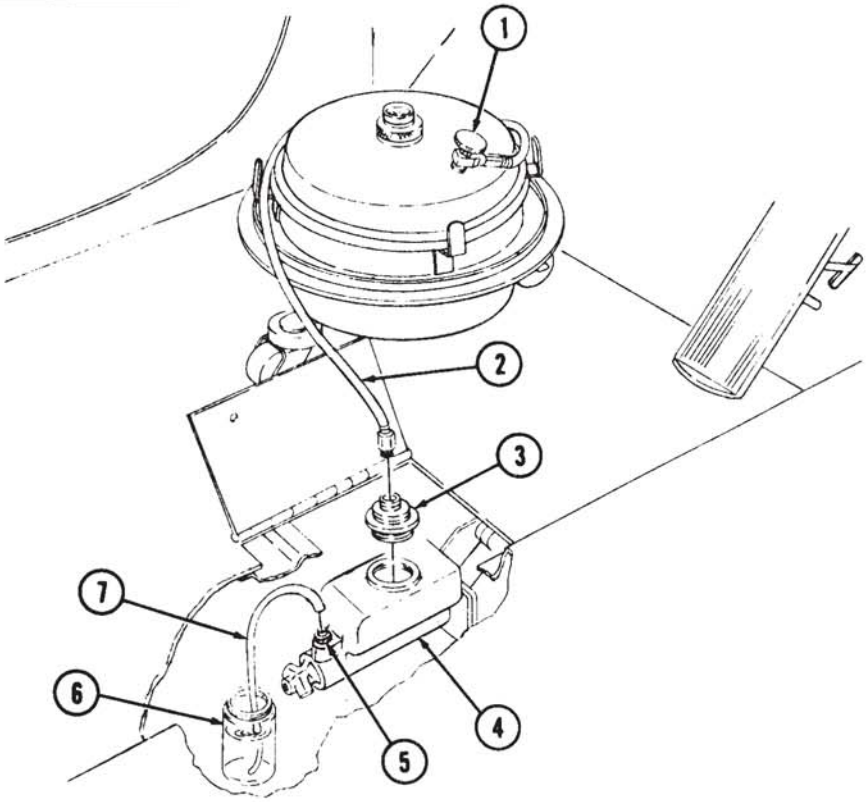

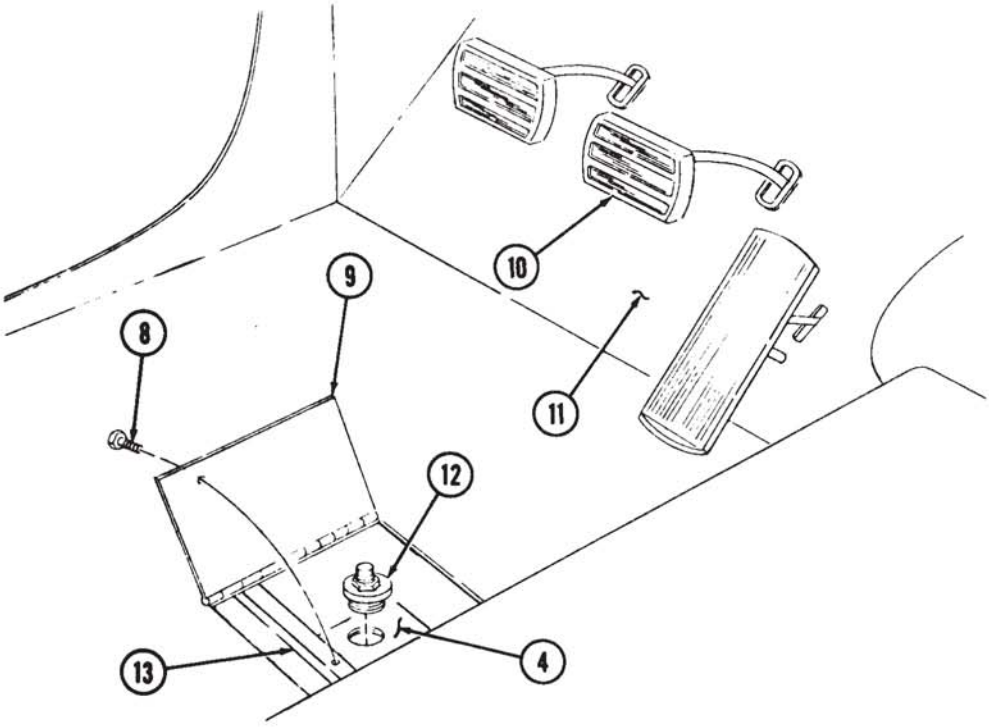

FOLLOW-ON TASK Adjust service brakes (para. 8-9).

8-16. BRAKE PEDAL REPLACEMENT

THIS TASK COVERS:

a. Removal **b. Installation**

INITIAL SETUP

APPLICABLE MODELS
All

MATERIALS/PARTS
Locknut
Chalk (Appendix C, Item 10)

REFERENCES (TM)
TM 9-2320-260-10
TM 9-2320-260-20P

EQUIPMENT CONDITION
Parking brake set (TM 9-2320-260-10).

a. Removal

1. Using chalk, mark position of brake pedal (2) next to cab floor (5).
2. Remove locknut (7), screw (4), brake pedal (2), and rubber bumper (1) from brake lever (6). Discard locknut (7).
3. Remove rubber pad (3) from brake pedal (2). Replace if damaged.

b. Installation

1. Install rubber pad (3) on brake pedal (2).
2. Place rubber bumper (1) and brake pedal (2) on brake lever (6), aline chalk mark on brake pedal (2) with cab floor (5), and install with screw (4) and new locknut (7).

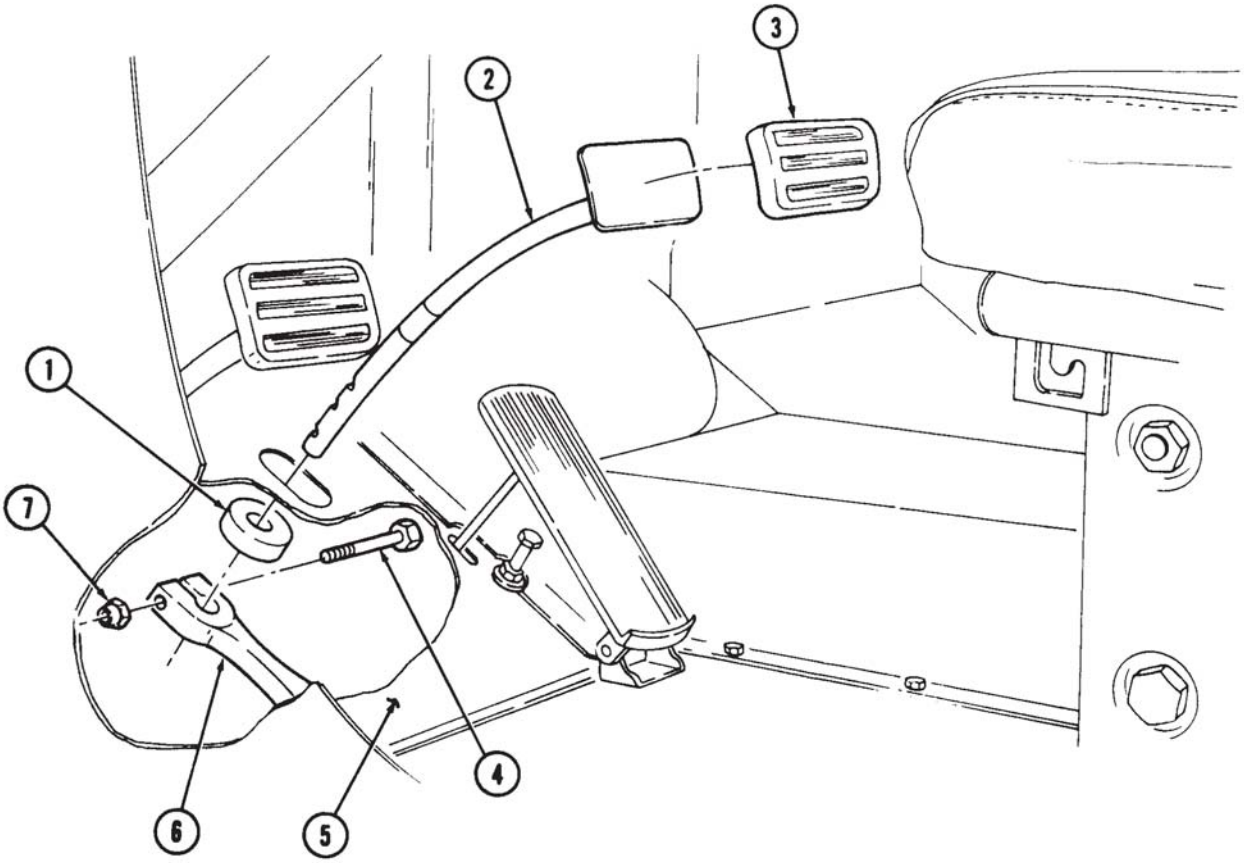

8-17. BRAKE PEDAL ADJUSTMENT

THIS TASK COVERS:

a. Test

b. Adjustment

INITIAL SETUP

APPLICABLE MODELS
All

MATERIALS/PARTS
Cotter pin
Chalk (Appendix C, Item 10)

REFERENCES (TM)
TM 9-2320-260-10
TM 9-2320-260-20P

EQUIPMENT CONDITION
Parking brake set (TM 9-2320-260-10).

a. Test

1. Using chalk, mark brake pedal shaft (1) next to cab floor (3).
2. Slowly push brake pedal (2) down with hand until pressure is felt.
3. Make second chalk mark at cab floor (3). Release brake pedal (2) and measure distance between chalk marks on brake pedal shaft (1). Distance should be from 1/4-1/2 in. (6.35-12.7 mm). If distance is larger or smaller, perform task b.

b. Adjustment

1. Remove return spring (11) from brake lever (4) and bracket (12).
2. Remove cotter pin (5), straight pin (10), and pushrod clevis (9) from master cylinder (7). Discard cotter pin (5).
3. Loosen jamnut (8) from master cylinder pushrod (6).
4. To increase brake pedal travel, turn clevis (9) in, toward master cylinder (7).
5. To decrease brake pedal travel, turn clevis (9) out, away from master cylinder (7).
6. Tighten jamnut (8) against master cylinder pushrod (6).
7. Install clevis (9) on brake lever (4) with straight pin (10) and new cotter pin (5).
8. Install return spring (11) on brake lever (4) and bracket (12).

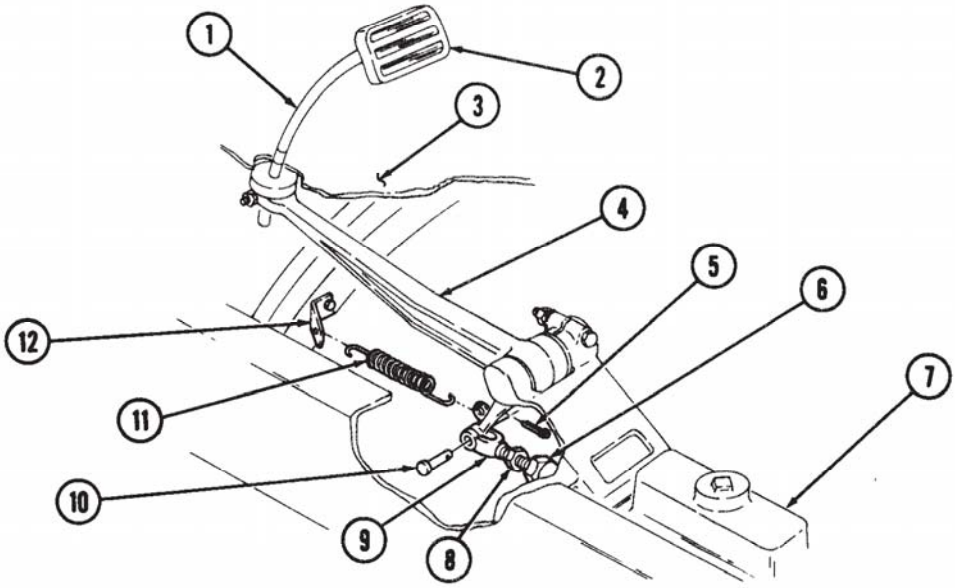

8-18. GENERAL

a. For fabrication instructions of air lines, refer to TM 9-243.

b. For schematic representation of air line locations and routings, see appendix E of this manual.

8-19. COMPRESSED AIR AND BRAKE SYSTEM MAINTENANCE INDEX

PARA. NO.	TITLE	PAGE NO.
8-20.	Air Supply Valve Replacement	8-38
8-21.	DoubleCheck Valve Replacement	8-40
8-22.	Air Couplings Replacement	8-42
8-23.	Airbrake Hand Control Valve Replacement	8-48
8-24.	Air Pack Reservoir Replacement	8-50
8-25.	Air Compressor Governor Maintenance	8-54
8-26.	Trailer Brake Couplings Replacement	8-58

8-20. AIR SUPPLY VALVE REPLACEMENT

THIS TASK COVERS:

a. Removal **b. Installation**

INITIAL SETUP

APPLICABLE MODELS
All

MATERIALS/PARTS
Two locknuts
Antiseize tape (Appendix C, Item 30)

REFERENCES (TM)
TM 9-2320-260-10
TM 9-2320-260-20P

EQUIPMENT CONDITION
- Parking brake set (TM 9-2320-260-10).
- Air reservoir drained (TM 9-2320-260-10).

GENERAL SAFETY INSTRUCTIONS
Do not disconnect air lines before draining air reservoirs.

a. Removal

WARNING

Do not disconnect air lines before draining air reservoir. Small parts under pressure may shoot out with high velocity, causing injury to personnel.

1. Disconnect air line (4) from adapter (3).

8-20. AIR SUPPLY VALVE REPLACEMENT (Contd)

NOTE

Assistant will help with step 2.

2. Remove two locknuts (1), screws (5), and air supply valve (2) from firewall (6). Discard locknuts (1).
3. Remove adapter (3) from air supply valve (2).

b. Installation

1. Apply antiseize tape to male threads of adapter (3).

NOTE

Assistant will help with step 2.

2. Install adapter (3) on air supply valve (2).
3. Install air supply valve (2) on firewall (6) with two screws (5) and new locknuts (1).
4. Connect air line (4) to adapter (3).

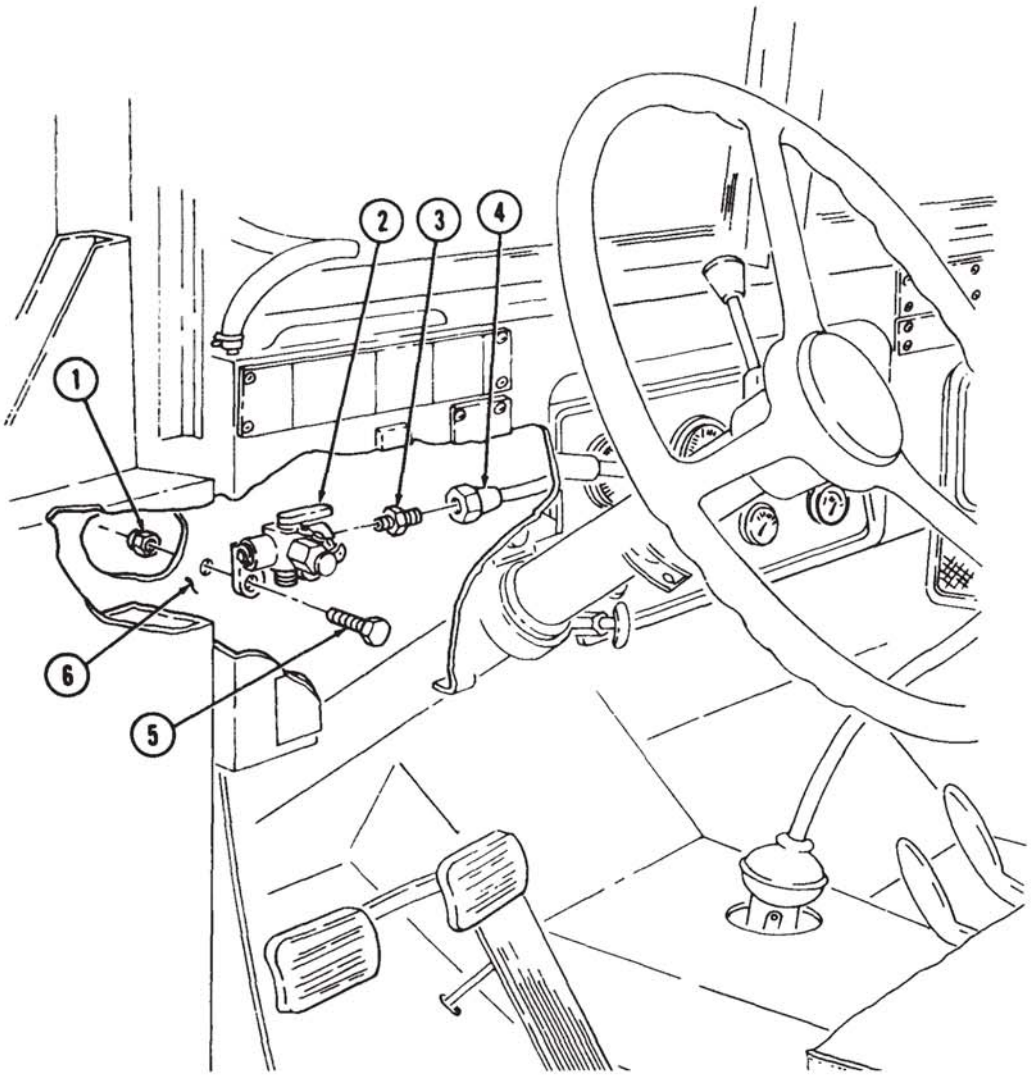

FOLLOW-ON TASK: Start engine (TM 9-2320-260-10) and check for leaks.

8-21. DOUBLECHECK VALVE REPLACEMENT

THIS TASK COVERS:

a. Removal

b. Installation

INITIAL SETUP

APPLICABLE MODELS

All

MATERIALS/PARTS

Locknut
Antiseize tape (Appendix C, Item 30)

REFERENCES (TM)

TM 9-2320-260-10
TM 9-2320-260-20P

EQUIPMENT CONDITION

- Parking brake set (TM 9-2320-260-10).
- Air reservoirs drained (TM 9-2320-260-10).
- Transfer to front-rear axle propeller shaft removed (para. 7-2).

GENERAL SAFETY INSTRUCTIONS

Do not disconnect air lines before draining air reservoirs.

WARNING

Do not disconnect air lines before draining air reservoir. Small parts under pressure may shoot out with high velocity, causing injury to personnel.

NOTE

- M815, M818, and M819 vehicles are equipped with front and rear doublecheck valves. This procedure covers only the rear doublecheck valve.
- Tag all air lines for installation.

a. Removal

1. Disconnect air lines (1) and (14) from elbows (2) and (13).
2. Disconnect air line (5) from adapter (4).
3. Remove locknut (11), screw (15), and check valve (12) from frame (10). Discard locknut (11).

NOTE

Note position of elbows for installation.

4. Remove adapter (4), elbows (13) and (2), connector (3), and nipple (16) from check valve (12).
5. Remove air lines (6) and (9) from tee (8).
6. Remove tee (8) from check valve (7).

8-21. DOUBLECHECK VALVE REPLACEMENT (Contd)

b. Installation

1. Apply antiseize tape to male threads of elbows (2) and (13), adapter (4), tee (8), and nipple (16).
2. Install tee (8) on check valve (7).
3. Install air lines (6) and (9) on tee (8).
4. Install nipple (16), connector (3), adapter (4), and elbows (2) and (13) on check valve (12).
5. Install check valve (12) on frame (10) with screw (15) and new locknut (11).
6. Connect air line (5) on adapter (4).
7. Connect air lines (1) and (14) on elbows (2) and (13).

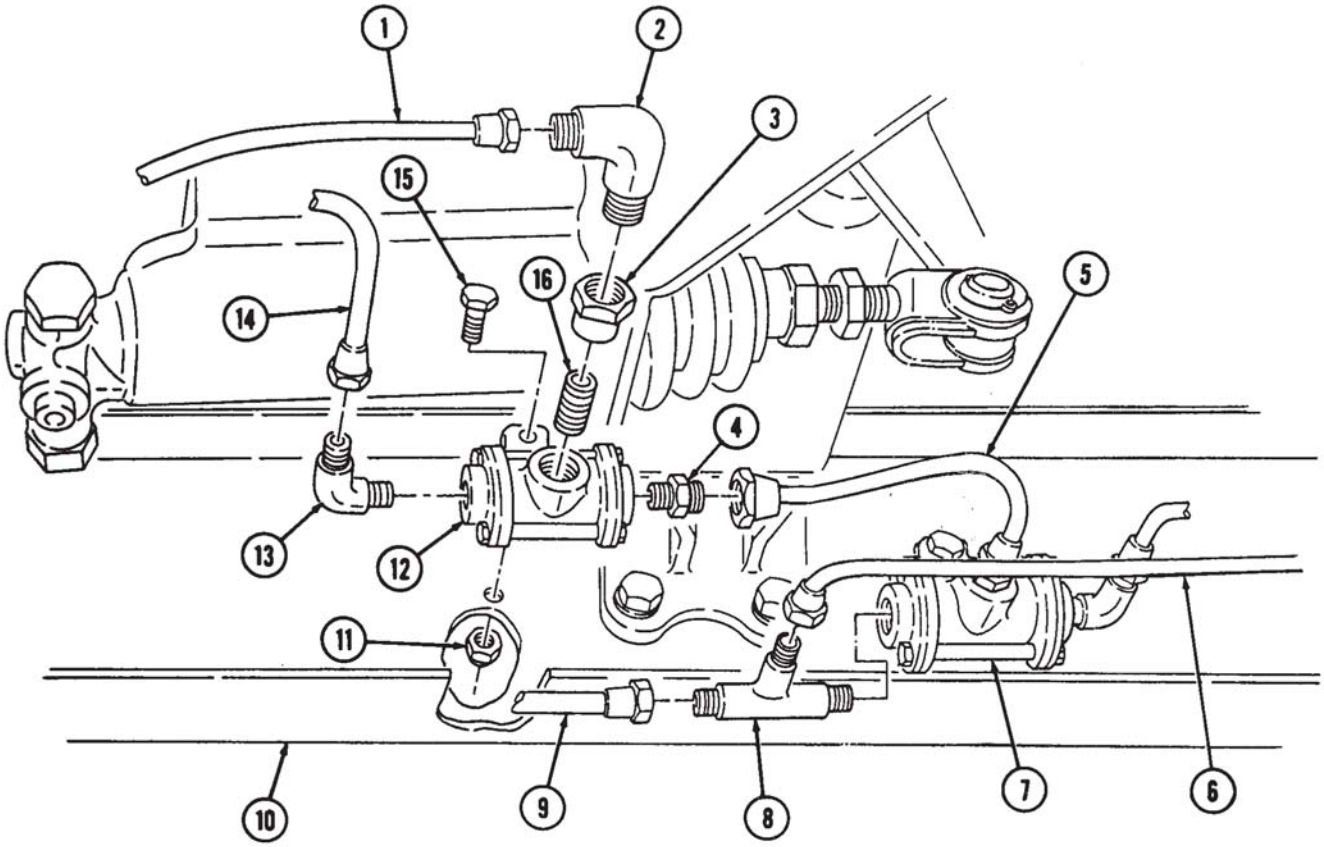

FOLLOW-ON TASKS: • Install transfer to front-rear axle propeller shaft (para. 7-2).
• Start engine (TM 9-2320-260-10) and check for air leaks.

8-22. AIR COUPLINGS REPLACEMENT

THIS TASK COVERS:

a. Front Air Couplings Removal
b. Front Air Couplings Installation
c. Rear Air Couplings Removal (M813, M813A1, M815, M819)
d. Rear Air Couplings Installation (M813, M813A1, M815, M819)
e. Rear Air Couplings Removal (except M813, M813A1, M815, M819)
f. Rear Air Couplings Installation (except M813, MW3A1, M815, M819)

INITIAL SETUP

APPLICABLE MODELS
All

MATERIALS/PARTS
Six locknuts
Three lockwashers
Cotter pin
Antiseize tape (Appendix C, Item 30)

REFERENCES (TM)
TM 9-2320-260-10
TM 9-2320-260-20P

EQUIPMENT CONDITION
Ž Parking brake set (TM 9-2320-260-10).
Ž Air reservoirs drained (TM 9-2320-260-10).

GENERAL SAFETY INSTRUCTIONS
Do not disconnect air lines before draining air reservoirs.

NOTE

Right and left hand air couplings are removed basically the same, This procedure covers the left side only.

a. Front Air Couplings Removal

WARNING

Do not disconnect air lines before draining air reservoir. Small parts under pressure may shoot out with high velocity, causing injury to personnel.

1. Remove cotter pin (2) and chain (1) from fender support (3). Discard cotter pin (2).
2. Remove dummy coupling (18) from air coupling (17).
3. Remove air coupling (17) and nipple (16) from valve (15).
4. Remove air line (10), adapter (9), valve (4), and nipple (5) from elbow (6).
5. Remove elbow (6) from coupling (13).
6. Remove nut (7), lockwasher (8), coupling (13), bracket (12), and identification plate (11) from fender support (3). Discard lockwasher (8).
7. Remove coupling (13) and elbow (14) from valve (15).

8-22. AIR COUPLINGS REPLACEMENT (Contd)

b. Front Air Couplings Installation

NOTE

Fittings must be cleaned and inspected for cracks and stripped threads.

1. Apply antiseize tape to male threads of coupling (13), elbows (6) and (14), nipples (16) and (5), and adapter (9).
2. Install elbow (14), nipple (16), and air coupling (17) on valve (15).
3. Install coupling (13) in elbow (14).
4. Install identification plate (11), bracket (12), and coupling (13) on fender support (3) with new lockwasher (8) and nut (7).
5. Install elbow (6) on coupling (13).
6. Install nipple (5), valve (4), and adapter (9) on elbow (6).
7. Install air line (10) on elbow (6).
8. Install dummy coupling (18) on air coupling (17).
9. Install chain (1) and new cotter pin (2) on fender support (3).

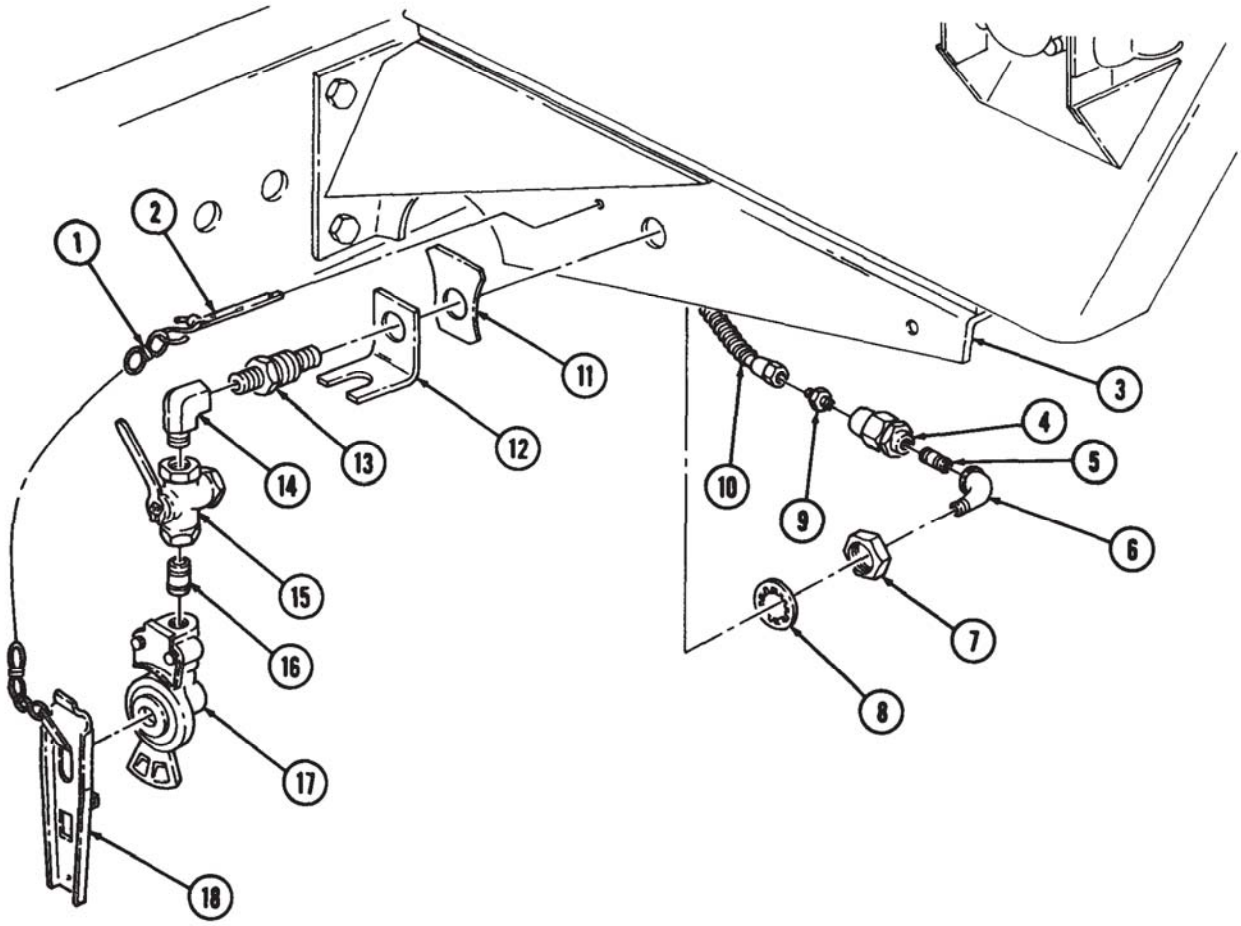

8-22. AIR COUPLINGS REPLACEMENT (Contd)

c. Rear Air Couplings Removal (M813, M813A1, M815, M819)

NOTE

Left and right rear air couplings are removed basically the same.

1. Remove dummy coupling (10) and chain (9) from air coupling (11) and bracket (12).
2. Remove air coupling (11) and nipple (8) from valve (7).
3. Disconnect airline (1) from elbow (2).
4. Remove elbow (2) and coupling (3) from adapter (4).
5. Remove four locknuts (15), washers (14), screws (6), bracket (12), and plate (13) from frame (5). Discard locknuts (15).
6. Remove valve (7) from elbow (16).
7. Remove elbow (16) from coupling (17).
8. Remove coupling (17) from adapter (4).
9. Remove nut (18), lockwasher (19), identification plate (20), and adapter (4) from frame (5). Discard lockwasher (19).

d. Rear Air Couplings Installation (M813, M813A1, M815, M819)

NOTE

Fittings must be cleaned and inspected for cracks and stripped threads.

1. Apply antiseize tape to male threads of elbows (2) and (16), adapter (4), coupling (17), and nipple (8).
2. Install adapter (4) and identification plate (20) on frame (5) with new lockwasher (19) and nut (18). Do not tighten nut (18) on left side of vehicle.
3. Install coupling (17) and elbow (16) on adapter (4).
4. Install valve (7) and nipple (8) on elbow (16).
5. Position plate (13) on frame (5) and install with two screws (6), washers (14), and new locknuts (15).
6. Position bracket (12) on plate (13) and install with two screws (6). washers (14). and new locknuts (15). Ensure nipple (8) goes through bracket (12).
7. Install coupling (3) and elbow (2) on adapter (4).
8. Connect air line (1) on elbow (2).
9. Install air coupling (11) on nipple (8).
10. Install dummy coupling (10) and chain (9) on air coupling (11) and bracket (12).

8-22. AIR COUPLINGS REPLACEMENT (Contd)

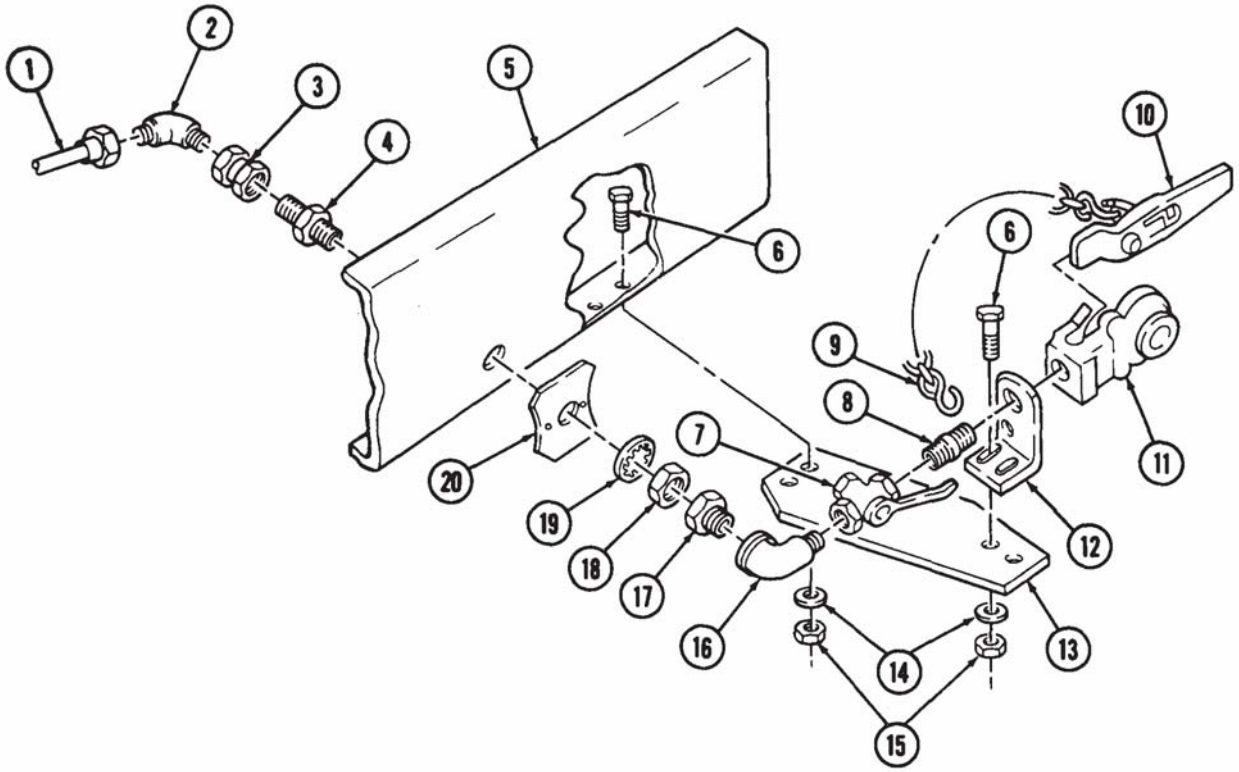

8-22. AIR COUPLINGS REPLACEMENT (Contd)

e. Rear Air Couplings Removal (except M813, M813A1, M815, M819)

1. Remove dummy coupling (9) and chain (10) from air coupling (11) and bracket (14).
2. Remove air coupling (11) from nipple (12).
3. Disconnect air line (1) from adapter (2).
4. Remove adapter (2), nut (3), and lockwasher (4) from adapter (21). Discard lockwasher (4).
5. Remove two locknuts (16), washers (15), screws (5), plate (6), and bracket (14) from frame (7). Discard locknuts (16).
6. Remove nipple (12), elbow (17), adapter (21), elbow (20), and nipple (19) from valve (18).
7. Remove two screws (8) and identification plate (13) from bracket (14).

f. Rear Air Couplings Installation (except M813, M813A1, M815, M819)

NOTE

Fittings must be cleaned and inspected for cracks and stripped threads.

1. Apply antiseize tape to male threads of adapters (2) and (21), nipples (19) and (12), and elbows (20) and (17).
2. Install identification plate (13) on bracket (14) with two screws (8).
3. Install plate (6) and bracket (14) on frame (7) with two screws (5), washers (15), and new locknuts (16).
4. Install nipple (19), elbow (20), adapter (21), and elbow (17) on valve (18).
5. Install adapter (21) on bracket (6) with new lockwasher (4) and nut (3).
6. Install adapter (2) on adapter (21).
7. Connect air line (1) to adapter (2).
8. Insert nipple (12) through bracket (14) and install on elbow (17).
9. Install air coupling (11) on nipple (12).
10. Install dummy coupling (9) and chain (10) on air coupling (11) and bracket (14).

8-22. AIR COUPLINGS REPLACEMENT (Contd)

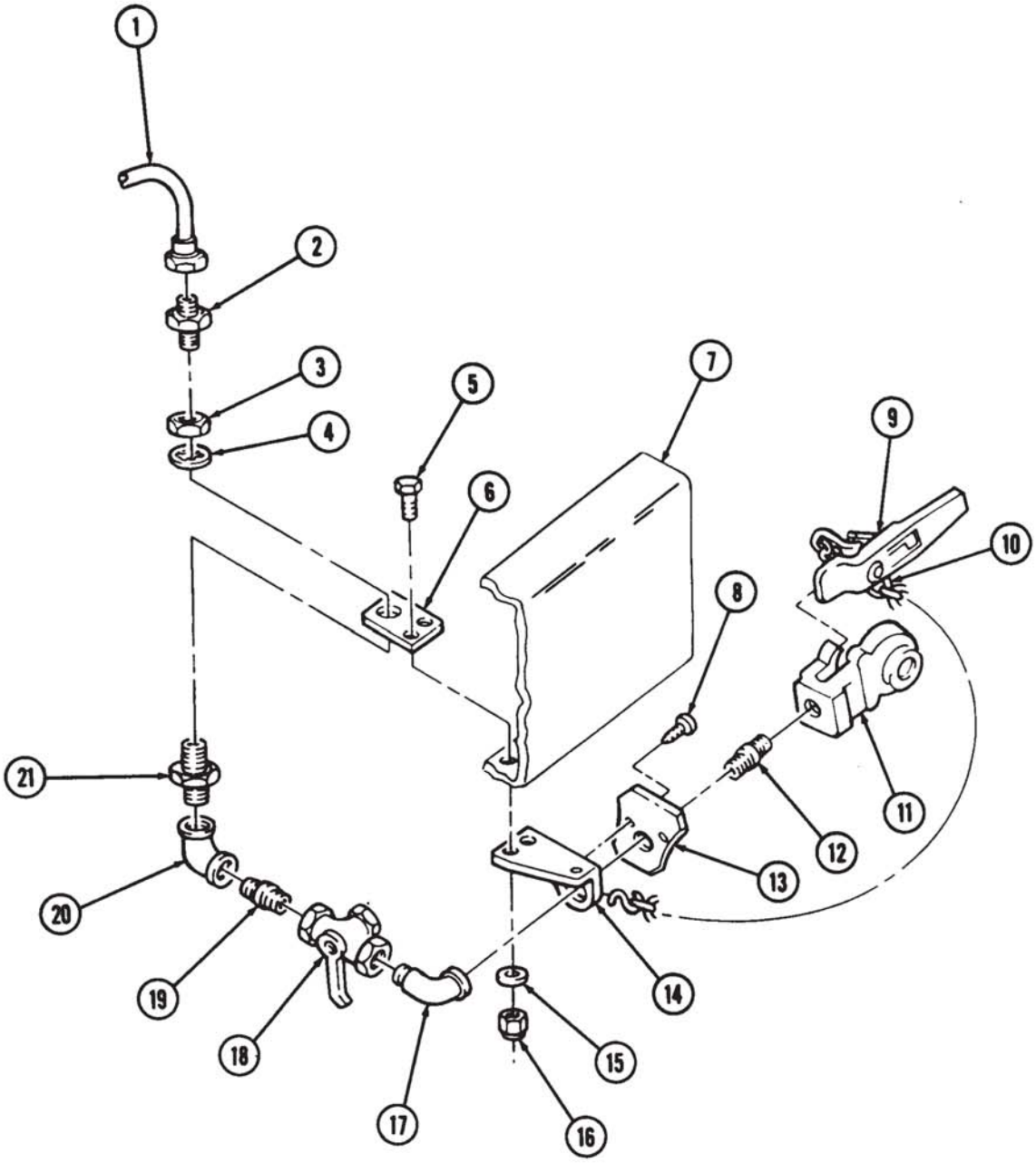

FOLLOW-ON TASK: Start engine (TM 9-2320-260-10), allow air pressure to build to normal operating pressure, and check for air leaks.

8-23. AIRBRAKE HAND CONTROL VALVE REPLACEMENT

THIS TASK COVERS:

a. Removal **b. Installation**

INITIAL SETUP

APPLICABLE MODELS
M815, M818, M819

MATERIALS/PARTS
Two lockwashers
Antiseize tape (Appendix C, Item 30)

REFERENCES (TM)
TM 9-2320-260-10
TM 9-2320-260-20P

EQUIPMENT CONDITION
- Parking brake set (TM 9-2320-260-10).
- Air reservoirs drained (TM 9-2320-260-10).

GENERAL SAFETY INSTRUCTIONS
Do not disconnect air lines before draining air reservoirs.

a. Removal

WARNING

Do not disconnect air lines before draining air reservoir. Small parts under pressure may shoot out with high velocity, causing injury to personnel.

NOTE

Tag air tubes for installation.

1. Disconnect two air tubes (7) from adapters (8).
2. Remove two screws (3), lockwashers (4), clamp (5), control valve (1), and strap (6) from steering column (2). Discard lockwashers (4).
3. Remove two adapters (8) from control valve (1).

b. Installation

1. Apply anti seize tape to male threads of two adapters (8).
2. Install two adapters (8) on control valve (1).
3. Install strap (6), control valve (1), and clamp (5) on steering column (2) with two new lockwashers (4) and screws (3). Finger tighten screws (3).
4. Connect air tubes (7) to adapters (8).
5. Tighten two screws (3).

8-23. AIRBRAKE HAND CONTROL VALVE REPLACEMENT (Contd)

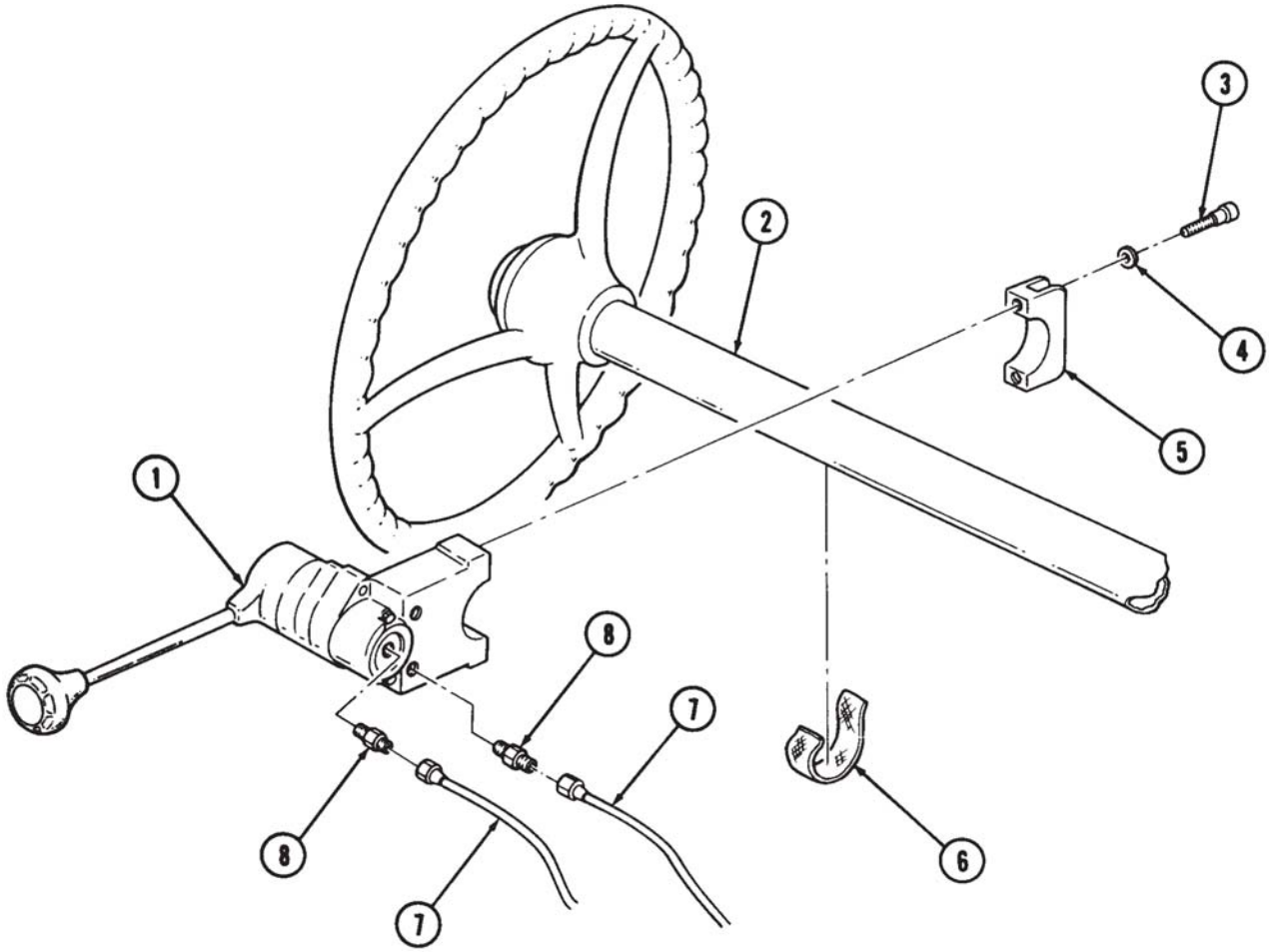

FOLLOW-ON TASK Start engine (TM 9-2320-260-10) and check for leaks.

8-24. AIR PACK RESERVOIR REPLACEMENT

THIS TASK COVERS:

a. Removal **b. Installation**

INITIAL SETUP

APPLICABLE MODELS
All

MATERIALS/PARTS
Ten locknuts
Four tape strips
Antiseize tape (Appendix C, Item 30)

REFERENCES (TM)
TM 9-2320-260-10
TM 9-2320-260-20P

EQUIPMENT CONDITION
- Parking brake set (TM 9-2320-260-10).
- Air reservoira drained (TM 9-2320-260-10).
- Toolbox removed (para. 11-29).

GENERAL SAFETY INSTRUCTIONS
Do not disconnect air lines before draining air reservoirs.

a. Removal

WARNING

Do not disconnect air lines before draining air reservoir. Small parts under pressure may shoot out with high velocity, causing injury to personnel.

NOTE

Tag air lines, vent tubes, and fittings for installation.

1. Remove two locknuts (13), screws (22), clamps (12), and vent tube (14) from support flange (11). Discard locknuts (13).
2. Disconnect vent tube (14) from elbow (19).
3. Remove valve (16) and adapter (15) from vent tube (14).
4. Disconnect air lines (1) and (33) from elbow (2) and tee (34).
5. Disconnect air line (6) from elbow (5).
6. Disconnect air line (10) from elbows (23) and (21).
7. Disconnect air line (27) from elbow (31).
8. Remove four locknuts (9), two U-bolts (17), and lower air reservoir (29) from supports (8). Discard locknuts (9).
9. Remove two tape strips (18) from lower air reservoir (29). Discard tape strips (18).
10. Remove safety relief valve (25) from elbow (26).
11. Remove four elbows (19), (21), (26), (31) and three bushings (20), (24), (30) from lower air reservoir (29).
12. Remove four locknuts (7), two U-bolts (32), and upper air reservoir (4) from supports (8). Discard locknuts (7).
13. Remove two tape strips (28) from upper air reservoir (4). Discard tape strips (28).
14. Remove elbow (2), tee (34), bushing (3), and two elbows (5) and (23) from upper air reservoir (4).

8-24. AIR PACK RESERVOIR REPLACEMENT (Contd)

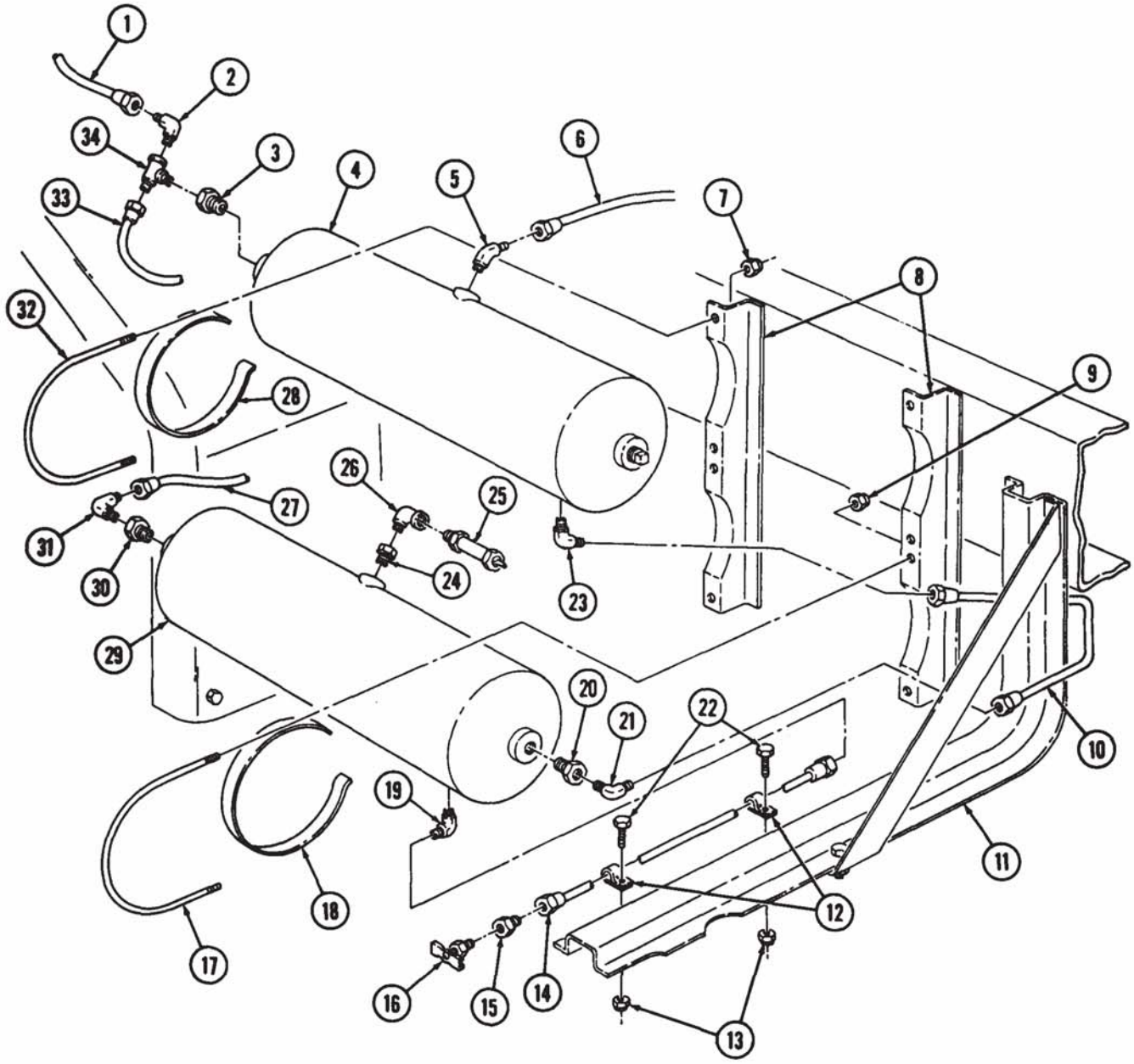

8-24. AIR PACK RESERVOIR REPLACEMENT (Contd)

b. Installation

NOTE

If installing new air reservoir, use fittings from old air reservoir. Fittings must be cleaned and inspected for cracks and stripped threads.

1. Apply antiseize tape to male threads of elbows (2), (5), (19), (21), (23), (26), (31), tee (34), adapters (3), (15), (20), (24), (30), and relief valve (25).
2. Install two elbows (5) and (23), bushing (3), tee (34), and elbow (2) on upper air reservoir (4).
3. Install two new tape strips (28) on upper air reservoir (4).
4. Position upper air reservoir (4) on supports (8) and install with two U-bolts (32) and four new locknuts (7). Finger tighten locknuts (7).
5. Install three bushings (20), (24), (30) and four elbows (19), (21), (26), and (31) on lower air reservoirs (29).
6. Install safety relief valve (25) on elbow (26).
7. Install two new tape strips (18) on lower air reservoir (29).
8. Position lower air reservoir (29) on supports (8) and install with two U-bolts (17) and four new locknuts (9). Finger tighten locknuts (9).
9. Connect air line (10) to elbows (21) and (23).
10. Tighten new locknuts (7) and (9) on U-bolts (32) and (17).
11. Connect air line (27) to elbow (31).
12. Connect air lines (1) and (33) to elbow (2) and tee (34).
13. Connect air line (6) to elbow (5).
14. Install adapter (15) and valve (16) on vent tube (14).
15. Connect vent tube (14) to elbow (19).
16. Install vent tube (14) on support flange (11) with two clamps (12), screws (22), and new locknuts (13).

8-24. AIR PACK RESERVOIR REPLACEMENT (Contd)

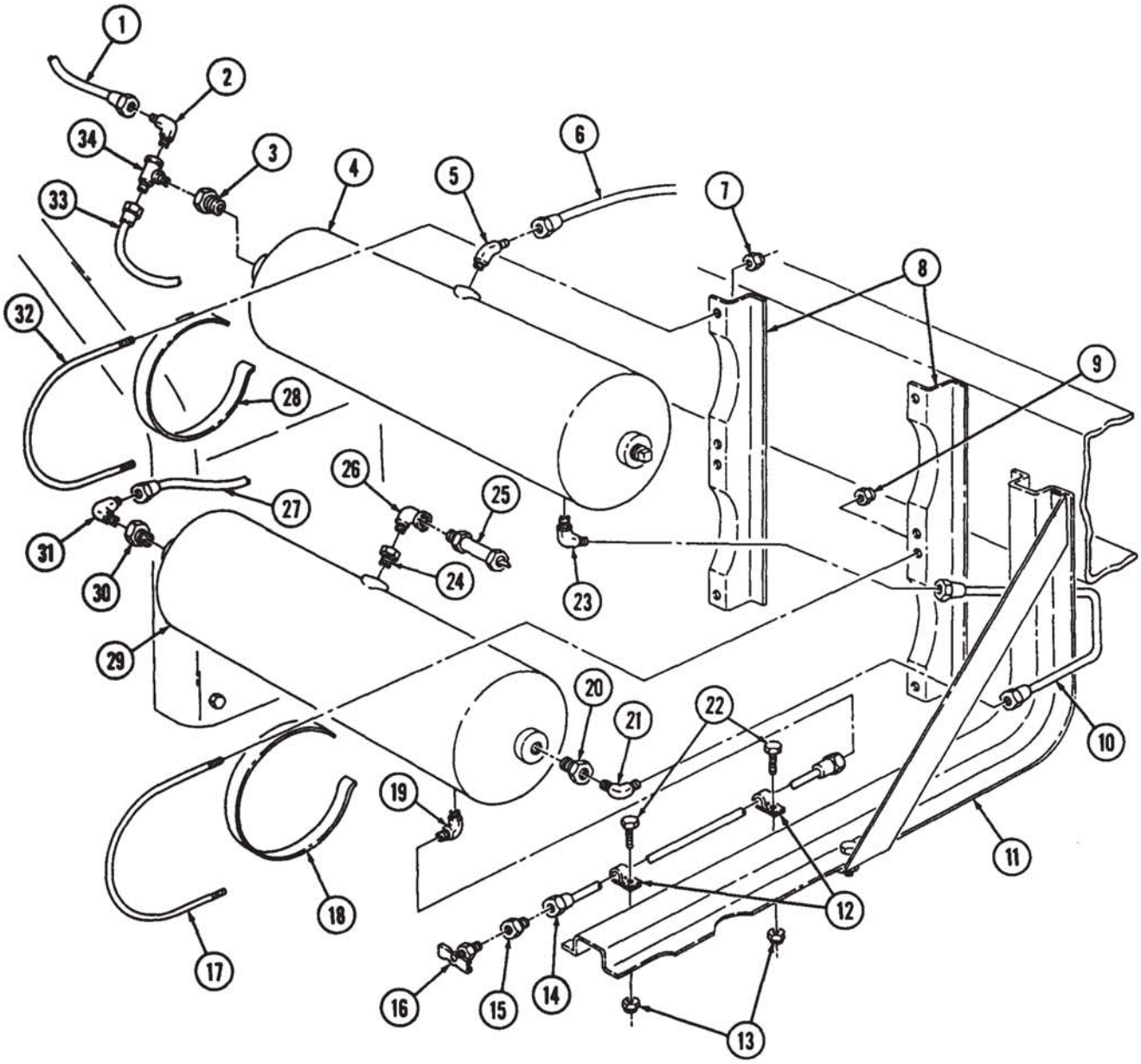

FOLLOW-ON TASKS: • Start engine (TM 9-2320-260-10) and check air lines for leaks.
• Install toolbox (para. 11-29).

8-25. AIR COMPRESSOR GOVERNOR MAINTENANCE

THIS TASK COVERS

a. Removal
b. Installation
c. Check and Adjustment

INITIAL SETUP

APPLICABLE MODELS
All

MATERIALS/PARTS
Two lockwashers
AntiSeize tape (Appendix C, Item 30)

REFERENCES (TM)
TM 9-2320-260-10
TM 9-2320-260-20P

EQUIPMENT CONDTION
ŽParking brake set (TM 9-2320-260-10).
ŽHood raised and secured (TM 9-2320-260-10).
Ž Air reservoir drained (TM 9-2320-260-10).

GENERAL SAFETY INSTRUCTIONS
Do not disconnect air lines before draining air reservoirs.

a. Removal

WARNING

Do not disconnect air lines before draining air reservoir. Small parts under pressure may shoot out with high velocity, causing injury to personnel.

1. Disconnect air line (6) from elbow (5).
2. Disconnect air lines (7) and (9) from tee (8).
3. Remove two screws (2), lockwashers (3), and governor (4) from firewall (1). Discard lockwashers (3).
4. Remove elbow (5) and tee (8) from governor (4).

b. Installation

1. Apply antiseize tape to male threads of elbow (5) and tee (8).
2. Install tee (8) and elbow (5) on governor (4).
3. Install governor (4) on firewall (1) with two new lockwashers (3) and screws (2).
4. Connect air lines (7) and (9) to tee (8).
5. Connect air line (6) to elbow (5).

8-25. AIR COMPRESSOR GOVERNOR MAINTENANCE (Contd)

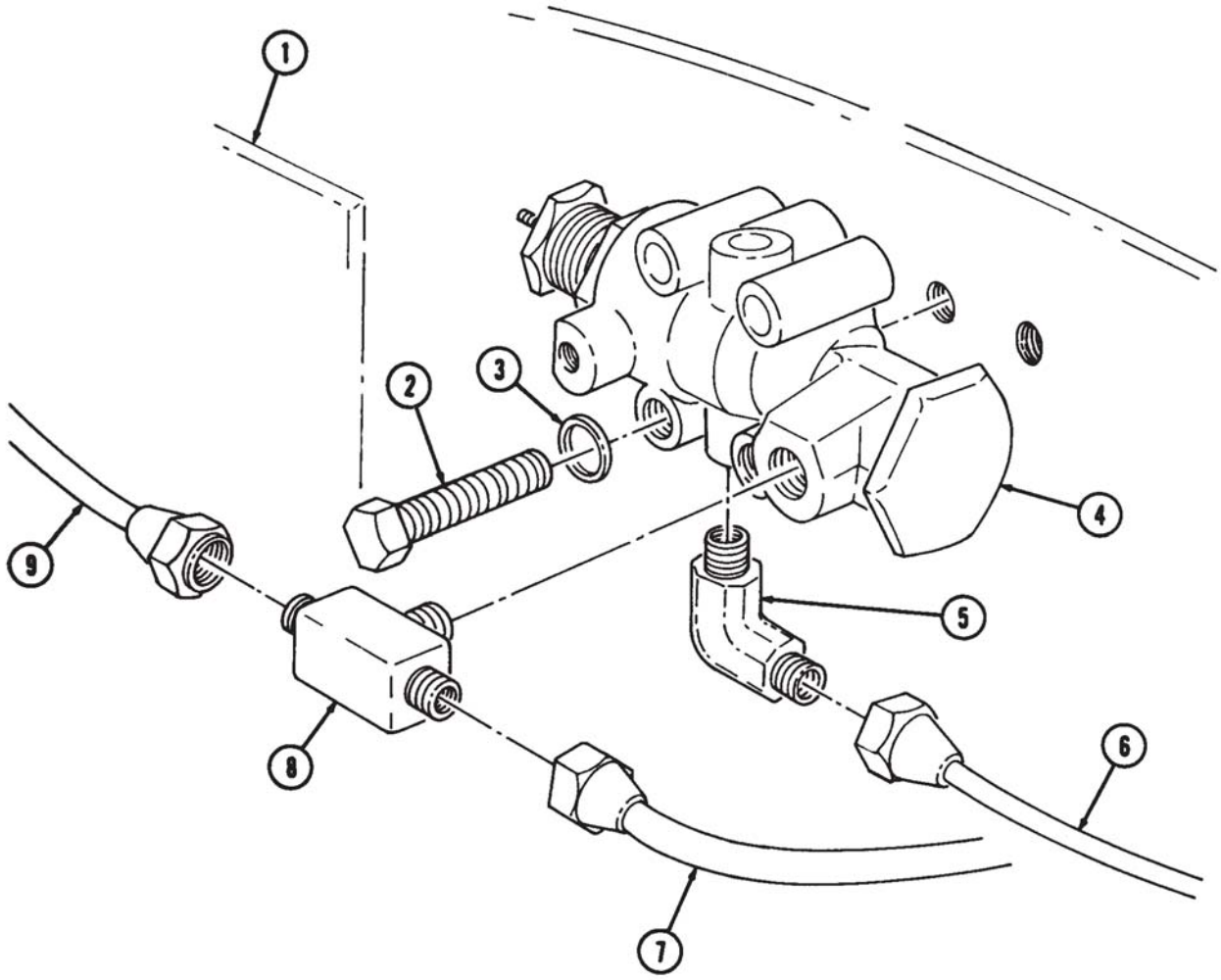

8-25. AIR COMPRESSOR GOVERNOR MAINTENANCE (Contd)

c. Check and Adjustment

1. Start engine (TM 9-2320-260-10) and allow air pressure to build until air gage (3) has a steady reading.
2. Check if air gage (3) reading shows pressure does not reach normal operating pressure, or if pressure fails to stop building at 120 psi (827 kPa).
3. If air gage reading is correct, stop engine. End of task.

NOTE

Assistant will help with steps 4 and 5.

4. If air gage reading is too low:
   a. Loosen jamnut (5).
   b. Turn adapter (4) clockwise until air gage (3) reads 85-120 psi (583-827 kPa).
   c. Check air gage (3). If air pressure is still low, check for leaks and repeat step b until air pressure reading is correct.
   d. Tighten jamnut (5).
5. If air gage reading is too high:
   a. Stop engine.
   b. Remove cap (2), open air supply valve (1), and bleed air from system until air gage (3) reads 100 psi (690 kPa).
   c. Close air supply valve (1) and install cap (2).
   d. Loosen jamnut (5) and turn adapter (4) 1/4-turn counterclockwise.
   e. Repeat steps 1 through 3. If governor (6) fails to stop air pressure build up, repeat step 5, a through d.
6. If air governor (6) fails to maintain air pressure at normal operating level, replace air governor (6) (task a).

8-25. AIR COMPRESSOR GOVERNOR MAINTENANCE (Contd)

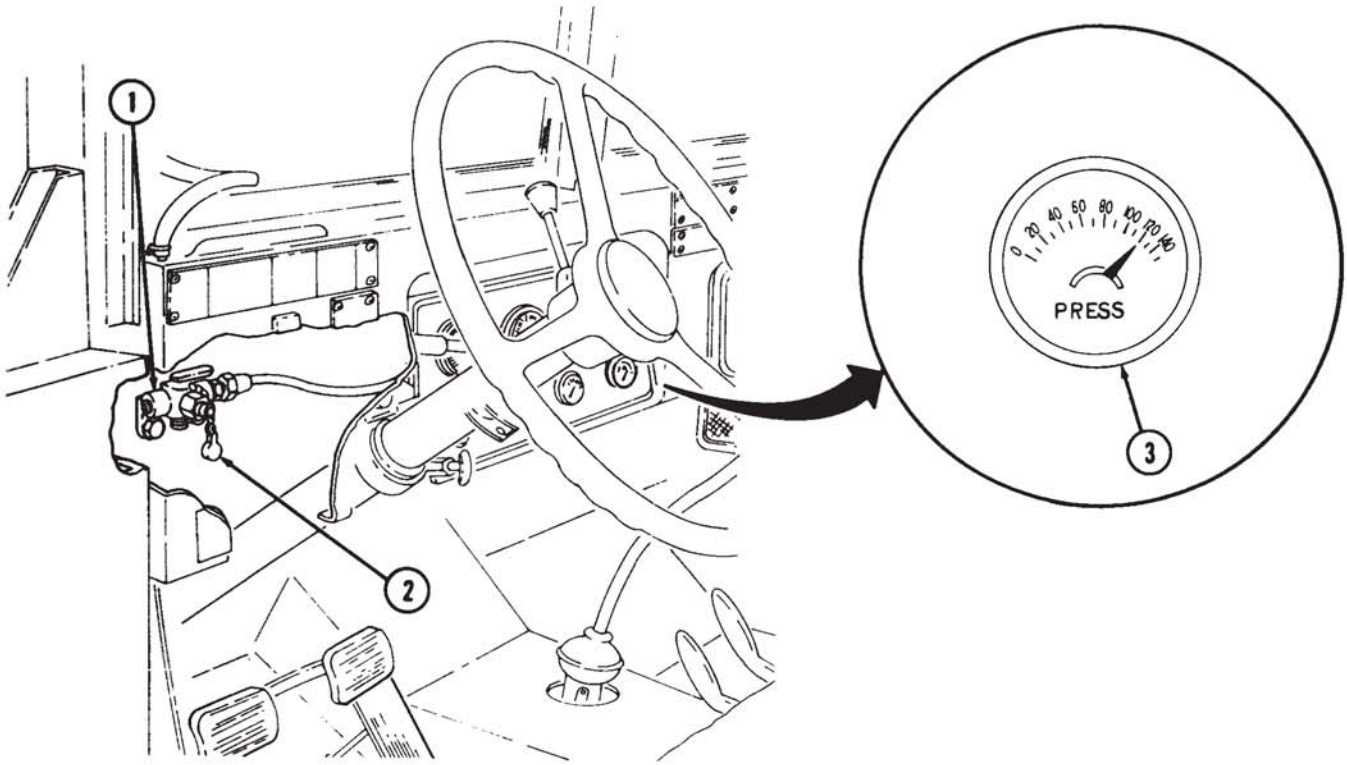

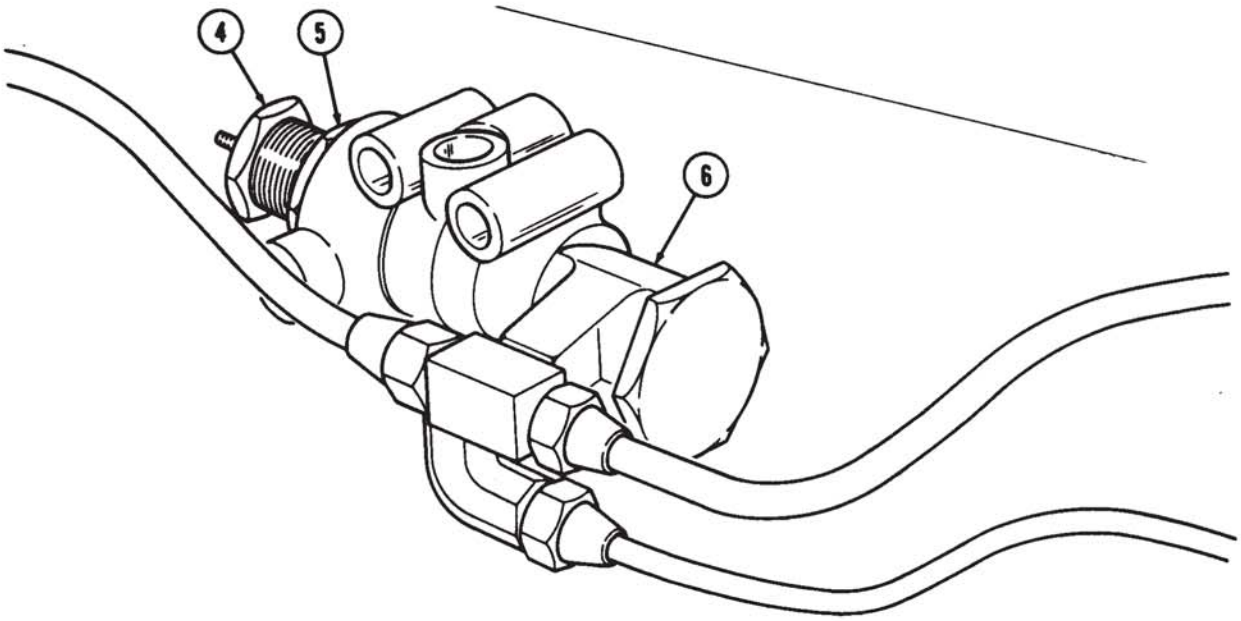

8-26. TRAILER BRAKE COUPLINGS REPLACEMENT

THIS TASK COVERS:

a. Removal **b. Installation**

INITIAL SETUP

APPLICABLE MODELS
M818

MATERIALS/PARTS
Six locknuts
Lockwasher
Antiseize tape (Appendix C, Item 30)

REFERENCES (TM)
TM 9-2320-260-10
TM 9-2320-260-20P

EQUIPMENT CONDITION
- Parking brake set (TM 9-2320-260-10).
- Air reservoirs drained (TM 9-2320-260-10).

GENERAL SAFETY INSTRUCTIONS
Do not disconnect air lines before draining air reservoirs.

a. Removal

WARNING

Do not disconnect air lines before draining air reservoir. Small parts under pressure may shoot out with high velocity, causing injury to personnel.

NOTE

Emergency and service coupling hoses are replaced the same way. This procedure covers the left coupling hoses only.

1. Remove locknut (16), screw (21), strap (17), two straps (15), and hoses (7) from cable support (1). Discard locknut (16).
2. Remove locknut (18), screw (20), clamp (19), and two hoses (7) from cable support (1). Discard locknut (18).
3. Disconnect hose (7) from valve (14).
4. Remove air coupling (6) from hose (7).
5. Disconnect air tube (11) from adapter (10).
6. Remove adapter (10) from coupling (13).
7. Remove nut (9), lockwasher (8), valve (14) with coupling (13), and data plate (12) from cable support (1). Discard lockwasher (8).
8. Remove coupling (13) from valve (14).
9. Remove four locknuts (3), screws (4), and two dummy couplings (5) from spare tire carrier (2). Discard locknuts (3).

b. Installation

1. Apply antiseize tape to male threads of hose (7), coupling (13), and adapter (10).
2. Install two dummy couplings (5) on spare tire carrier (2) with four screws (4) and new locknuts (3).
3. Install coupling (13) on valve (14).

8-26. TRAILER BRAKE COUPLINGS REPLACEMENT (Contd)

4. Install data plate (12) and valve (14), with coupling (13), on cable support (1) with new lockwasher (8) and nut (9).
5. Install adapter (10) on coupling (13).
6. Connect air tube (11) on adapter (10).
7. Install air coupling (6) on hose (7).
8. Connect hose (7) to valve (14).
9. Install two hoses (7) on cable support (1) with clamp (19), screw (20), new locknut (18), two straps (15), strap (17), screw (21), and new locknut (16).

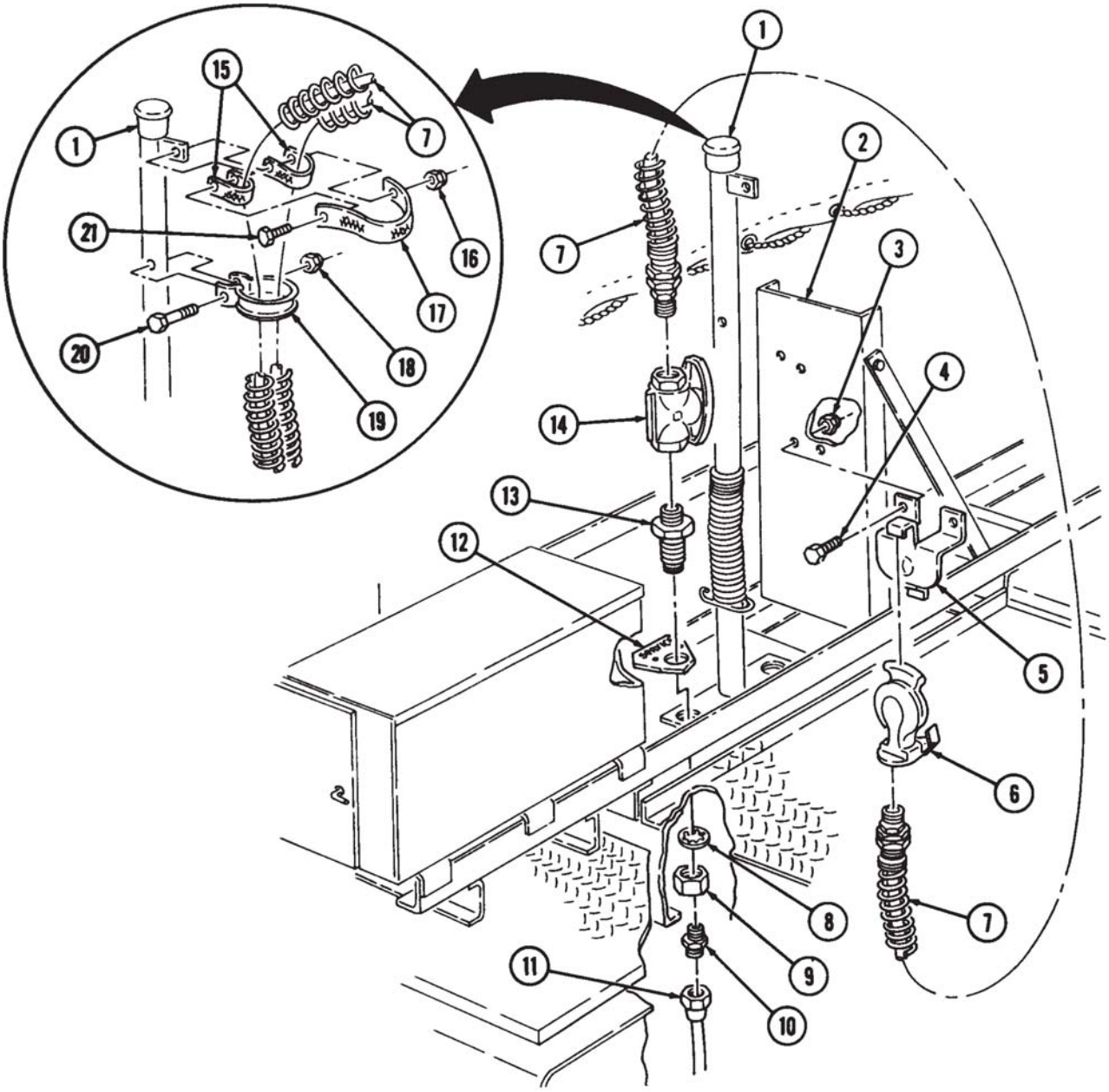

FOLLOW-ON TASK: Start engine (TM 9-2320-260-10), allow air pressure to build to normal operating pressure, and check for leaks.

CHAPTER 9
WHEELS, HUBS, DRUMS, AND STEERING SYSTEM MAINTENANCE

Section I. Wheels, Hubs, and Drums Maintenance (page 9-1)
Section II. Steering System Maintenance (page 9-21)

Section I. WHEELS, HUBS, AND DRUMS MAINTENANCE

9-1. WHEELS, HUBS, AND DRUMS MAINTENANCE INDEX

PARA NO.	TITLE	PAGE NO.
9-2.	Jacking and Supporting Vehicle	9-1
9-3.	Wheel, Tire, and Tube Maintenance	9-6
9-4.	Front Hub and Drum Maintenance	9-11
9-5.	Rear Hub and Drum Maintenance	9-16
9-6.	Wheel Bearing Adjustment	9-20

9-2. JACKING AND SUPPORTING VEHICLE

THIS TASK COVERS:

a. Chocking Wheels
b. Raising and Supporting Front Axle
c. Lowering Front Axle
d. Raising and Supporting Front Frame
e. Lowering Front Frame
f. Raising and Supporting Rear Axle(s)
g. Lowering Rear Axle(s)
h. Raising and Supporting Rear Frame
i. Lowering Rear Frame

INITIAL SETUP

APPLICABLE MODELS
All

REFERENCES (TM)
TM 9-2320-260-10
TM 9-2320-260-20P

EQUIPMENT CONDITION
Parking brake set (TM 9-2320-260-10).

GENERAL SAFETY INSTRUCTIONS
Do not work under vehicle that is supported by jack only.

9-2. JACKING AND SUPPORTING VEHICLE (Contd)

WARNING

Do not work under vehicle that is supported by jack only. Jack may slip, causing vehicle to fall, and result in injury or death to personnel.

a. Chocking Wheels

Place wood chocks (2) in front of and behind front wheels (1) or rear wheels (3) if not being raised.

b. Raising and Supporting Front Axle

1. Chock rear wheels (3) as necessary (task a).
2. Center hydraulic jack (5) under differential housing (6) and raise vehicle until front wheels (1) clear ground.
3. Place jack stands (4) under front axle (7) on each side. Adjust jack stands (4) to reduce lower ing distance.
4. Lower vehicle onto jack stands (4) and remove hydraulic jack (5).

c. Lowering Front Axle

1. Center hydraulic jack (5) under differential housing (6) and raise vehicle until weight is off jack stands (4).
2. Remove jack stands (4) from under vehicle.
3. Lower vehicle to ground and remove hydraulic jack (5).
4. Remove wood chocks (2) from rear wheels (3).

d. Raising and Supporting Front Frame

1. Raise and support front axle (7) (task b).
2. Remove front wheels (1) (para. 9-3).
3. Raise vehicle with hydraulic jack (5) to take weight off jack stands (4) and place jack stands (4) under frame (8), forward of spring brackets (9). Adjust jack stands (4) to reduce lowering distance.
4. Lower vehicle onto jack stands (4) and remove hydraulic jack (5).

e. Lowering Front Frame

1. Center hydraulic jack (5) under differential housing (6) and raise vehicle off jack stands (4).
2. Place jack stands (4) under front axle (7) on each side. Adjust jack stands (4) to reduce lowering distance.
3. Lower vehicle onto jack stands (4), but do not remove hydraulic jack (5).
4. Install front wheels (1) (para. 9-3).
5. Lower front axle (7) (task c).

9-2. JACKING AND SUPPORTING VEHICLE (Contd)

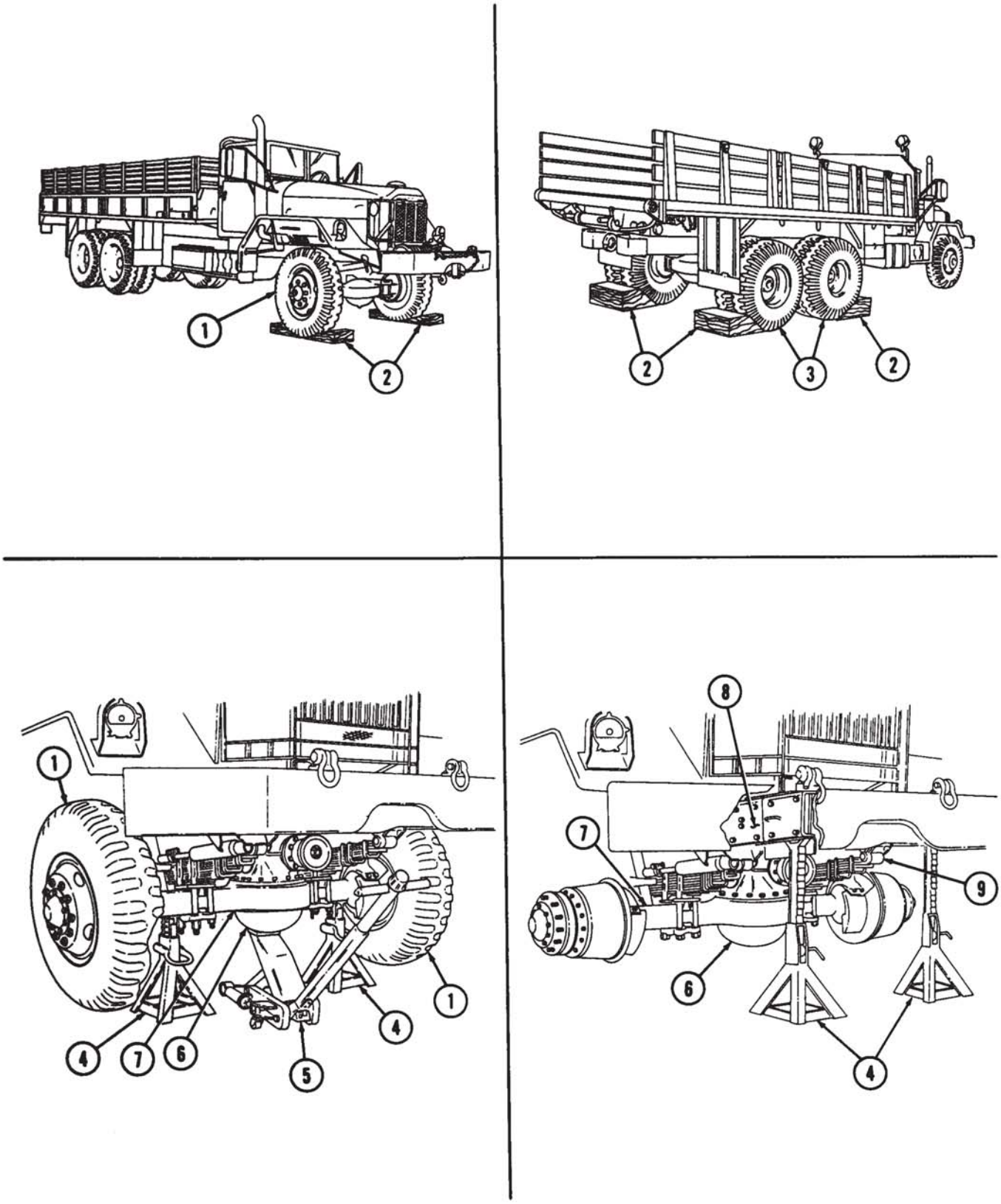

9-2. JACKING AND SUPPORTING VEHICLE (Contd)

f. Raising and Supporting Rear Axle(s)

NOTE

- The left and right rear axles are raised and supported the same way. This task covers the right rear axle only.
- Both rear axles must be supported when one axle is subject of repair.
- Perform task b if supporting entire vehicle at axles.

1. Chock front wheels as necessary (task a).
2. Center hydraulic jack (4) under bogie (6) and raise vehicle until rear wheels (3) clear ground.
3. Place jack stands (5) under spring brackets (1) on each side of rear axle (2). Adjust jack stands (5) to reduce lowering distance.
4. Lower vehicle onto jack stands (5) and remove hydraulic jack (4).

g. Lowering Rear Axle(s)

NOTE

The left and right rear axles are lowered the same way. This task covers the right rear axle only.

1. Center hydraulic jack (4) under bogie (6) and raise vehicle until weight is off jack stands (5).
2. Remove jack stands (5) from vehicle, lower vehicle to ground, and remove hydraulic jack (4).
3. Perform task c if front axle is raised, or remove chocks from front wheels as necessary.

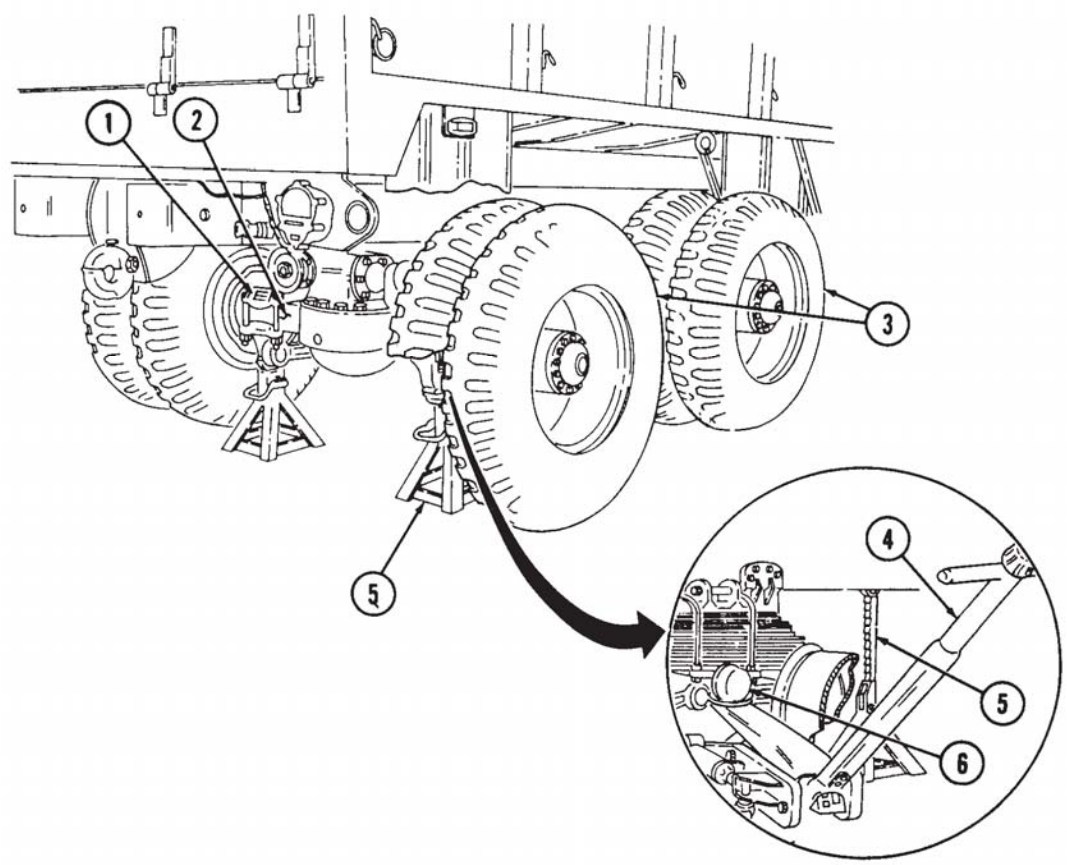

9-2. JACKING AND SUPPORTING VEHICLE (Contd)

h. Raising and Supporting Rear Frame

NOTE

Perform task d to support entire vehicle at frame.

1. Perform task f, but do not remove hydraulic jack (4).
2. Remove rear wheels (3) (para. 9-3).
3. Raise vehicle until weight is off jack stands (5) and place jack stands (5) under frame (7), in front of and behind spring brackets (8). Adjust jack stands (5) to reduce lowering distance.
4. Lower vehicle onto jack stands (5) and remove hydraulic jack (4).

i. Lowering Rear Frame

1. Center hydraulic jack (4) under bogie (6) and raise vehicle off jack stands (5).
2. Remove jack stands (5) from frame (7) and place under spring brackets (8). Adjust jack stands (5) to reduce lowering distance.
3. Lower vehicle onto jack stands (5), but do not remove hydraulic jack (4).
4. Install rear wheels (3) (para. 9-3).
5. Lower rear axles (2) (task g).
6. Perform task e if front flame is raised, or remove chocks from front wheels as necessary.

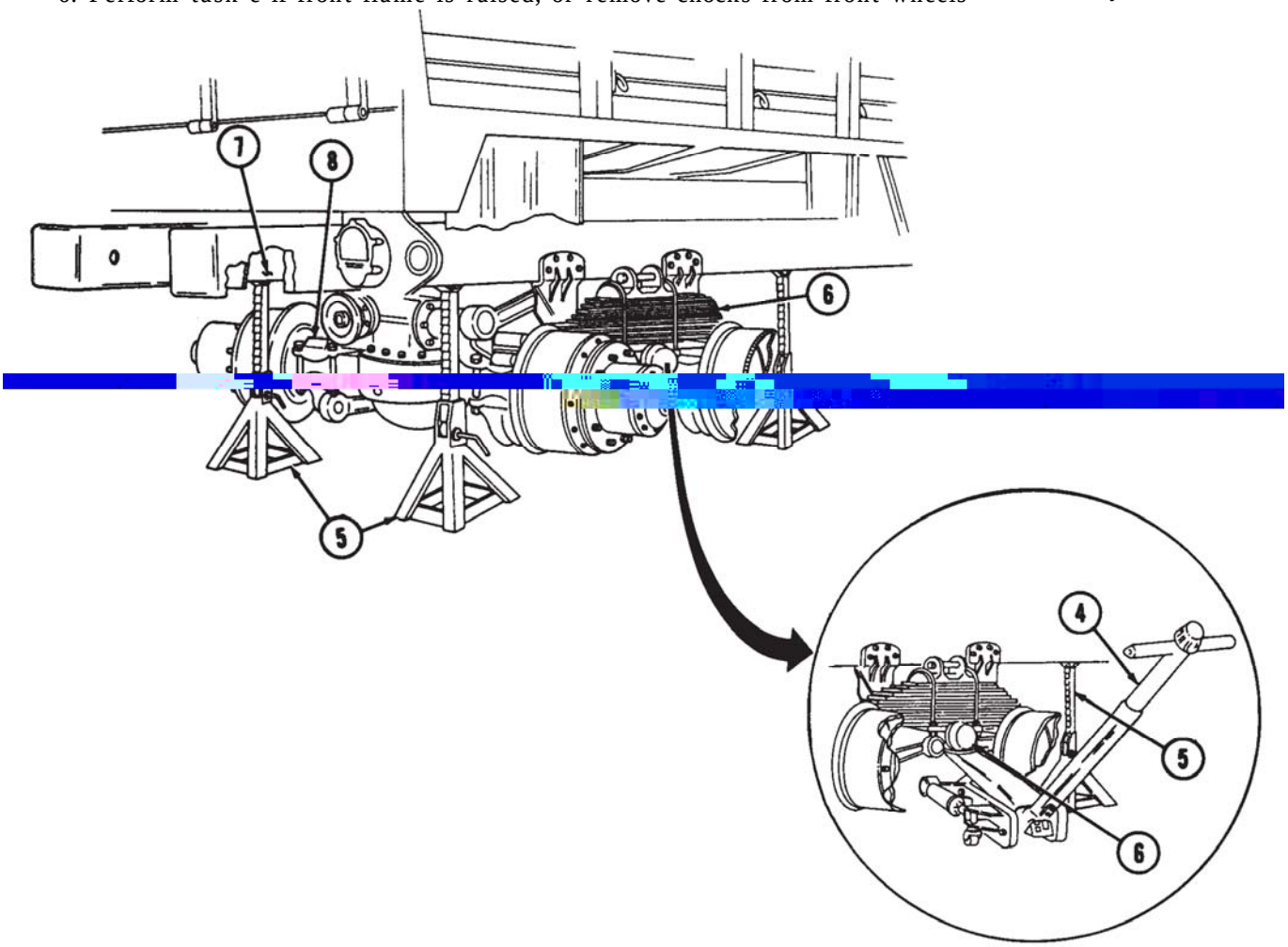

9-3. WHEEL, TIRE, AND TUBE MAINTENANCE

THIS TASK COVERS:

a. Wheel Removal
b. Tire and Tube Removal
c. Inspection
d. Tire and Tube Installation
e. Wheel Installation

INITIAL SETUP

APPLICABLE MODELS

All

MATERIAIS/PARTS

Ten capnuts

REFERENCES (TM)

TM 9-2320-260-10
TM 9-2320-260-20P
TM 9-2610-200-24

EQUIPMENT CONDITION

- Parking brake set (TM 9-2320-260-10).
- Wheels chocked (TM 9-2320-260-10).

GENERAL SAFETY INSTRUCTIONS

- Never remove tire lockring without first deflating tire.
- Never inflate tire with lockring facing personnel.
- Always use tire inflation cage.
- Never attempt to seat lockring by striking while tire is inflated.
- Always use tire inflation equipment specified in TM 9-2610-200-24. Warn personnel to stand clear of inflation cage.
- Completely deflate tires before removing from axles if there is obvious damage to wheel components.

a. Wheel Removal

WARNING

Completely deflate tires before removing from axles if there is obvious damage to wheel components. Injury or death to personnel may result from exploding wheel components.

NOTE

- Wheel stud nuts on left side have left-hand threads and must be turned to the right to loosen them. Wheel stud nuts on right side have right hand threads and must be turned to the left to loosen them. Studs and nuts are stamped (L) left and (R) right.
- Rear and front wheels are maintenance in the same way. This procedure covers rear wheels.

9-3. WHEEL, TIRE, AND TUBE MAINTENANCE (Contd)

1. Loosen ten wheel stud nuts (3) on wheel (2).
2. Raise and support rear axle (7) with jack stands (6).
3. Remove ten wheel stud nuts (3) from wheel (2).

CAUTION

Do not slide wheel on threaded studs. Sliding wheel may damage threads.

NOTE

Assistant will help with steps 4 and 5.

4. Remove wheel (2) from hub (5).

NOTE

To remove inner wheel, reverse wheel stud nut wrench, remove handle, and install near large end of wrench.

5. Remove ten wheel capnuts (4) and inner-rear wheel (1) from hub (5). Discard wheel capnuts (4).

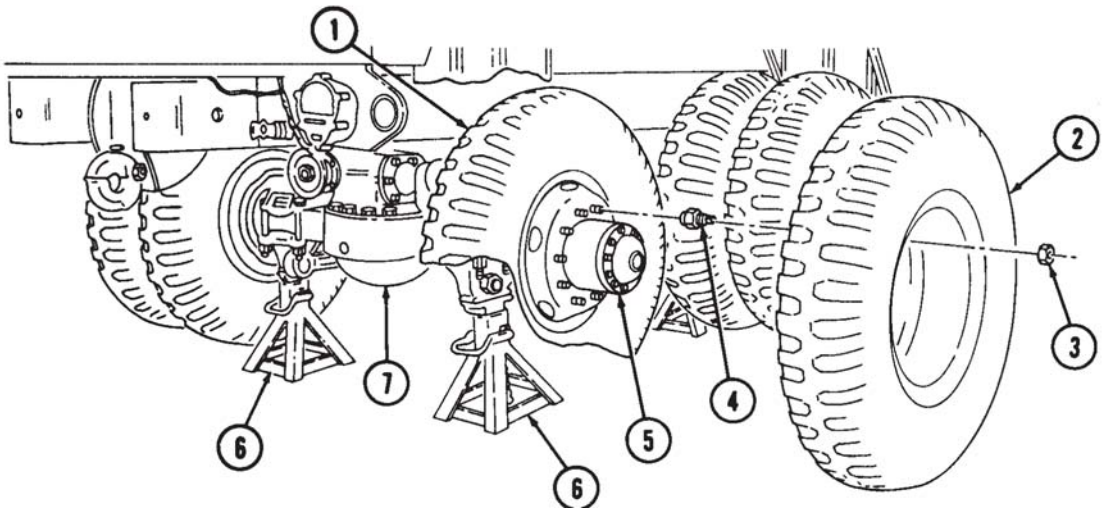

b. Tire and Tube Removal

1. Remove valve cap (9) from valve stem (8). Using valve cap (9), remove valve core (10) from valve stem (8) and release air from tire.

WARNING

Never remove tire lockring without first deflating tire. Lockring may explode off, causing injury or death to personnel.

NOTE

Put a soap and water solution on tire bead to help remove tire from rim.

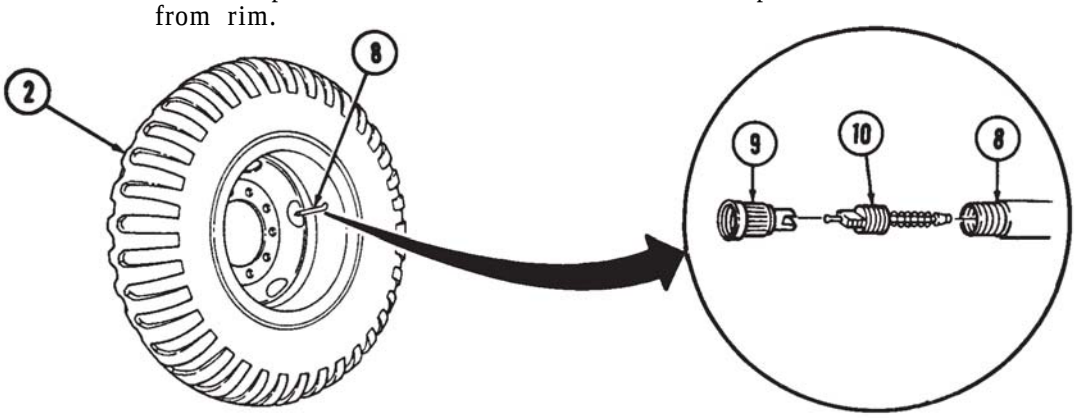

9-3. WHEEL, TIRE, AND TUBE MAINTENANCE (Contd)

2. Lay wheel (4) flat on side with lockring (6) facing upward and break tire bead (7) from lockring (6).

NOTE

Assistant will help with step 3.

3. Insert first tire iron (1) between lockring slit (2) and pry upward until lockring slot (3) is exposed.
4. Insert second tire iron (5) in lockring slot (3) and pry outward and upward.
5. Run first tire iron (1) completely around and remove lockring (6).

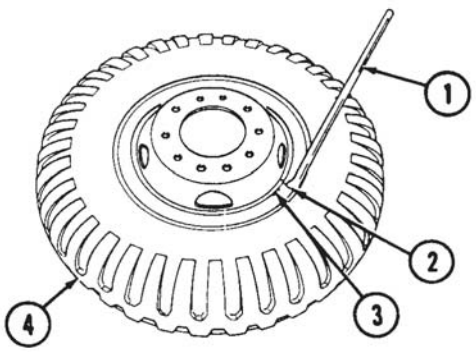

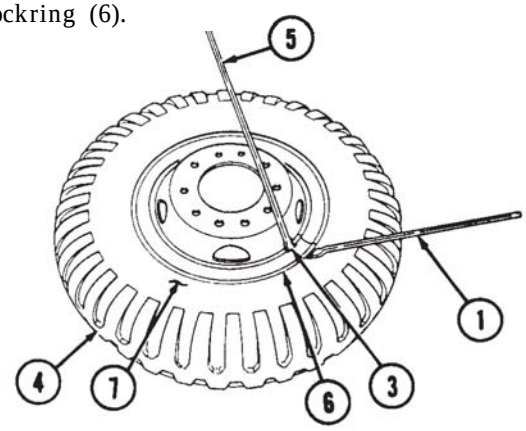

6. Turn wheel (4) over and break tire bead (7) on opposite side.
7. Remove rim (8), tire liner (11), and tube (10) from tire (9).

c. Inspection

1. Inspect rim (8) and lockring (6) for bends, cracks, breaks, distortion, pitting from corrosion, or stud holes are damaged. Replace rim (8) or lockring (6) if bent, cracked, broken, distorted, pitted from corrosion, or stud holes are damaged.
2. Inspect tire (9), tube (10), and tire liner (11) for excessive wear and damage. Replace tire (9), tube (10), or tire liner (11) if excessively worn or damaged.

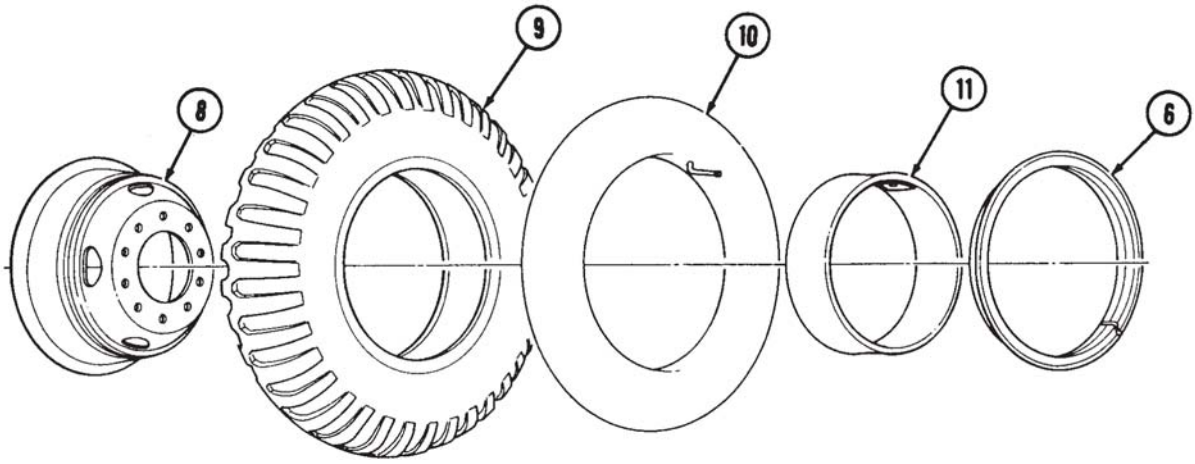

9-3. WHEEL, TIRE, AND TUBE MAINTENANCE (Contd)

d. Tire and Tube Installation

1. Using valve cap (15), install valve core (14) in valve stem (13).
2. Place tube (10) in tire (9) and inflate tube (10) enough to hold shape [do not exceed 3 psi (21 kpa)].
3. Install tire liner (11) over valve stem (13). Ensure tube (10) and tire liner (11) are straight and not pinched.
4. Install tire (9) and tube (10) on rim (8) and guide valve stem (13) through hole (12) in rim (8), and seat tire (9) firmly.

WARNING

- Lockring must be properly seated around wheel when installed. If lockring is not correctly installed, it may explode off when tire is inflated, causing injury or death to personnel.
- Never attempt to correct seating of lockring by hammering, striking, or forcing while tire is inflated. Lockring may explode off, causing injury or death to personnel.

5. Install lockring (6) into groove of rim (8).

WARNING

- Never inflate a tire without a tire inflation cage. Injury or death to personnel may result from exploding wheel components.
- Always use tire inflation equipment specified in TM 9-2610-200-24. Warn personnel to stand 10 ft (3.1 m) clear of tire inflation cage while inflating tire. Injury or death may result from exploding wheel components.
- Never rest or lean against tire inflation cage while tire is being inflated, or injury or death to personnel may result.

NOTE

Ensure tire inflation cage does not have cracked welds, cracked or bent components, or pitting from corrosion. If any of these are found, obtain new cage.

6. Inflate tire (9) (TM 9-2320-260-10) and install valve cap (15).
7. Inspect rim (8) and lockring (6) for proper seating while still in inflation cage. If further adjustment is required, deflate tire (9) completely before adjusting lockring (6).

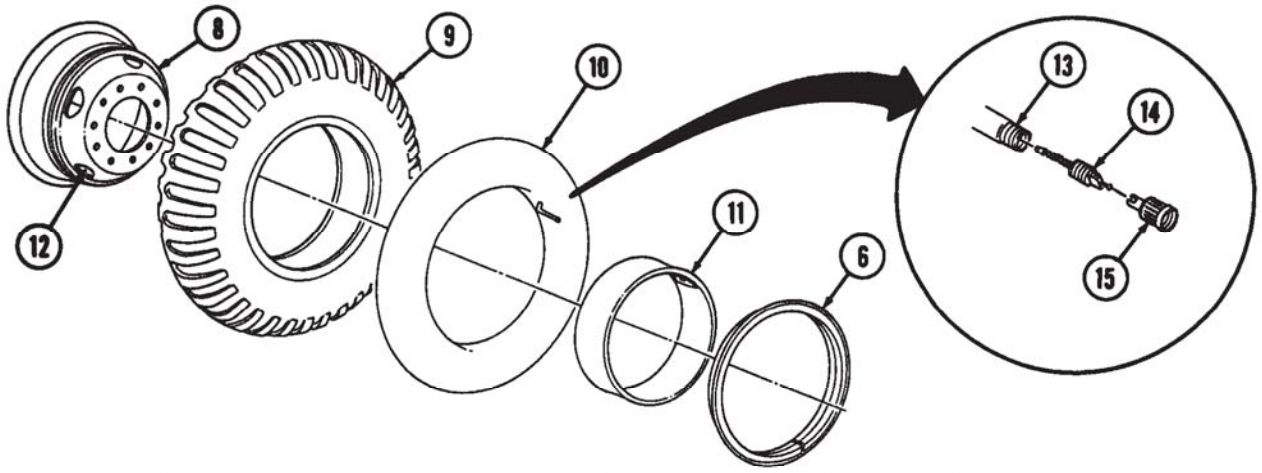

9-3. WHEEL, TIRE, AND TUBE MAINTENANCE (Contd)

e. Wheel Installation

CAUTION

When installing stud nuts, ensure the curved (ball seat) surface of the nut is toward the wheel to seat properly. Failure to do this may result in damage to wheel.

NOTE

- Wear of rear dual tires should be matched as closely as possible. Valve on rear tires must be opposite each other (180° apart). Ventilation holes in outer wheel should be directly alined with ventilation holes in inner wheel.
- Nuts have left-hand threads on left wheel assembly and right-hand threads on right wheel assembly. Studs and nuts are stamped (L) left and (R) right.
- Assistant will help with steps 1 and 3.
- If inner-rear wheel is being replaced, ensure inner stud nuts are properly seated.
- If inner-rear wheel is being installed, perform step 4. If outer-rear wheel or front wheel is being installed, go to step 5.

1. Position inner wheel (1) on hub (5) and install with ten new wheel capnuts (4). Tighten wheel capnuts (4) 450-500 lb-ft (610-678 N·m) in tightening sequence shown.
2. Position wheel (2) on hub (5) and wheel capnuts (4) and install with ten wheel stud nuts (3). On front wheel (9), ensure brake inspection plate (8) is visible through ventilation hole (10).
3. Remove jack stands (6) and lower rear axle (7) (para. 9-2).

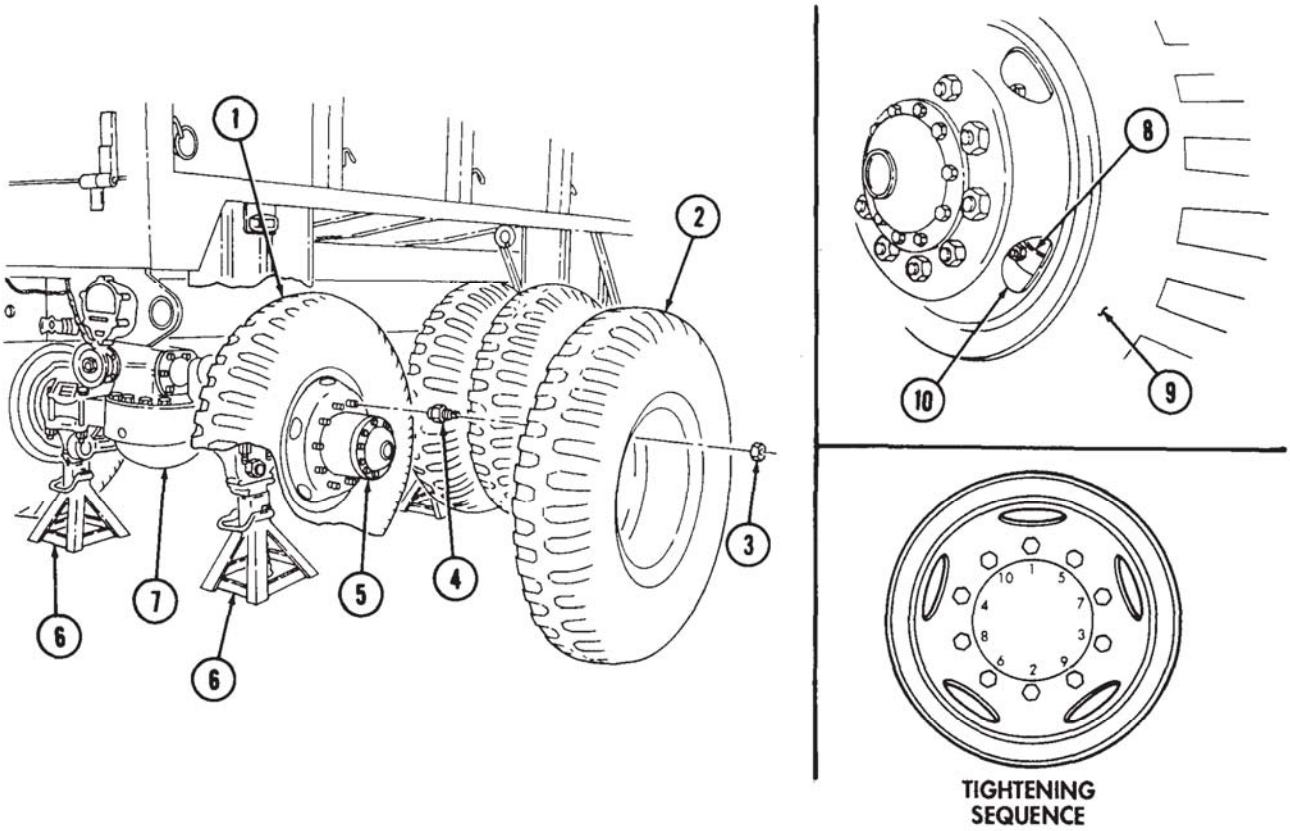

9-4. FRONT HUB AND DRUM MAINTENANCE

THIS TASK COVERS:

a. Removal
b. Cleaning and Inspection
c. Lubrication
d. Installation

INITIAL SETUP

APPLICABLE MODELS
All

MATERIALS/PARTS
Ten lockwashers
Ten capnuts
Grease seal
GM grease (Appendix C, Item 16)
Drycleaning solvent (Appendix C, Item 29)
Rags (Appendix C, Item 22)

PERSONNEL REQUIRED
Two

REFERENCES (TM)
LO 9-2320-260-12
TM 9-214
TM 9-2320-260-10
TM 9-2320-260-20P

EQUIPMENT CONDITION
- Parking brake set (TM 9-2320-260-10).
- Raise and support front axle (para. 9-2).
- Front wheels removed (para 9-3).
- Axle shaft flange removed (para. 7-10).

GENERAL SAFETY INSTRUCTIONS
Keep fire extinguisher nearby when using drycleaning solvent.

NOTE

The left and right front hub and drum assemblies are replaced the same way. This procedure covers the right front hub assembly.

a. Removal

1. Remove outer adjusting nut (1), adjusting nut washer (2), and inner adjusting nut (3) from spindle (6).
2. Pull drum (5), with outer bearing (4), out approximately 1 in. (25.4 mm). Push drum (5) back and remove outer bearing (4).

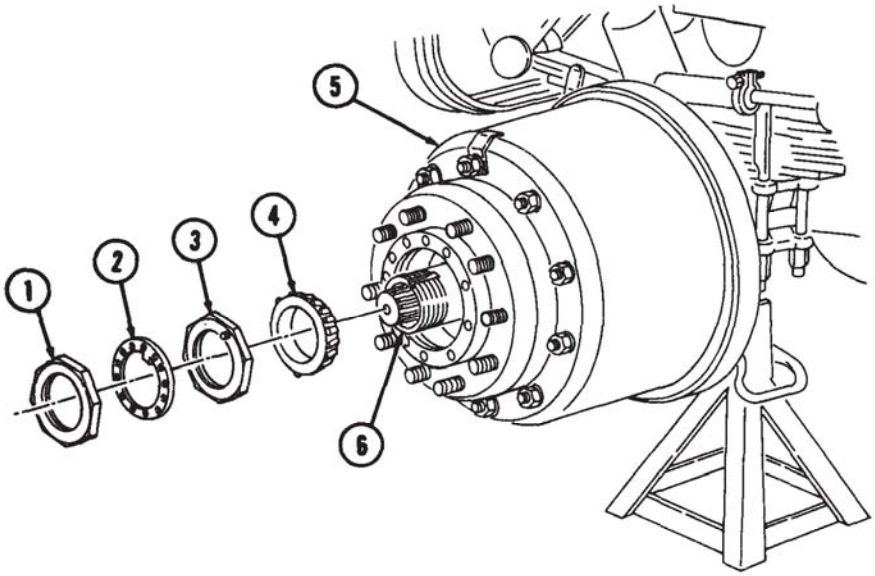

9-4. FRONT HUB AND DRUM MAINTENANCE (Contd)

NOTE

- Perform step 3 only if front wheel is equipped with spacers.
- Assistant will help with steps 4 through 6.
- It may be necessary to back off brake adjustment to remove drum (para. 8-9).

3. Remove ten capnuts (4) and spacer (1) from wheel studs (3) and drum (2). Discard capnuts (4).
4. Remove drum (15) from spindle (11).
5. Remove ten nuts (5), lockwashers (6), and inspection cover (7) from drum (15). Discard lockwashers (6).
6. Remove drum (15) from adapter (8).
7. Remove ten bolts (9), wheel studs (12), and adapter (8) from hub (14). Discard bolts (9) and wheel studs (12).
8. Remove inner bearing (13) and grease seal (10) from hub (14). Discard grease seal (10).

b. Cleaning and Inspection

WARNING

Drycleaning solvent is flammable and will not be used near open flame. Use only in well-ventilated places. Failure to do this may result in injury to personnel.

CAUTION

Do not use compressed air to dry bearings. Damage to bearings may result.

1. Clean all hub and drum components with drycleaning solvent and allow to air dry.
2. Inspect bearings (13) and (16) in accordance with TM 9-214. Replace bearings (13) and (16) and bearing cups (17) if either is damaged.
3. Inspect drum (15) for deep grooves, cracks, scores, and elongated holes. Replace drum (15) if cracked or holes are elongated. If drum (15) is grooved or scored, notify your supervisor.
4. Inspect adapter (8) for cracks, warpage, or elongated holes. Replace adapter (8) if cracked, warped, or holes are elongated.
5. Inspect bolts (9) and wheel studs (12) for breaks, bends, and damaged threads. Replace bolts (9) or wheel studs (12) if broken, bent, or thread damaged.
6. Inspect hub (14) for cracks, breaks, and scores. Replace hub (14) if cracked, broken, or scored.

NOTE

- Bearings and bearing cups must be replaced as a matched set.
- Perform steps 7 through 9 if bearings and bearing cups are to be replaced.

7. Using soft hammer and brass drift, remove two bearing cups (17) from hub (14). Discard bearing cups (17).
8. Inspect bores of hub (14) for scoring, grooves, and wear. Replace hub (14) if bore is scored, grooved, or worn.
9. Using arbor press, install new bearing cups (17) in hub (14). Ensure bearing cups (17) are seated properly.

9-4. FRONT HUB AND DRUM MAINTENANCE (Contd)

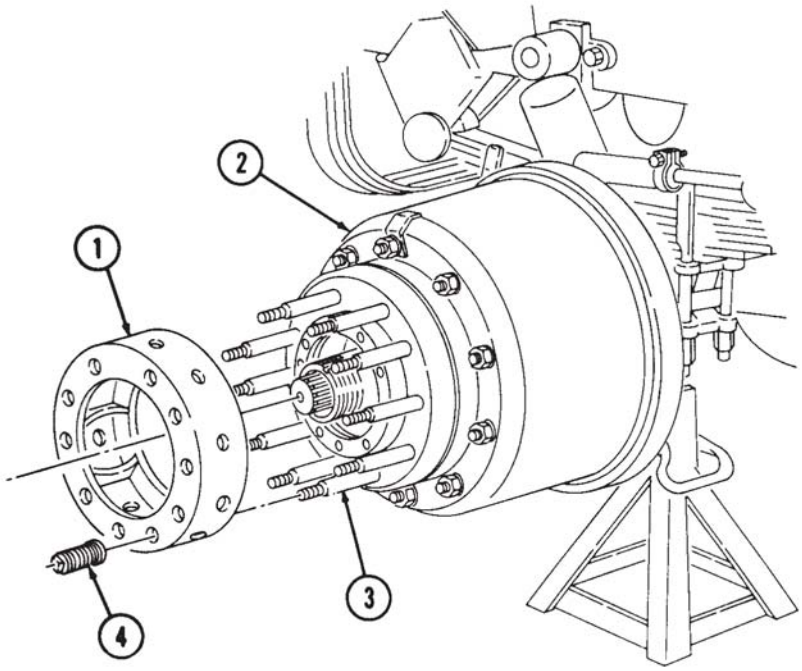

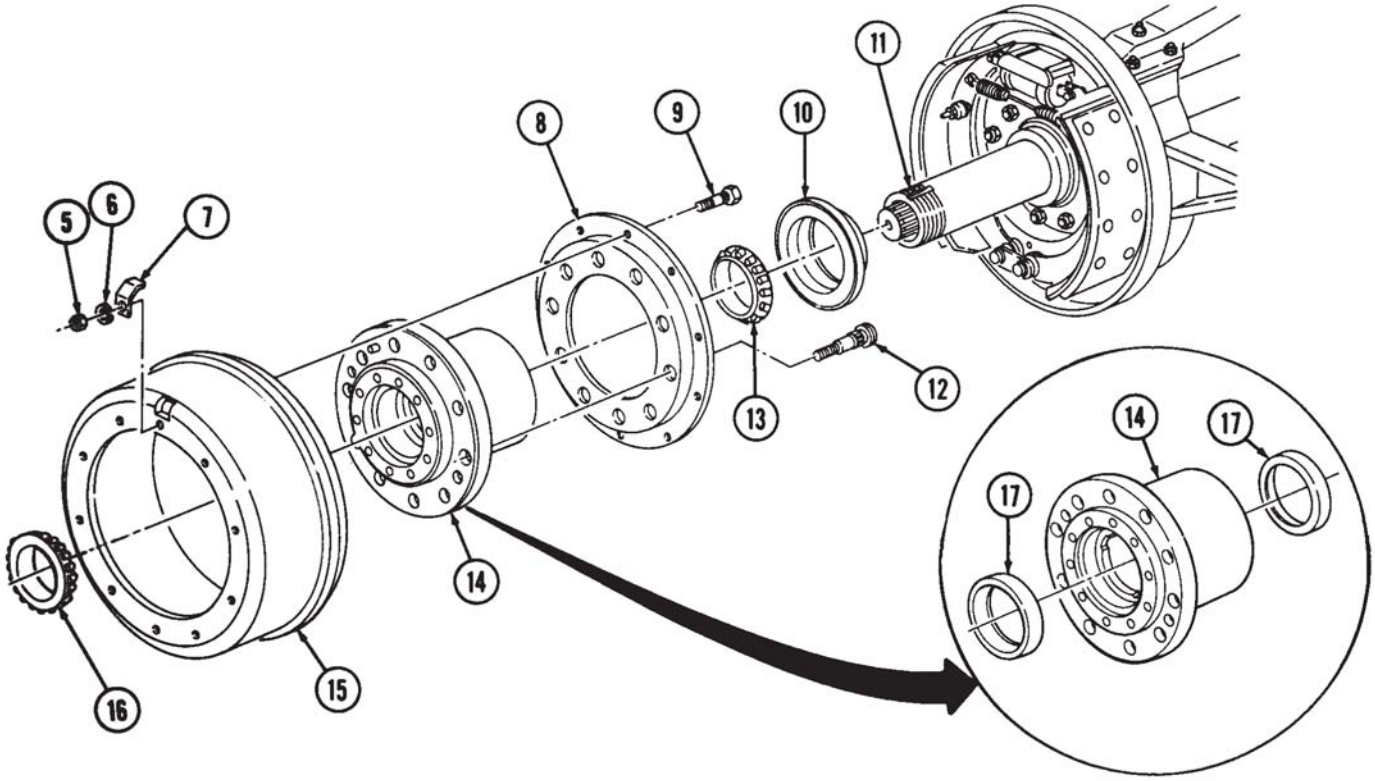

9-4. FRONT HUB AND DRUM MAINTENANCE (Contd)

c. Lubrication

1. Pack inner and outer bearings (7) and (17) with GAA grease (LO 9-2320-260-12).
2. Apply light coat of GAA grease to rubber section of new inner bearing grease seal (8) and bearing cups (12).

d. Installation

1. Install inner bearing (7) and new inner bearing grease seal (8) into hub (11).
2. Press ten new bolts (6) into adapter (5).
3. Press ten new wheel studs (10) through adapter (5) and into hub (11).
4. Aline holes and install drum (4) onto adapter (5) with inspection cover (3), ten new lockwashers (2), and nuts (1). Tighten nuts (1) 60-80 lb-ft (81-108 N•m).

CAUTION

Do not slide hub and drum assembly over threaded end of spindles. Damage to spindles may result.

NOTE

Assistant will help with steps 5 and 6.

5. Install hub (11) on spindle (9).

NOTE

Perform step 6 only if front wheel assembly is equipped with spacers.

6. Install spacer (13) onto drum (4) with ten capnuts (14). Tighten capnuts (14) 450-500 lb-ft (610-678 N•m).
7. Install outer bearing (17) on spindle (9).
8. Install adjusting nut (18) on spindle (9) and check brake adjustment (para. 8-9).
9. Install front wheels on axle (para. 9-3), but do not lower vehicle.
10. Install adjusting nut washer (16) and outer adjusting nut (15) on spindle (9).
11. Adjust wheel bearing (para. 9-6).

9-4. FRONT HUB AND DRUM MAINTENANCE (Contd)

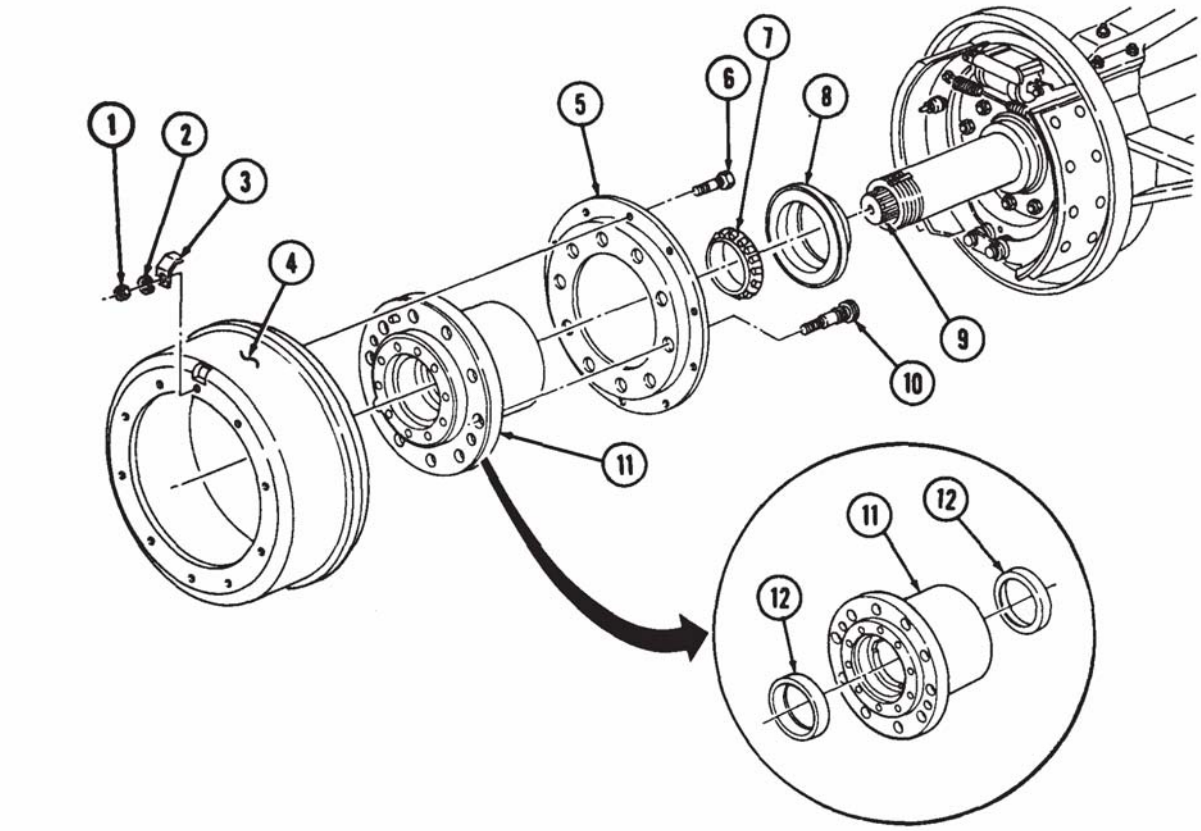

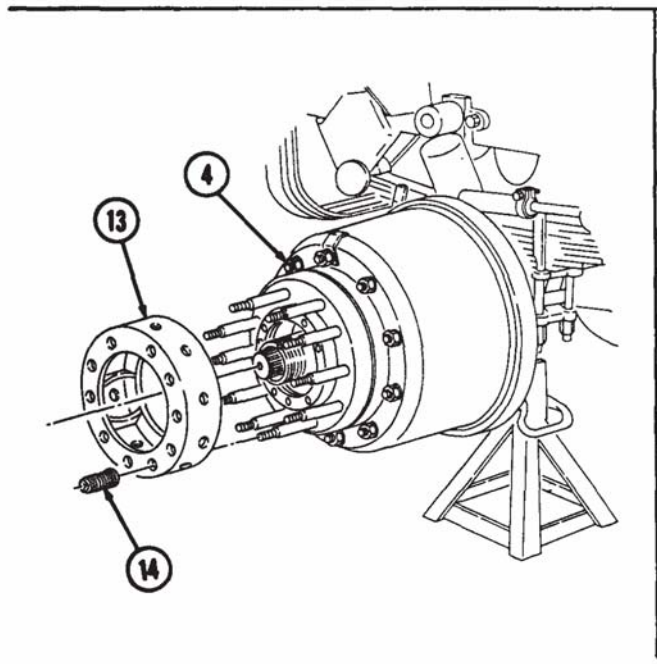

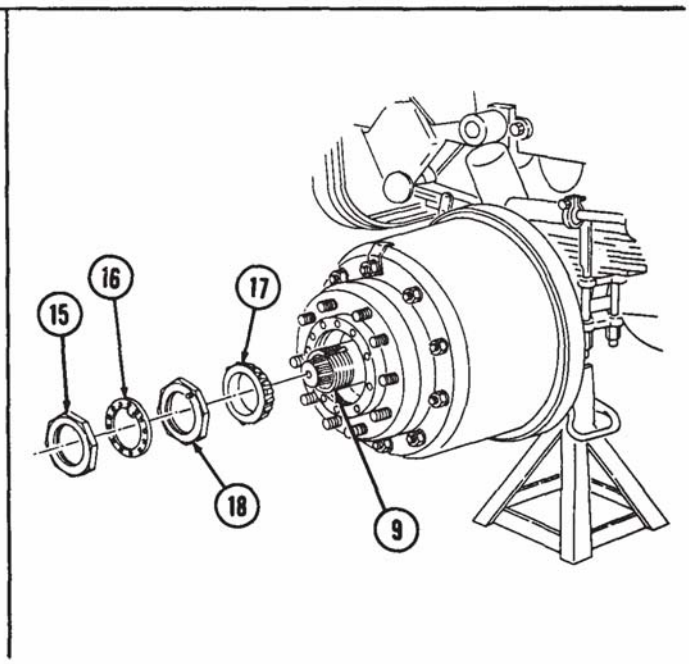

FOLLOW-ON TASKS:
- Install axle shaft flange (para. 7-10).
- Install front wheels (para. 9-3).
- Lower front axle (para. 9-2).

9-5. REAR HUB AND DRUM MAINTENANCE

THIS TASK COVERS:

a. Removal
b. Cleaning and Inspection
c. Lubrication
d. Installation

INITIAL SETUP

APPLICABLE MODELS
All

MATERIALS/PARTS
Ten wheel studs
Inner bearing seal
Cork gasket
Twenty lockwashers
Wiper
Safety wire (Appendix C, Item 34)
GAA grease (Appendix C, Item 16)
Drycleaning solvent (Appendix C, Item 29)
Rags (Appendix C, Item 22)

PERSONNEL REQUIRED
Two

REFERENCES (TM)
LO 9-2320-260-12
TM 9-2320-260-10
TM 9-2320-260-20P

EQUIPMENT CONDITION
- Parking brake set (TM 9-2320-260-10).
- Raise and support rear axles (para. 9-2).
- Wheels removed (para. 9-3).
- Rear axle shaft removed (para. 7-12).

GENERAL SAFETY INSTRUCTIONS
Keep fire extinguisher nearby when using drycleaning solvent.

a. Removal

1. Remove outer adjusting nut (1), adjusting nut washer (2), and inner adjusting nut (3) from spindle (6).
2. Remove outer grease seal (4) from hub (8).

NOTE

Service brakeshoes may need adjusting before service brakedrum can be removed (para. 8-9).

3. Pull hub (8) and drum (9) out approximately 1 in. (25.4 mm). Push hub (8) and drum (9) back and remove outer bearing (5) and cork gasket (7) from spindle keyway (10). Discard cork gasket (7).

CAUTION

Do not slide hub and drum assembly over threaded end of spindles. Damage to spindles may result.

4. Remove hub (8) and drum (9) from spindle (6).
5. Remove wiper (13), inner bearing grease seal (12), and inner bearing (11) from spindle (6). Discard grease seal (12) and wiper (13).
6. Remove ten nuts (15), lockwashers (16), and inspection cover (17) from drum (9). Discard lockwashers (16).
7. Remove ten bolts (20) and deflector (19) from drum (9).
8. Remove safety wire (21) from ten screws (22). Discard safety wire (21).

NOTE

Assistant will help with step 9.

9. Remove ten screws (22), lockwashers (23), adapter (18), and hub (8) from drum (9). Discard lockwashers (23).

9-5. REAR HUB AND DRUM MAINTENANCE (Contd)

NOTE

Perform step 10 for M821 models.

10. Remove ten wheel studs (25) and spacer (14) from hub (9). Discard wheel studs (25).
11. Remove ten wheel studs (24) from hub (9). Discard wheel studs (24).

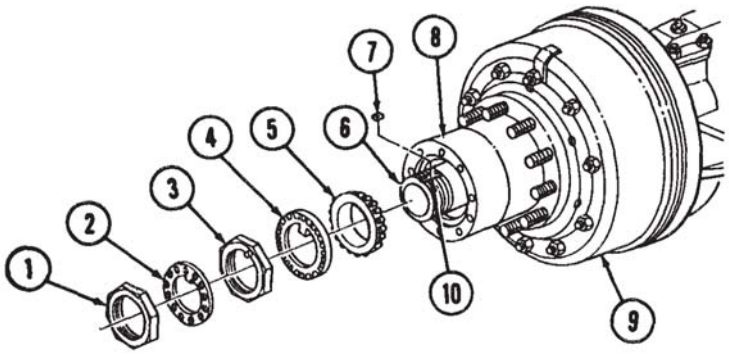

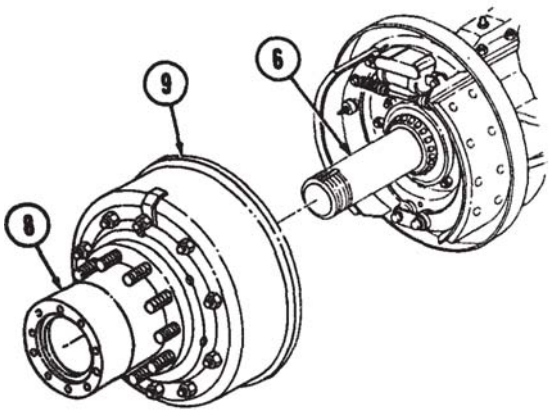

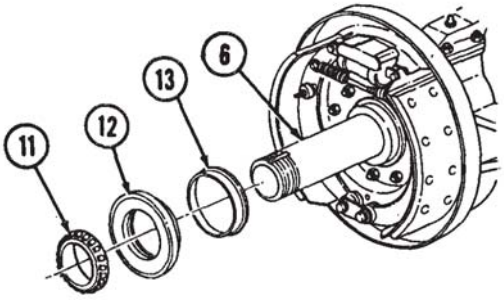

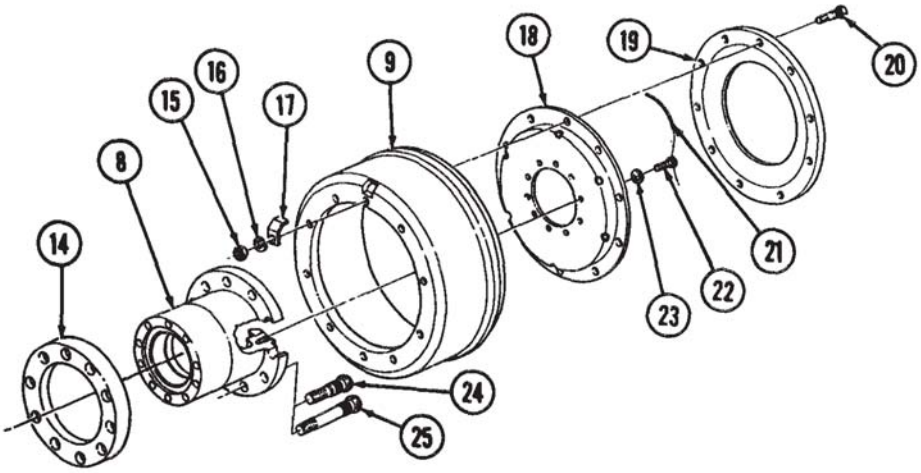

9-5. REAR HUB AND DRUM MAINTENANCE (Contd)

b. Cleaning and Inspection

WARNING

Drycleaning solvent is flammable and will not be used near open flame. Use only in well-ventilated places. Failure to do so may result in injury to personnel.

CAUTION

Do not use compressed air to dry bearings. Damage to bearings may result.

1. Clean all hub and drum components with drycleaning solvent and allow to air dry.
2. Inspect drum (8) for deep grooves, cracks, scores, and elongated holes. Replace drum (8) if cracked or holes are elongated. Notify your supervisor if drum (8) is grooved or scored.
3. Inspect adapter (9), deflector (10), and spacer (4) (if so equipped) for cracks, warpage, or elongated holes. Replace adapter (9), deflector (10), or spacer (4) if cracked, warped, or holes are elongated.
4. Inspect bolts (11) and studs (15) for breaks, bends, and damaged threads. Replace bolts (11) or studs (15) if broken, bent, or threads are damaged.
5. Inspect hub (2) for cracks, breaks, and scores. Replace hub (2) if cracked, broken, or scored.

NOTE

- Bearings and bearing cups must be replaced as a matched set.
- Perform steps 7 through 9 if hearings and bearing cups are to be replaced.

6. Inspect bearings (16) and (24) and bearing cups (1) and (3) for damage. Replace bearing(s) (16) and (24) and bearing cup(s) (1) and (3) if damaged.
7. Using soft hammer and brass drift, remove bearing cups (1) and (3) from hub (2). Discard bearing cups (1) and (3).
8. Inspect bore of hub (2) for scores, grooves, and wear. Replace hub (2) if bore is scored, grooved, or worn.
9. Using arbor press, install new bearing cups (1) and (3) in hub (2). Ensure bearing cups (1) and (3) are seated properly.

c. Lubrication

1. Pack inner and outer bearings (16) and (24) with GAA grease (LO 9-2320-260-12).
2. Apply light coat of GAA grease to rubber section of new inner bearing seal (17) and inner and outer bearing cups (3) and (1).

d. Installation

1. Install ten wheel studs (15) in hub (2).

NOTE

- Perform step 2 on M821 models.
- Assistant will help with step 3.

2. Install ten wheel studs (15) and spacer (4) on hub (2).
3. Aline and install drum (8) and adapter (9) on hub (2) with ten new lockwashers (14) and screws (13). Tighten screws (13) 81-104 lb-ft (110-141 N•m).
4. Install safety wire (12) through screws (13).
5. Install deflector (10) on adapter (9) and drum (8) with ten bolts (11).

9-5. REAR HUB AND DRUM MAINTENANCE (Contd)

6. Install inspection cover (7), ten new lockwashers (6), and nuts (5) on drum (8). Tighten nuts (5) 48-61 lb-ft (65-83 N•m).
7. Install new wiper (18), inner bearing (16), and new inner grease seal (17) on spindle (19).

CAUTION

Do not slide hub and drum assembly over threaded end of spindles. Damage to spindles may result.

NOTE

Assistant will help with step 8.

8. Install hub (2), drum (8), and spacer (4) (if equipped) on spindle (19).
9. Install new cork gasket (26) in spindle keyway (25).
10. Install outer bearing (24) on spindle (19).
11. Install outer grease seal (23) in hub (2).
12. Install inner adjusting nut (22) on spindle (19) and check brake adjustment (para. 8-9).
13. Install rear wheels on axles (para. 9-3), but do not lower vehicle.
14. Install adjusting nut washer (21) and outer adjusting nut (20) on spindle (19).
15. Adjust bearings (16) and (24) (para. 9-6).

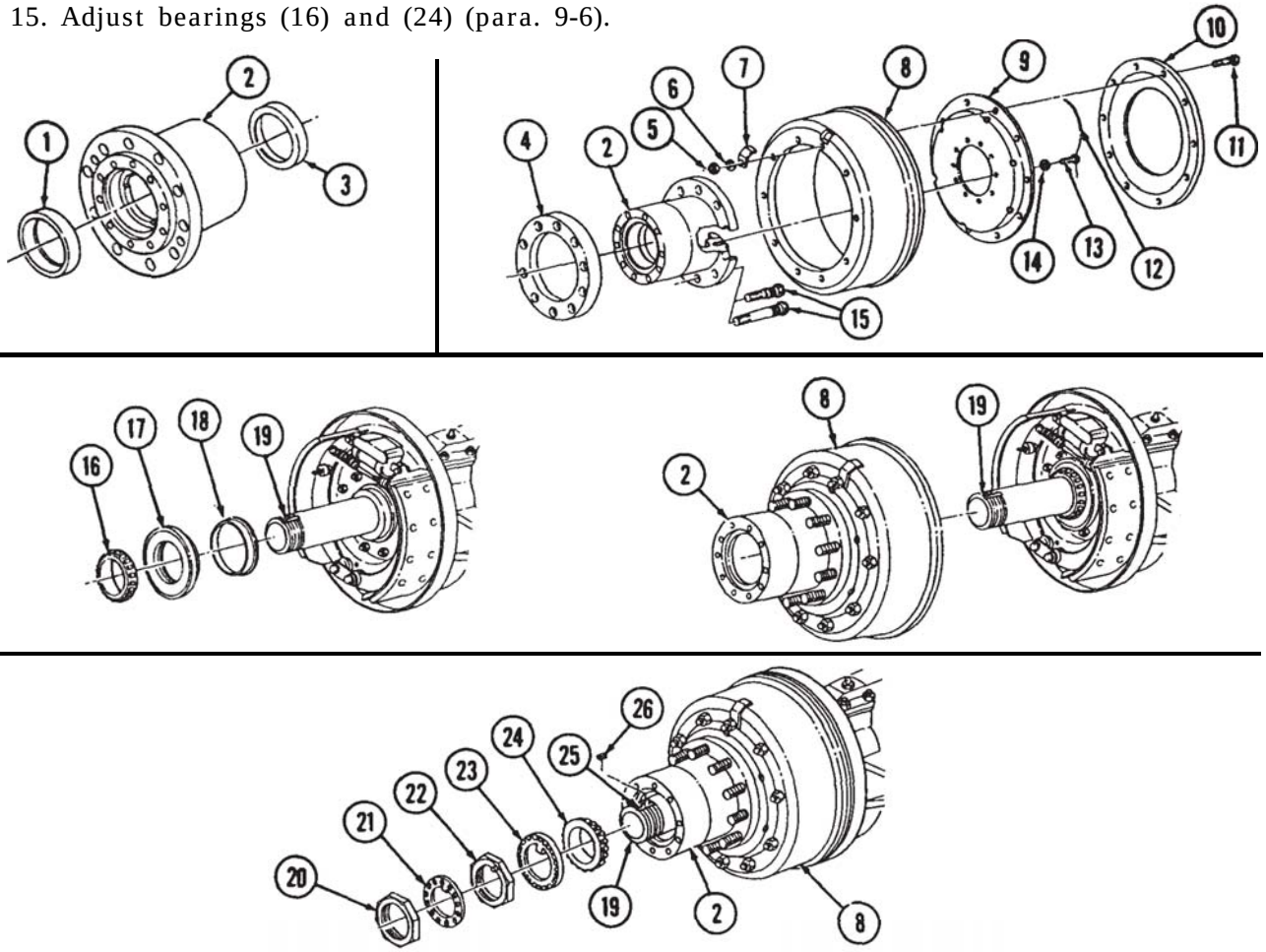

FOLLOW-ON TASKS:
- Install rear axle shaft (para. 7-12).
- Install wheels (para. 9-3).
- Lower rear axles (para. 9-2).

9-6. WHEEL BEARING ADJUSTMENT

THIS TASK COVERS:

Wheel Bearing Adjustment

INITIAL SETUP

APPLICABLE MODELS

All

REFERENCES (TM)

TM 9-2320-260-10
TM 9-2320-260-20P

EQUIPMENT CONDITION

- Parking brake set (TM 9-2320-260-10).
- Raise and support axes (para. 9-2).
- Front axle shaft flange removed (para. 7-10).
- Rear axle shafts removed (para. 7-12).

Wheel Bearing Adjustment

NOTE

- Wheel must turn freely prior to wheel bearing adjustment.
- Adjustment procedure for front and rear wheel bearings are the same. This procedure covers the rear wheel bearings.
- Inner and outer adjusting nut torque values are the same for all wheels.
- Wheels must be rotated in both directions to correctly position wheel bearings.

1. Remove outer adjusting nut (1) and adjusting nut washer (2).
2. Continuously turn wheel (3) while tightening inner adjusting nut (4) 50 lb-ft (68 N•m), then back off inner adjusting nut (4) 1/4- to 1/3-turn.
3. Install adjusting nut washer (2) and adjusting nut (1). Tighten outer adjusting nut (1) 250-400 lb-ft (339-542 N•m).

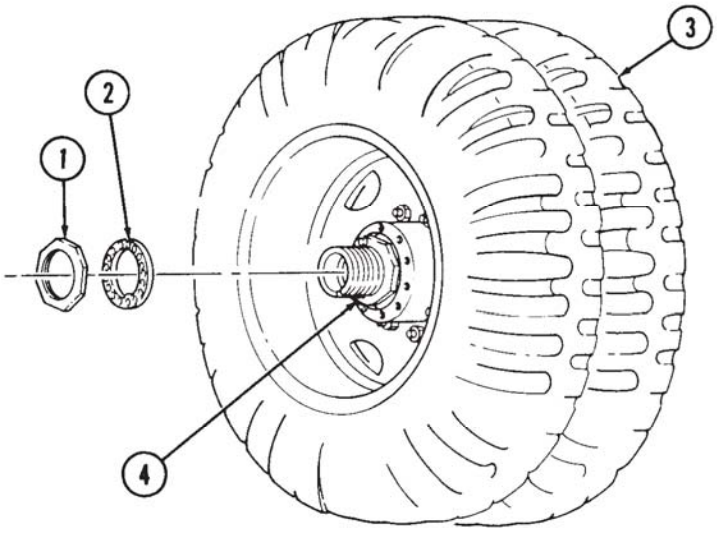

FOLLOW-ON TASKS:
- Install rear axle shafts (para. 7-12).
- Install front axle shaft flange (para. 7-10).
- Lower axles (para. 9-2).

Section II. STEERING SYSTEM MAINTENANCE

9-7. STEERING SYSTEM MAINTENANCE INDEX

PARA NO.	TITLE	PAGE NO.
9-8.	Toe-In Check and Adjustment	9-21
9-9.	Tie Rod End Maintenance	9-24
9-10.	Power Steering Assist Cylinder and Socket Maintenance	9-26
9-11.	Pitman Arm Replacement	9-30
9-12.	Drag Link Replacement	9-32
9-13.	Steering Wheel Replacement	9-34
9-14.	Steering Column Propeller Shaft Replacement	9-36
9-15.	Steering Column Replacement	9-38
9-16.	Power Steering Pump Drivebelts Maintenance	9-40
9-17.	Power Steering Pump Maintenance	9-42
9-18.	Power Steering Pump Hoses Replacement	9-44
9-19.	Power Steering Gear-to-Assist Cylinder Tubes Replacement	9-46
9-20.	Power Steering Assist Cylinder Hoses Replacement	9-48

9-8. TOE-IN CHECK AND ADJUSTMENT

THIS TASK COVERS:

a. Toe-In Check **b. Toe-in Adjustment**

INITIAL SETUP

APPLICABLE MODELS
All

PERSONNEL REQUIRED
Two

REFERENCES (TM)
TM 9-2320-260-10
TM 9-2320-260-20P

EQUIPMENT CONDITION
- Parking brake set (TM 9-2320-260-10).
- Tires inflated to proper pressure and check for uniform wear (TM 9-2320-260-10).
- Wheel bearings adjusted properly (para. 9-6).

9-8. TOE-IN CHECK AND ADJUSTMENT (Contd)

a. Toe-In Check

NOTE

- Vehicle must be on level surface to perform this procedure.
- Ensure that all steering components are tight. Replace any damaged steering components and tighten any loose components.
- Steps 1 through 3 will determine centerline of tire.
- "Point of measurement" for checking toe-in is intersection of lines marked in steps 1 and 3.
- Ensure tires are in straight-ahead position.

1. Mark line (1) on center tread (2) of tire 20.75 in. (52.71 cm) from ground.
2. Measure total width of tire tread (4) and record.
3. Mark line (5) on center tread (4) and record. The intersection of lines (1) and (5) is the point of measurement "A."
4. Repeat steps 1 through 3 for opposite tire. The intersection of the two lines is point of measurement "B."
5. Measure distance between points "A" and "B" on front side of tires (3) and record.
6. Rotate tires (3) by moving vehicle forward until points "A" and "B" are 20.75 in. (52.71 cm) above the ground at rear side of tires (3).
7. Measure distance between points "A" and "B" on rear side of tires (3) and record.

NOTE

- If measurement of front side of tires is greater than measurement of rear side of tires, tires have toe-out.
- If toe-in alinement does not meet specifications, repeat procedure to eliminate any possible reading errors.

8. Subtract measurement of front side of tires (3) (step 5) from measurement of rear side of tires (3) (step 7). The difference between these two measurements represents inches of toe-in. Correct toe-in is 0.13 in. ± 0.06 in. (3.2 mm ± 1.6 mm).

b. Toe-In Adjustment

1. Loosen two nuts (7) at each end of tie rod (6).
2. Turn tie rod (6) in one-half turn increments and measure toe-in until toe-in of 0.13 in. ± 0.06 in. (3.2 mm ± 1.6 mm) is obtained.
3. When correct toe-in is obtained, tighten nuts (7) 40-55 lb-ft (54-75 N·m).

9-8. TOE-IN CHECK AND ADJUSTMENT (Contd)

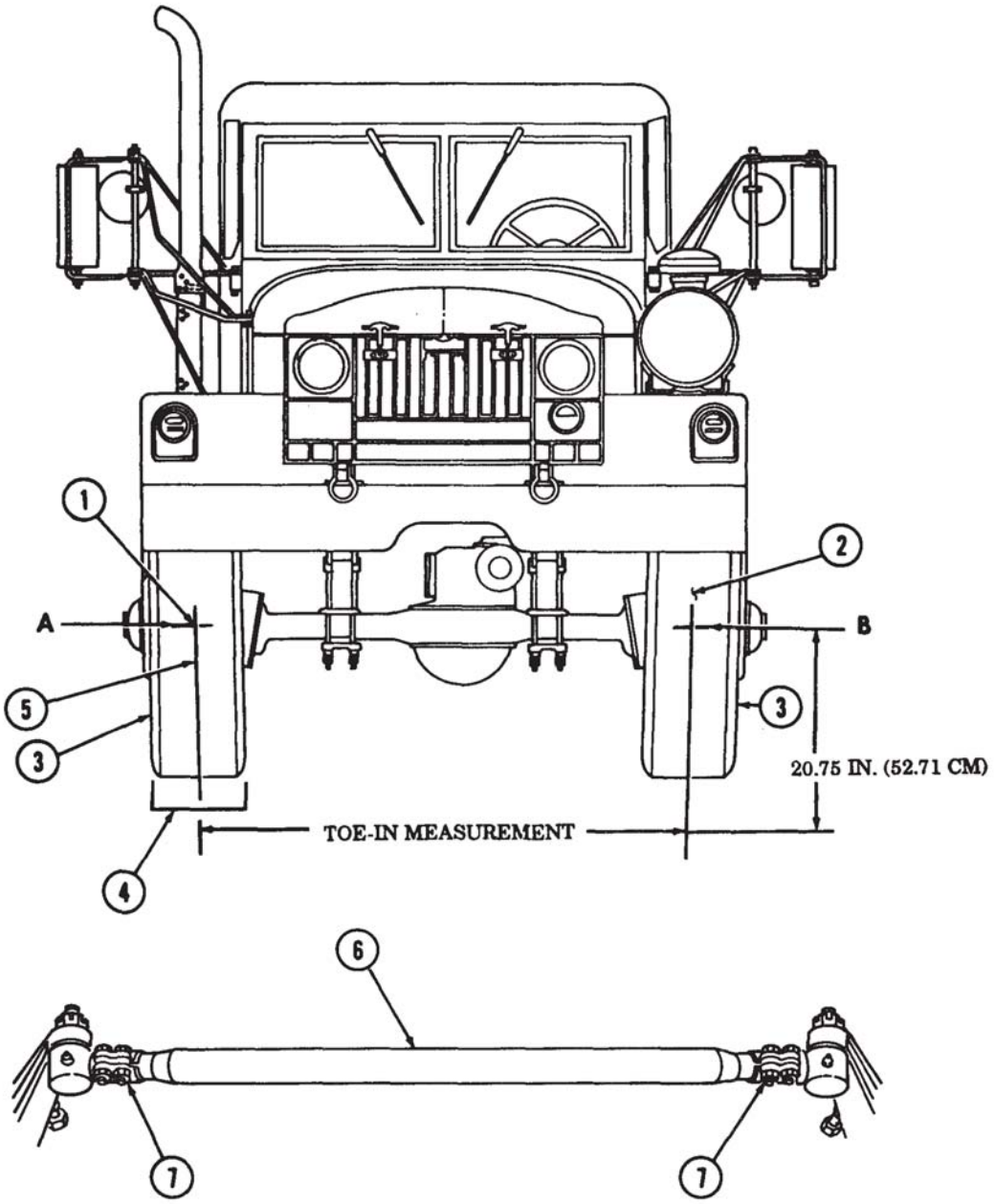

9-9. TIE ROD END MAINTENANCE

THIS TASK COVERS:

a. Removal
b. Inspection
c. Installation

INITIAL SETUP

APPLICABLE MODELS
All

MATERIALS/PARTS
Cotter pin
Two lockwashers

REFERENCES (TM)
LO 9-2320-260-12
TM 9-2320-260-10
TM 9-2320-260-20P

EQUIPMENT CONDITION
- Parking brake set (TM 9-2320-260-10).
- Rear wheels chocked (para. 9-2).

a. Removal

1. Raise front axle enough to take weight off front wheels (para. 9-2).
2. Remove cotter pin (1) and nut (10) from tie rod end (8). Discard cotter pin (1).
3. Remove tie rod end (8) from steering knuckle (9).
4. Remove two nuts (6), lockwashers (5), and screws (2) from tie rod end clamp (4). Discard lockwashers (5).

NOTE

- Left tie rod end has left-hand threads. Right tie rod end has right-hand threads.
- Count and record number of turns required to remove tie rod end from tie rod.

5. Remove tie rod end (8) from tie rod (3).
6. Remove grease fitting (7) from tie rod end (8).

b. Inspection

Inspect tie rod (3) for bends and damaged threads. Replace tie rod (3) if bent or threads are damaged.

c. Installation

NOTE

Left tie rod end has left-hand threads. Right tie rod end has right-hand threads.

1. Install grease fitting (7) on tie rod end (8).
2. Install tie rod end (8) onto tie rod (3) with the same number of turns recorded in task a.
3. Install two screws (2), new lockwashers (5), and nuts (6) on tie rod end clamp (4). Do not tighten nuts (6).
4. Install tie rod end (8) on steering knuckle (9) with nut (10). Tighten nut (10) 140-180 lb-ft (190-244 N•m).
5. Install new cotter pin (1) through nut (10).
6. Tighten two nuts (6) 40-55 lb-ft (54-75 N-m).

9-9. TIE ROD END MAINTENANCE (Contd)

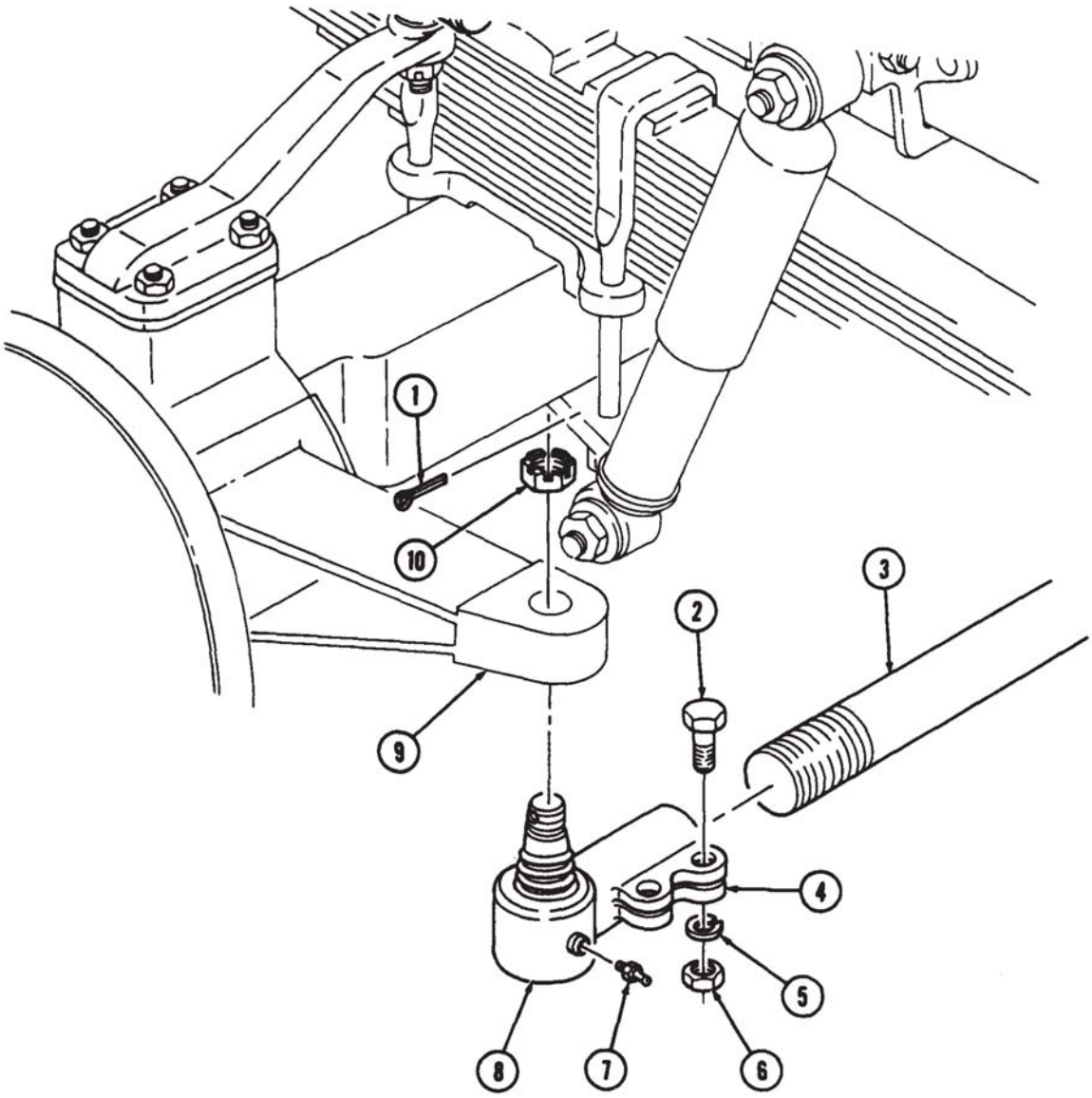

FOLLOW-ON TASKS: • Lubricate tie rod ends (LO 9-2320-260-12).
• Check toe-in (para. 9-8).

9-10. POWER STEERING ASSIST CYLINDER AND SOCKET MAINTENANCE

THIS TASK COVERS:

a. Removal
b. Disassembly
c. Assembly
d. Installation
e. On-Vehicle Adjustment

INITIAL SETUP

APPLICABLE MODELS
All

MATERIALS/PARTS
Two dust shields
Two felt pads
Two cotter pins
Two ball seats
Spring
Backup ring
Cap and plug set (Appendix C, Item 9)
Rags (Appendix C, Item 22)
Antiseize tape (Appendix C, Item 30)

REFERENCES (TM)
LO 9-2320-260-12
TM 9-2320-260-10
TM 9-2320-260-20P

EQUIPMENT CONDITION
- Parking brake set (TM 9-2320-260-10).
- Wheels in straight-ahead position (TM 9-2320-260-10).
- Power steering assist cylinder stone shield removed (para. 11-26).
- Power steering reservoir drained (LO 9-2320-260-12).

a. Removal

CAUTION

Cap or plug all open hydraulic lines, fittings, and parts to prevent dirt contamination from entering system. Prior to installation, ensure all caps and plugs are removed. Failure to do so may result in damage to internal components.

NOTE

- Tag hydraulic lines and parts for installation.
- Have drainage container ready to catch hydraulic fluid.

1. Disconnect two hoses (7) from two elbows (8) on power steering assist cylinder (14).
2. Unhook and open tabs on dust shield (10) on power steering assist cylinder (14).
3. Remove cotter pin (13) and loosen adjusting plug (12). Discard cotter pin (13).
4. Remove power steering assist cylinder (14) from spring shackle ball stud (9).
5. Remove felt pad (11) and dust shield (10) from spring shackle ball stud (9). Discard felt pad (9) and dust shield (10).
6. Unhook and open tabs on dust shield (15) on tie rod end socket (4).
7. Remove cotter pin (3) and loosen adjusting cap (2). Discard cotter pin (3).
8. Remove tie rod end socket (4) from steering arm (5).
9. Remove felt pad (16) and dust shield (15) from steering arm ball stud (6). Discard felt pad (16) and dust shield (15).
10. Remove two elbows (8) from power steering assist cylinder (14).
11. Remove two grease fittings (1) from power steering assist cylinder (14).

9-10. POWER STEERING ASSIST CYLINDER AND SOCKET MAINTENANCE (Contd)

b. Disassembly

1. Remove nut (25), washer (24), screw (21), and clamp (22) from tie rod end socket (4).
2. Remove tie rod end socket (4) from piston rod (23).
3. Remove adjusting cap (2), two ball seats (17) and (18), spring (19), and backup ring (20) from tie rod end socket (4). Discard ball seats (17) and (18), spring (19), and backup ring (20).
4. Wipe all parts clean with rag.

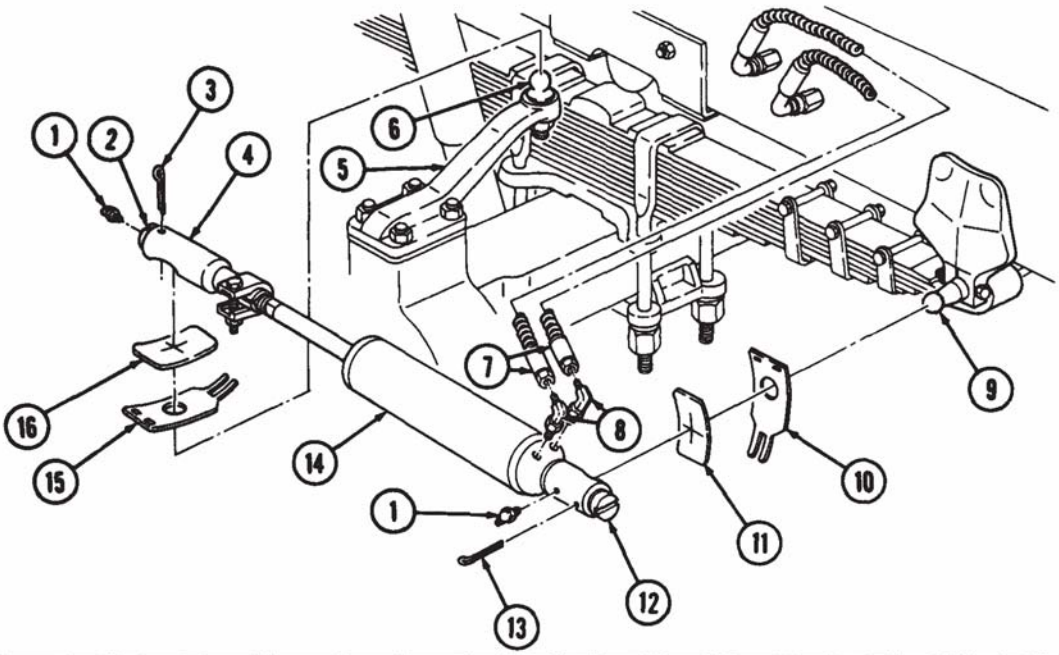

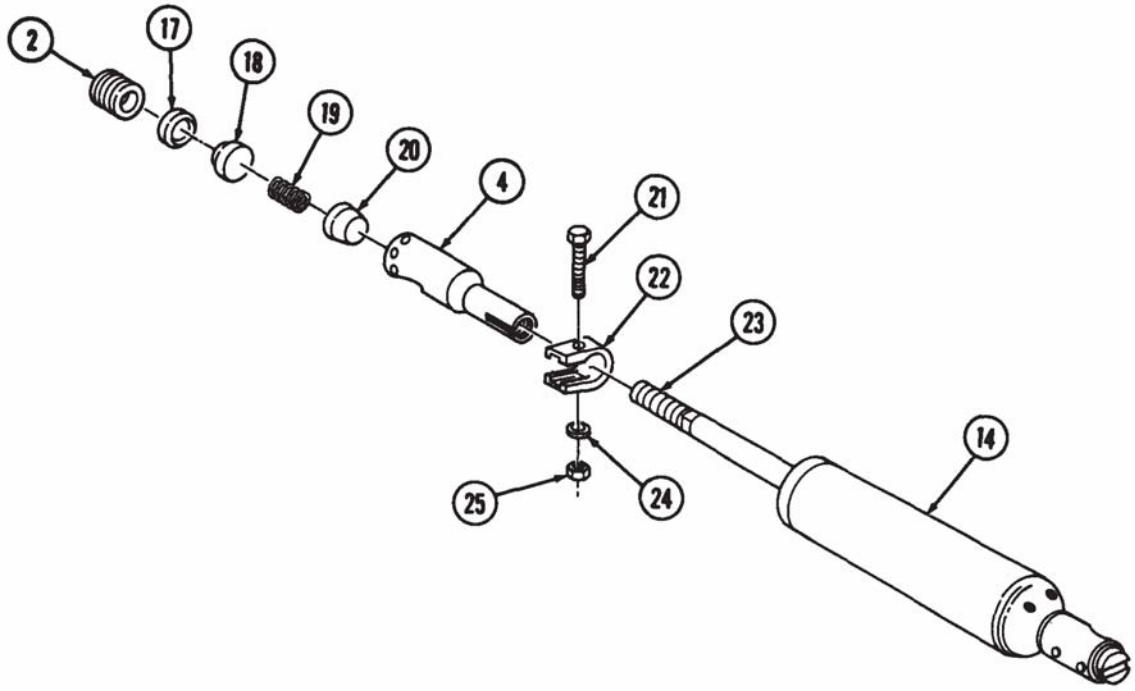

9-10. POWER STEERING ASSIST CYLINDER AND SOCKET MAINTENANCE (Contd)

c. Assembly

1. Install new backup ring (5), new spring (4), and two new ball seats (3) and (2) into tie rod end socket (6).
2. Install adjusting cap (1) loosely on tie rod end socket (6).
3. Measure 1.63 in. (41 mm) from end of piston rod (9) and mark.
4. Slide clamp (8) on tie rod end socket (6) and install tie rod end socket (6) with clamp (8) on piston rod (9) to mark scribed in step 3.
5. Position clamp (8) 0.13 in. (3.17 mm) from edge of tie rod end socket (6) and install on tie rod end socket (6) with screw (7), washer (10), and nut (11). Tighten nut (11) 30-40 lb-ft (41-54 N•m).

d. Installation

1. Wrap male threads of elbows (16) with antiseize tape and install two elbows (16) on power steering assist cylinder (22).
2. Install two grease fittings (12) on power steering assist cylinder (22).
3. Install new dust shield (24) and new felt pad (23) on steering arm ball stud (14).

CAUTION

Ensure power steering assist cylinder and tie rod end socket are properly seated on ball studs. Failure to do so may result in damage to equipment.

4. Install tie rod end socket (6) on steering arm ball stud (14).
5. Tighten adjusting cap (1) until adjusting cap (1) bottoms out, back off one complete turn, then back off adjusting cap (1) until holes of adjusting cap (1) and socket (6) aline. Install new cotter pin (13) through tie rod end socket (6) and adjusting cap (1).
6. Close and hook tabs of dust shield (24) on tie rod end socket (6).
7. Install new dust shield (18) and felt pad (19) on spring shackle ball stud (17).
8. Install power steering assist cylinder (22) on spring shackle ball stud (17).
9. Tighten adjusting plug (20) until adjusting plug (20) bottoms out, back off one complete turn, then back off adjusting plug (20) until holes aline. Install new cotter pin (21) through power steering assist cylinder (22) and adjusting plug (20).
10. Close and hook tabs of dust shield (18) on power steering assist cylinder (22).
11. Install two hoses (15) on elbows (16). Tighten hoses (15) 20-25 lb-ft (27-34 N•m).
12. Lubricate power steering assist cylinder (22) (LO 9-2320-260-12).

e. On-Vehicle Adjustment

1. Loosen nut (11) and turn piston rod (9) counterclockwise until piston rod (9) is disconnected from tie rod end socket (6).
2. Clean piston rod (9) and tie rod end socket (6) with rag.
3. Measure 1.63 in. (41 mm) ± 1 thread from end of piston rod (9) and mark.
4. Install piston rod (9) on tie rod end socket (6) by turning piston rod (9) clockwise to mark made in step 3.
5. Ensure clamp (8) is positioned 0.13 in. (3.17 mm) from edge of tie rod end socket (6), and tighten nut (11) 30-40 lb-ft (41-54 N•m).

9-10. POWER STEERING ASSIST CYLINDER AND SOCKET MAINTENANCE (Contd)

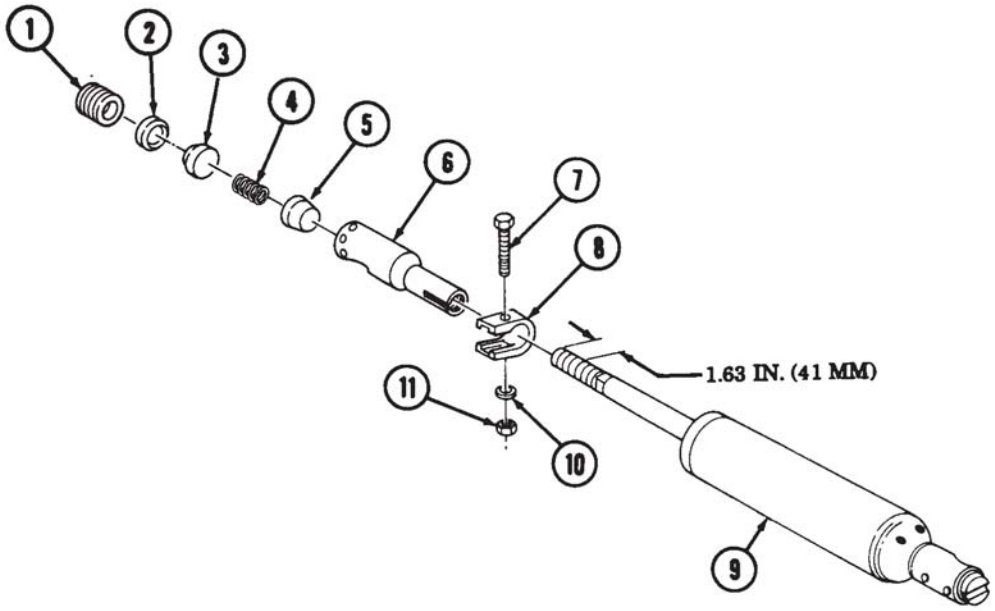

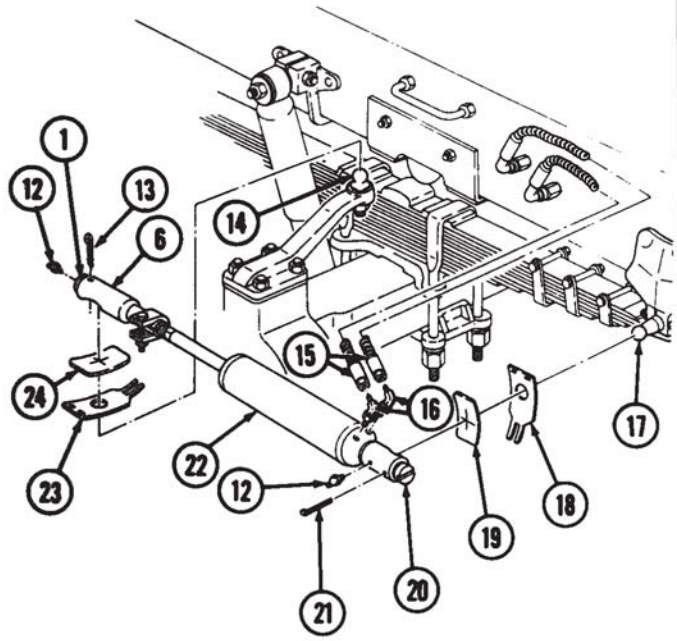

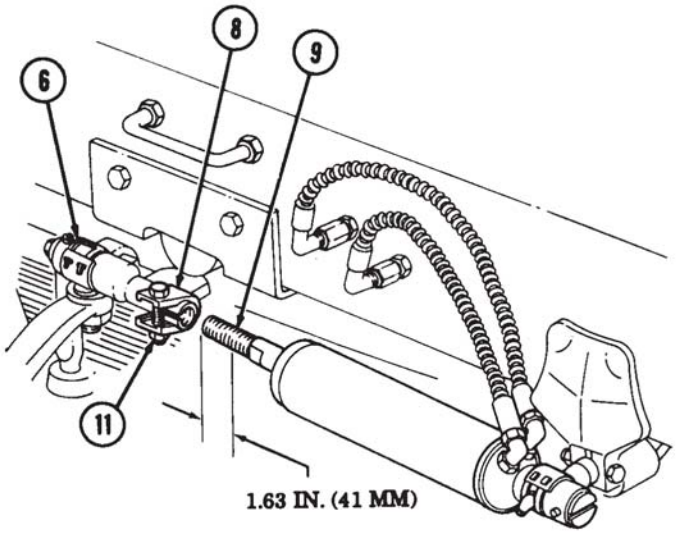

FOLLOW-ON TASKS:
- Fill power steering reservoir to proper level (LO 9-2320-260-12) and check for leaks.
- Start engine (TM 9-2320-260-10) and check hoses for leaks.
- Install power steering assist cylinder stone shields (para. 11-26).
- Bleed hydraulic power steering system (para. 9-17).

9-11. PITMAN ARM REPLACEMENT

THIS TASK COVERS:

a. Removal **b. Installation**

INITIAL SETUP

APPLICABLE MODELS
All

MATERIALS/PARTS
Lockwasher
Cotter pin
Dust shield
Felt pad

REFERENCES (TM)
TM 9-2320-260-10
TM 9-2320-260-20P

EQUIPMENT CONDITION
Parking brake set (TM 9-2320-260-10).

a. Removal

1. Turn front wheels all the way to the left.
2. Unhook and open tabs of dust shield (5).
3. Remove cotter pin (2) and loosen adjusting plug (6) until adjusting plug (6) is almost out of drag link (3). Discard cotter pin (2).
4. Remove drag link (3), dust shield (5), and felt pad (4) from pitman arm (9). Discard dust shield (5) and felt pad (4).
5. Remove nut (7) and lockwasher (8) from pitman arm (9) and splined shaft (10). Discard lockwasher (8).
6. Using puller, remove pitman arm (9) from steering gear (1).

b. Installation

CAUTION

Do not drive pitman arm on splined shaft of steering gear. Damage to equipment may result.

NOTE

Ensure that all parts are clean for easier installation.

1. Aline marks on pitman arm (9) with marks on splined shaft (10) of steering gear (1) and install pitman arm (9) on steering gear (1).
2. Install new lockwasher (8) and nut (7) on pitman arm (9) and splined shaft (10). Tighten nut (7) 475-500 lb-ft (644-678 N•m).
3. Install new dust shield (5), new felt pad (4), and drag link (3) on pitman arm (9). Ensure that drag link (3) is seated properly on pitman arm (9).
4. Tighten adjusting plug (6), then back off until cotter pin holes aline.
5. Install new cotter pin (2) on drag link (3) and adjusting plug (6).

9-11. PITMAN ARM REPLACEMENT (Contd)

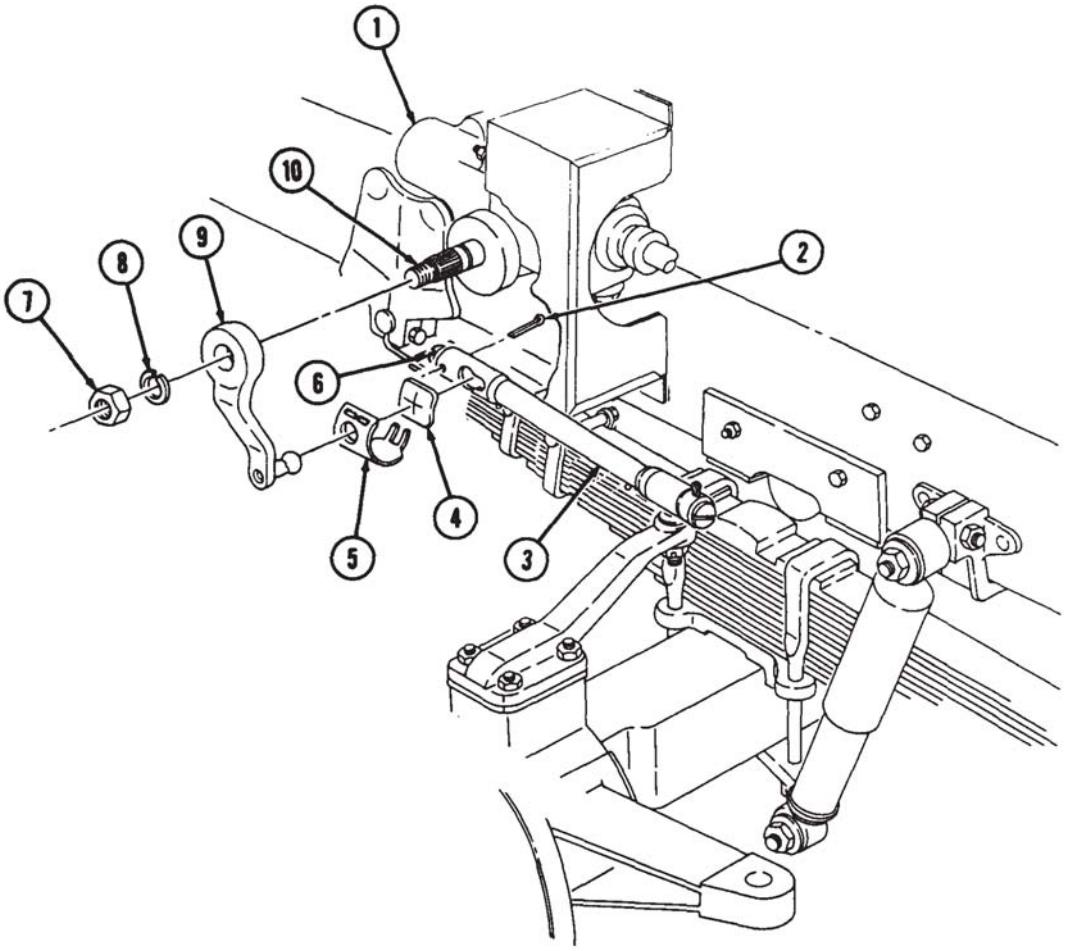

9-12. DRAG LINK REPLACEMENT

THIS TASK COVERS:

a. Removal

b. Installation

INITIAL SETUP

APPLICABLE MODELS

All

MATERIALS/PARTS

Drag link repair kit
Drycleaning solvent (Appendix C, Item 29)
Rags (Appendix C, Item 22)

REFERENCES (TM)

LO 9-2320-260-12
TM 9-2320-260-10
TM 9-2320-260-20P

EQUIPMENT CONDITION

Parking brake set (TM 9-2320-260-10).

GENERAL SAFETY INSTRUCTIONS

Keep fire extinguisher nearby when using drycleaning solvent.

a. Removal

1. Turn front wheels all the way to the left.
2. Unhook and open tabs of two dust shields (16).
3. Remove two cotter pins (6) and loosen adjusting plugs (1) and (11) until plugs (1) and (11) are almost out of drag link (19). Discard cotter pins (6).
4. Remove drag link (19) from pitman arm (7) and steering arm (10).
5. Remove adjusting plugs (1) and (11), safety plugs (2) and (15), springs (3) and (14), and ball seats (4), (5), (12), and (13) from drag link (19). Discard adjusting plugs (1) and (11), safety plugs (2) and (15), springs (3) and (14), and ball seats (4), (5), (12), and (13).
6. Remove two dust shields (16) and felt pads (17) from pitman arm ball (8) and steering arm ball (9). Discard dust shields (16) and felt pads (17).

WARNING

Drycleaning solvent is flammable and will not be used near open flame. Use only in well-ventilated places. Failure to do so may result in injury to personnel.

7. Clean drag link (19), pitman arm ball (8), and steering arm ball (9) with drycleaning solvent and allow to air dry.
8. Remove two grease fittings (18) if damaged. Discard grease fittings (18).

b. Installation

NOTE

The opening closest to the end of drag link attaches to steering arm.

1. Install two new grease fittings (18) on drag link (19) if removed.
2. Install new safety plug (15), new spring (14), and new ball seat (13) into drag link (19).
3. Install new ball seat (5) into drag link (19).
4. Install two new dust shields (16), new felt pads (17), and drag link (19) on steering arm (10) and pitman arm ball (8). Ensure that ball seat (13) is seated on steering arm ball (9).

9-12. DRAG LINK REPLACEMENT (Contd)

5. Install two new ball seats (4) and (12), new spring (3), new safety plug (2), and new adjusting plugs (1) and (11) into drag link (19).
6. Lubricate drag link (19) (LO 9-2320-260-12).
7. Tighten adjusting plugs (1) and (11), then back off adjusting plugs (1) and (11) until holes aline. Install new cotter pins (6) through drag link (19) and adjusting plugs (1) and (11).
8. Close and hook tabs on two dust shields (16).

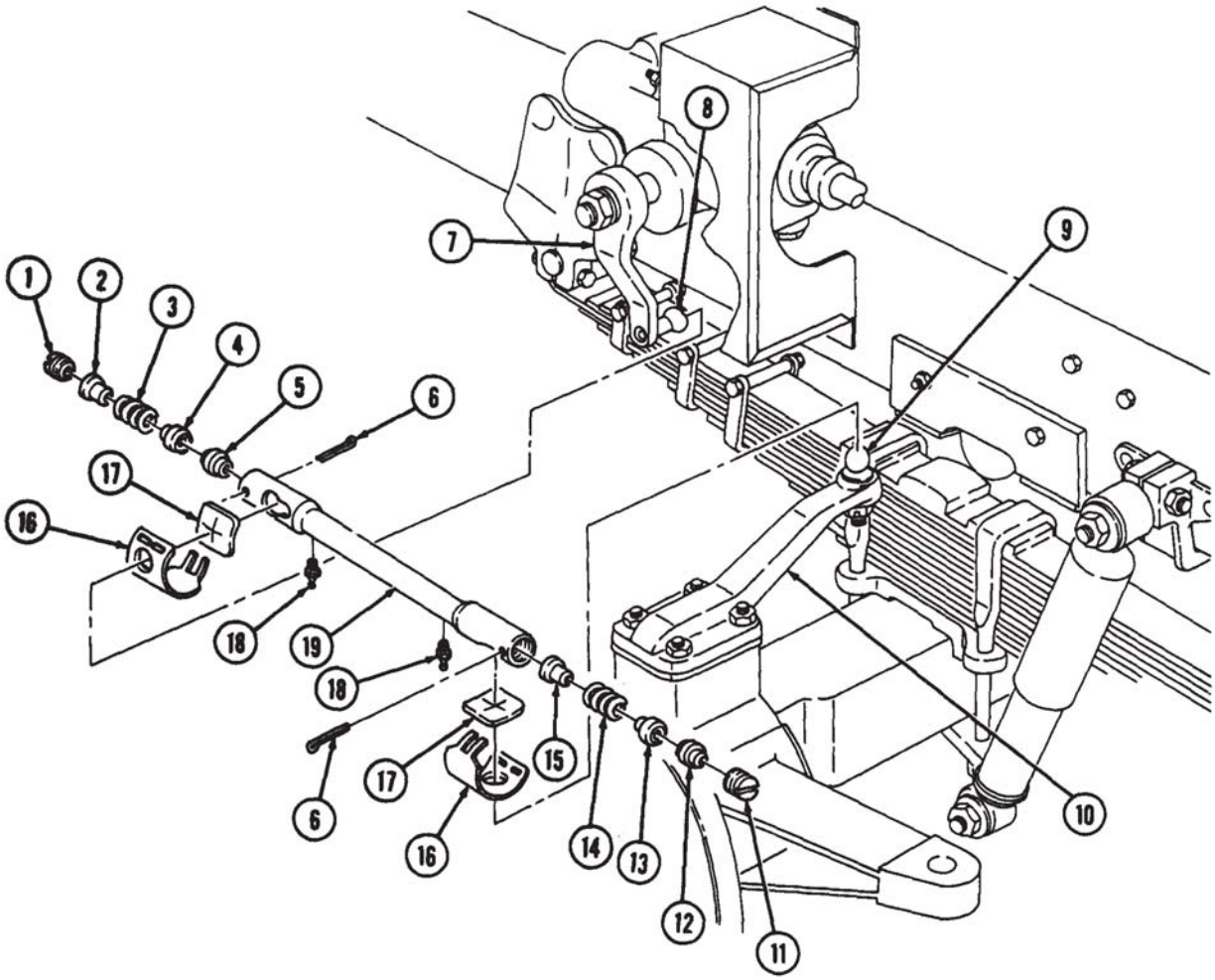

9-13. STEERING WHEEL REPLACEMENT

THIS TASK COVERS:

a. Removal **b. Installation**

INITIAL SETUP

APPLICABLE MODELS
All

REFERENCES (TM)
TM 9-2320-260-10
TM 9-2320-260-20P

EQUIPMENT CONDITION
- Parking brake set (TM 9-2320-260-10).
- Horn button removed (para. 4-30).

a. Removal

1. Place wheels in straight-ahead position.
2. Loosen screw (6) and slide turn signal control (8) down steering column (7).

NOTE

Perform step 3 only if vehicle is equipped with airbrake hand control lever.

3. Loosen two screws (5) and slide airbrake hand control lever (4) down steering column (7).
4. Unscrew nut (2) until it is level with top of shaft (3).
5. Install adapter (11) on steering wheel shaft (3) and adapter (12) on steering column (7).
6. Install puller (10) on adapters (11) and (12) and tighten puller screw (9) until steering wheel (1) pops loose.
7. Remove puller (10), nut (2), adapters (11) and (12), and steering wheel (1) from steering column (7).

b. Installation

1. Place steering wheel (1) with adapter (11) and (12) on steering column (7) and tap evenly on wheel (1) until nut (2) can be installed.
2. Install nut (2) on steering wheel shaft (3). Tighten nut (2) 55-60 lb-ft (75-81 N•m).

NOTE

Perform step 3 only if vehicle is equipped with airbrake hand control lever.

3. Slide airbrake hand control lever (4) up steering column (7) and tighten two screws (5).
4. Slide turn signal control (8) up steering column (7) and tighten screw (6).

9-13. STEERING WHEEL REPLACEMENT (Contd)

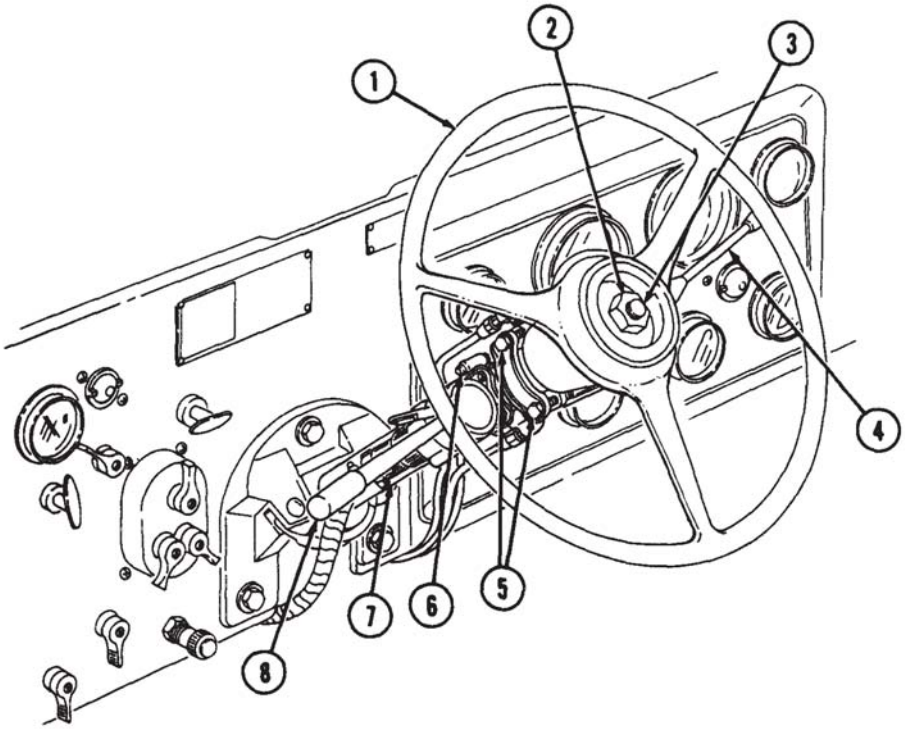

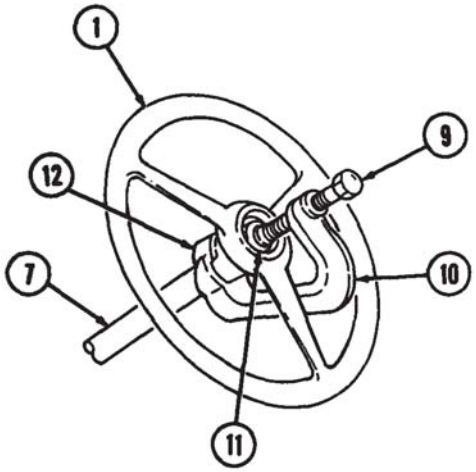

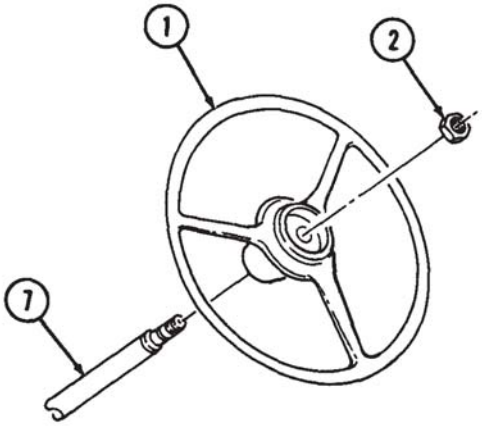

FOLLOW-ON TASK: Install horn button (para. 4-30).

9-14. STEERING COLUMN PROPELLER SHAFT REPLACEMENT

THIS TASK COVERS:

a. Removal **b. Installation**

INITIAL SETUP

APPLICABLE MODELS
All

MATERIALS/PARTS
Two lockwashers

REFERENCES (TM)
TM 9-2320-260-10
TM 9-2320-260-20P

EQUIPMENT CONDITION
- Parking brake set (TM 9-2320-260-10).
- Access panel removed (TM 9-2320-260-10).
- Steering gear shield removed (para. 11-25).

a. Removal

NOTE

Mark position of shaft for installation.

1. Scribe a mark through the slots of the universal joints (3) and (7) to the steering gear (1) and steering column (6).
2. Remove two nuts (4), lockwashers (5), and screws (2) from universal joints (3) and (7), steering gear (1), and steering column (6). Discard lockwashers (5).
3. Slide shaft (8) toward steering column (6) and remove from steering gear (1).
4. Remove shaft (8) from steering column (6).

b. Installation

1. Aline mark on universal joint (7) with mark on steering column (6) and install shaft (8) on steering column (6).
2. Aline mark on universal joint (3) with mark on steering gear (1) and install shaft (8) on steering gear (1).
3. Install two screws (2), new lockwashers (5), and nuts (4) on universal joints (3) and (7), steering gear (1), and steering column (6). Tighten nuts (4) 35 lb-ft (47 N•m).

9-14. STEERING COLUMN PROPELLER SHAFT REPLACEMENT (Contd)

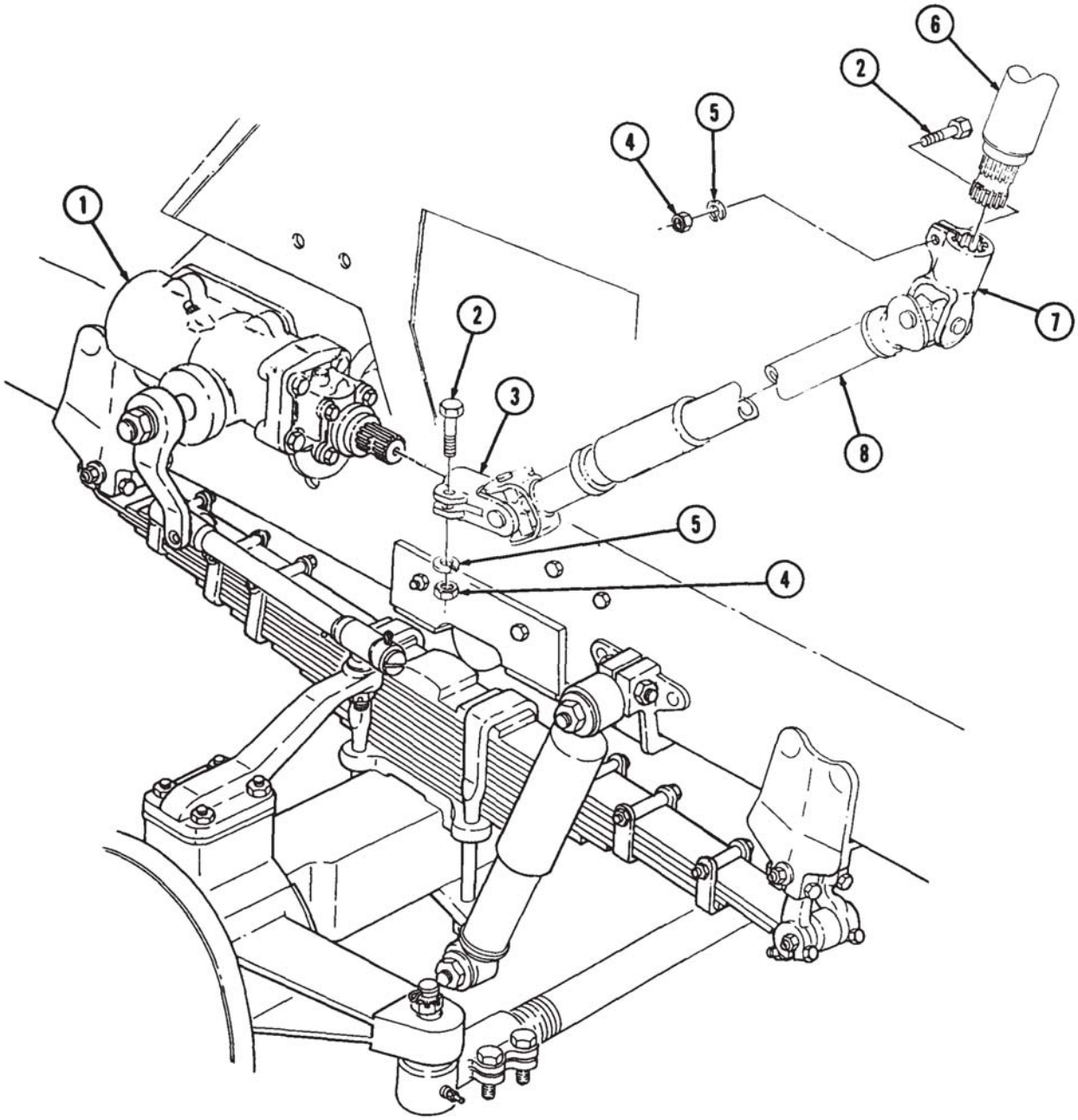

FOLLOW-ON TASKS: • Install steering gear shield (para. 11-25).
• Install access panel (TM 9-2320-260-10).

9-15. STEERING COLUMN REPLACEMENT

THIS TASK COVERS:

a. Removal

b. Installation

INITIAL SETUP

APPLICABLE MODELS
All

MATERIALS/PARTS
Lockwasher
Six locknuts
Gasket

PERSONNEL REQUIRED
Two

REFERENCES (TM)
TM 9-2320-260-10
TM 9-2320-260-20P

EQUIPMENT CONDITION
- Parking brake set (TM 9-2320-260-10).
- Steering wheel removed (para. 9-13).
- Horn contact brush removed (para. 4-31).
- Turn signal control removed (para. 4-33).
- Airbrake hand control valve removed (M818) (para. 8-23).
- Airbrake hand control valve removed (all except M818) (para. 14-48).

a. Removal

1. Remove nut (9), lockwasher (8), screw (11), and shaft (10) from steering column (6). Discard lockwasher (8).
2. Remove two screw-assembled washers (15), clamps (16), and steering column (6) from support brackets (1) and (17).
3. Remove two bushings (4) from steering column (6).

NOTE

Perform steps 4 and 5 if support brackets require replacement.

4. Remove three locknuts (12), screws (18), six washers (13), support bracket (17), and gasket (14) from firewall (7). Discard locknuts (12) and gasket (14).
5. Remove three locknuts (19). screws (3), six washers (2), and support bracket (1) from instrument panel (5). Discard locknuts (19).

b. Installation

NOTE

Perform steps 1 and 2 if support brackets were removed.

1. Install support bracket (1) on instrument panel (5) with six washers (2), three screws (3), and new locknuts (19).
2. Install new gasket (14) and support bracket (17) on firewall (7) with six washers (13), three screws (18), and new locknuts (12).
3. Install two bushings (4) on steering column (6).
4. Insert steering column (6) through firewall (7) and install steering column (6) on support brackets (1) and (17) with two clamps (16) and screw-assembled washers (15). Ensure clamps (16) and bushings (4) are alined in support brackets (1) and (17).
5. Position shaft (10) on steering column (6) and install with screw (11), new lockwasher (8), and nut (9).

9-15. STEERING COLUMN REPLACEMENT (Contd)

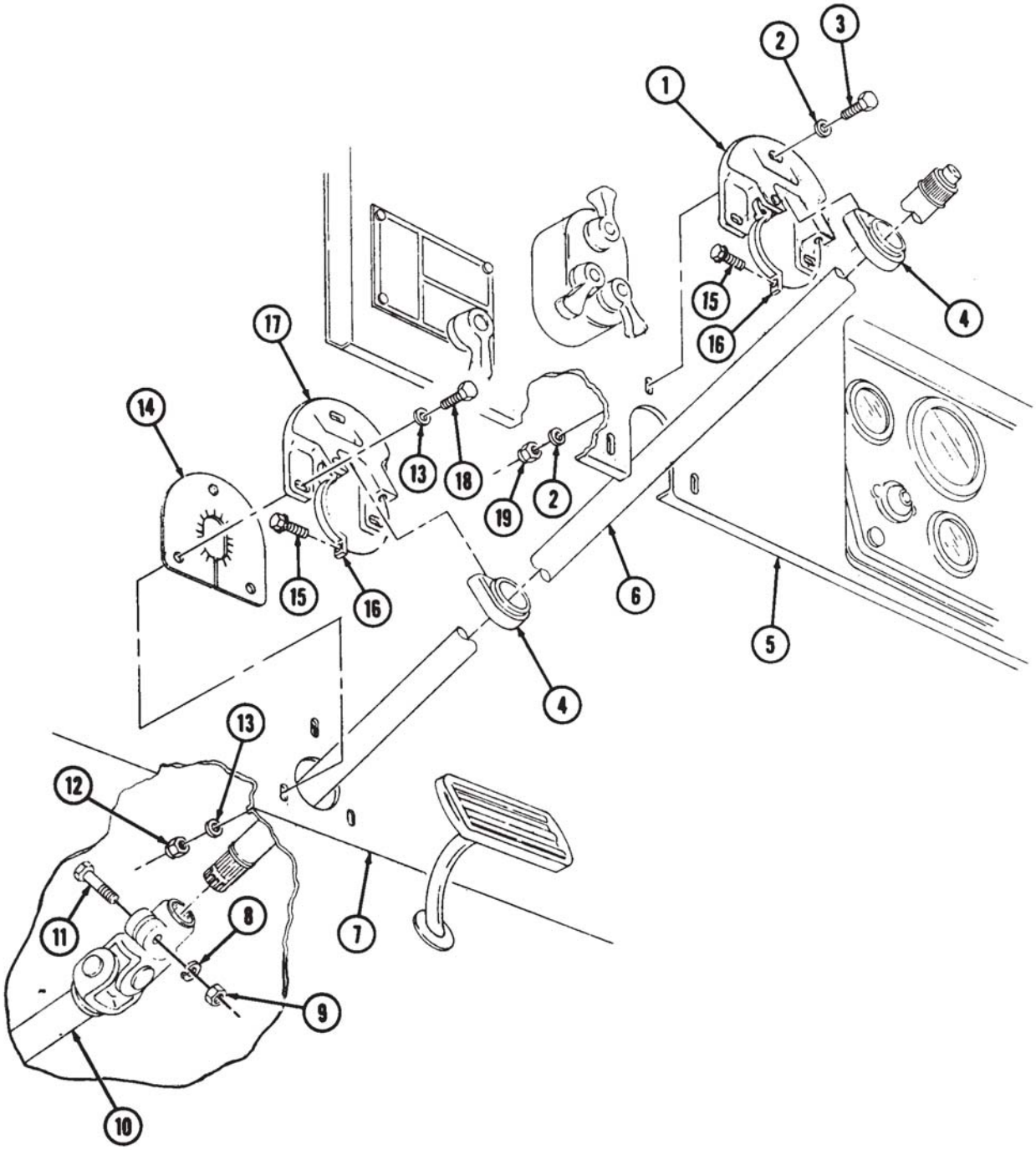

FOLLOW-ON TASKS:
- Install airbrake hand control valve (all except M818) (para. 14-48).
- Install airbrake hand control valve (M818) (para. 8-23).
- Install turn signal control (para. 4-33).
- Install horn contact brush (para. 4-31).
- Install steering wheel (para. 9-13).

9-16. POWER STEERING PUMP DRIVEBELTS MAINTENANCE

THIS TASK COVERS:

a. Removal
b. Inspection
c. Installation
d. Adjustment

INITIAL SETUP

APPLICABLE MODELS
All

REFERENCES (TM)
TM 9-2320-260-10
TM 9-2320-260-20P

EQUIPMENT CONDITION
- **Parking** brake set (TM 9-2320-260-10).
- Hood raised and secured (TM 9-2320-260-10).
- Fan drivebelts removed (para. 3-52).

a. Removal

1. Loosen two screws (2) on mounting bracket (3).
2. Loosen nut (7) and screw (8) on adjusting link (6).
3. Rotate power steering pump (4) away from engine (1) to loosen drivebelts (9).
4. Remove drivebelts (9) from power steering pump pulley (5) and accessory drive pulley (10).

b. Inspection

Inspect drivebelts (9) for cracks, breaks, and frays. Replace drivebelts (9) if cracked, broken, or frayed.

c. Installation

1. Install drivebelts (9) on power steering pump pulley (5) and third and fourth groove of accessory drive pulley (10).

NOTE

Assistant will help with steps 2 through 4.

2. Rotate power steering pump (4) toward engine (1) until drivebelts (9) are tight.
3. Tighten nut (7) and screw (8) on adjusting link (6) 25-31 lb-ft (34-42 N•m).
4. Tighten two screws (2) on mounting bracket (3) 25-31 lb-ft (34-42 N•m).

d. Adjustment

1. Loosen two screws (2) on mounting bracket (3).
2. Loosen nut (7) and screw (8) on adjusting link (6).

NOTE

Assistant will help with steps 3 through 5.

3. Rotate power steering pump (4) until drivebelts (9) have proper tension.
4. Tighten screw (8) and nut (7) on adjusting link (6) 25-31 lb-ft (34-42 N•m).
5. Tighten two screws (2) on mounting bracket (3) 25-31 lb-ft (34-42 N•m).

9-16. POWER STEERING PUMP DRIVEBELTS MAINTENANCE (Contd)

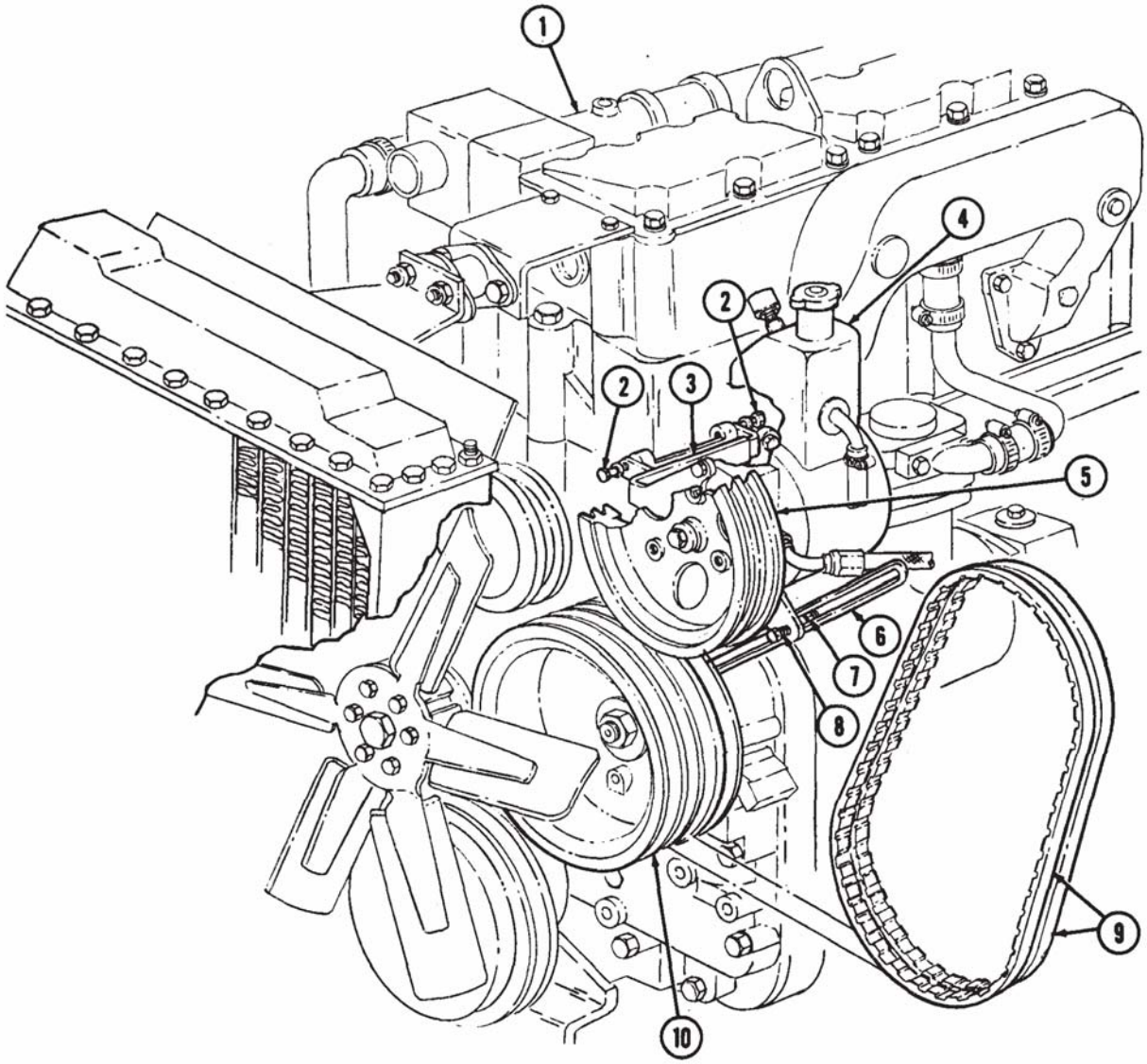

FOLLOW-ON TASK: Install fan drivebelts (para. 3-52).

9-17. POWER STEERING PUMP MAINTENANCE

THIS TASK COVERS:

a. Removal
b. Installation
c. Bleeding Hydraulic Power Steering System

INITIAL SETUP

APPLICABLE MODELS
All

MATERIALS/PARTS
Five lockwashers
Breather
Woodruff key
Two locknuts

REFERENCES (TM)
TM 9-2320-260-10
TM 9-2320-260-20P

EQUIPMENT CONDITION
- Parking brake set (TM 9-2320-260-10).
- Hood raised and secured (TM 9-2320-260-10).
- Power steering pump drivebelts removed (para. 9-16).
- Power steering pump hoses removed (para. 9-18).

a. Removal

1. Remove three screws (11), lockwashers (12), and power steering pump (2) from bracket (13). Discard lockwashers (12).

NOTE

Perform steps 2 through 7 if power steering pump or mounting bracket require replacement.

2. Remove breather (1) from power steering pump (2). Discard breather (1).
3. Remove screw-assembled washer (17) and washer (16) from pulley (15) and power steering pump (2).
4. Using puller, remove pulley (15) and woodruff key (14) from power steering pump (2). Discard woodruff key (14).
5. Remove locknut (5), screw (3), two washers (4), and adjusting arm (8) from bracket (13). Discard locknut (5).
6. Remove locknut (10), screw (6), two washers (7), and adjusting arm (8) from engine (9). Discard locknut (10).
7. Remove two screws (20), lockwashers (19), and bracket (13) from bracket (18). Discard lockwashers (19).

b. Installation

NOTE

Perform steps 1 through 6 if new power steering pump is being installed or mounting brackets were removed.

1. Install bracket (13) on bracket (18) with two new lockwashers (19) and screws (20). Finger tighten screws (20).
2. Install adjusting arm (8) on engine (9) with two washers (7), screw (6), and new locknut (10). Finger tighten locknut (10).
3. Install adjusting arm (8) on bracket (13) with two washers (4), screw (3), and new locknut (5). Finger tighten locknut (5).
4. Install new woodruff key (14) on power steering pump (2).
5. Install pulley (15) on power steering pump (2) with washer (16) and screw-assembled washer (17).
6. Install new breather (1) on power steering pump (2).
7. Install power steering pump (2) on bracket (13) with three new lockwashers (12) and screws (11). Tighten screws (11) 25-30 lb-ft (34-41 N•m).
8. Install power steering pump hoses (para. 9-18).
9. Install power steering pump drivebelts (para. 9-16).

9-17. POWER STEERING PUMP MAINTENANCE (Contd)

c. Bleeding Hydraulic Power Steering System

CAUTION

Do not hold steering wheel at full-wheel stop position for more than 15 seconds. Damage to equipment may result.

Slowly turn steering wheel (21) clockwise and counterclockwise to each full-wheel stop position until screeching sound from hydraulic power steering system stops.

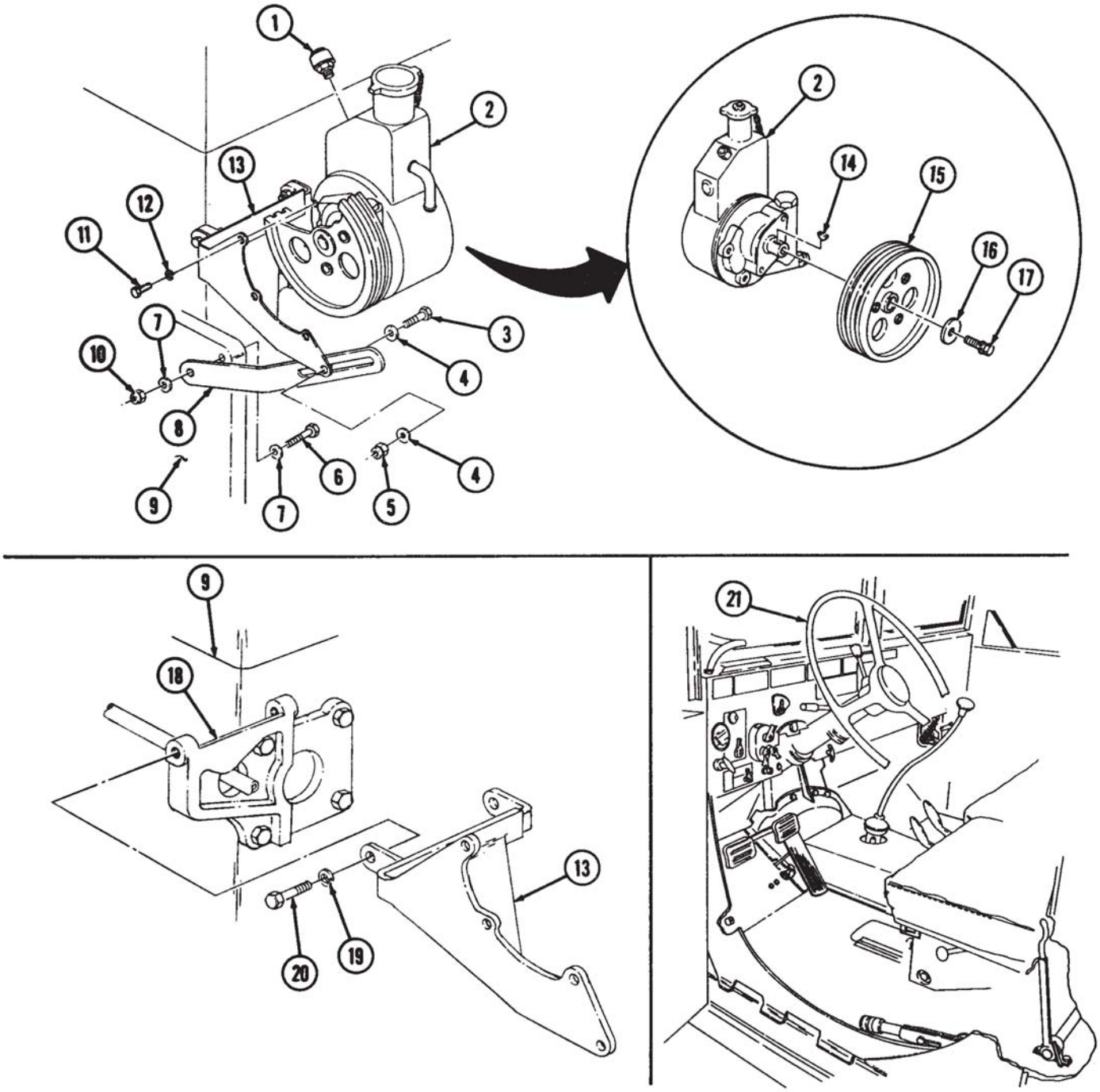

9-18. POWER STEERING PUMP HOSES REPLACEMENT

THIS TASK COVERS:

a. Removal **b. Installation**

INITIAL SETUP

APPLICABLE MODELS
All

MATERIALS/PARTS
Cap and plug set (Appendix C, Item 9)
Antiseize tape (Appendix C, Item 30)

REFERENCES (TM)
LO 9-2320-260-12
TM 9-2320-260-10
TM 9-2320-260-20P

EQUIPMENT CONDITION
- Parking brake set (TM 9-2320-260-10).
- Hood raised and secured (TM 9-2320-260-10).
- Power steering pump reservoir drained (TM 9-2320-260-10).
- Power steering gear stone shield removed (para. 11-26).

a. Removal

1. Remove nut (11), screw (9), and strap (10) from pressure hose (8) and return hose (3).
2. Loosen and slide clamp (2) down return hose (3).

CAUTION

Cap or plug all open hydraulic lines, fittings, and ports to prevent dirt contamination from entering system. Failure to do so may result in damage to internal components.

NOTE

- Tag hydraulic lines and ports for installation.
- Have drainage container ready to catch hydraulic fluid.

3. Disconnect return tube (5) from power steering gear (6).
4. Disconnect return hose (3) from power steering pump (1).
5. Remove clamps (2) and (4) from return hose (3) and tube (5), and separate return hose (3) from tube (5).
6. Disconnect pressure hose (8) from power steering pump (1).
7. Disconnect pressure hose (8) from elbow (7).

b. Installation

NOTE

Protective caps and plugs must be removed from lines, fittings, and ports before installation.

1. Apply antiseize tape to male threads of tube (5), elbow (7), and pressure hose (8).
2. Install pressure hose (8) on elbow (7).
3. Install pressure hose (8) on power steering pump (1).
4. Slide clamps (2) and (4) on return hose (3).
5. Install tube (5) in return hose (3) and tighten clamp (4) around connection of return hose (3) and tube (5).
6. Install tube (5) on power steering gear (6).

9-18. POWER STEERING PUMP HOSES REPLACEMENT (Contd)

7. Install return hose (3) on power steering pump (1).
8. Slide clamp (2) up return hose (3) and tighten clamp (2) at connection of return hose (3) and power steering pump (1).
9. Install strap (10) around return hose (3) and pressure hose (8) with screw (9) and nut (11).

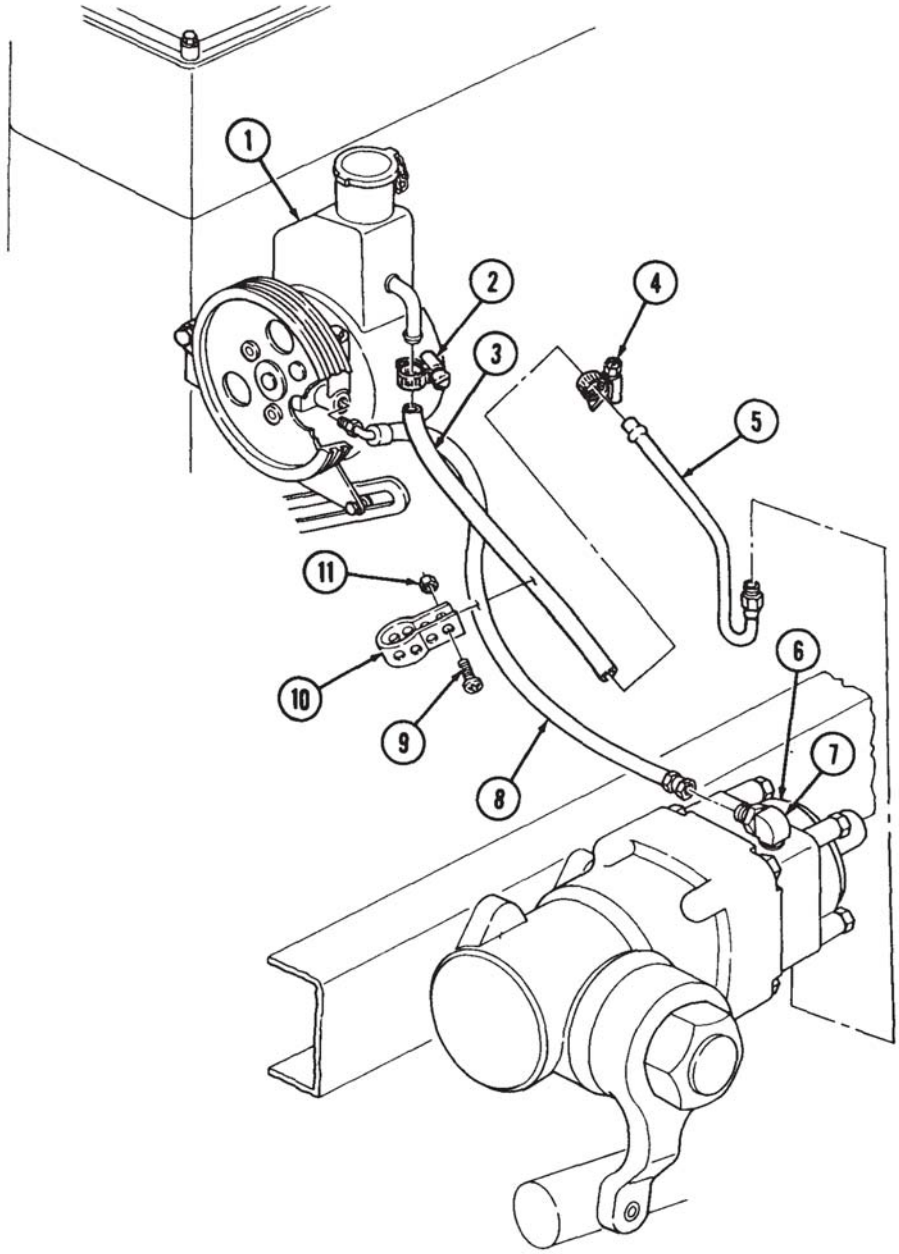

FOLLOW-ON TASKS:
- Fill power steering pump reservoir to proper level (LO 9-2320-260-12) and check for leaks.
- Bleed hydraulic power steering system (para. 9-17).
- Install power steering gear stone shield (para. 11-26).

9-19. POWER STEERING GEAR-TO-ASSIST CYLINDER TUBES REPLACEMENT

THIS TASK COVERS:

a. Removal **b. Installation**

INITIAL SETUP

APPLICABLE MODELS
All

MATERIALS/PARTS
O-ring
Two locknuts
Cap and plug set (Appendix C, Item 9)
Antiseize tape (Appendix C, Item 30)

REFERENCES (TM)
LO 9-2320-260-12
TM 9-2320-260-10
TM 9-2320-260-20P

EQUIPMENT CONDITION
Parking brake set (TM 9-2320-260-10).

NOTE

Pressure and return hydraulic power steering lines are replaced the same way. This task covers the power steering pressure line replacement only.

a. Removal

CAUTION

Cap or plug all open hydraulic lines, fittings, and ports to prevent dirt contamination from entering system. Failure to do so may result in damage to internal components.

NOTE

- Tag hydraulic lines and ports for installation.
- Have drainage container ready to catch hydraulic fluid.

1. Disconnect power steering pressure line (8) from adapter (11) on power steering gear (1).
2. Remove adapter (11) and O-ring (12) from power steering gear (1). Discard O-ring (12).
3. Remove two locknuts (2), screws (6), clamps (3), clips (5), and spacers (4) from truck frame (9). Discard locknuts (2).
4. Remove wiring harness (7) from clips (5).
5. Disconnect power steering pressure line (8) from elbow (10) on truck frame (9).
6. Remove power steering pressure line (8) from truck frame (9).

b. Installation

1. Apply antiseize tape to male threads of elbow (10) and adapter (11).
2. Install power steering pressure line (8) on elbow (10).
3. Install adapter (11) and new O-ring (12) on power steering gear (1).
4. Install power steering pressure line (8) on pressure line adapter (11) on power steering gear (1).
5. Install two clamps (3), spacers (4), clips (5), screws (6), and new locknuts (2) on truck frame (9). Install wiring harness (7) on clips (5).

9-19. POWER STEERING GEAR-TO-ASSIST CYLINDER TUBES REPLACEMENT (Contd)

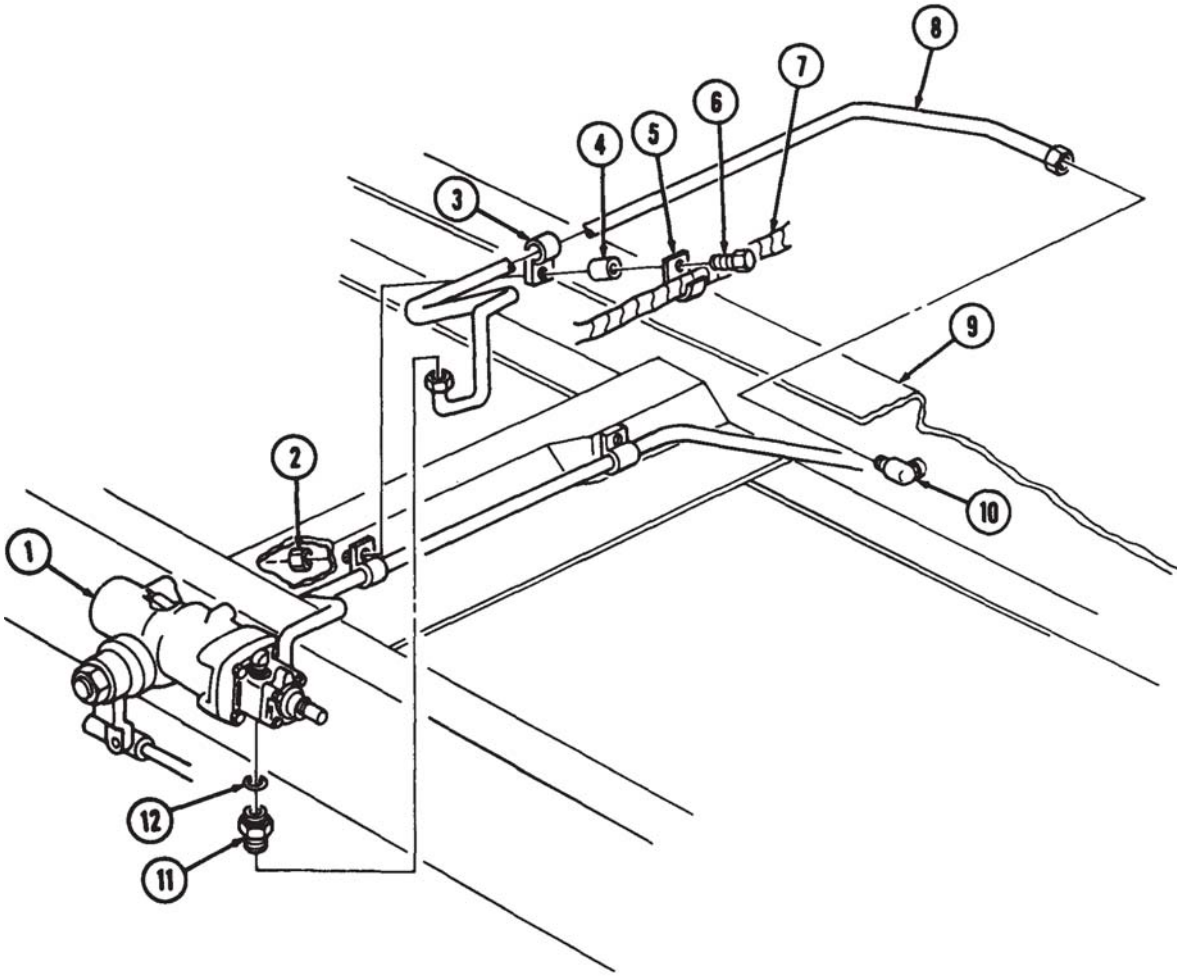

FOLLOW-ON TASKS: • Fill hydraulic power steering system reservoir (LO 9-2320-260-12) and check for leaks.
• Bleed hydraulic power steering system (para. 9-17).

9-20. POWER STEERING ASSIST CYLINDER HOSES REPLACEMENT

THIS TASK COVERS:

a. Removal **b. Installation**

INITIAL SETUP

APPLICABLE MODELS
All

MATERIALS/PARTS
Cap and plug set (Appendix C, Item 9)
Antiseize tape (Appendix C, Item 30)

REFERENCES (TM)
LO 9-2320-260-12
TM 9-2320-260-10
TM 9-2320-260-20P

EQUIPMENT CONDITION
- Parking brake set (TM 9-2320-260-10).
- Power steering assist cylinder stone shield removed (para. 11-26).
- Hydraulic power steering reservoir drained (LO 9-2320-260-12).

NOTE

Power steering assist cylinder pressure and return hoses are replaced the same way. This procedure covers the pressure hose only.

a. Removal

CAUTION

Cap or plug all open hydraulic lines, fittings, and ports to prevent dirt contamination from entering system. Failure to do so may result in damage to internal components.

NOTE

- Tag hydraulic lines and ports for installation.
- Have drainage container ready to catch hydraulic fluid.
- Front wheels must be in straight-ahead position.

1. Disconnect hose (3) from elbow (4) on power steering assist cylinder (5).
2. Disconnect hose (3) from elbow (2) on truck frame (1).

b. Installation

1. Apply antiseize tape to male threads of elbows (2) and (4).
2. Connect hose (3) to elbow (2) on truck frame (1).
3. Connect hose (3) to elbow (4) of power steering assist cylinder (5). Tighten hose (3) 20-25 lb-ft (27-34 N•m).

9-20. POWER STEERING ASSIST CYLINDER HOSES REPLACEMENT (Contd)

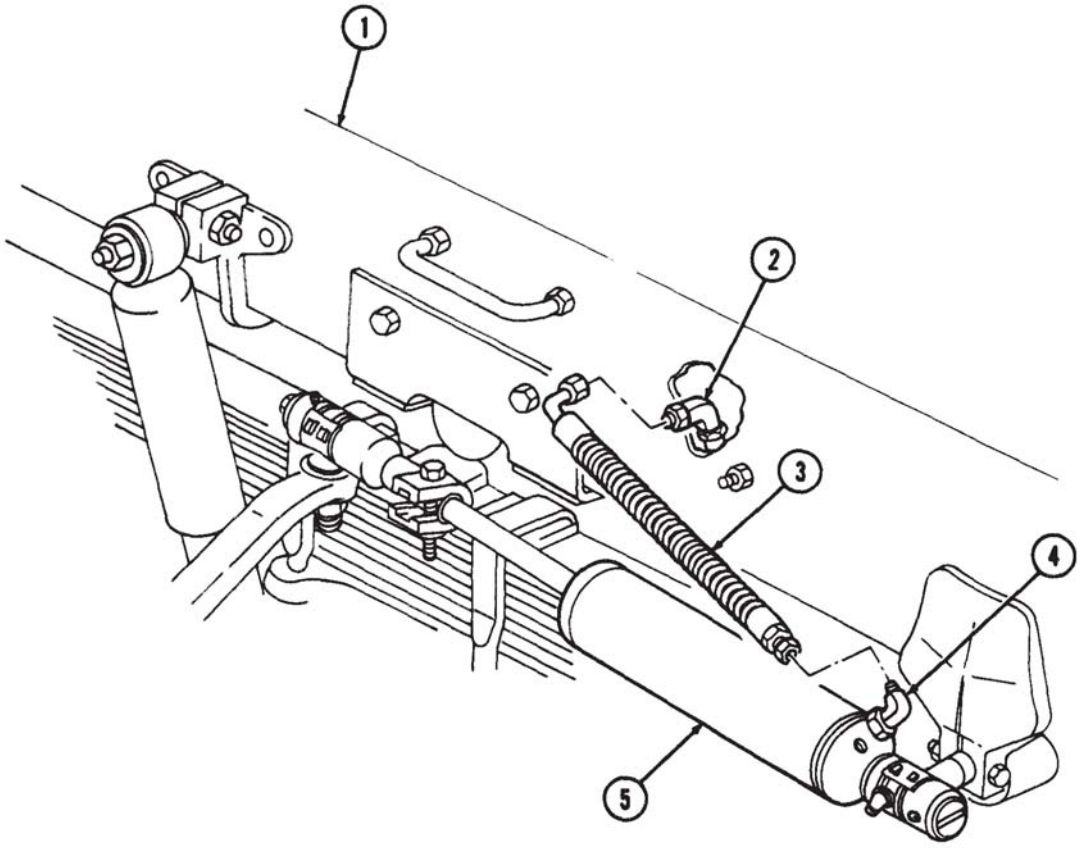

FOLLOW-ON TASKS:
- Fill hydraulic power steering system reservoir (LO 9-2320-260-12) and check for leaks.
- Install power steering assist cylinder stone shield (para. 11-26).
- Bleed hydraulic power steering system (para. 9-17).

CHAPTER 10
FRAME MAINTENANCE

10-1. FRAME MAINTENANCE INDEX

PARA. NO.	TITLE	PAGE NO.
10-2.	Vehicle Tiedown Loop Replacement	10-2
10-3.	Rear Bumperette Replacement	10-3
10-4.	Front Lifting Shackle Replacement	10-4
10-5.	Rear Lifting Shackle Replacement	10-6
10-6.	Front Bumper Step Replacement	10-7
10-7.	Front Bumper Replacement	10-8
10-8.	Chock Anchor Brackets Replacement	10-10
10-9.	Pintle Hook Maintenance	10-12
10-10.	Pintle Mount Replacement (All Except M818)	10-14
10-11.	Pintle Mount Replacement (M818)	10-16
10-12.	Fifth Wheel Replacement (M815)	10-18
10-13.	Fifth Wheel Replacement (M818)	10-20
10-14.	Fifth Wheel Replacement (M819)	10-22

10-2. VEHICLE TIEDOWN LOOP REPLACEMENT

THIS TASK COVERS:

a. Removal **b. Installation**

INITIAL SETUP

APPLICABLE MODELS

All except M814 W/W, M814 WO/W, M816 W/W, M820 WO/W, M820A1 WO/W, M820A2 WO/W, M821 W/W, M821A1 W/W

MATERIALS/PARTS

Two locknuts

REFERENCES (TM)

TM 9-2320-260-10
TM 9-2320-260-20P

EQUIPMENT CONDITION

Parking brake set (TM 9-2320-260-10).

NOTE

All vehicle tiedowns are replaced basically the same. This procedure is for the replacement of vehicle tiedowns with a spacer.

a. Removal

Remove two locknuts (1), washers (2), spacer (5), screws (3), and loop (4) from rail (6). Discard locknuts (1).

b. Installation

Install loop (4) and spacer (5) on rail (6) with two washers (2), screws (3), and new locknuts (1).

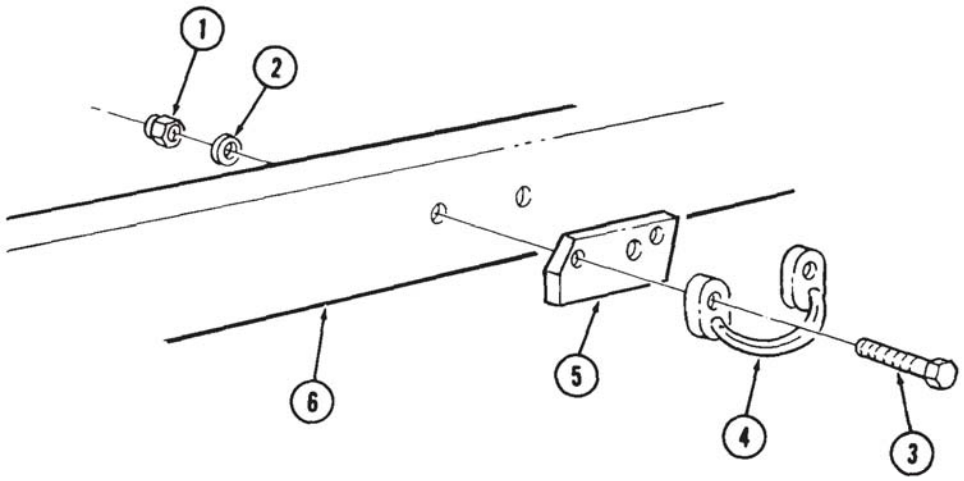

10-3. REAR BUMPERETTE REPLACEMENT

THIS TASK COVERS:

a. Removal **b. Installation**

INITIAL SETUP

APPLICABLE MODELS
All

MATERIALS/PARTS
Six locknuts

REFERENCES (TM)
TM 9-2320-260-10
TM 9-2320-260-20P

EQUIPMENT CONDITION
- Parking brake set (TM 9-2320-260-10).
- Composite light removed (para. 4-45).

a. Removal

1. Remove four locknuts (7) and screws (5) from rail (6). Discard locknuts (7).
2. Remove two locknuts (1), screws (3), and bumperette (4) from crossmember (2). Discard locknuts (1).

b. Installation

1. Install bumperette (4) on crossmember (2) with two screws (3) and new locknuts (1).
2. Install bumperette (4) on rail (6) with four screws (5) and new locknuts (7).

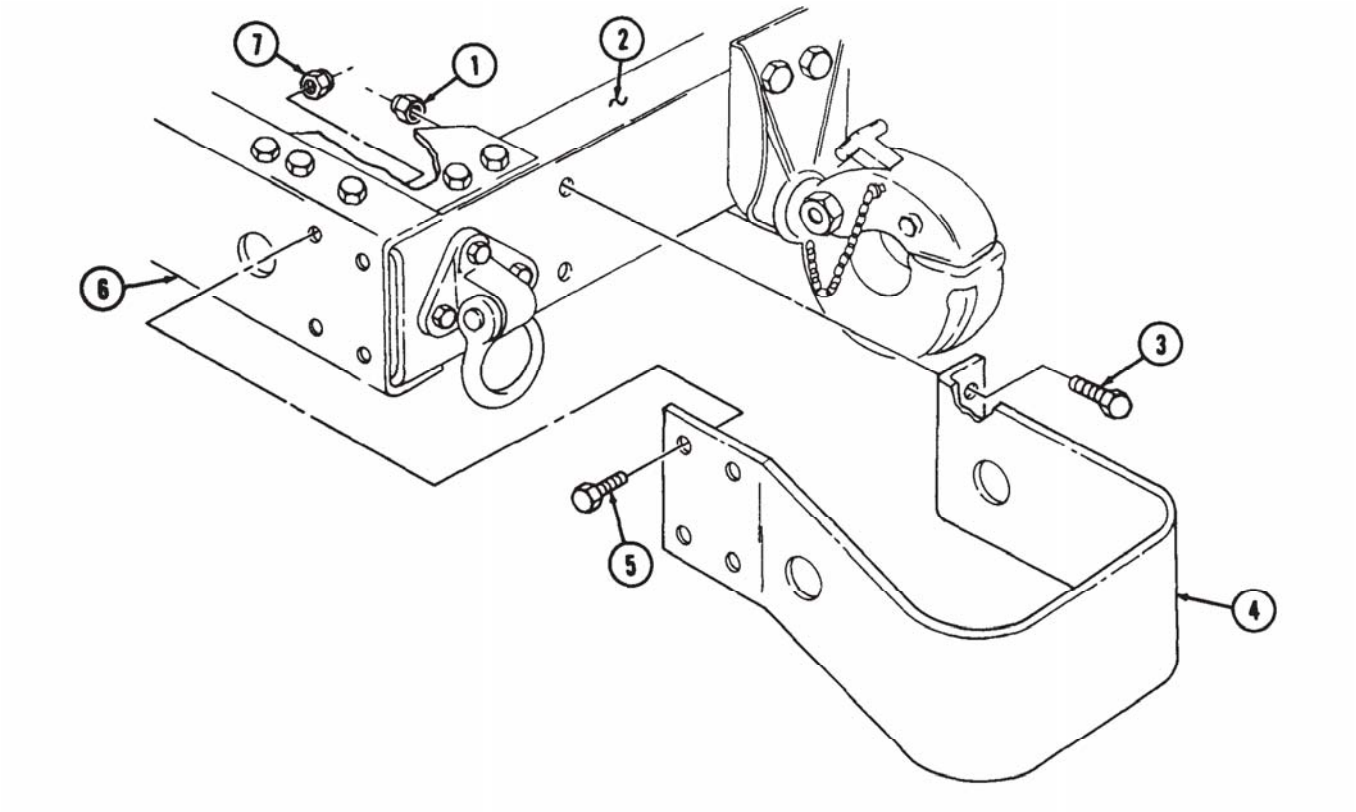

FOLLOW-ON TASK: Install composite light (para. 4-45).

10-4. FRONT LIFTING SHACKLE REPLACEMENT

THIS TASK COVERS:

a. Removal **b. Installation**

INITIAL SETUP

APPLICABLE MODELS
All

MATERIALS/PARTS
Three locknuts

REFERENCES (TM)
TM 9-2320-260-10
TM 9-2320-260-20P

EQUIPMENT CONDITION
Parking brake set (TM 9-2320-260-10).

a. Removal

1. Remove lockpin (9) from retaining pin (7).
2. Remove retaining pin (7) and shackle (6) from bracket (3).
3. Remove two locknuts (10) and screws (2) from bracket (3). Discard locknuts (10).

NOTE

Screw is removed from the bottom of frame for M816 models, to suit a front chock anchor bracket.

4. Remove locknut (11), screw (1), spacer (13), bracket (3), and washer (14) from bumper (5), plate (12), rail (15), and plate (4). Discard locknut (11).

b. Installation

1. Position spacer (13) on plates (4) and (12).

NOTE

Screw is installed from the bottom of frame for M816 models, to suit a front chock anchor bracket.

2. Install bracket (3) on plate (4) with screw (1), washer (14), spacer (13), plate (12), and new locknut (11).
3. Install bracket (3) on bumper (5) with two screws (2) and new locknuts (10).
4. Install shackle (6) on bracket (3) with retaining pin (7) and lockpin (9).

10-4. FRONT LIFTING SHACKLE REPLACEMENT (Contd)

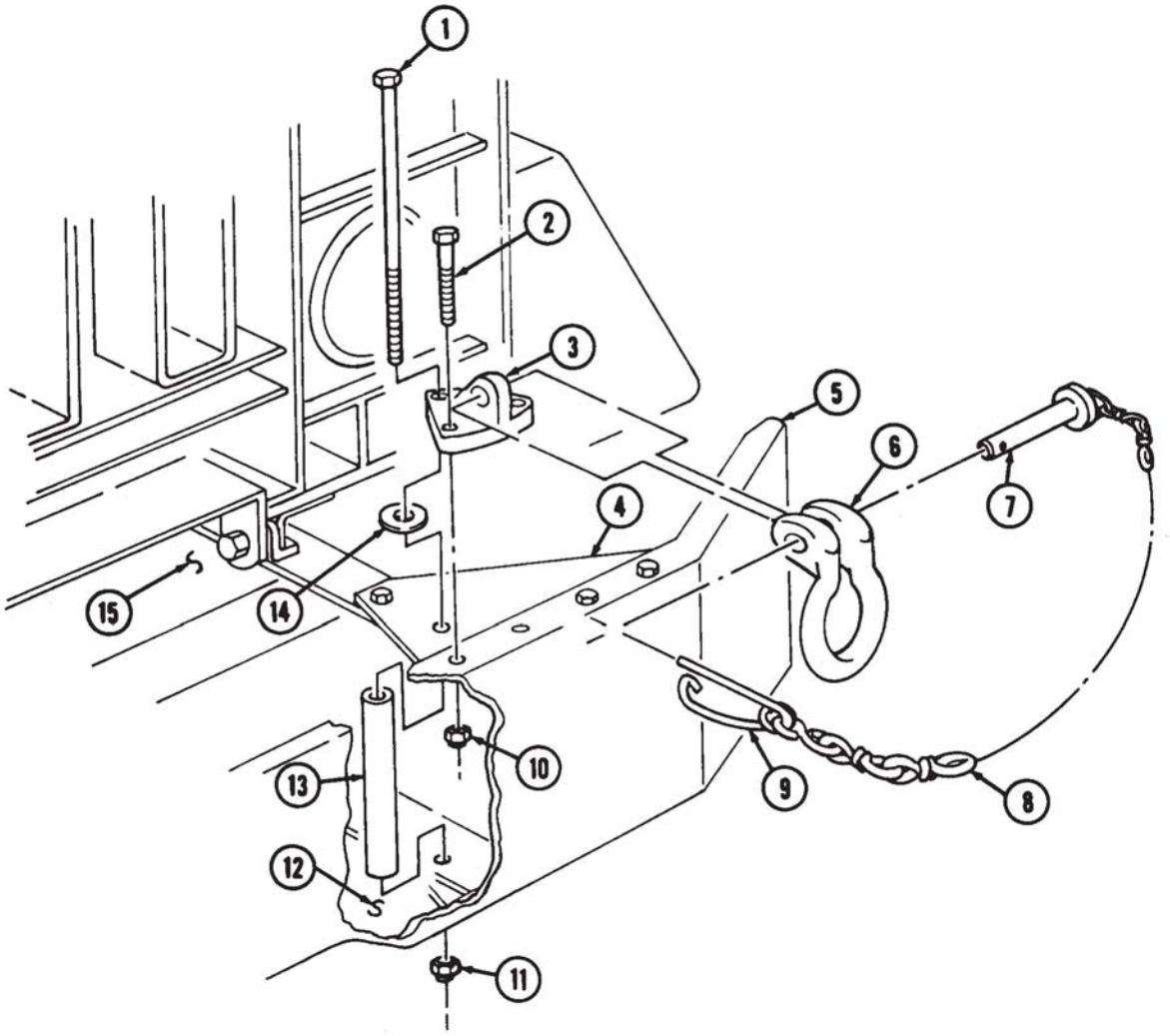

10-5. REAR LIFTING SHACKLE REPLACEMENT

THIS TASK COVERS:

a. Removal **b. Installation**

INITIAL SETUP

APPLICABLE MODELS
All

MATERIALS/PARTS
Three locknuts

REFERENCES (TM)
TM 9-2320-260-10
TM 9-2320-260-20P

EQUIPMENT CONDITION
- Parking brake set (TM 9-2320-260-10).
- Rear bumperettes removed (para. 10-3).

a. Removal

1. Remove lockpin (4) from retaining pin (5).
2. Remove retaining pin (5) and shackle (3) from bracket (2).
3. Remove three locknuts (7), screws (6), and bracket (2) from crossmember (1). Discard locknuts (7).

b. Installation

1. Install bracket (2) on crossmember (1) with three screws (6) and new locknuts (7).
2. Install shackle (3) on bracket (2) with retaining pin (5) and lockpin (4).

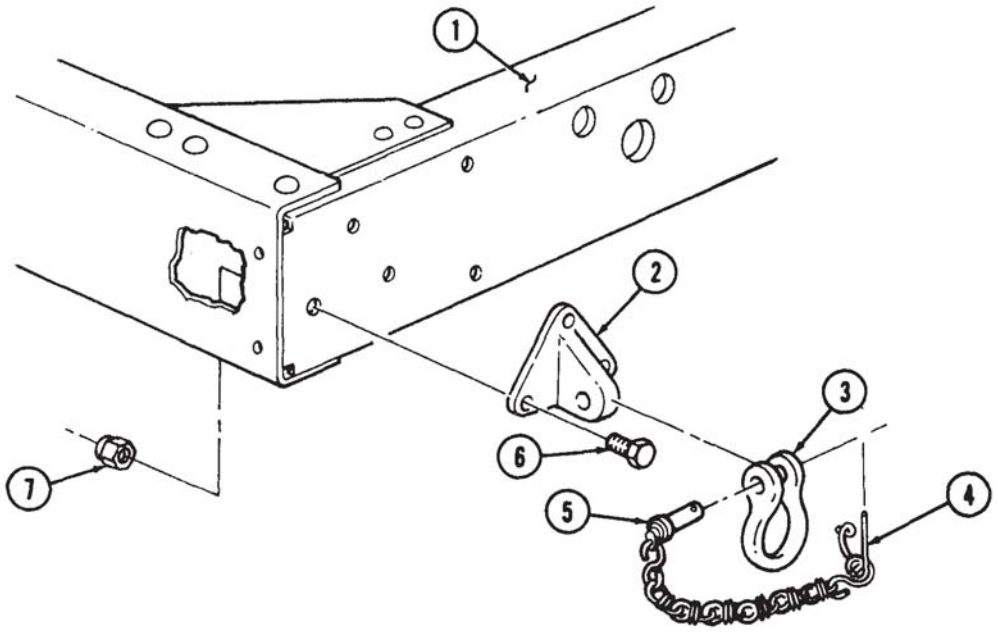

FOLLOW-ON TASK: Install rear bumperettes (para. 10-3).

10-6. FRONT BUMPER STEP REPLACEMENT

THIS TASK COVERS:

a. Removal **b. Installation**

INITIAL SETUP

APPLICABLE MODELS
All

MATERIALS/PARTS
Four locknuts
Two lockwashers

REFERENCES (TM)
TM 9-2320-260-10
TM 9-2320-260-20P

EQUIPMENT CONDITION
Parking brake set (TM 9-2320-260-10).

a. Removal

1. Remove two pinclips (8) and pins (10) from step (9) and bracket (3).
2. Remove two locknuts (5), lockwashers (6), washers (7), screws (11), and step (9) from bracket (3). Discard locknuts (5) and lockwashers (6).
3. Remove two locknuts (1), screws (4), and bracket (3) from bumper (2). Discard locknuts (1).

b. Installation

1. Install bracket (3) on bumper (2) with two screws (4) and new locknuts (1).
2. Install step (9) on bracket (3) with two screws (11), washers (7), new lockwashers (6), and new locknuts (5).
3. Install two pins (10) on step (9) and bracket (3) with two pinclips (8).

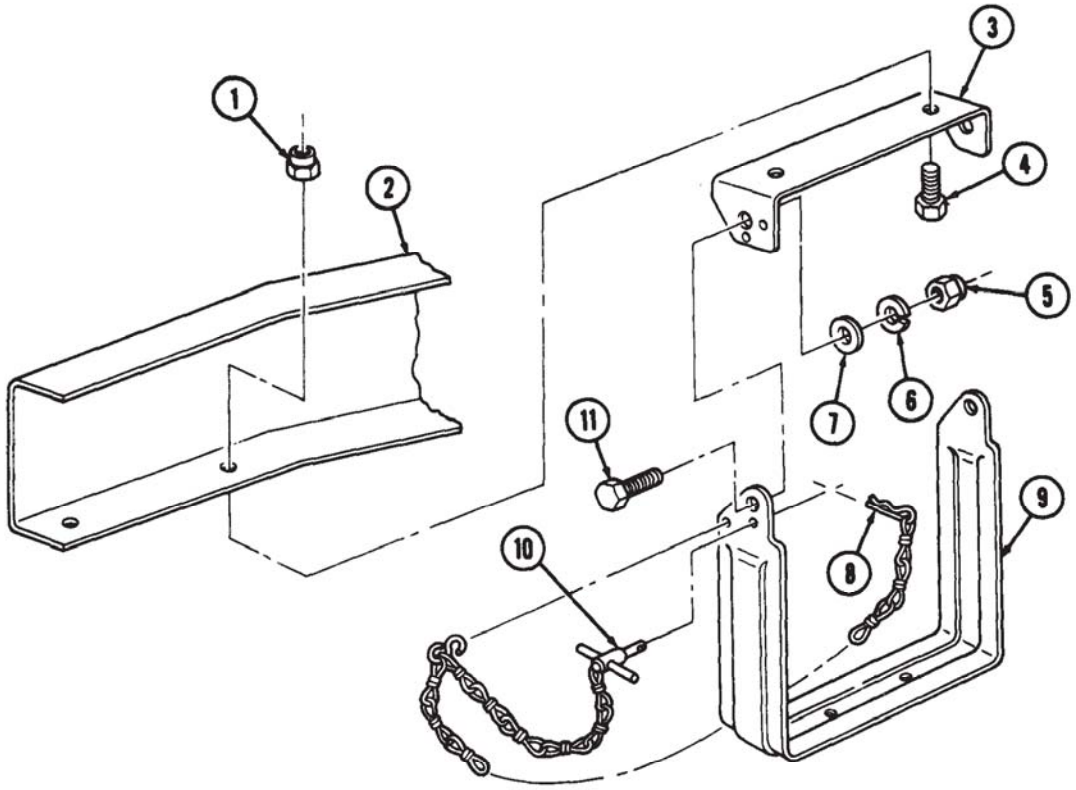

10-7. FRONT BUMPER REPLACEMENT

THIS TASK COVERS:

a. Removal **b. Installation**

INITIAL SETUP

APPLICABLE MODELS
All

MATERIALS/PARTS
Eighteen locknuts

REFERENCES (TM)
TM 9-2320-260-10
TM 9-2320-260-20P

EQUIPMENT CONDITION
- Parking brake set (TM 9-2320-260-10).
- Front lifting shackles removed (para. 10-4).
- Front chock anchor brackets removed (para. 10-8).

a. Removal

NOTE

Assistant will support bumper during step 1.

1. Remove four locknuts (7), screws (1), ten locknuts (8), and screws (9) from bumper (2) and four plates (3). Discard locknuts (7) and (8).

NOTE

Assistant will help with step 2.

2. Remove bumper (2) from four plates (3).
3. Remove four locknuts (5), screws (6), and four plates (3) from two rails (4). Discard locknuts (5).

b. Installation

1. Install four plates (3) on two rails (4) with four screws (6) and new locknuts (5).

NOTE

Assistant will help with step 2.

2. Aline bumper (2) on plates (3) and install with four screws (1), new locknuts (7), ten screws (9), and new locknuts (8).

10-7. FRONT BUMPER REPLACEMENT (Contd)

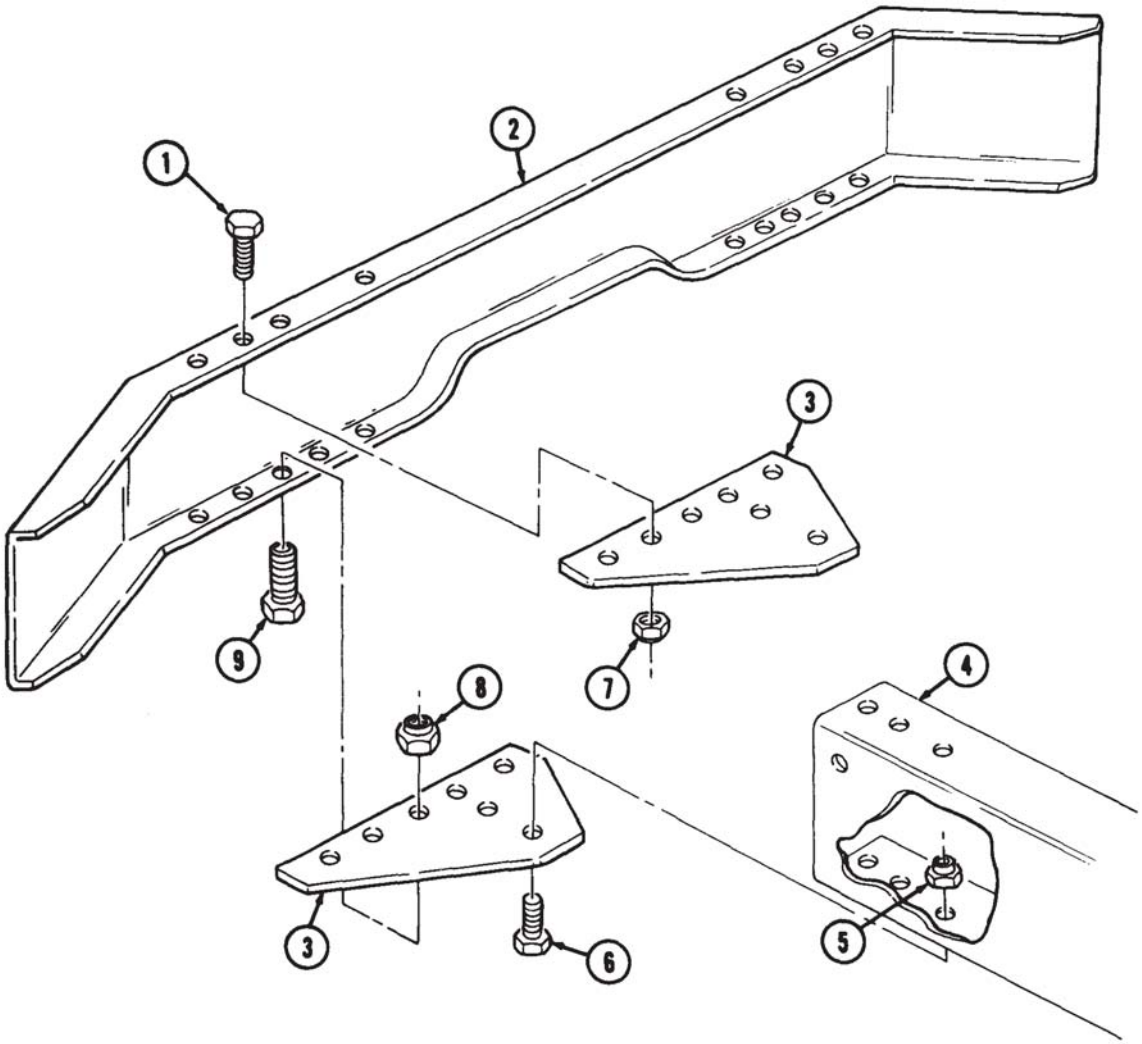

FOLLOW-ON TASKS: • Install front chock anchor brackets (para. 10-8).
• Install front lifting shackles (para. 10-4).

10-8. CHOCK ANCHOR BRACKETS REPLACEMENT

THIS TASK COVERS:

a. Front Chock Anchor Bracket Removal
b. Front Chock Anchor Bracket Installation
c. Rear Chock Anchor Bracket Removal
d. Rear Chock Anchor Bracket Installation
e. Flank Chock Anchor Bracket Removal
f. Flank Chock Anchor Bracket Installation

INITIAL SETUP

APPLICABLE MODELS
M816

MATERIALS/PARTS
Three locknuts (front)
Three locknuts (rear)
Four locknuts (flank)

REFERENCES (TM)
TM 9-2320-260-10
TM 9-2320-260-20P

EQUIPMENT CONDITION
Parking brake set (TM 9-2320-260-10).

a. Front Chock Anchor Bracket Removal

1. Remove locknut (2) and screw (10) from bracket (1) and front chock anchor bracket (8). Discard locknut (2).
2. Remove locknut (3) and screw (9) from rail (7) and front chock anchor bracket (8). Discard locknut (3).
3. Remove locknut (4), washer (5), screw (6), and front chock anchor bracket (8) from rail (7). Discard locknut (4).

b. Front Chock Anchor Bracket Installation

1. Install front chock anchor bracket (8) on rail (7) with screw (6), washer (5), and new locknut (4).
2. Install front chock anchor bracket (8) on rail (7) with screw (9) and new locknut (3).
3. Install screw (10) and new locknut (2) on front chock anchor bracket (8).

c. Rear Chock Anchor Bracket Removal

Remove locknuts (15), (18), and (19), screws (16), (13), and (20), and rear chock anchor bracket (17) from rail (21). Discard locknuts (15), (18), and (19).

d. Rear Chock Anchor Bracket Installation

Install rear chock anchor bracket (17) on rail (21) with screws (16), (13), and (20) and new locknuts (15), (18), and (19).

e. Flank Chock Anchor Bracket Removal

Remove four locknuts (14), screws (11), and flank chock anchor bracket (12) from rail (21). Discard locknuts (14).

f. Flank Chock Anchor Bracket Installation

Install flank chock anchor bracket (12) on rail (21) with four screws (11) and new locknuts (14).

10-8. CHOCK ANCHOR BRACKETS REPLACEMENT (Contd)

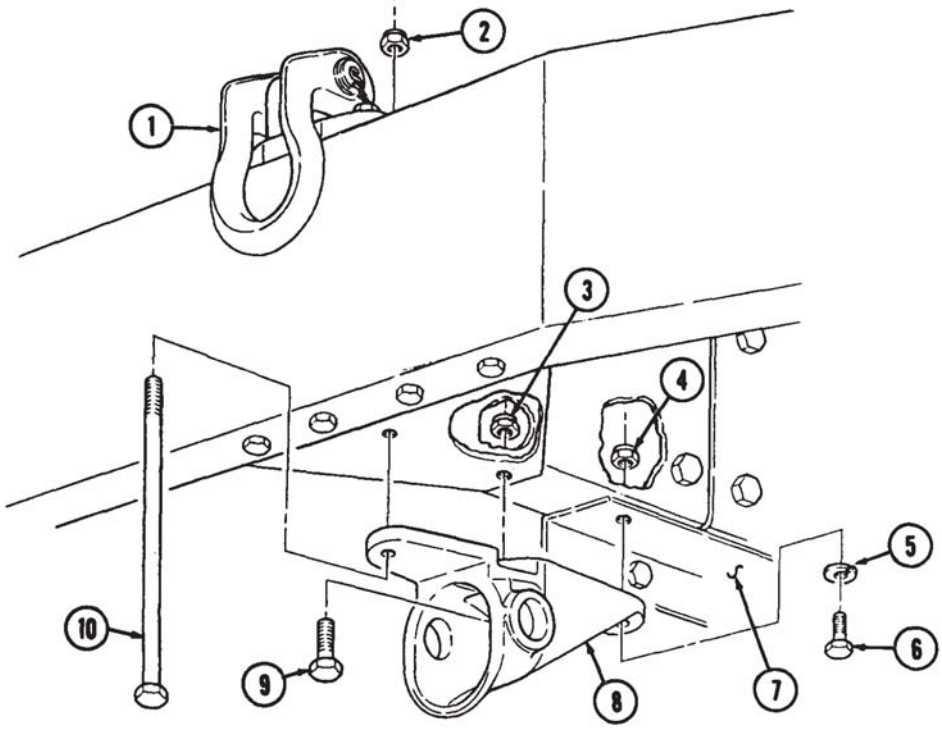

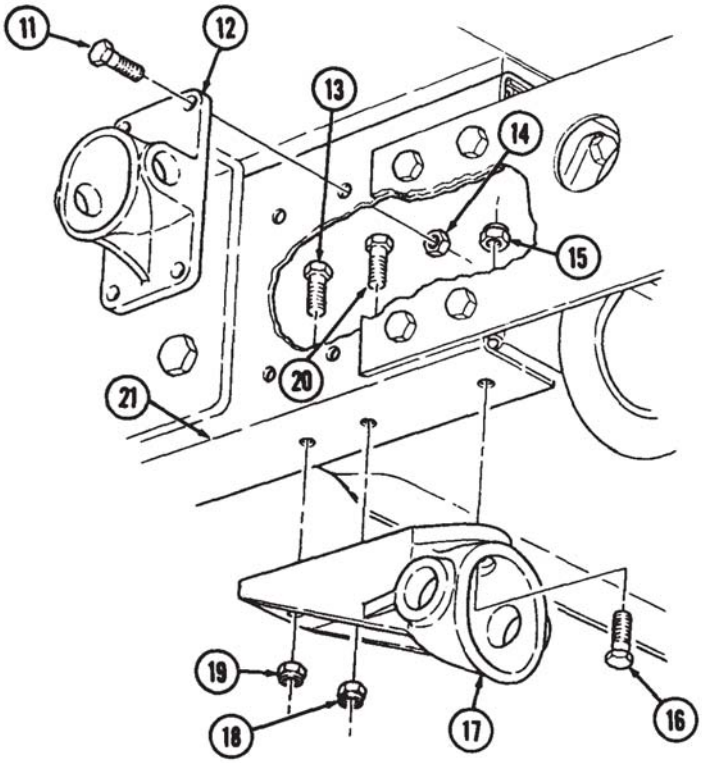

10-9. PINTLE HOOK MAINTENANCE

THIS TASK COVERS:

a. Removal
b. Disassembly
c. Cleaning and Inspection
d. Assembly
e. Installation

INITIAL SETUP

APPLICABLE MODELS
All

MATERIALS/PARTS
Three cotter pins
Drivescrew
Drycleaning solvent (Appendix C, Item 29)
Rags (Appendix C, Item 22)

REFERENCES (TM)
LO 9-2320-260-12
TM 9-2320-260-10
TM 9-2320-260-20P

EQUIPMENT CONDITION
Parking brake set (TM 9-2320-260-10).

GENERAL SAFETY INSTRUCTIONS
Keep fire extinguisher nearby when using drycleaning solvent.

a. Removal

1. Remove cotter pin (2) from nut (1). Discard cotter pin (2).
2. Remove nut (1) and washer (5) from pintle hook (4).

NOTE

Ensure pintle hook latch is closed and secured with cotter pin before performing step 3.

3. Place a bar through pintle hook (4), and using the bar as a handle, remove pintle hook (4) from pintle mount (3).

b. Disassembly

1. Remove drivescrew (14) from pintle hook (16) and chain (15). Discard drivescrew (14).
2. Remove cotter pin (18) from nut (17). Discard cotter pin (18).
3. Remove nut (17) from lubrication screw (13).
4. Remove lubrication screw (13) and pintle hook latch (8) from pintle hook (16).
5. Remove lubrication fitting (12) from lubrication screw (13).
6. Remove spacer (9) from pintle hook latch (8).
7. Remove lubrication fitting (10) from spacer (9).
8. Remove cotter pin (11) and safety latch (6) from pintle hook latch (8).
9. Remove cotter pin (11) from chain (15). Discard cotter pin (11).
10. Remove spring (7) from safety latch (6).

c. Cleaning and Inspection

WARNING

Drycleaning solvent is flammable and will not be used near open flame. Use only in well-ventilated places. Failure to do so may result in injury to personnel.

10-9. PINTLE HOOK MAINTENANCE (Contd)

1. Clean all parts with drycleaning solvent, then dry each part with a clean rag.
2. Inspect all parts for breaks and cracks.
3. Inspect spring (7) for collapsed coils or other damage.
4. Replace all damaged or missing parts.

d. Assembly

1. Install spring (7) on safety latch (6).
2. Install new cotter pin (11) on chain (15).
3. Install safety latch (6) on pintle hook latch (8) with new cotter pin (11).
4. Install lubrication fitting (10) on spacer (9).
5. Install lubrication fitting (12) on lubrication screw (13).
6. Install pintle hook latch (8) on pintle hook (16) with lubrication screw (13), nut (17), and new cotter pin (18).
7. Install new drivescrew (14) on chain (15) and pintle hook (16).

e. Installation

Install pintle hook (4) on pintle mount (3) with washer (5), nut (1), and new cotter pin (2).

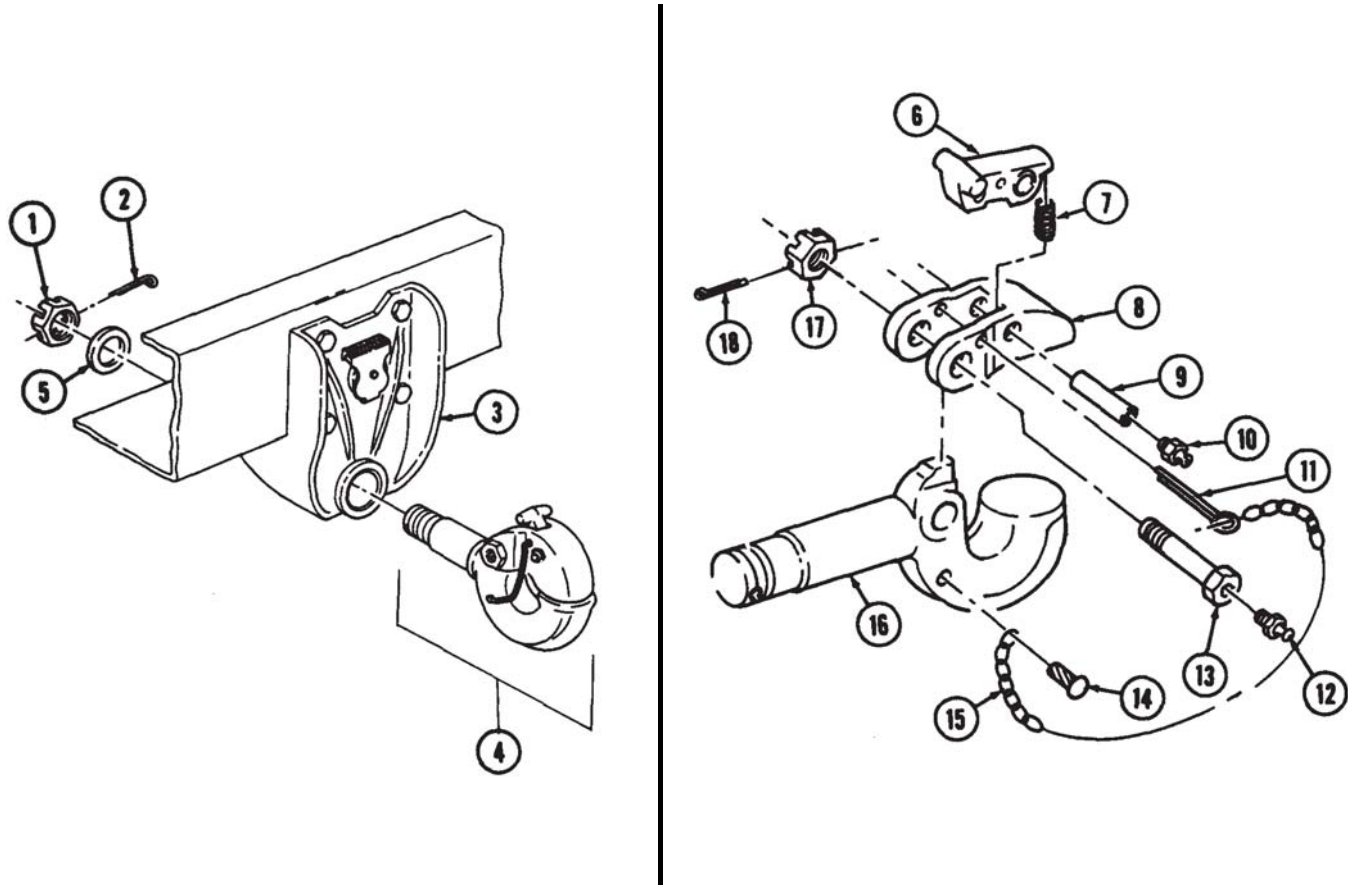

FOLLOW-ON TASK: Lubricate pintle hook (LO 9-2320-260-12).

10-10. PINTLE MOUNT REPLACEMENT [ALL EXCEPT M818)

THIS TASK COVERS:

a. Removal **b. Installation**

INITIAL SETUP

APPLICABLE MODELS
All (except M818)

MATERIALS/PARTS
Twenty-four locknuts

REFERENCES (TM)
TM 9-2320-260-10
TM 9-2320-260-20P

EQUIPMENT CONDITION
- Parking brake set (TM 9-2320-260-10).
- Pintle hook removed (para. 10-9).

NOTE

Procedure for removal and installation of pintle mount is basically the same for all models. This procedure covers the M819.

a. Removal

1. Remove eight locknuts (7), screws (11), and two reinforcement brackets (8) from braces (10) and (21) and rails (13). Discard locknuts (7).
2. Remove four locknuts (15) and screws (5) from reinforcement bracket (1) and crossmember (14).
3. Remove two locknuts (9) and screws (12) from braces (10) and (21) and rails (13). Discard locknuts (9).
4. Remove four locknuts (2) and screws (19) from reinforcement bracket (1), two braces (10), pintle mount (18), and crossmember (14). Discard locknuts (2).
5. Remove two locknuts (16) and (17), screws (3) and (4), and pintle mount (18) from reinforcement bracket (1) and crossmember (14). Discard locknuts (16) and (17).
6. Remove four locknuts (20), screws (6), and reinforcement bracket (1) from braces (10) and (21). Discard locknuts (20).

b. Installation

1. Install two braces (10) and (21) on reinforcement bracket (1) with four screws (6) and new locknuts (20).
2. Install pintle mount (18) on crossmember (14) and reinforcement bracket (1) with four screws (3) and (4) and new locknuts (16) and (17).
3. Install pintle mount (18) on two braces (10), crossmember (14), and reinforcement bracket (1) with four screws (19) and new locknuts (2).
4. Install two reinforcement brackets (8) on two braces (10) and rails (13) with eight screws (11) and new locknuts (7).
5. Install four screws (5) on reinforcement bracket (1) and crossmember (14) with four new locknuts (15).
6. Install two screws (12) on two braces (10) and rail (13) with two new locknuts (9).

10-10. PINTLE MOUNT REPLACEMENT (ALL EXCEPT M818) (Contd)

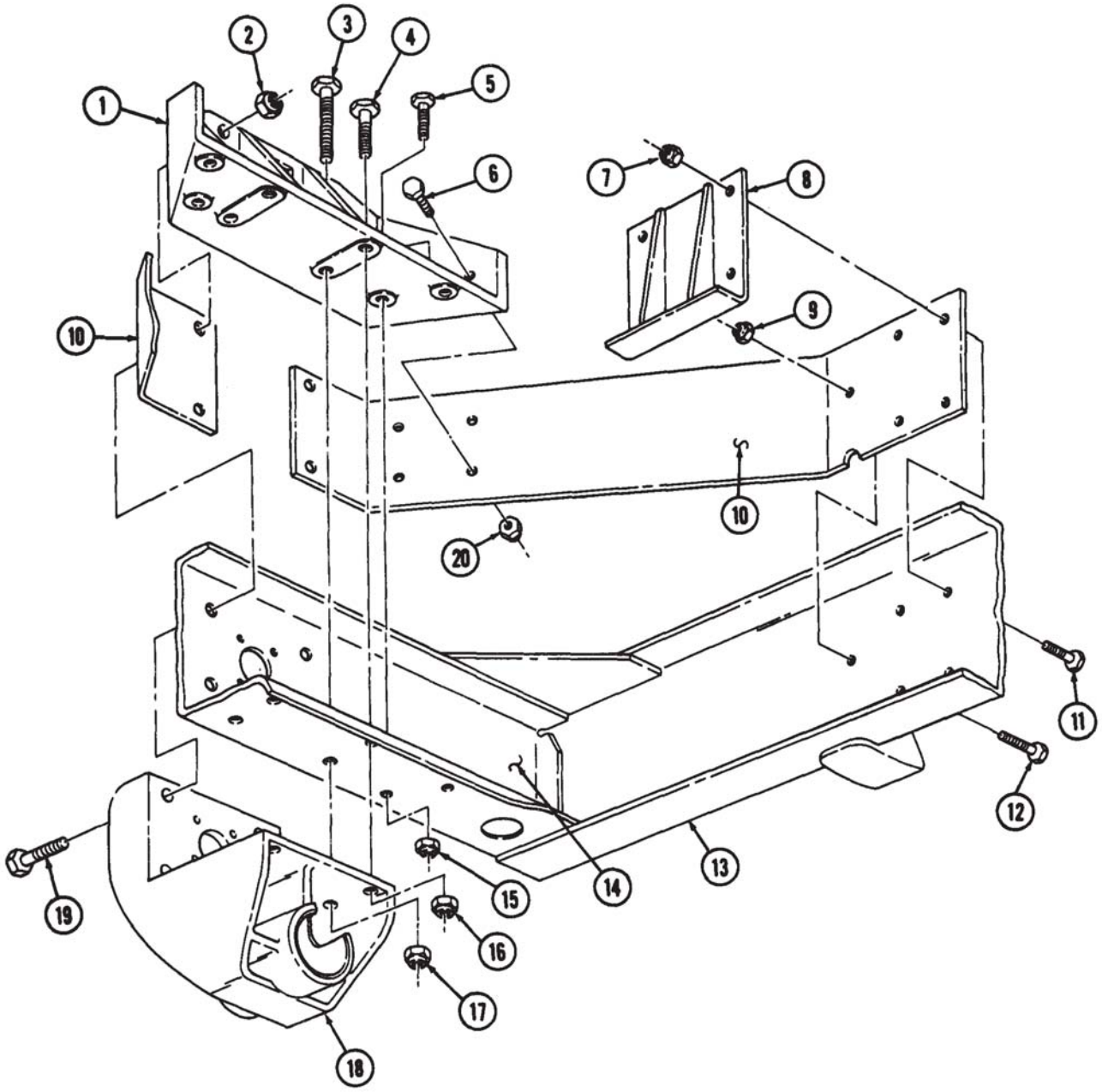

FOLLOW-ON TASK: Install pintle hook (para. 10-9).

10-11. PINTLE MOUNT REPLACEMENT (M818)

THIS TASK COVERS:

a. Removal **b. Installation**

INITIAL SETUP

APPLICABLE MODELS

M818

MATERIALS/PARTS

Eighteen locknuts

REFERENCES (TM)

TM 9-2320-260-10
TM 9-2320-260-20P

EQUIPMENT CONDITION

- Parking brake set (TM 9-2320-260-10).
- Pintle hook removed (para. 10-9).

a. Removal

1. Remove four locknuts (17) and screws (8) from reinforcement brackets (14) and braces (5). Discard locknuts (17).
2. Remove two locknuts (10) and (11), screws (15) and (16), pintle mount (12), and two reinforcement brackets (14) from crossmember (18). Discard locknuts (10) and (11).
3. Remove four locknuts (9) and screws (13) from two braces (5) and crossmember (18).
4. Remove two locknuts (6), four locknuts (7), two screws (3), four screws (1), two braces (5), and frame brackets (2) from rails (4). Discard locknuts (6) and (7).

b. Installation

1. Install two braces (5) and frame brackets (2) on rails (4) with two screws (3), four screws (1), two new locknuts (6), and four new locknuts (7).
2. Install pintle mount (12) on two braces (5) and crossmember (18) with four screws (13) and new locknuts (9).
3. Install pintle mount (12) on crossmember (18) and two reinforcement brackets (14) with screws (15) and (16) and new locknuts (10) and (11).
4. Install two reinforcement brackets (14) on braces (5) with four screws (8) and new locknuts (17).

10-11. PINTLE MOUNT REPLACEMENT (M818) (Contd)

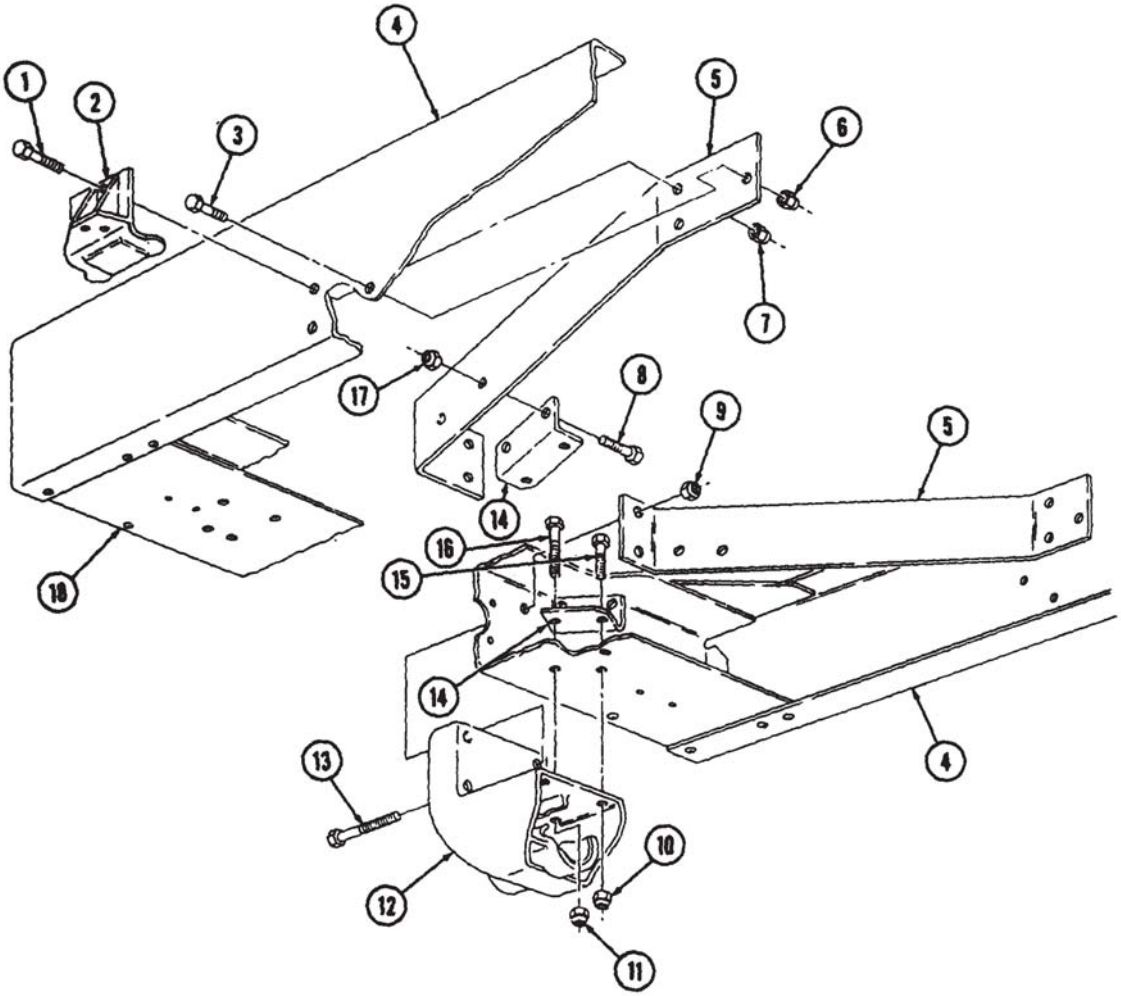

FOLLOW-ON TASK: Install pintle hook (para. 10-9).

10-12. FIFTH WHEEL REPLACEMENT (M815)

THIS TASK COVERS:

a. Removal **b. Installation**

INITIAL SETUP

APPLICABLE MODELS
M815

MATERIALS/PARTS
Eight locknuts
Two wood sills
Eight wood wedges

PERSONNEL REQUIRED
Two

REFERENCES (TM)
LO 9-2320-260-12
TM 9-2320-260-10
TM 9-2320-260-20P

EQUIPMENT CONDITION
- Parking brake set (TM 9-2320-260-10).
- Bolster removed (para. 12-69).

GENERAL SAFETY INSTRUCTIONS
All personnel must stand clear during lifting operations.

a. Removal

1. Install chains on fifth wheel (1).
2. Position lifting device over fifth wheel (1).
3. Install chains on lifting device.
4. Remove eight locknuts (2), four U-bolts. (6), and wood wedges (4) from two rails (3) and fifth wheel (1). Discard wood wedges (4) and locknuts (2).

WARNING

All personnel must stand clear during lifting operations. A swinging or shifting load may cause injury or death to personnel.

5. Raise fifth wheel (1) away from vehicle, then lower fifth wheel (1) onto a pallet for transport.
6. Remove chains from lifting device and fifth wheel (1).
7. Remove four rail reinforcement brackets (5) and two wood sills (7) from rails (3). Discard wood sills (7).

b. Installation

1. Position four rail reinforcement brackets (5) and two wood sills (7) on rails (3).
2. Install chains on fifth wheel (1).
3. Position lifting device over fifth wheel (1).
4. Install chains on lifting device.

10-12. FIFTH WHEEL REPLACEMENT (M815) (Contd)

WARNING

All personnel must stand clear during lifting operations. A swinging or shifting load may cause injury or death to personnel.

6. Raise fifth wheel (1) away from pallet and position fifth wheel (1) over vehicle.
6. Lower fifth wheel (1) onto wood sills (7).
7. Install four U-bolts (6) on two rails (3) and fifth wheel (1) with four wood wedges (4) and eight new locknuts (2).
8. Remove chains from lifting device and fifth wheel (1).

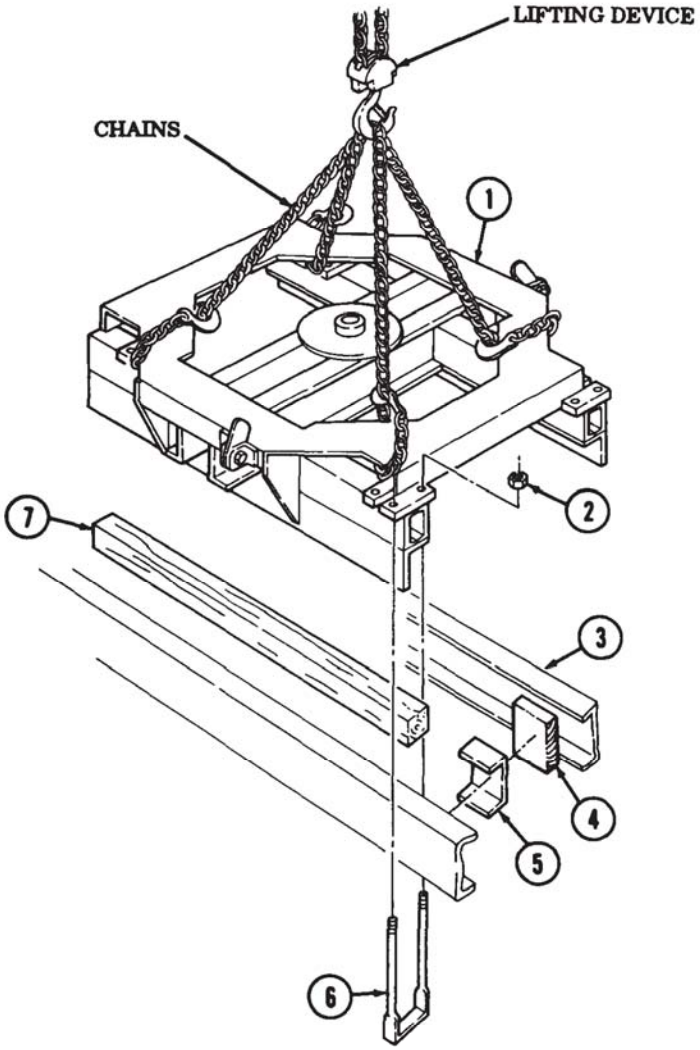

FOLLOW-ON TASKS: • Install bolster (para. 12-69).
• Lubricate fifth wheel (LO 9-2320-260-12).

10-13. FIFTH WHEEL REPLACEMENT (M818)

THIS TASK COVERS:

a. Removal **b. Installation**

INITIAL SETUP

APPLICABLE MODELS
M818

MATERIALS/PARTS
Ten lockwashers

PERSONNEL REQUIRED
Two

REFERENCES (TM)
LO 9-2320-260-12
TM 9-2320-260-10
TM 9-2320-260-20P

EQUIPMENT CONDITION
Parking brake set (TM 9-2320-260-10).

GENERAL SAFETY INSTRUCTIONS
All personnel must stand clear during lifting operations.

a. Removal

1. Install chain on fifth wheel (5) with two screws (10), washers (4) and (2), and nuts (3).
2. Position lifting device over fifth wheel (5).
3. Install chain to lifting device.
4. Remove ten screws (1) and lockwashers (11) from fifth wheel (5) and two support plates (7). Discard lockwashers (11).

WARNING

All personnel must stand clear during lifting operations. A swinging or shifting load may cause inquiry or death to personnel.

5. Raise fifth wheel (5) away from vehicle and lower fifth wheel (5) onto a pallet for transport.
6. Remove two nuts (3), washers (2) and (4), screws (10), and chain from fifth wheel (5).

b. Installation

1. Install chain on fifth wheel (5) with two screws (10), washers (4) and (2), and nuts (3).
2. Position lifting device over fifth wheel (5).
3. Install chain to lifting device.

WARNING

All personnel must stand clear during lifting operations. A swinging or shifting load may cause injury or death to personnel.

4. Raise fifth wheel (5) away from pallet and position fifth wheel (5) over vehicle.
5. Install fifth wheel (5) on two support plates (7) with ten new lockwashers (11) and screws (1).
6. Remove two nuts (3), washers (2) and (4), screws (10), and chain from fifth wheel (5).

10-13. FIFTH WHEEL REPLACEMENT (M818) (Contd)

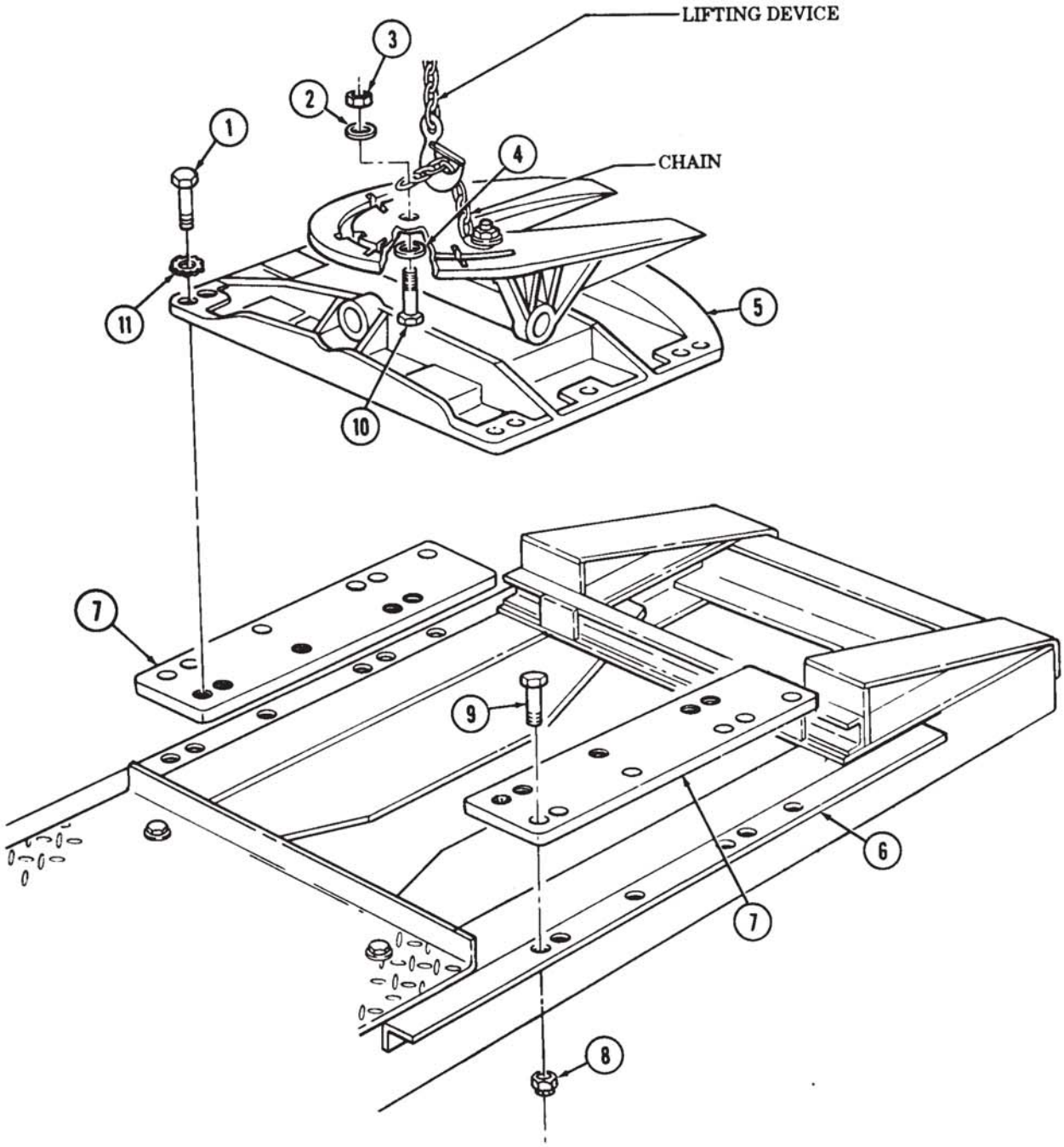

FOLLOW-ON TASK: Lubricate fifth wheel (LO 9-2320-260-12).

10-14. FIFTH WHEEL REPLACEMENT (M819]

THIS TASK COVERS:

a. Removal **b. Installation**

INITIAL SETUP

APPLICABLE MODELS
M819

MATERIALS/PARTS
Ten locknuts

PERSONNEL REQUIRED
Two

REFERENCES (TM)
LO 9-2320-260-12
TM 9-2320-260-10
TM 9-2320-260-20P

EQUIPMENT CONDITION
Parking brake set (TM 9-2320-260-10).

GENERAL SAFETY INSTRUCTIONS
All personnel must stand clear during lifting operations.

a. Removal

1. Install chain on fifth wheel (1) with two screws (2), two washers (3) and (4), and two nuts (5).
2. Position lifting device over fifth wheel (1).
3. Install chain on lifting device.
4. Remove ten locknuts (7), washers (8), and screws (9) from fifth wheel (1) and two rails (6). Discard locknuts (7).

WARNING

All personnel must stand clear during lifting operations. A swinging or shifting load may cause injury or death to personnel.

5. Raise fifth wheel (1) away from vehicle, then lower fifth wheel (1) onto a pallet for transport.
6. Remove two nuts (5), two washers (3) and (4), two screws (2), and chain from fifth wheel (1).

b. Installation

1. Install chain on fifth wheel (1) with two screws (2), two washers (3) and (4), and two nuts (5).
2. Position lifting device over fifth wheel (1).
3. Install chain on lifting device.

WARNING

All personnel must stand clear during lifting operations. A swinging or shifting load may cause inqiury or death to personnel.

4. Raise fifth wheel (1) away from pallet and position fifth wheel (1) over vehicle.
5. Lower fifth wheel (1) and install fifth wheel (1) on two rails (6) with ten screws (9), washers (8), and new locknuts (7).
6. Remove two nuts (5), washers (3) and (4), screws (2), and chain from fifth wheel (1).

10-14. FIFTH WHEEL REPLACEMENT (M819) (Contd)

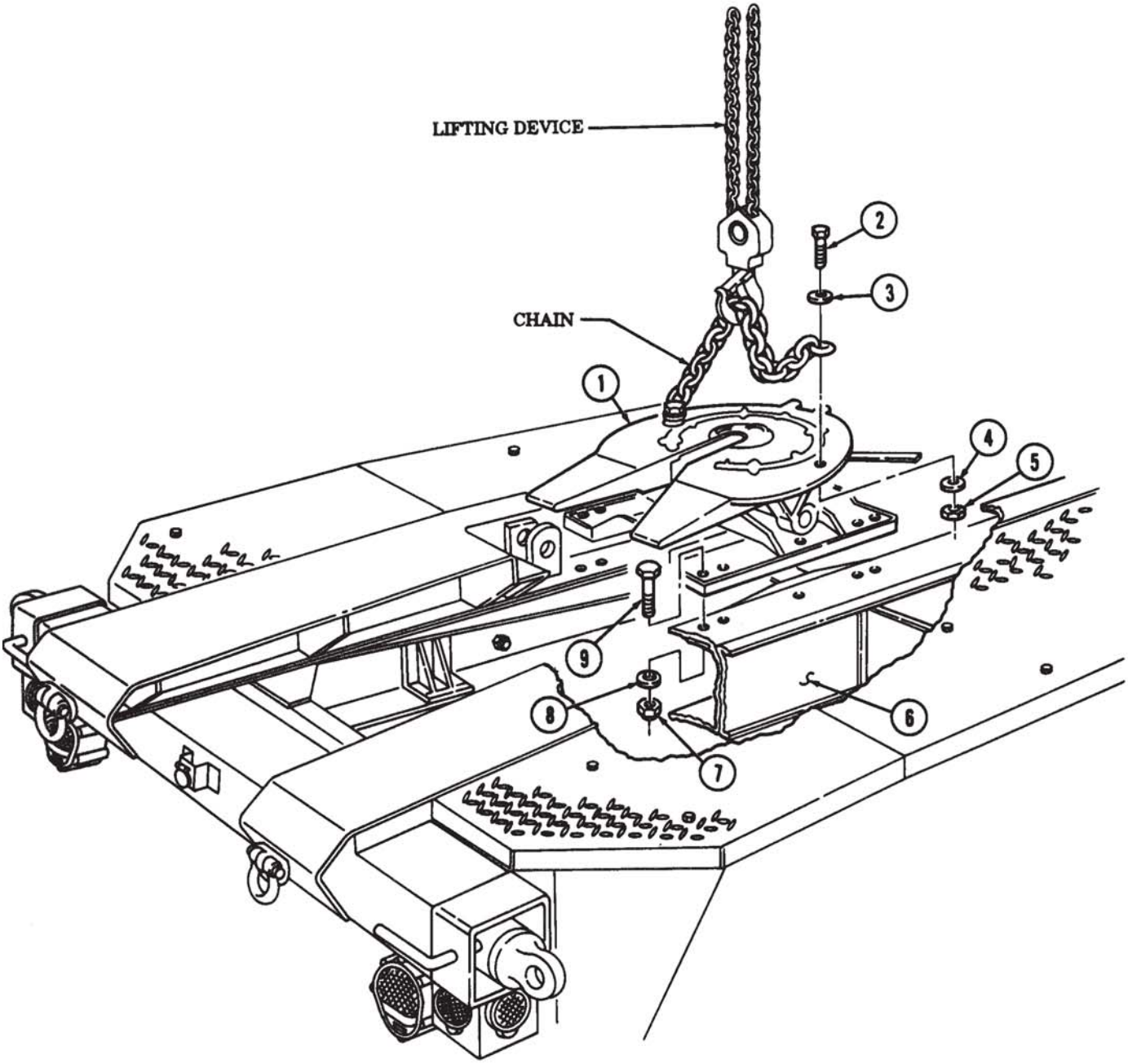

FOLLOW-ON TASK: Lubricate fifth wheel (LO 9-2320-260-12).

CHAPTER 11
BODY, CAB, AND ACCESSORIES MAINTENANCE

Section I. Body and Cab Maintenance (page 11-1)
Section II. Accessory Items Maintenance (page 11-67)

Section I. BODY AND CAB MAINTENANCE

11-1. BODY AND CAB MAINTENANCE INDEX

PARA No.	TITLE	PAGE NO.
11-2.	Hood Replacement	11-2
11-3.	Hood Fasteners Replacement	11-4
11-4.	Hood Hinges Replacement	11-6
11-5.	Brushguard and Stoneguard Replacement	11-7
11-6.	Left Side Panel Replacement	11-8
11-7.	Right Side Panel Maintenance	11-10
11-8.	Right Headlight Bracket Replacement	11-14
11-9.	Left Headlight Bracket Replacement	11-16
11-10.	Right Fender Replacement	11-18
11-11.	Left Fender Replacement	11-20
11-12.	Cab Door Access Cover Replacement	11-28
11-13.	Cab Door Dovetail Wedge Replacement	11-29
11-14.	Cab Door Catch Replacement	11-30
11-15.	Cab Handles Replacement	11-31
11-16.	Cab Door and Hinges Replacement	11-32
11-17.	Cab Door Glass and Weatherseal Maintenance	11-34
11-18.	Cab Door Window Regulator and Handle Replacement	11-36
11-19.	Cab Door Handles and Luck Replacement	11-38
11-20.	Cab Door Weatherseals Replacement	11-40
11-21.	Cab Cowl Vent Maintenance	11-42
11-22.	Cab Door Check Rod Replacement	11-44
11-23.	Cab Reinforcement Panel Replacement	11-45
11-24.	Machine Gun Mount Bracket Replacement	11-46
11-25.	Steering Gear Shield Replacement	11-47
11-26.	Power Steering Assist Cylinder Front and Side Shields Replacement	11-48
11-27.	Windshield Arm, Glass, and Handle Replacement	11-50
11-28.	Windshield Replacement	11-52
11-29.	Under Cab Toolbox Replacement	11-54
11-30.	Cab Tunnels Replacement	11-56

11-1. BODY AND CAB MAINTENANCE INDEX (Contd)

PARA. NO.	TITLE	PAGE NO.
11-31.	Companion Seat Maintenance	11-58
11-32.	Driver's Seat Replacement	11-62
11-33.	Glove Compartment Replacement	11-63
11-34.	Driver's Seat Cushion, Backrest, Frame, and Seat Adjuster Replacement	11-64
11-35.	Cab Soft Top Turnbuttons and Lashing Hooks Replacement	11-66

11 -2. HOOD REPLACEMENT

THIS TASK COVERS:

a. Removal **b. Installation**

INITIAL SETUP

APPLICABLE MODELS
All

MATERIALS/PARTS
Twenty-two locknuts

REFERENCES (TM)
TM 9-2320-260-10
TM 9-2320-260-20P

EQUIPMENT CONDITION
- Parking brake set (TM 9-2320-260-10).
- Hood raised and secured (TM 9-2320-260-10).

1. Remove eight locknuts (3), screws (1), and two hinges (2) from hood (4). Remove hood (4) from vehicle. Discard locknuts (3).
2. Remove eight locknuts (14), screws (5), two reinforcements (15), fasteners (6), and brackets (16) from hood (4). Discard locknuts (14).
3. Remove two locknuts (10), screws (7), and safety latch (9) from hood (4). Discard locknuts (10).
4. Remove four locknuts (13), washers (12), nuts (11), and two brackets (8) from hood (4). Discard locknuts (13).

1. Install two brackets (8) on hood (4) with four nuts (11), washers (12), and new locknuts (13).
2. Install safety latch (9) on hood (4) with two screws (7) and new locknuts (10).
3. Install two fasteners (6) and brackets (16) on hood (4) with two reinforcements (15), eight screws (5), and new locknuts (14).
4. Place hood (4) on vehicle and install on two hinges (2) with eight screws (1) and new locknuts (3).

11-2. HOOD REPLACEMENT (Contd)

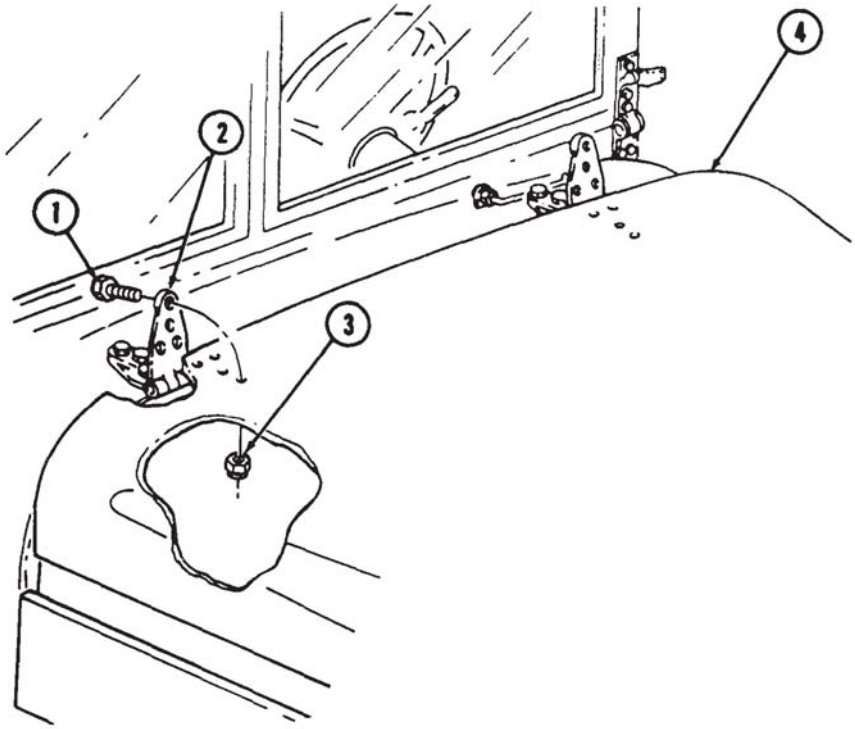

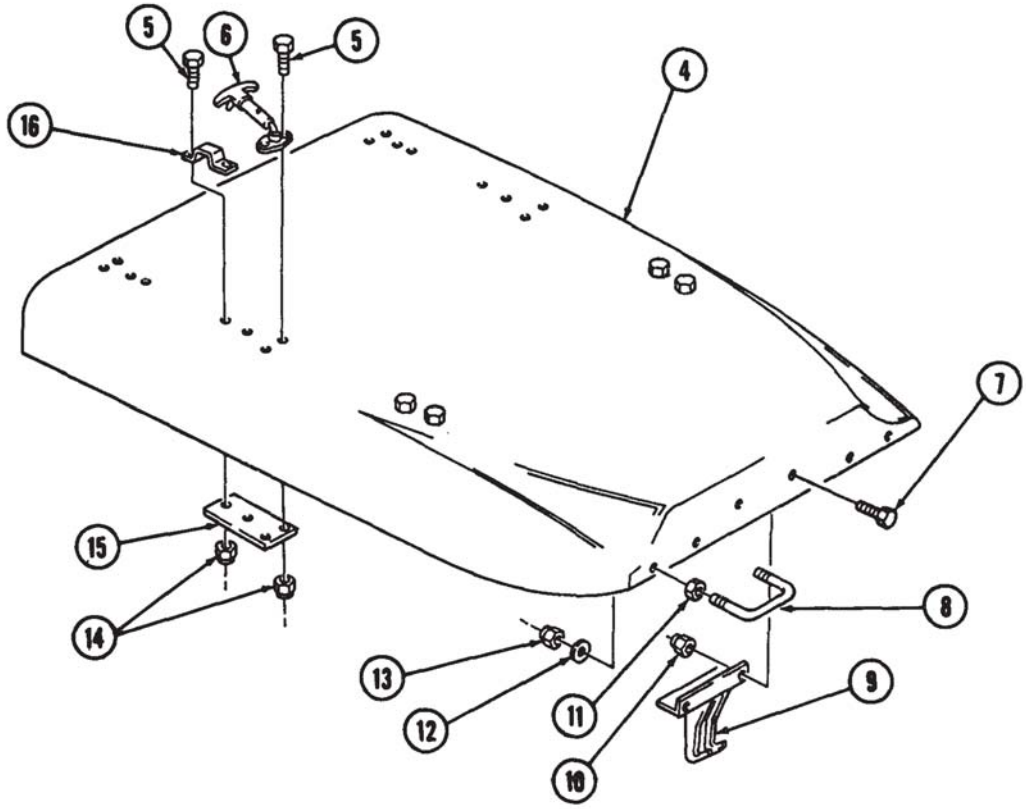

11-3. HOOD FASTENERS REPLACEMENT

THIS TASK COVERS:

a. Hood Holddown Fastener and Bracket Removal
b. Safety Latch Removal
c. Hood Support Hook Removal
d. Hood Support Hook Installation
e. Safety Latch Installation
f. Hood Holddown Fastener and Brackets Installation

INITIAL SETUP

APPLICABLE MODELS
All

MATERIALS/PARTS
Twelve locknuts

REFERENCES (TM)
TM 9-2320-260-10
TM 9-2320-260-20P

EQUIPMENT CONDITION
Parking brake set (TM 9-2320-260-10).

a Hood Holddown Fastener and Bracket Removal

1. Unlatch two fasteners (16) from brackets (15).
2. Raise and secure hood (8) (TM 9-2320-260-10).
3. Remove four locknuts (11), screws (17), and two fasteners (16) from brushguard (19). Discard locknuts (11).
4. Remove four locknuts (12), washers (13), and two brackets (15) from hood (8). Discard locknuts (12).
5. Remove four nuts (14) from two brackets (15).

b. Safety Latch Removal

Remove two locknuts (9), screws (18), and safety latch (10) from hood (8). Discard locknuts (9).

c. Hood Support Hook Removal

1. Lower hood (8).
2. Remove hook (5) from clip (7).
3. Remove screw (6) and clip (7) from cowling (20).
4. Remove locknut (1), washer (2), nut (4), and hook (5) from bolt (3). Discard locknut (1).
5. Remove glove compartment (para. 11-33).

NOTE

Assistant will help with step 6.

6. Remove locknut (21) and bolt (3) from cowling (20), Discard locknut (21).

d. Hood Support Hook Installation

NOTE

Assistant will help with step 1.

1. Install nut (4), bolt (3), washer (2), and new locknut (1) on hook (5). Install assembled hook (5) on cowling (20) with new locknut (21).
2. Install glove compartment (para. 11-33).
3. Install clip (7) on cowling (20) with screw (6).
4. Install hook (5) on clip (7).

11-3. HOOD FASTENERS REPLACEMENT (Contd)

e. Safety Latch Installation

1. Raise and secure hood (8) (TM 9-2320-260-10).
2. Install safety latch (10) on hood (8) with two screws (18) and new locknuts (9).

f. Hood Holddown Fastener and Bracket Installation

1. Install four nuts (14) tightly against threaded ends of two brackets (15).
2. Install two brackets (15) on hood (8) with four washers (13) and new locknuts (12).
3. Install two fasteners (16) on brushguard (19) with four screws (17) and new locknuts (11).
4. Lower hood (8).
5. Latch two fasteners (16) on brackets (15).

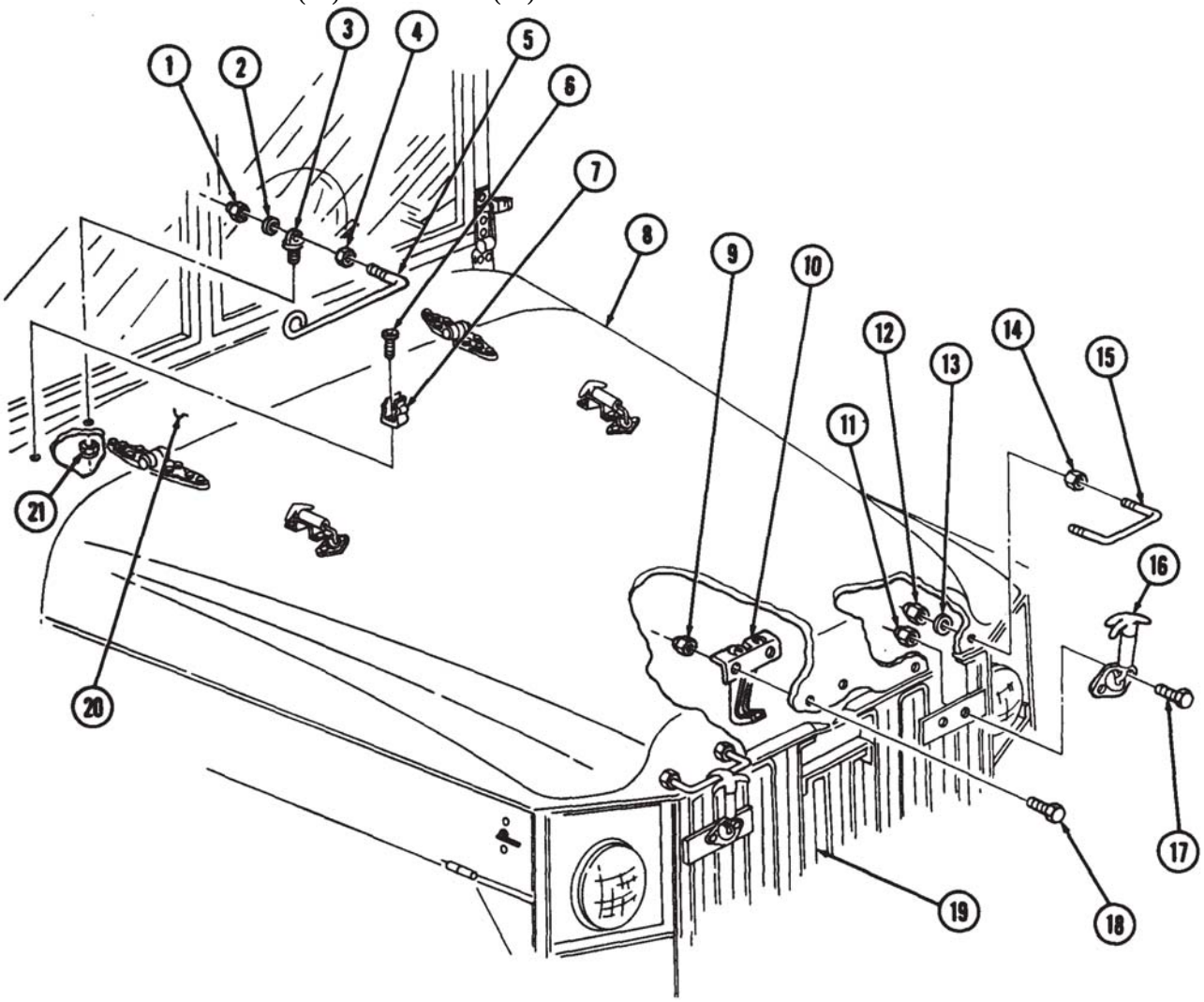

11-4. HOOD HINGES REPLACEMENT

THIS TASK COVERS:

a. Removal **b. Installation**

INITIAL SETUP

APPLICABLE MODELS
All

MATERIALS/PARTS
Eight locknuts

REFERENCES (TM)
TM 9-2320-260-10
TM 9-2320-260-20P

EQUIPMENT CONDITION
- Parking brake set (TM 9-2320-260-10).
- Hood raised and secured (TM 9-2320-260-10).
- Glove compartment removed (para. 11-33).
- Personnel heater ducts removed (para. 14-8).

GENERAL SAFETY INSTRUCTIONS
Keep fingers clear of hood when replacing hinge.

WARNING

Keep fingers clear of hood and cowling when replacing hinge. Failure to do so may result in injury to personnel.

NOTE

Left and right hood hinges are replaced the same way. This procedure covers the right side only.

a. Removal

Remove eight locknuts (5), screws (2), and hinge (1) from hood (4) and cowling (3). Discard locknuts (5).

b. Installation

Install hinge (1) on hood (4) and cowling (3) with eight screws (2) and new locknuts (5).

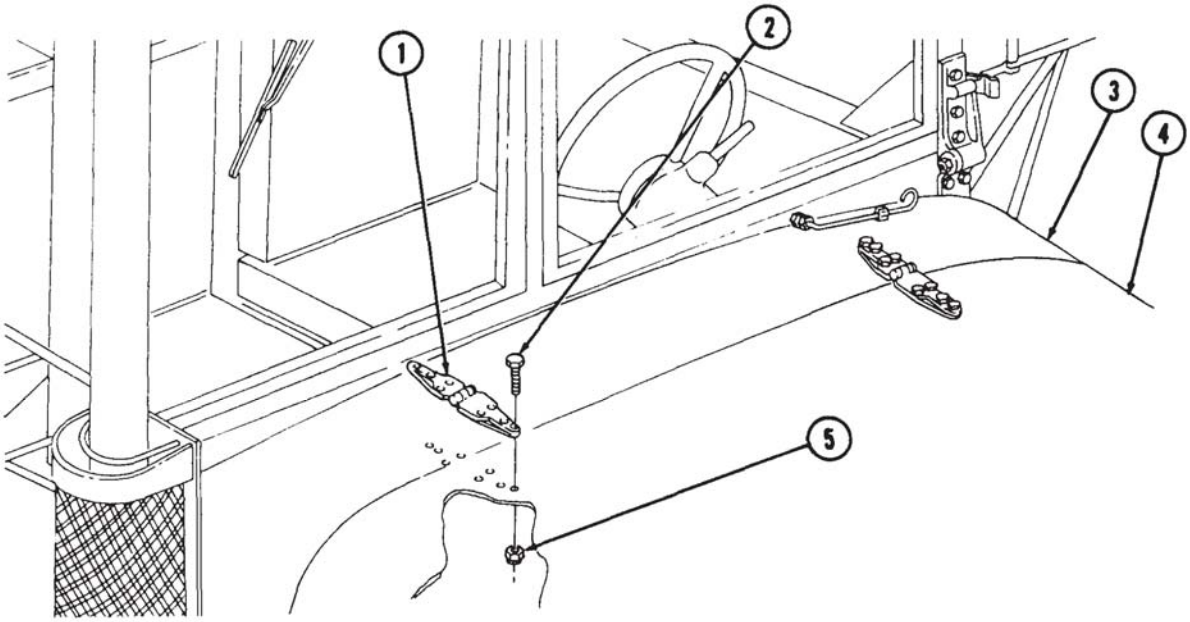

FOLLOW-ON TASKS:
- Install glove compartment (para. 11-33).
- Install personnel heater ducts (para. 14-8).

11-5. BRUSHGUARD AND STONEGUARD REPLACEMENT

THIS TASK COVERS:

a. Removal **b. Installation**

INITIAL SETUP

APPLICABLE MODELS
All

MATERIALS/PARTS
Nine locknuts

REFERENCES (TM)
TM 9-2320-260-10
TM 9-2320-260-20P

EQUIPMENT **CONDITION**
- Parking brake set (TM 9-2320-260-10).
- Hood raised and secured (TM 9-2320-260-10).

a. Removal

1. Remove two locknuts (14), washers (13), and screws (7) from brushguard (2) and two arms (5). Discard locknuts (14).
2. Remove two locknuts (12), washers (11), screws (9), and brushguard (2) from two brackets (8). Discard locknuts (12).
3. Remove five locknuts (1) and (10), screws (4) and (6), and stoneguard (3) from brushguard (2). Discard locknuts (1) and (10).

b. Installation

1. Install stoneguard (3) on brushguard (2) with five screws (4) and (6) and new locknuts (1) and (10).
2. Install brushguard (2) on two brackets (8) with two screws (9), washers (11), and new locknuts (12).
3. Install brushguard (2) on two arms (5) with two screws (7), washers (13), and new locknuts (14).

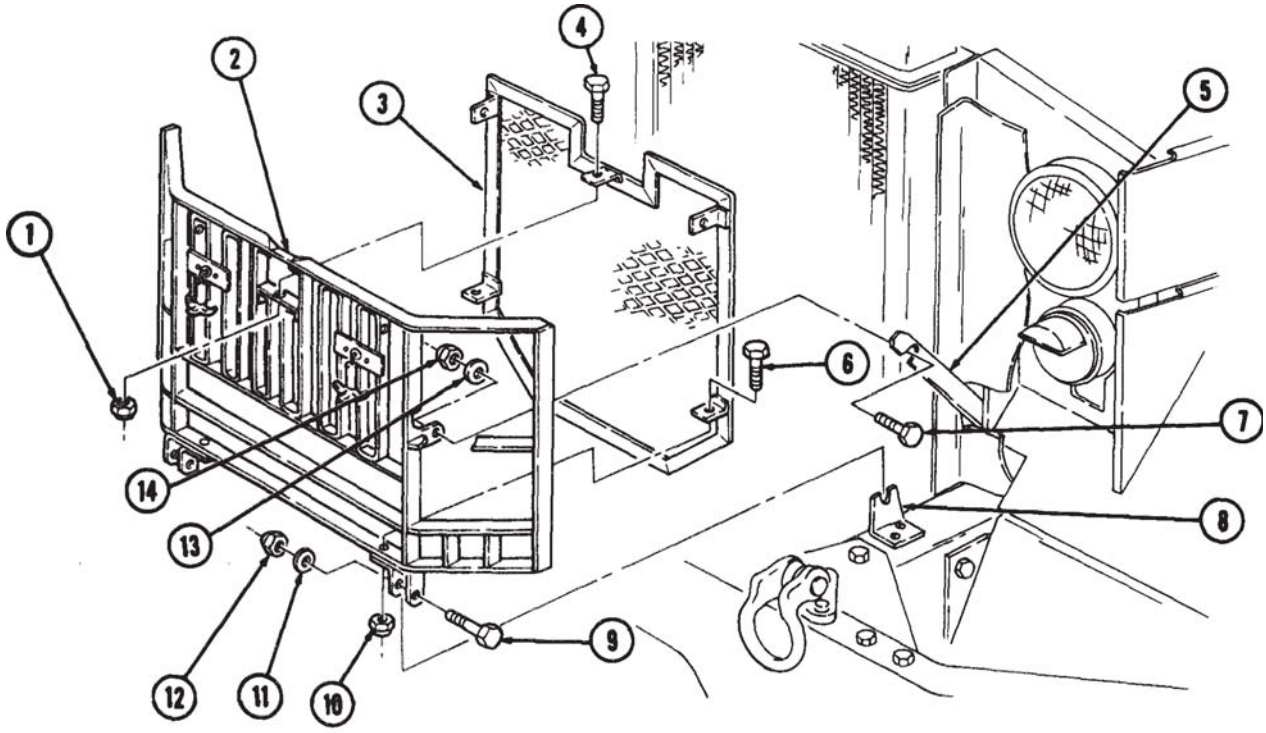

11-6. LEFT SIDE PANEL REPLACEMENT

THIS TASK COVERS:

a. Removal **b. Installation**

INITIAL SETUP

APPLICABLE MODELS
All

MATERIALS/PARTS
Eight locknuts

REFERENCES (TM)
TM 9-2320-260-10
TM 9-2320-260-20P

EQUIPMENT CONDITION
- Parking brake set (TM 9-2320-260-10).
- Hood raised and secured (TM 9-2320-260-10).

a. Removal

1. Remove two clamps (11), elbow (9), and tube (8) from air cleaner (12), side panel (6), and hump hose (13).
2. Remove two locknuts (15), washers (1), screws (2), and washers (1) from bracket (10) and side panel (6). Discard locknuts (15).
3. Remove two locknuts (15), washers (1), screws (2), washers (1), and side panel (6) from headlight panel (14). Discard locknuts (15).
4. Remove four locknuts (3), retainer (4), seal (5), and four screws (7) from side panel (6). Discard locknuts (3).

b. Installation

1. Install seal (5) on side panel (6) with retainer (4), four screws (7), and new locknuts (3).
2. Install side panel (6) on headlight panel (14) with two washers (1), screws (2), washers (1), and new locknuts (15).
3. Install side panel (6) on bracket (10) with two washers (1), screws (2), washers (1), and new locknuts (15).
4. Install elbow (9) and tube (8) on air cleaner (12), side panel (6), and hump hose (13) with two clamps (11).

11-6. LEFT SIDE PANEL REPLACEMENT (Contd)

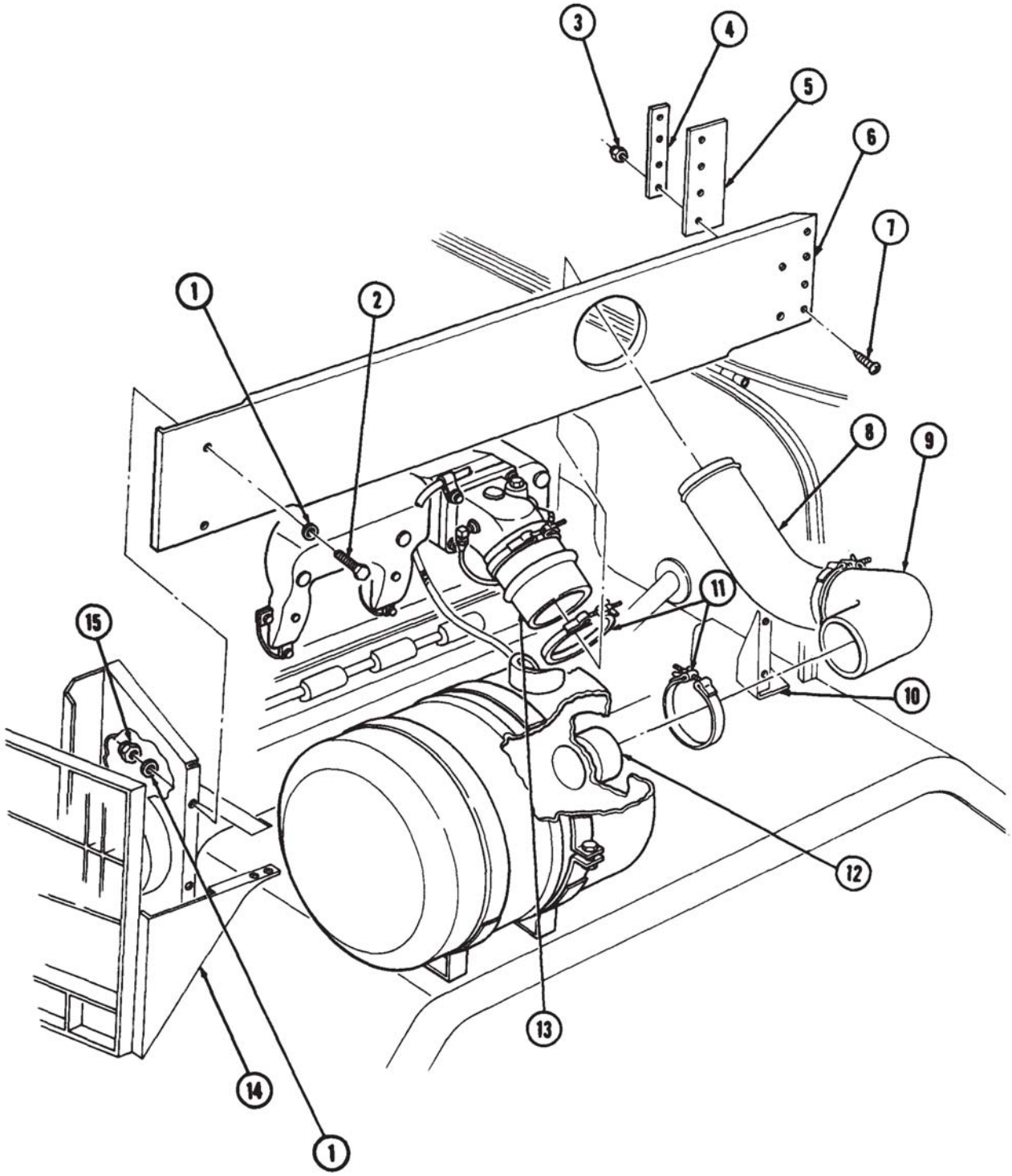

11-7. RIGHT SIDE PANEL MAINTENANCE

THIS TASK COVERS:

a. Removal
b. Disassembly
c. Assembly
d. Installation

INITIAL SETUP

APPLICABLE MODELS
All

MATERIALS/PARTS
Three bumpers
Seven lockwashers
Fifteen locknuts

REFERENCES (TM)
TM 9-2320-260-10
TM 9-2320-260-20P

EQUIPMENT CONDITION
. Parking brake set (TM 9-2320-260-10).
. Hood raised and secured (TM 9-2320-260-10).

a. Removal

NOTE

Perform step 1 on vehicles equipped with personnel hot water heater.

1. Remove clamp (7) and hose (6) from elbow (8).
2. Turn two thumb cranks (14) and (25) to unlock side panel (5) from fender (24).
3. Raise spring clip (19) and remove side panel (5) from fender (24) by sliding side panel (5) forward until free of vehicle.

NOTE

Perform steps 1 and 2 on vehicles equipped with personnel hot water heater.

1. Remove three nuts (13), lockwashers (12), screws (23), and hood (22) from side panel (5). Discard lockwashers (12).
2. Remove four nuts (10), lockwashers (9), screws (21), screen (11), and elbow (8) from side panel (5). Discard lockwashers (9).
3. Remove four locknuts (4), retainer (3), seal (2), and four screws (1) from side panel (5). Discard locknuts (4).
4. Remove four locknuts (16), screws (20), and two locks (15) from side panel (5). Discard locknuts (16).
5. Remove locknut (40), three screws (39) and (34), washers (38) and (35), bracket (36), and hinge (37) from rear of fender (24). Discard locknut (40).
6. Remove two locknuts (43), washers (42), hinge (41), and two screws (44) from front offender (24). Discard locknuts (43).
7. Remove two locknuts (28), washers (27), hinge pin (26), and two screws (29) from rear of side panel (5). Discard locknuts (28).
8. Remove two locknuts (31), washers (30), spring clip (19), hinge pin (32), and two screws (33) from front of side panel (5). Discard locknuts (31).
9. Remove three bumpers (18) from headlight bracket (17). Discard bumpers (18).

11-7. RIGHT SIDE PANEL MAINTENANCE (Contd)

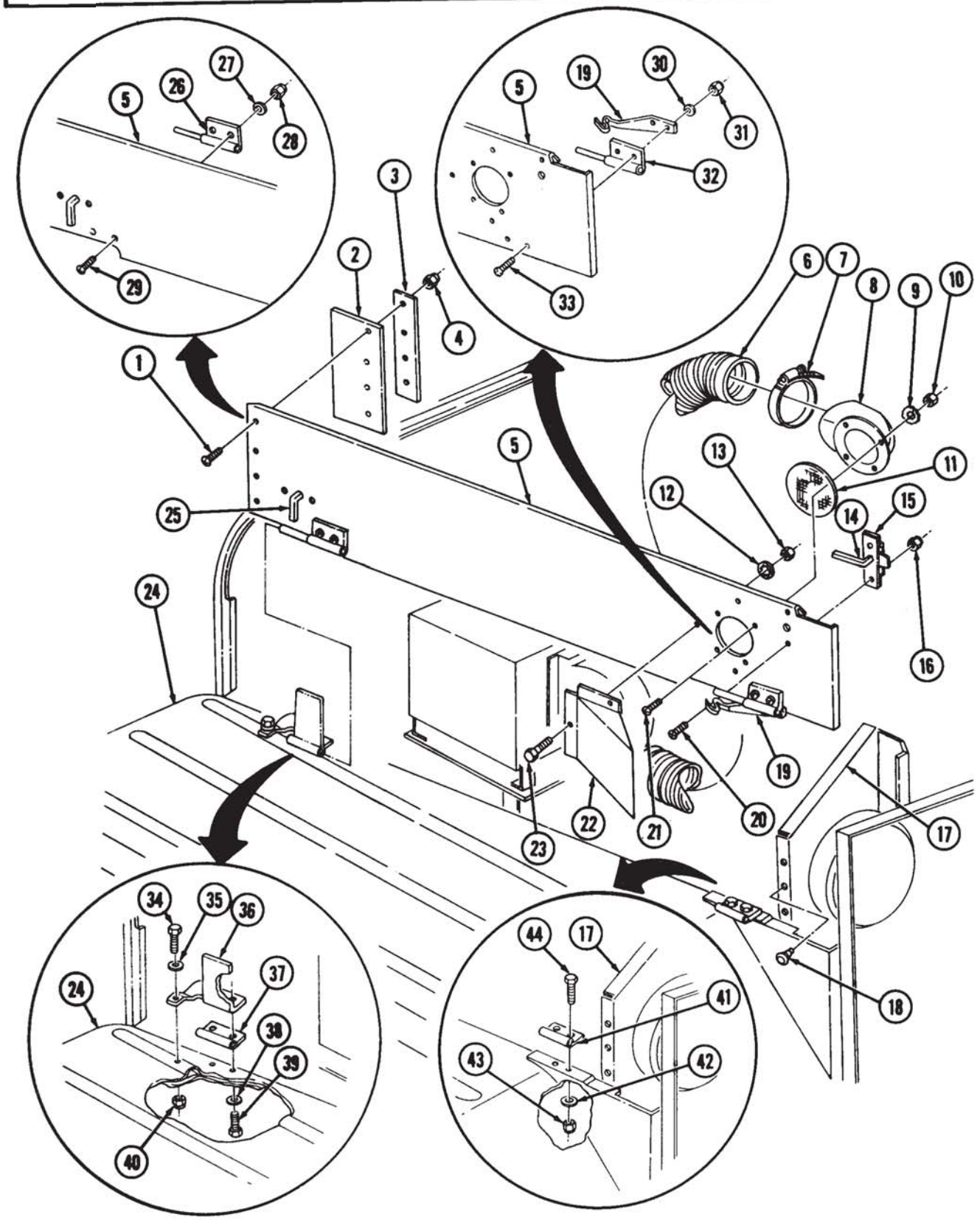

11-7. RIGHT SIDE PANEL MAINTENANCE (Contd)

c. Assembly

1. Install three new bumpers (18) on headlight bracket (17).
2. Install hinge pin (32) and spring clip (19) on front of side panel (5) with two screws (33), washers (30), and new locknuts (31).
3. Install hinge pin (26) on rear of side panel (5) with two screws (29), washers (27), and new locknuts (28).
4. Install hinge (41) on front offender (24) with two screws (44), washers (42), and new locknuts (43).
5. Install hinge (37) and bracket (36) on rear offender (24) with three screws (39) and (34), washers (38) and (35), and new locknut (40).
6. Install two locks (15) on side panel (5) with four screws (20) and new locknuts (16).
7. Install seal (2) and retainer (3) on side panel (5) with four screws (1) and new locknuts (4).

NOTE

Perform steps 8 and 9 on vehicles equipped with personnel hot water heater.

8. Install screen (11) and elbow (8) on side panel (5) with four screws (21), new lockwashers (9), and nuts (10).
9. Install hood (22) on side panel (5) with three screws (23), new lockwashers (12), and nuts (13).

1. Aline two hinge pins (32) and (26) with two hinges (41) and (37), raise spring clip (19) and install side panel (5) on fender (24) by sliding side panel (5) to the rear until in place.
2. Lock side panel (5) to fender (24) by turning two thumb cranks (14) and (25).

NOTE

Perform step 3 on vehicles equipped with personnel hot water heater.

3. Install hose (6) on elbow (8) with clamp (7).

11-7. RIGHT SIDE PANEL MAINTENANCE (Contd)

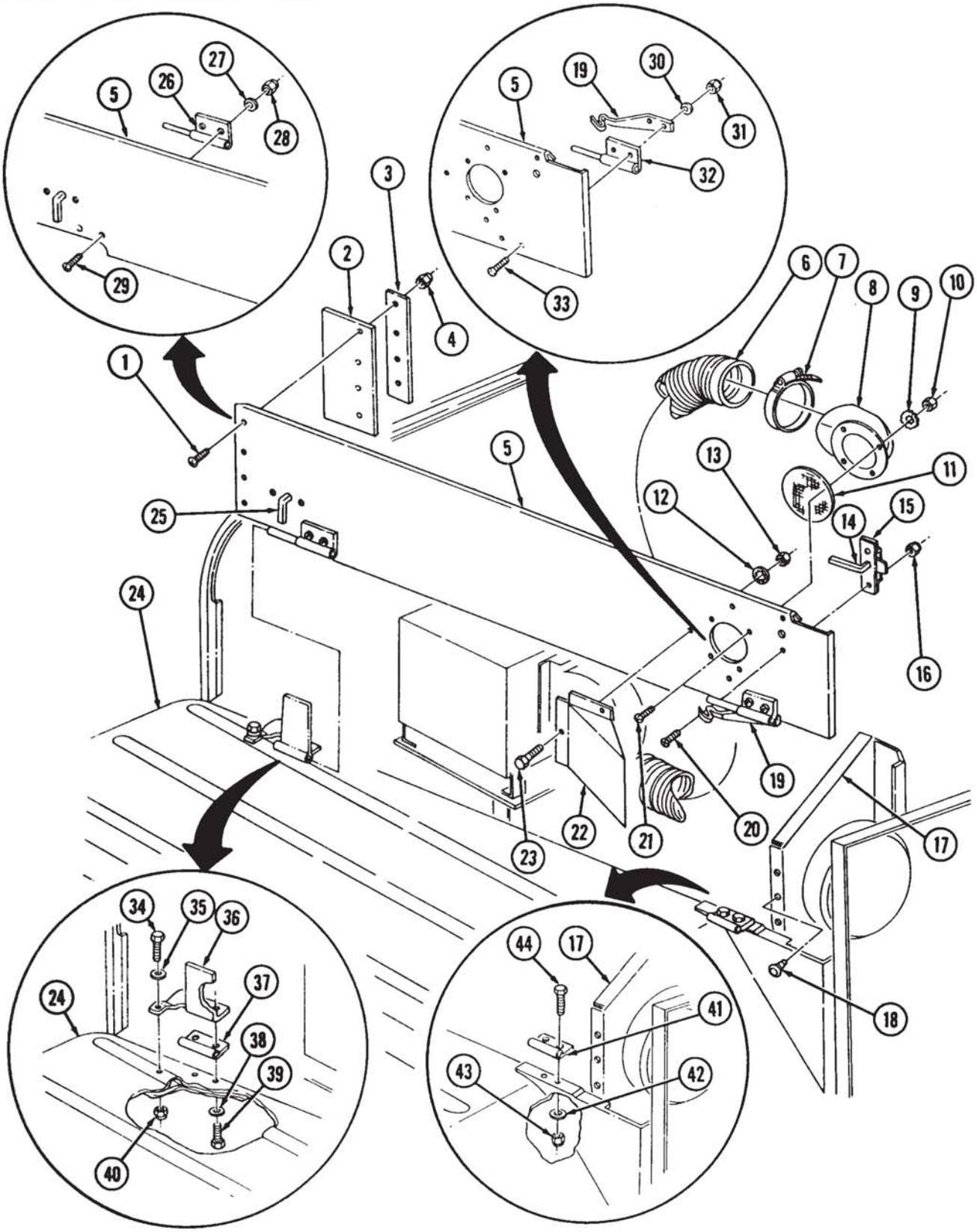

11-8. RIGHT HEADLIGHT BRACKET REPLACEMENT

THIS TASK COVERS:

a. Removal **b. Installation**

INITIAL SETUP

APPLICABLE MODELS
All

MATERIALS/PARTS
Ten locknuts
Two lockwashers

REFERENCES (TM)
TM 9-2320-260-10
TM 9-2320-260-20P

EQUIPMENT CONDITION
. Parking brake set (TM 9-2320-260-10).
. Headlight removed (para. 4-38).

a. Removal

1. Remove two locknuts (15), screws (4), and seal mounting bracket (3) from right headlight bracket (1). Discard locknuts (15).
2. Remove two locknuts (23), washers (22), screws (25), and side panel (24) from bracket (1). Discard locknuts (23).
3. Remove locknut (20), washer (21), and screw (2) from bracket (1) and brace (16). Discard locknut (20).
4. Remove locknut (13), harness clamp (12), lockwasher (11), screw (19), lockwasher (11), terminal (17), harness clamp (18), and brace (16) from fender (14). Discard locknut (13) and lockwashers (11).
5. Remove two locknuts (10), washers (8), screws (7), and washers (8) from bracket (1) and fender (14). Discard locknuts (10).
6. Remove two locknuts (9), screws (5), washers (6), and bracket (1) from fender (14). Discard locknuts (9).

1. Install right headlight bracket (1) on fender (14) with two washers (6), screws (5), and new locknuts (9).
2. Secure bracket (1) to fender (14) with two washers (8), screws (7), washers (8), and new locknuts (10).
3. Install brace (16) on fender (14) with harness clamp (18), terminal (17), new lockwasher (11), screw (19), new lockwasher (11), harness clamp (12), and new locknut (13).
4. Secure brace (16) to bracket (1) with screw (2), washer (21), and new locknut (20).
5. Install side panel (24) on bracket (1) with two screws (25), washers (22), and new locknuts 23).
6. Install seal mounting bracket (3) on bracket (1) with two screws (4) and new locknuts (15).

11-8. RIGHT HEADLIGHT BRACKET REPLACEMENT (Contd)

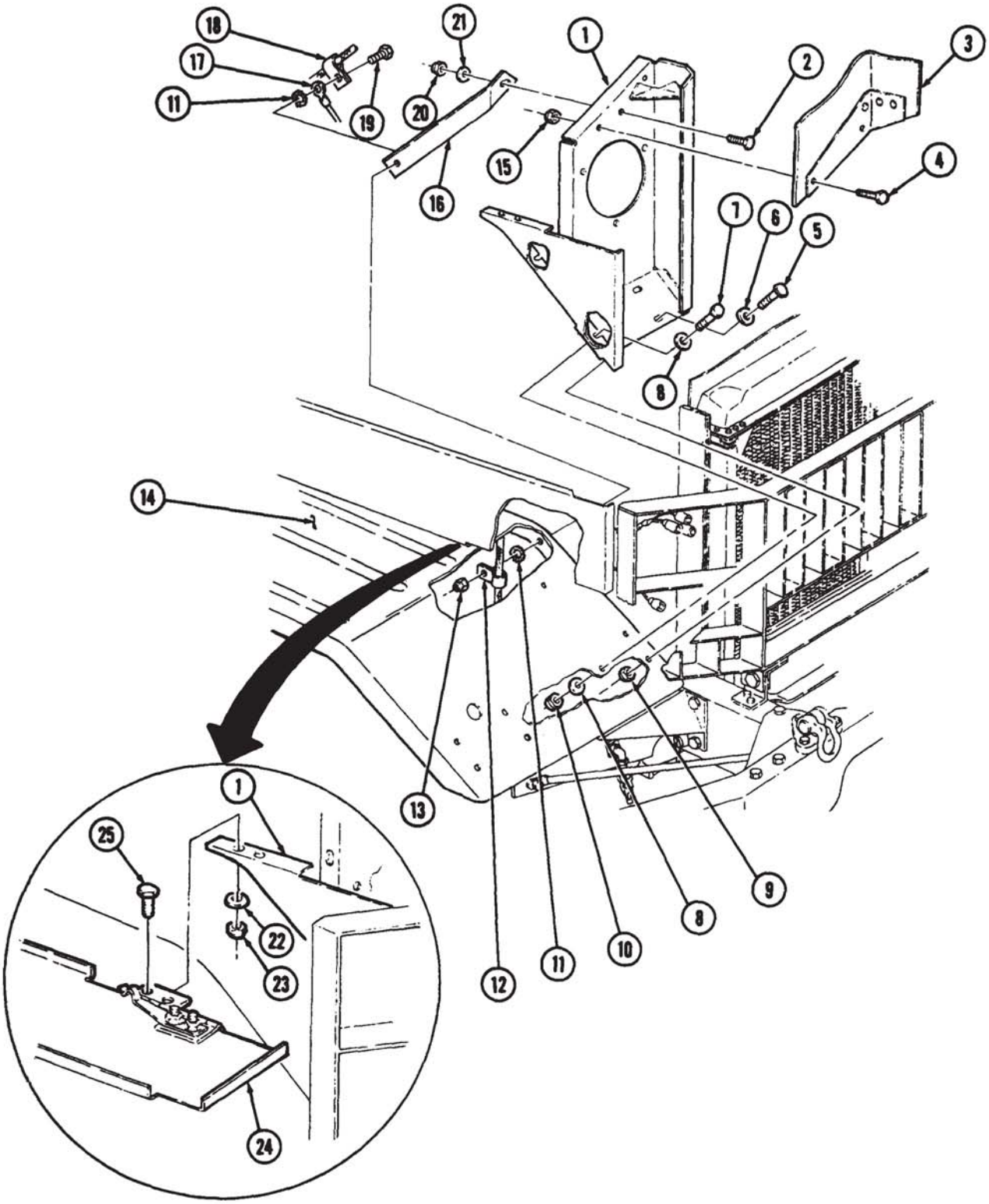

FOLLOW-ON TASK: Install headlight (para. 4-38).

11-9. LEFT HEADLIGHT BRACKET REPLACEMENT

THIS TASK COVERS:

a. Removal **b. Installation**

INITIAL SETUP

APPLICABLE MODELS
All

MATERIALS/PARTS
Ten locknuts

REFERENCES (TM)
TM 9-2320-260-10
TM 9-2320-260-20P

EQUIPMENT CONDITION
- Parking brake set (TM 9-2320-260-10).
- Headlight removed (para. 4-38).
- Blackout light assembly removed (para. 4-41).

a. Removal

1. Remove two locknuts (7), screws (19), and seal mounting bracket (20) from left headlight bracket (l). Discard locknuts (7).
2. Remove two locknuts (22), washers (9), screws (10), and washers (9) from bracket (1) and side panel (8). Discard locknuts (22).
3. Remove locknut (4), washer (3), and screw (21) from bracket (1) and brace (2). Discard locknut (4).
4. Remove locknut (11), screw (5), washer (6), and brace (2) from fender (12). Discard locknut (11).
5. Remove two locknuts (13), washers (14), screws (16), and washers (14) from bracket (1) and fender (12). Discard locknuts (13).
6. Remove two locknuts (15), screws (18), washers (17), and bracket (1) from fender (12). Discard locknuts (15).

b. Installation

1. Install left headlight bracket (1) on fender (12) with two washers (17), screws (18), and new locknuts (15).
2. Secure bracket (1) to fender (12) with two washers (14), screws (16), washers (14), and new locknuts (13).
3. Install brace (2) on fender (12) with washer (6), screw (5), and new locknut (11).
4. Secure brace (2) to bracket (1) with screw (21), washer (3), and new locknut (4).
5. Secure side panel (8) to bracket (1) with two washers (9), screws (10), washers (9), and new locknuts (22).
6. Install seal mounting bracket (20) on bracket (1) with two screws (19) and new locknuts (7).

11-9. LEFT HEADLIGHT BRACKET REPLACEMENT (Contd)

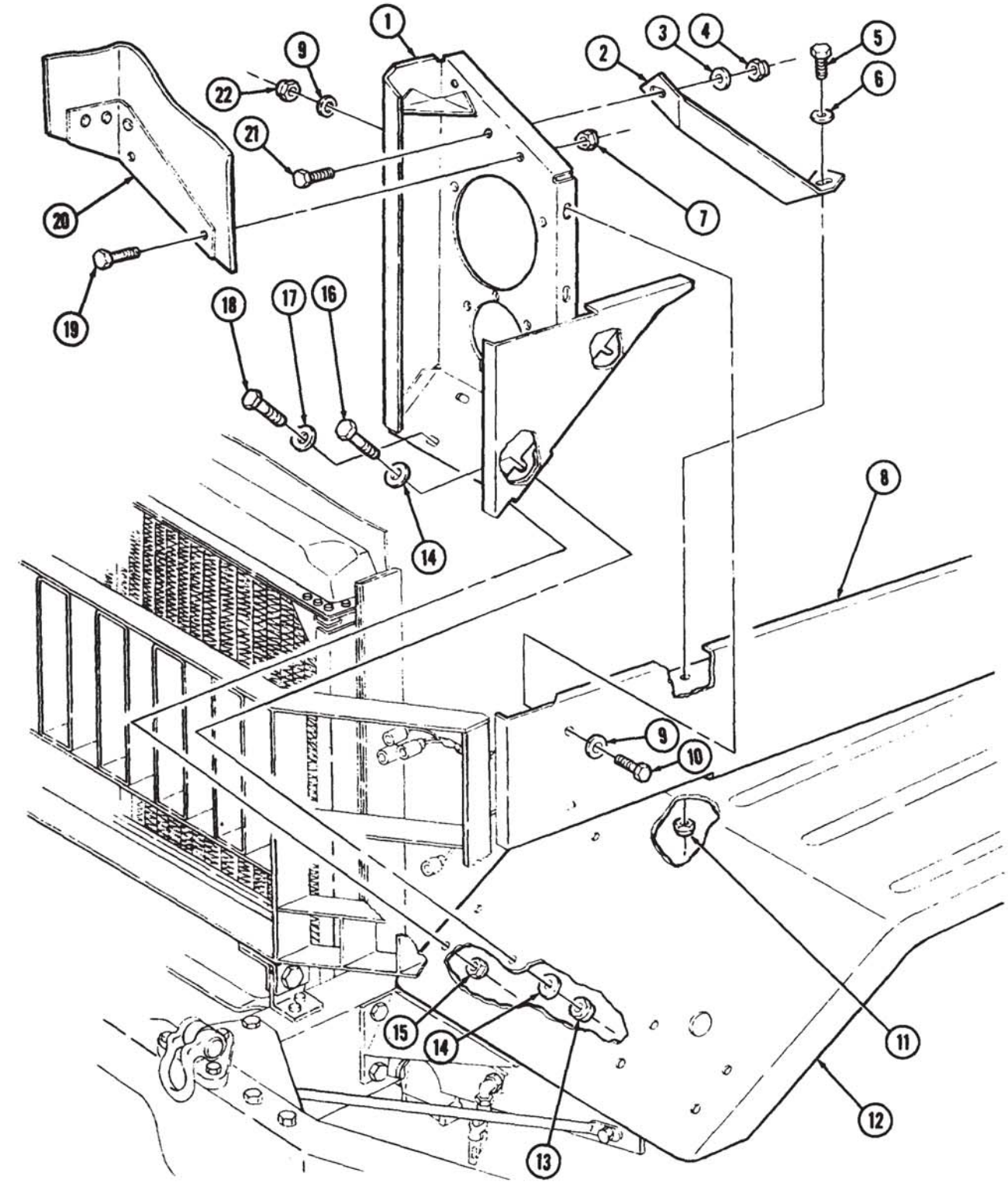

FOLLOW-ON TASKS: • Install headlight (para. 4-38).
• Install blackout light assembly (4-41).

11-10. RIGHT FENDER REPLACEMENT

THIS TASK COVERS:

a. Removal **b. Installation**

INITIAL SETUP

APPLICABLE MODELS
All

MATERIALS/PARTS
Twenty-two locknuts
Two lockwashers

REFERENCES (TM)
TM 9-2320-260-20P

EQUIPMENT CONDITION
- Exhaust pipe removed (para. 3-40).
- Front composite light assembly removed (para. 4-40).
- Right side panel removed (para. 11-7).
- Power steering assist cylinder front and side shields removed (para. 11-26).

a. Removal

1. Remove locknut (7), harness clamp (6), and screw (5) from fender (1). Discard locknut (7).
2. Remove locknut (8), harness clamp (9), lockwasher (10), screw (13), lockwasher (10), terminal (12), harness clamp (14), and harness (15) from fender (1) and brace (11). Discard locknut (8) and lockwashers (10).
3. Remove six locknuts (4), washers (3), screws (2), and washers (3) from fender support (16) and fender (1). Discard locknuts (4).
4. Remove two locknuts (17), washers (18), screws (21), and washers (20) from headlight bracket (24) and fender (1). Discard locknuts (17).
5. Remove two locknuts (19), screws (23), washers (22), and headlight bracket (24) from fender (1). Discard locknuts (19).
6. Turn four fasteners (32) counterclockwise and remove access panel (31) from fender (1).
7. Remove three locknuts (36), screws (40), washers (39), plate (37), and shield (38) from fender (1). Discard locknuts (36).
8. Remove four locknuts (33), washers (34), screws (41), and washers (34) from fender (1) and rear brace (35). Discard locknuts (33).
9. Remove three locknuts (25), washers (26), screws (30), washers (26), fender (1), and fender anti-squeak (28) from front brace (27). Discard locknuts (25).
10. Remove grommet (29) from fender (1).

b. Installation

1. Install grommet (29) on fender (1).
2. Install fender anti-squeak (28) and fender (1) on front brace (27) with three washers (26), screws (30), washers (26), and new locknuts (25).
3. Secure fender (1) to rear brace (35) with four washers (34), screws (41), washers (34), and new locknuts (33).
4. Install shield (38) on fender (1) with three washers (39), screws (40), plate (37), and three new locknuts (36).
5. Install access panel (31) on fender (1) with four fasteners (32).
6. Install headlight bracket (24) on fender (1) with two washers (22), screws (23), and new locknuts (19).
7. Secure headlight bracket (24) to fender (1) with two washers (20), screws (21), washers (18), and new locknuts (17).
8. Secure fender (1) to fender support (16) with six washers (3), screws (2), washers (3), and new locknuts (4).
9. Install harness (15) on fender (1) and brace (11) with harness clamp (14), terminal (12), new lockwasher (10), screw (13), new lockwasher (10), harness clamp (9), and new locknut (8).
10. Install harness clamp (6) on fender (1) with screw (5) and new locknut (7).

11-10. RIGHT FENDER REPLACEMENT (Contd)

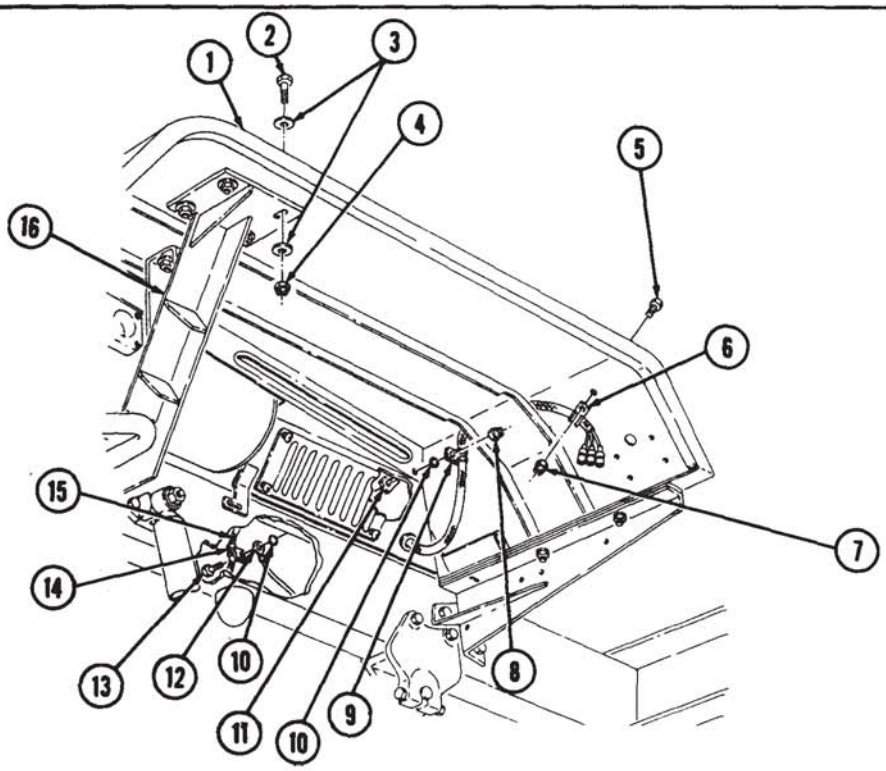

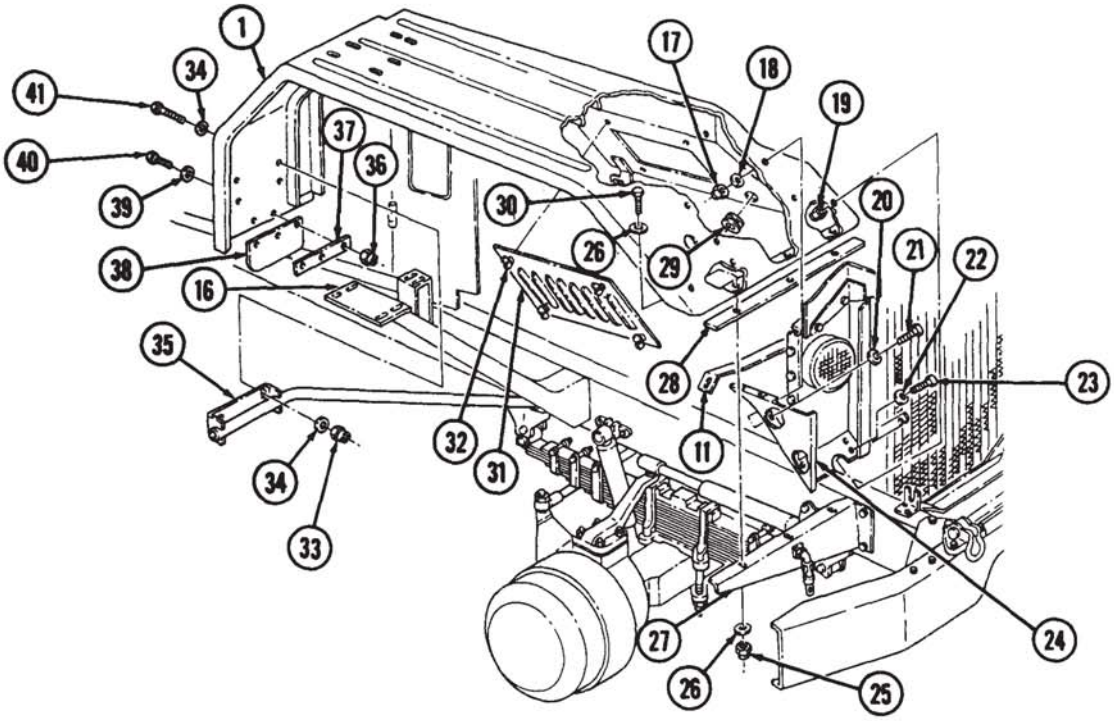

FOLLOW-ON TASKS:
- Install exhaust pipe (para. 3-40).
- Install front composite light assembly (para. 4-40).
- Install right side panel (para. 11-7).
- Install power steering assist cylinder front and side shields (para. 11-26).

11-11. LEFT FENDER REPLACEMENT

THIS TASK COVERS:

a. Removal **b. Installation**

INITIAL SETUP

APPLICABLE MODELS
All

MATERIALS/PARTS
Thirty-three locknuts

REFERENCES (TM)
TM 9-2320-260-20P

EQUIPMENT CONDITION
- Air cleaner removed (para. 3-15).
- Blackout light assembly removed (para. 4-41).
- Left side panel removed (para. 11-6).
- Steering gear shield removed (para. 11-25).

a. Removal

1. Remove two locknuts (14), harness cleanups (16) and (12), and two screws (17) from fender (1). Discard locknuts (14).
2. Remove locknut (6), harness clamp (7), terminal (8), washer (10), screw (13), washer (10), and harness (15) from fender (1). Discard locknut (6).
3. Remove locknut (5), screw (11), and washer (9) from fender (1) and frame (4). Discard locknut (5).
4. Turn five fasteners (2) counterclockwise and remove access panel (3) from fender (1).

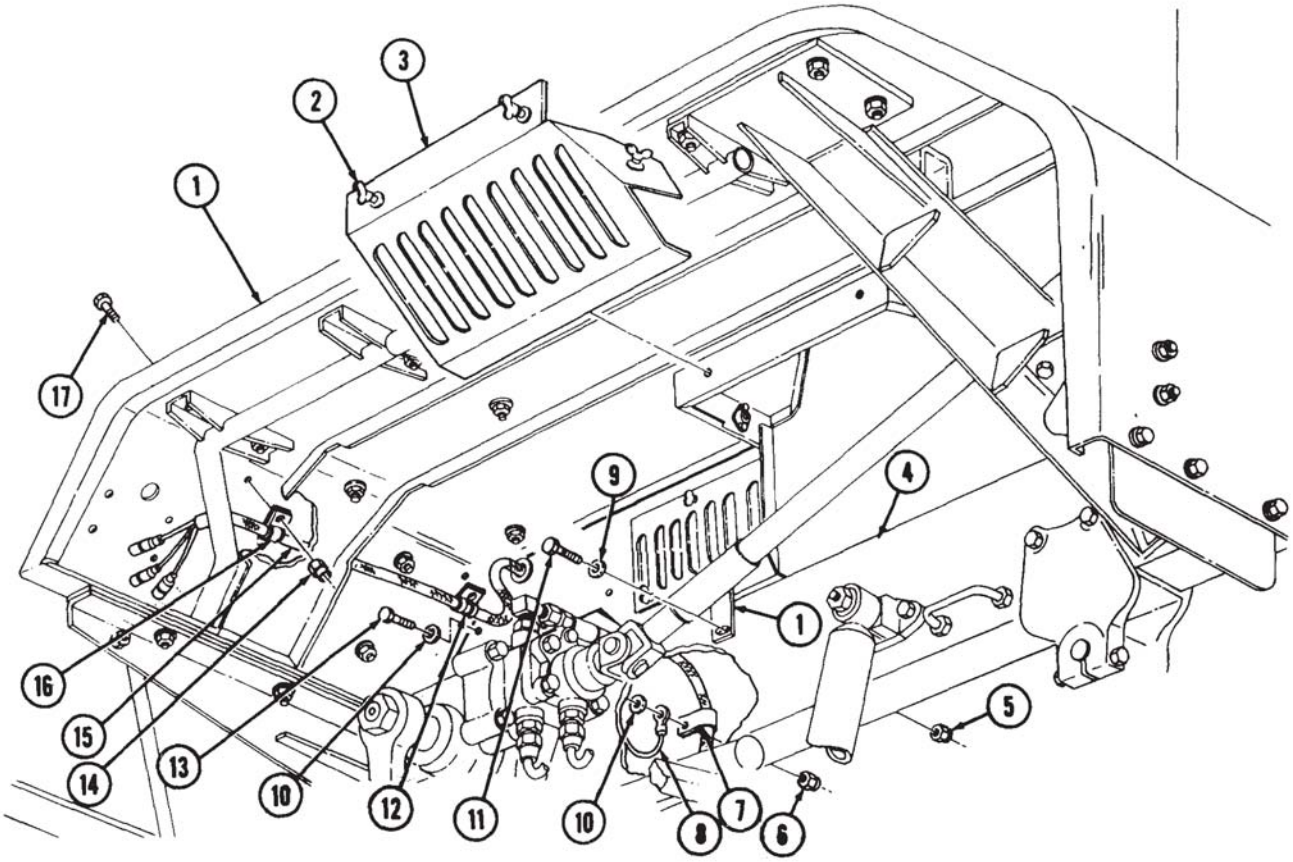

11-11. LEFT FENDER REPLACEMENT (Cord)

5. Remove three locknuts (22), washers (23), screws (24), and washera (23) from fender (1), fender support (25), and front brace (29). Discard locknuts (22).
6. Remove two locknuts (19), washers (20), screws (21), and fender brace (18) from fender (1). Discard locknuts (19).
7. Remove two locknuts (28), washera (27), screws (26), and washera (27) from fender (1) and front brace (29). Discard locknuts (28).

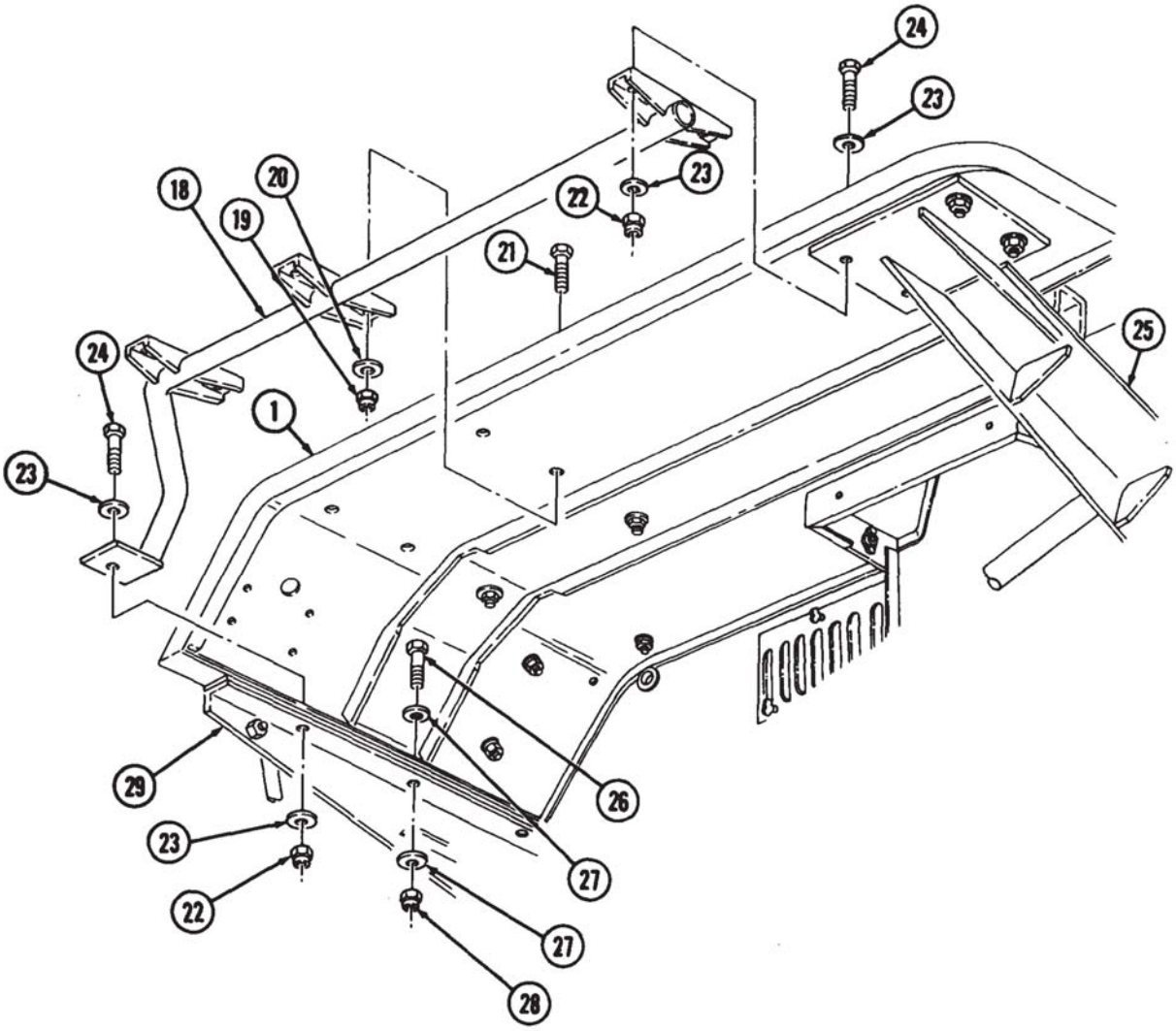

11-11. LEFT FENDER REPLACEMENT (Contd)

8. Remove two locknuts (21), washers (19), screws (18), and washers (19) from headlight bracket (14) and fender (1). Discard locknuts (21).
9. Remove two locknuts (20), screws (16), and washers (17) from headlight bracket (14) and fender (1). Discard locknuts (20).
10. Remove locknut (22), screw (11), washer (10), headlight bracket (14), and brace (13) from fender (1). Discard locknut (22).
11. Remove four locknuts (8), washers (4), screws (5), and washers (4) from fender (1) and rear brace (7). Discard locknuts (8).
12. Remove four locknuts (9), washers (3), screws (2), washers (3), and fender (1) from fender support (6). Discard locknuts (9).
13. Remove anti-squeak (12) from front brace (15).

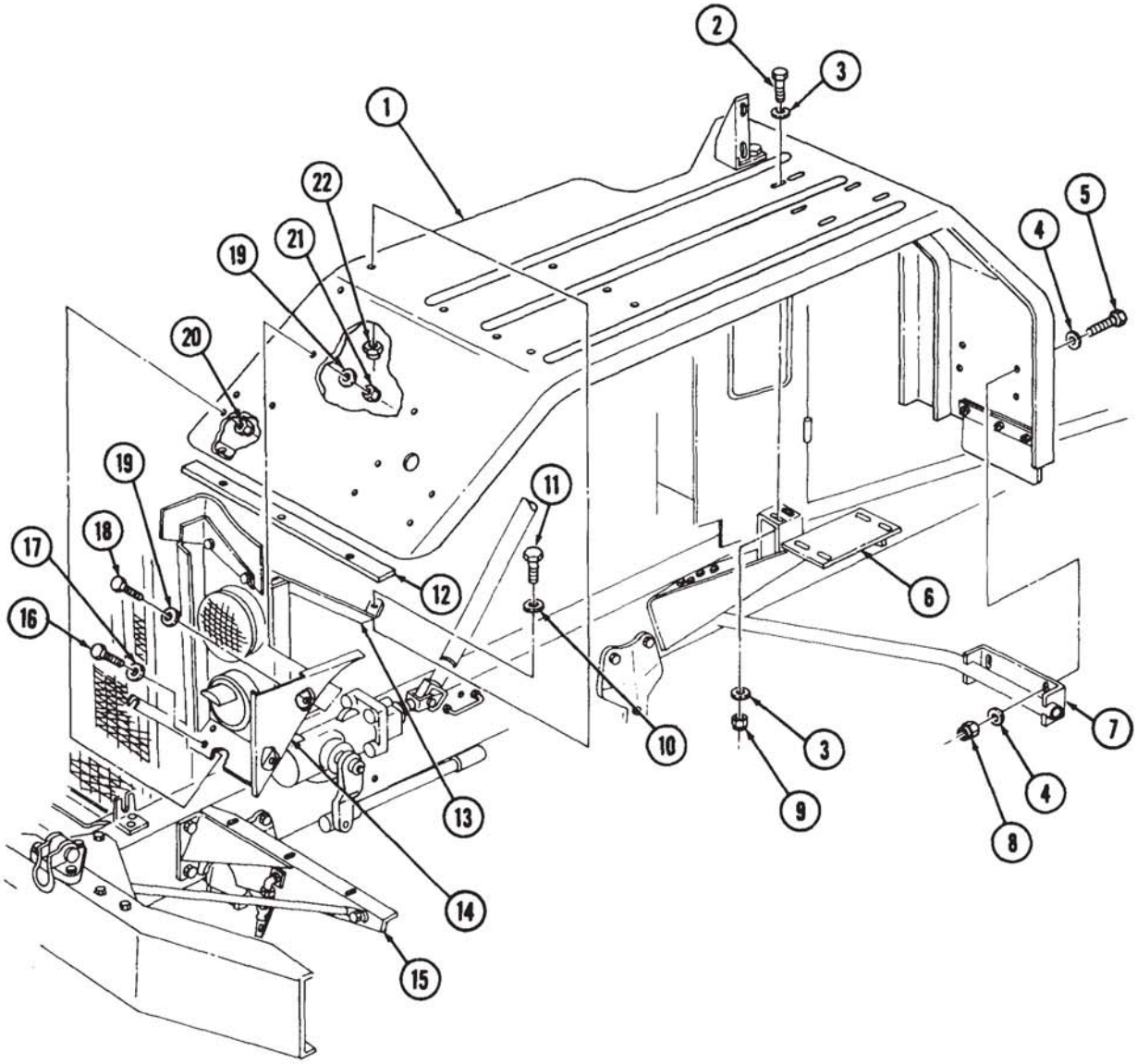

11-11. LEFT FENDER REPLACEMENT (Contd)

14. Turn three fasteners (37) counterclockwise and remove access panel (38) from fender (1).
15. Remove three locknuts (23), washers (24), screws (35), washers (24), and plate (36) from fender (1). Discard locknuts (23).
16. Remove three locknuts (29), washers (26), screws (27), washers (26), reinforcement (28), and side panel bracket (25) from fender (1). Discard locknuts (29).
17. Remove grommet (39) from fender (1).
18. Remove three locknuts (34), screws (31), washers (30), plate (33), and shield (32) from fender (1). Discard locknuts (34).

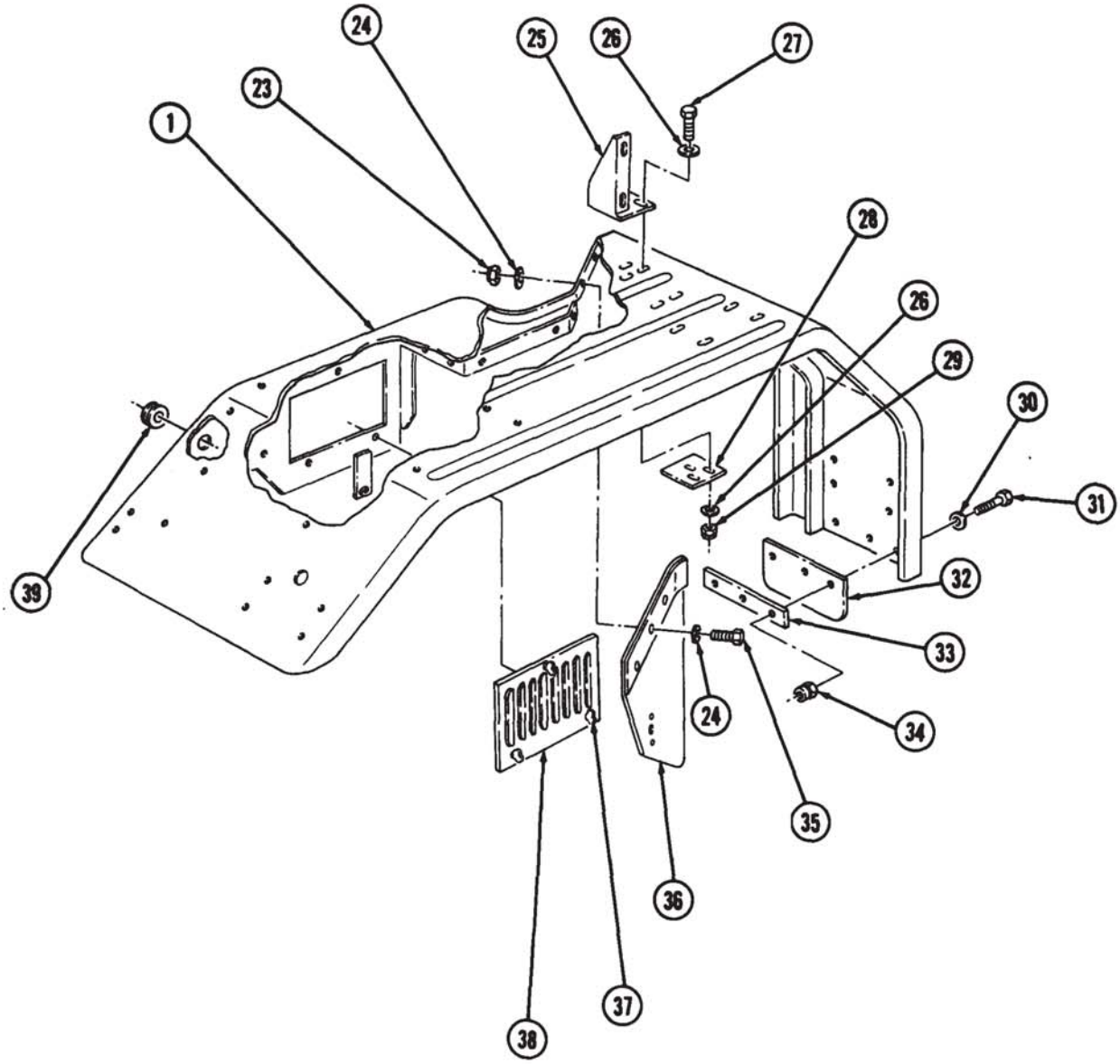

11-11. LEFT FENDER REPLACEMENT (Contd)

1. Install shield (11) and plate (12) on fender (1) with three washers (9), screws (10), and new locknuts (13).
2. Install grommet (18) on fender (1).
3. Install side panel bracket (4) and reinforcement (7) on fender (1) with three washers (5), screws (6), washers (5), and new locknuts (8).
4. Install plate (15) on fender (1) with three washers (3), screws (14), washers (3), and new locknuts (2).
5. Install access panel (17) on fender (1) with three fasteners (16).
6. Position anti-squeak (36) on front brace (31).
7. Install fender (1) on fender support (23) with four washers (20), screws (19), washers (20), and new locknuts (26).
8. Install fender (1) on rear brace (24) with four washers (21), screws (22), washers (21), and new locknuts (25).
9. Install headlight bracket (30) and brace (29) on fender (1) with washer (28), screw (27), and new locknut (39).
10. Install headlight bracket (30) on fender (1) with two washers (32), screws (33), and new locknuts (37).
11. Install two washers (35), screws (34), washers (35), and new locknuts (38) on headlight bracket (30) and fender (1).

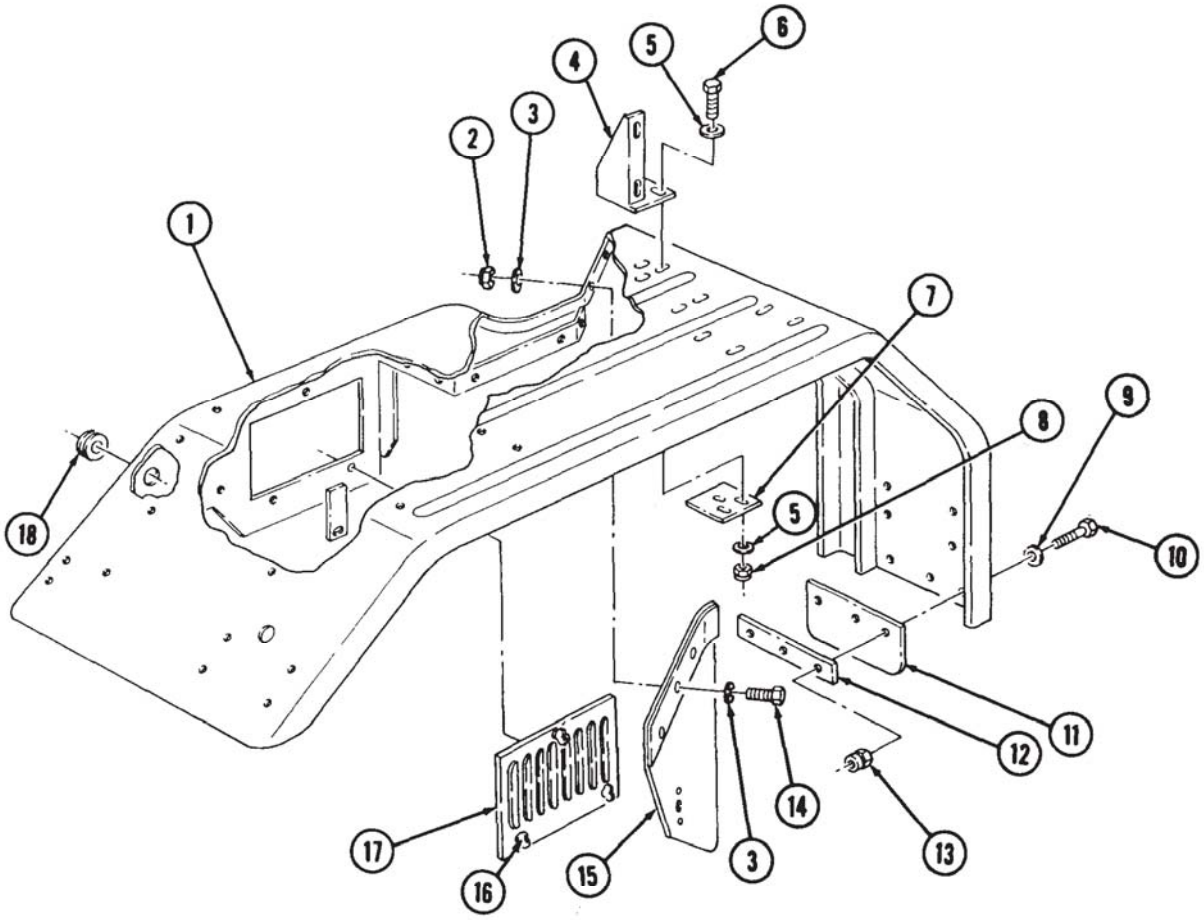

11-11. LEFT FENDER REPLACEMENT (Contd)

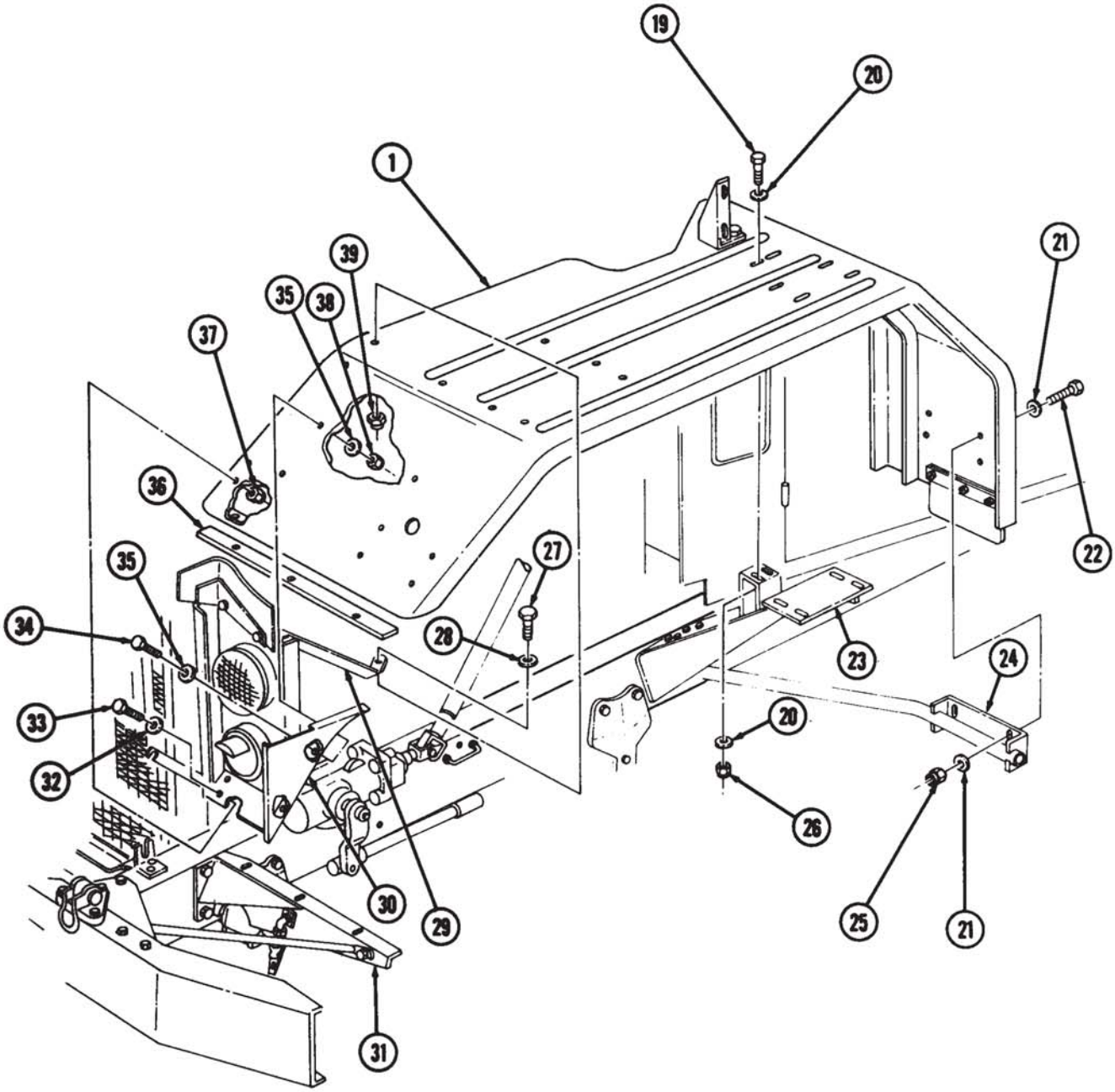

11-11. LEFT FENDER REPLACEMENT (Contd)

12. Install fender (10) on front brace (9) with two washers (7), screws (6), washers (7), and new locknuts (8).
13. Install fender brace (1) on fender (10) with two screws (13), washers (12), and new locknuts (11).
14. Install fender (10) on fender support (5) and front brace (9) with three washers (3), screws (4), washers (3), and new locknuts (2).
15. Install access panel (15) on fender (10) with five fasteners (14).
16. Install fender (10) on frame (16) with washer (22), screw (23), and new locknut (17).
17. Install harness (29) on fender (10) with washer (21), screw (25), washer (21), terminal (20), harness clamp (19), and new locknut (18).
18. Install harness (29) on fender (10) with two screws (28), harness clamps (24) and (27), and two new locknuts (26).

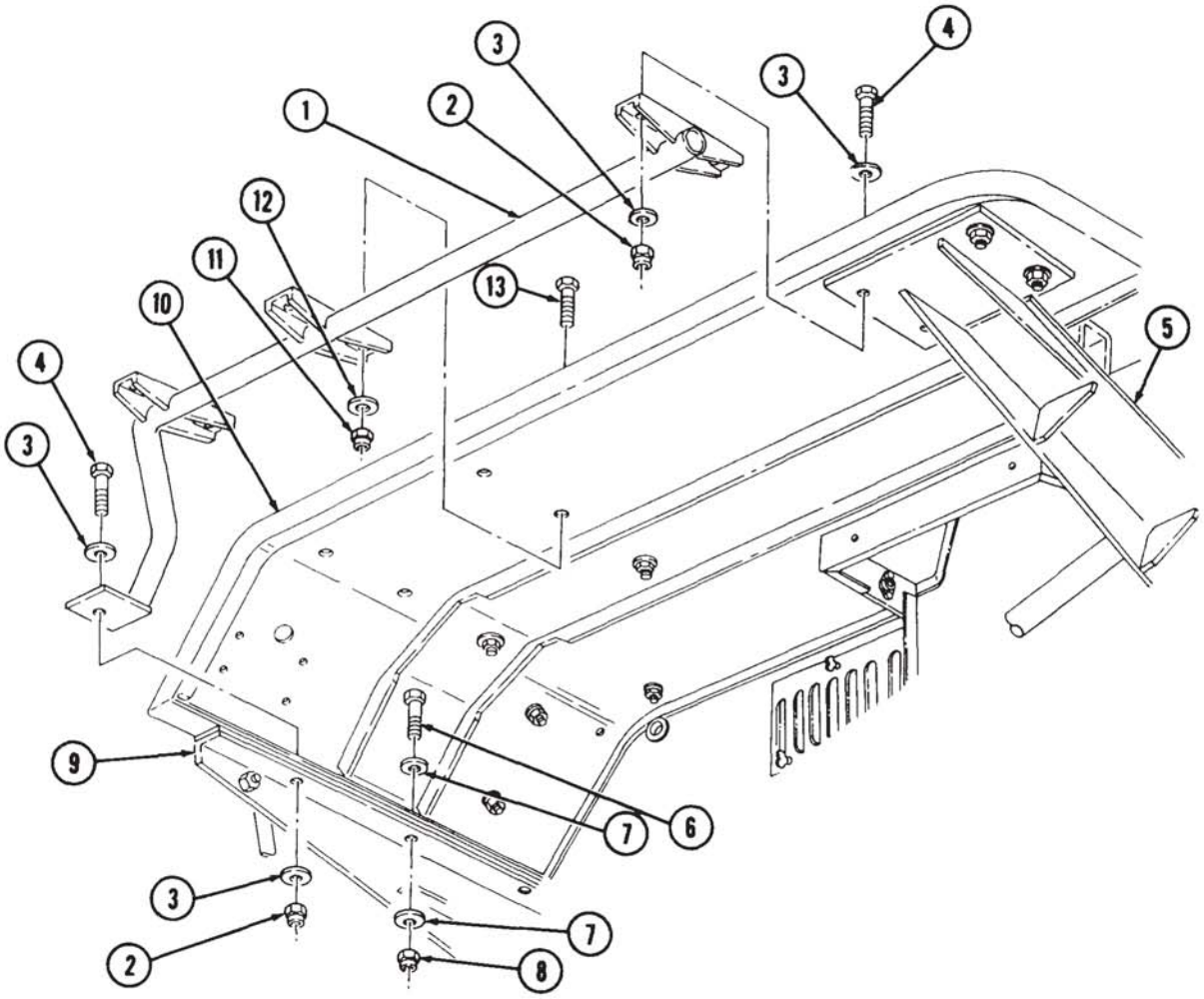

11-11. LEFT FENDER REPLACEMENT (Contd)

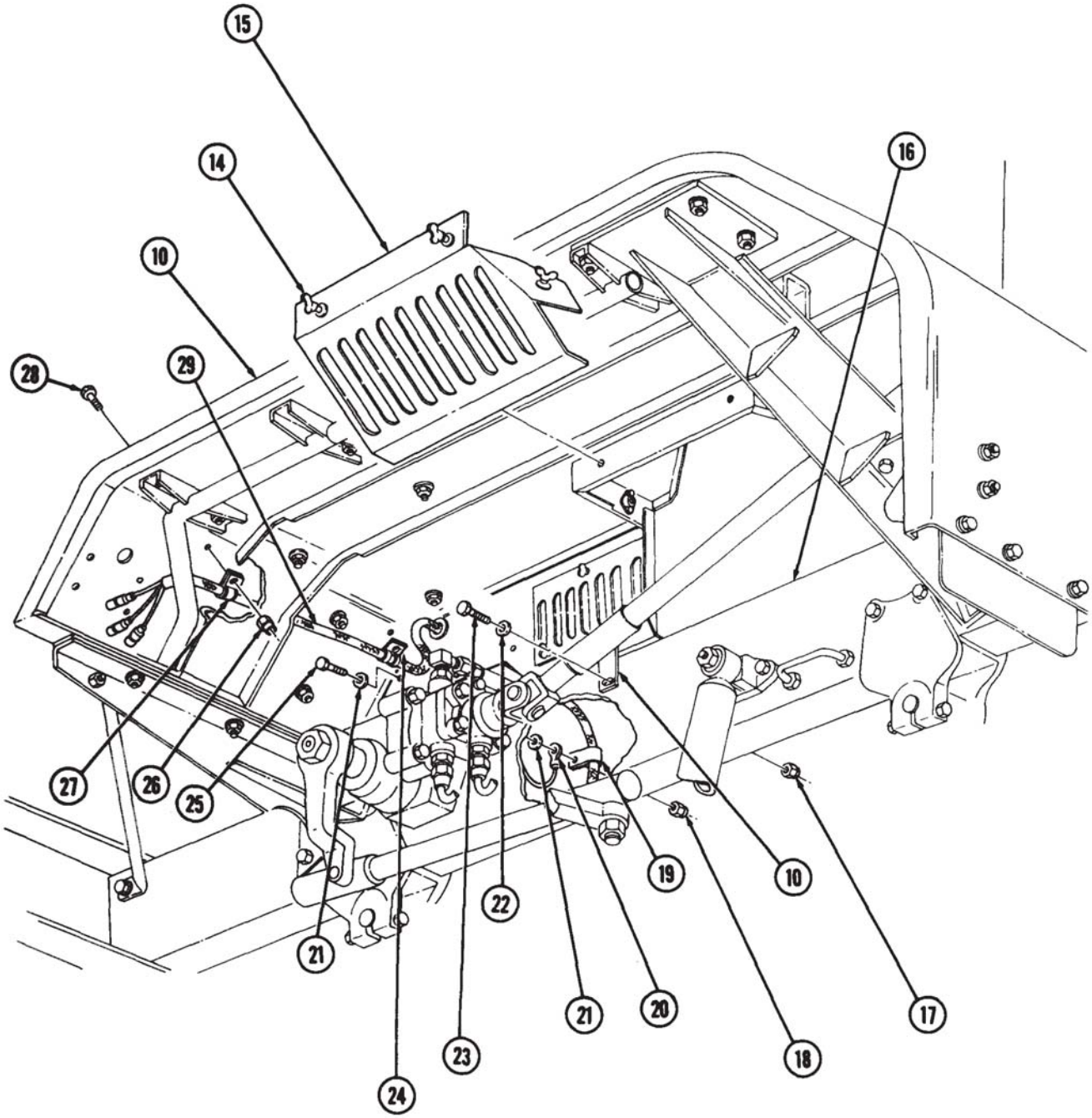

FOLLOW-ON TASKS:
- Install air cleaner (para. 3-15).
- Install blackout light assembly (para. 4-41).
- Install left side panel (para. 11-6).
- Install steering gear shield (para. 11-25).

11-12. CAB DOOR ACCESS COVER REPLACEMENT

THIS TASK COVERS:

a. Removal **b. Installation**

INITIAL SETUP

APPLICABLE MODELS
All

REFERENCES (TM)
TM 9-2320-260-10
TM 9-2320-260-20P

EQUIPMENT CONDITION
Parking brake set (TM 9-2320-260-10).

a. Removal

Remove six screws (3) and access cover (2) from cab door (1).

b. Installation

Install access cover (2) on cab door (1) with six screws (3).

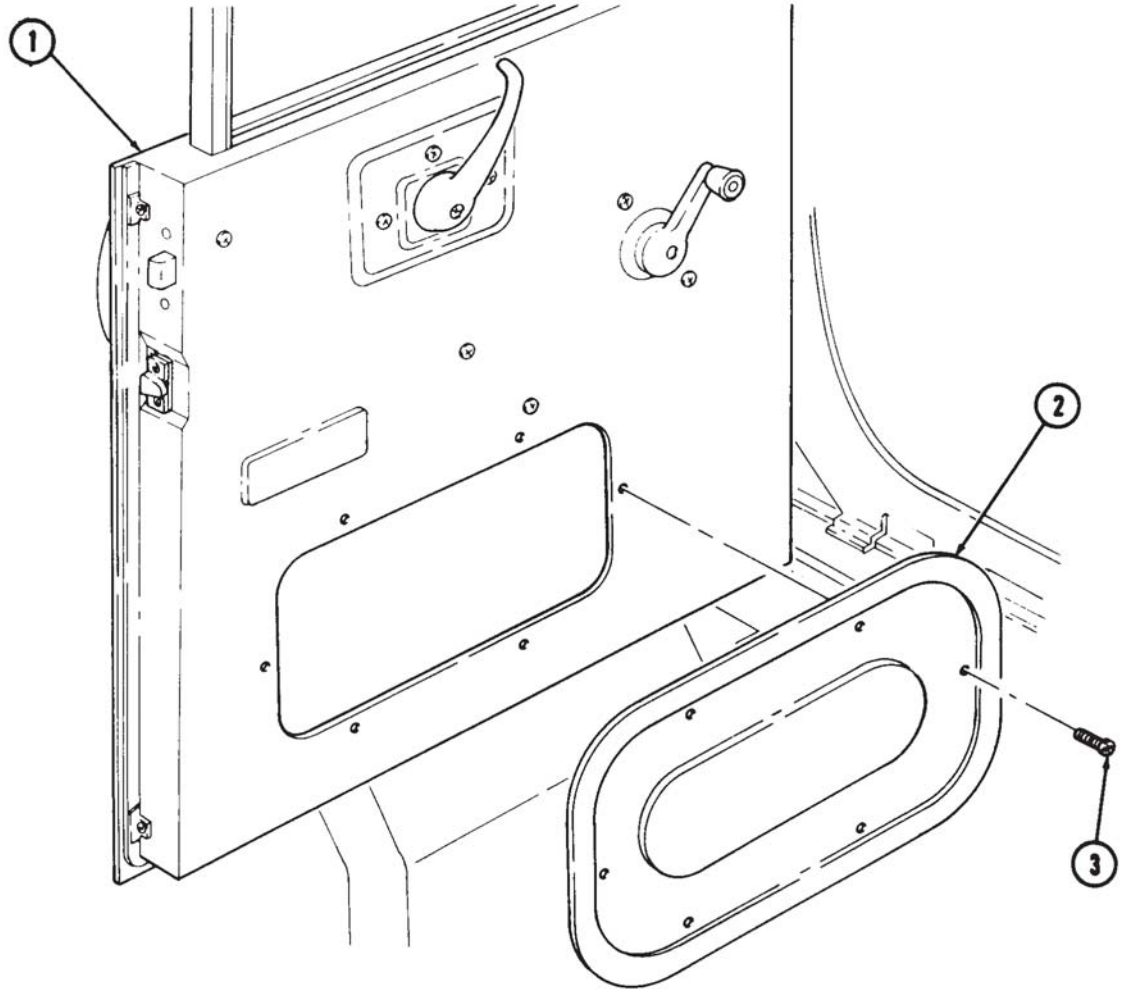

11-13. CAB DOOR DOVETAIL WEDGE REPLACEMENT

THIS TASK COVERS:

a. Removal **b. Installation**

INITIAL SETUP

APPLICABLE MODELS
All

MATERIALS/PARTS
Two screw-assembled lockwashers

REFERENCES (TM)
TM 9-2320-260-10
TM 9-2320-260-20P

EQUIPMENT CONDITION
Parking brake set (TM 9-2320-260-10).

a. Removal

Remove two screw-assembled lockwashers (1), dovetail wedge (2), shim (3), and plate (4) from cab door (5). Discard two screw-assembled lockwashers (1).

b. Installation

Install plate (4), shim (3), and dovetail wedge (2) on cab door (5) with two new screw-assembled lockwashers (1).

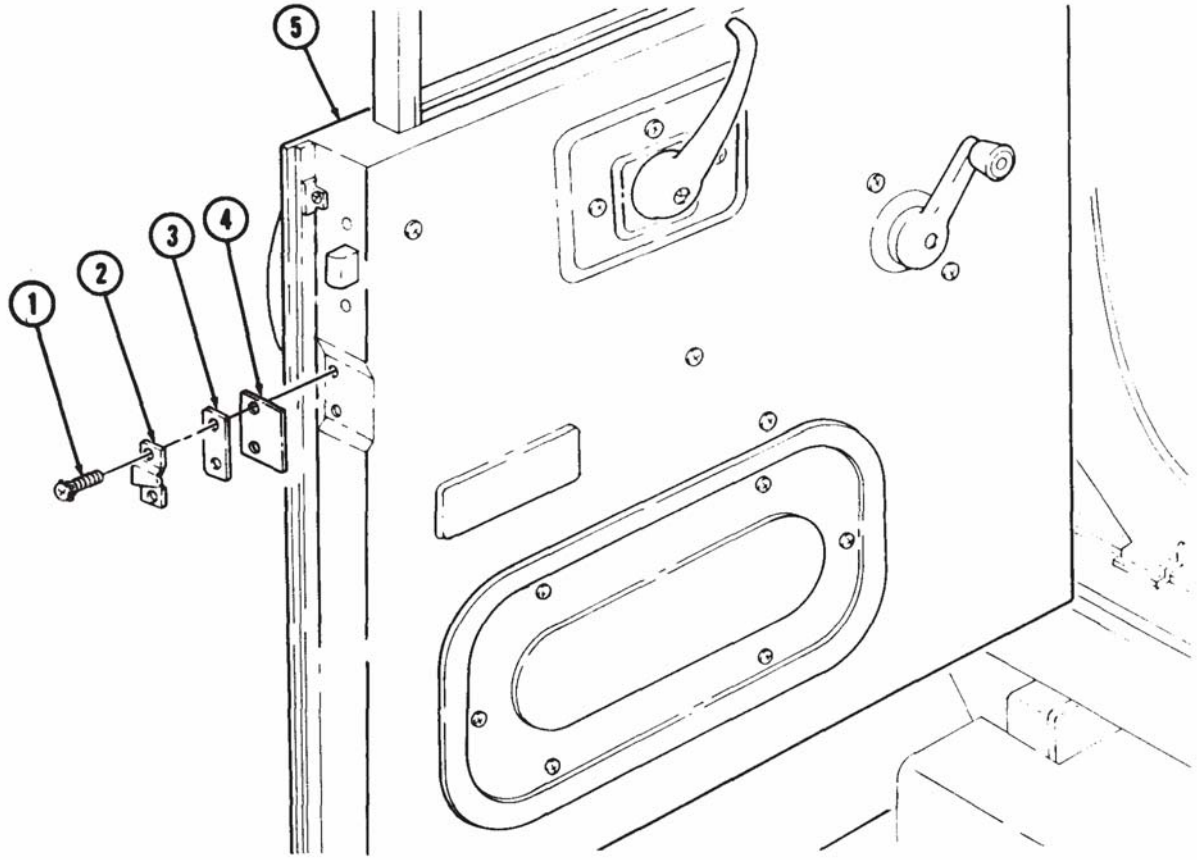

11-14. CAB DOOR CATCH REPLACEMENT

THIS TASK COVERS:

a. Removal **b. Installation**

INITIAL SETUP

APPLICABLE MODELS
All

MATERIALS/PARTS
Two screw-assembled lockwashers

REFERENCES (TM)
TM 9-2320-260-10
TM 9-2320-260-20P

EQUIPMENT CONDITION
Parking brake set (TM 9-2320-260-10).

a. Removal

Remove two screw-assembled lockwashers (3) and cab door catch (1) from cab body (2). Discard screw-assembled lockwashers (3).

b. Installation

Install cab door catch (1) on cab body (2) with two new screw-assembled lockwashers (3).

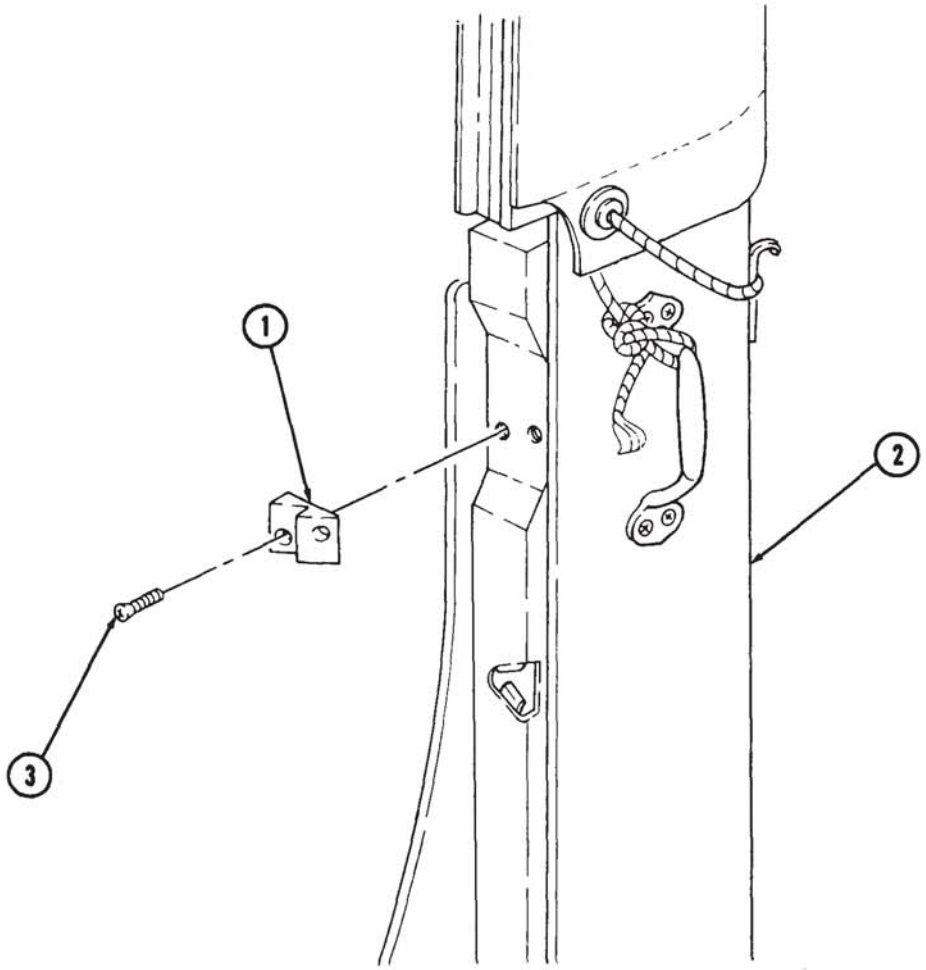

11-15. CAB HANDLES REPLACEMENT

THIS TASK COVERS:

a. Removal **b. Installation**

INITIAL SETUP

APPLICABLE MODELS
All

MATERIALS/PARTS
Four locknuts

REFERENCES (TM)
TM 9-2320-260-10
TM 9-2320-260-20P

EQUIPMENT CONDITION
Parking brake set (TM 9-2320-260-10).

a. Removal

1. Remove soft top rope (2) from cab handle (4).
2. Remove four screws (5), locknuts (6), plate (1), and cab handle (4) from cab (3). Discard locknuts (6).

b. Installation

1. Install cab handle (4) and plate (1) on cab (3) with four screws (5) and new locknuts (6).
2. Tie soft top rope (2) on cab handle (4).

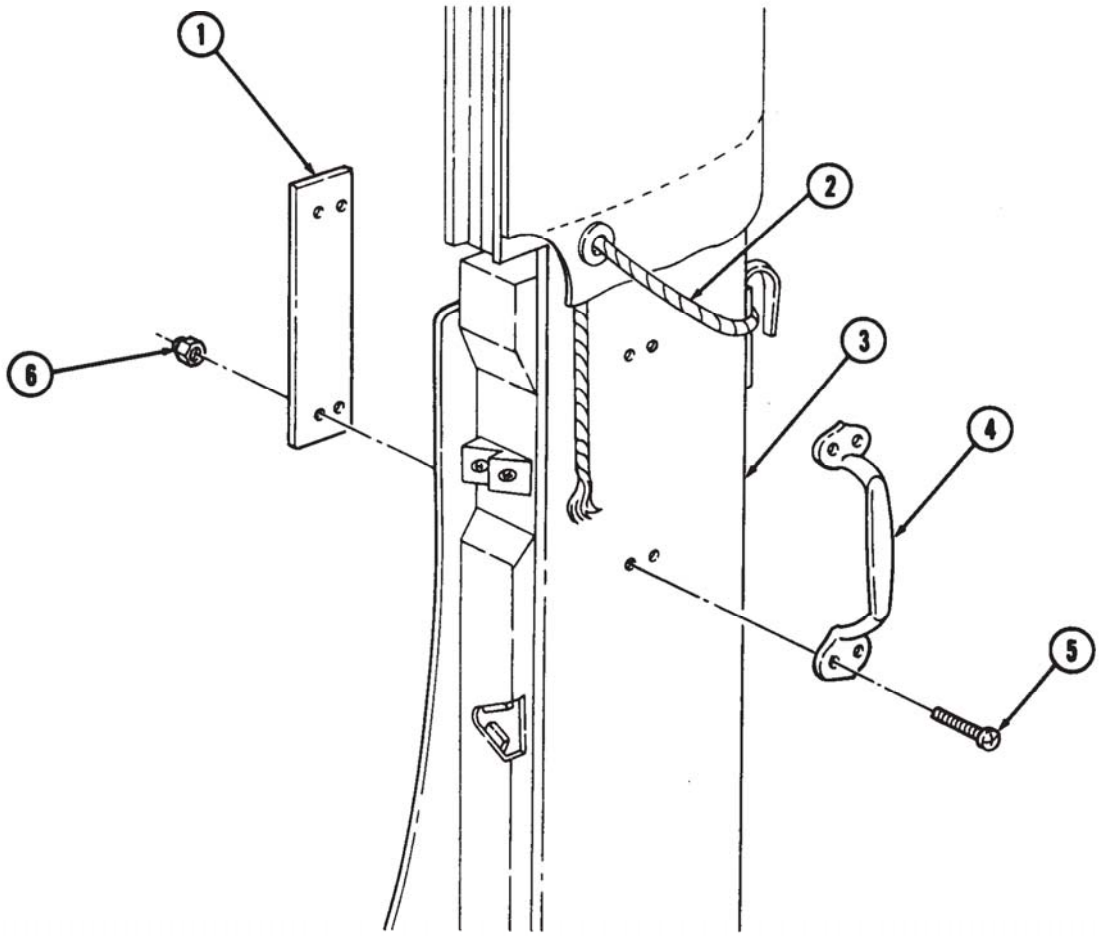

11-16. CAB DOOR AND HINGES REPLACEMENT

THIS TASK COVERS:

a. Cab Door Removal
b. Cab Door Hinges Removal
c. Cab Door Hinges Installation
d. Cab Door Installation

INITIAL SETUP

APPLICABLE MODELS
All

MATERIALS/PARTS
Two locknuts

REFERENCES (TM)
TM 9-2320-260-10
TM 9-2320-260-20P

EQUIPMENT CONDITION
- Parking brake set (TM 9-2320-260-10).
- Cab door handles and lock removed (para. 11-19).
- Cab door dovetail wedge removed (para. 11-13).
- Cab door weatherseals removed (para. 11-20).
- Cab door window regulator and handle removed (para. 11-18).
- Cab door check rod removed (para. 11-22).

a. Cab Door Removal

1. Remove two locknuts (6), washers (7), and hinge screws (1) from three mirror braces (2) and four hinge leaves (4) and (8). Discard locknuts (6).

NOTE

Assistant will help with step 2.

2. Remove cab door (5) from hinge leaves (8).

b. Cab Door Hinges Removal

Remove sixteen screws (3) and two hinge leaves (4) from cab door (5) and two hinge leaves (8) from A-pillar (10) of cab (9).

c. Cab Door Hinges Installation

Install two hinge leaves (4) on cab door (5) and two hinge leaves (8) on A-pillar (10) of cab (9) with sixteen screws (3).

d. Cab Door Installation

NOTE

Assistant will help with step 1.

1. Lift cab door (5) and aline two hinge leaves (4) with two hinge leaves (8) and three mirror braces (2).
2. Install two hinge screws (1) through three mirror braces (2) and four hinge leaves (4) and (8).
3. Install two washers (7) and new locknuts (6) on hinge screws (1).

11-16. CAB DOOR AND HINGES REPLACEMENT (Contd)

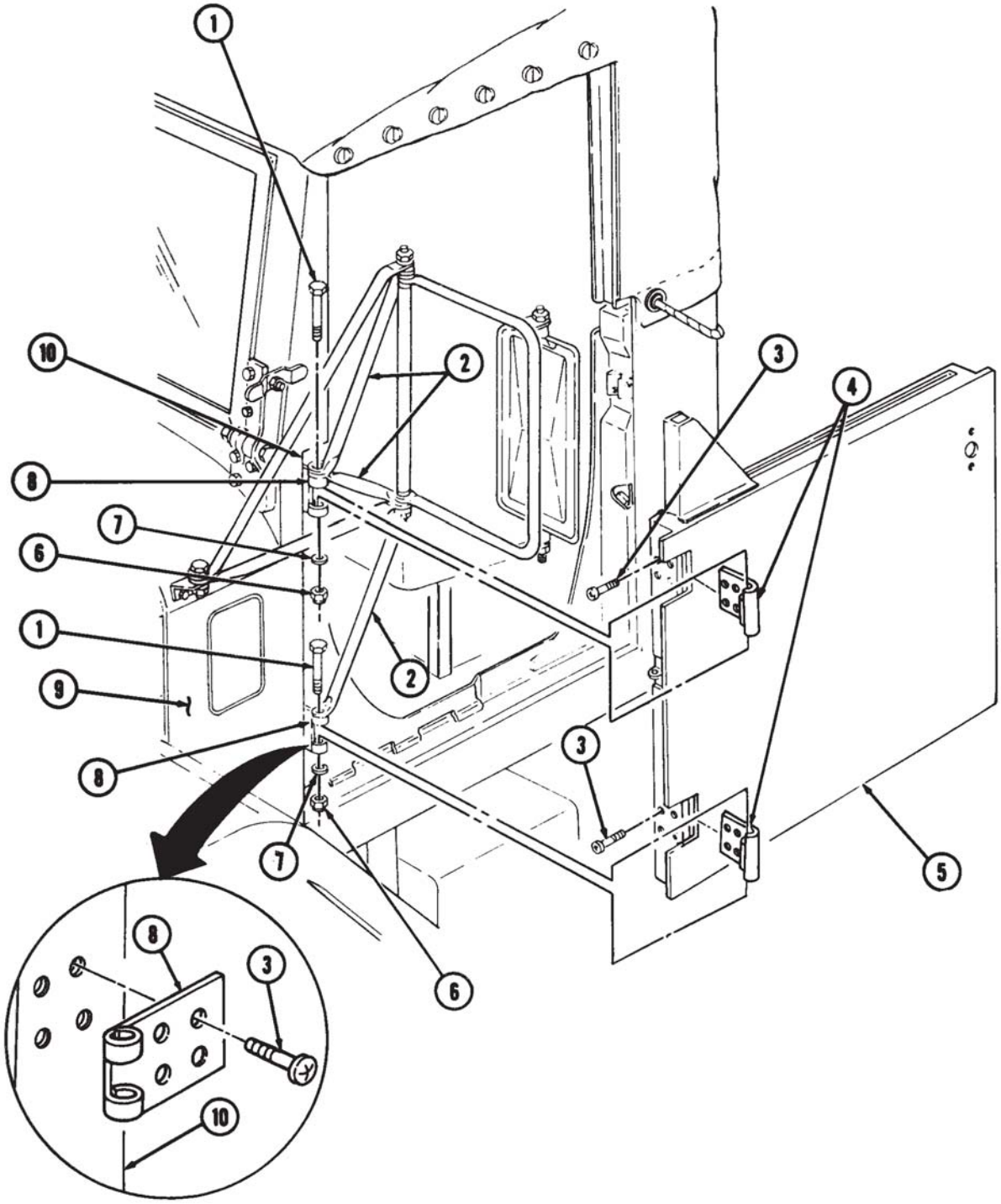

FOLLOW-ON TASKS: . Install cab door weatherseals (para. 11-20).
- Install cab door check rod (para. 11-22).
- Install cab door window regulator and handle (para. 11-18).
- Install cab door dovetail wedge (para. 11-13).
- Install cab door handles and lock (para. 11-19).

11-17. CAB DOOR GLASS AND WEATHERSEAL MAINTENANCE

THIS TASK COVERS:

a.. Removal
b. Installation
c. Cab Door Glass Adjustment

INITIAL SETUP

APPLICABLE MODELS
All

MATERIALS/PARTS
Two fasteners
Lockwasher

REFERENCES (TM)
TM 9-2320-260-10
TM 9-2320-260-20P

EQUIPMENT CONDITION
- Parking brake set (TM 9-2320-260-10).
- Cab door access cover removed (para. 11-12).

a. Removal

1. Lower cab door glass (1) so regulator channels (3) are accessible through cab door (2).

NOTE

Mark position of regulator stop brackets for installation.

2. Remove screw (4), lockwasher (5), and window regulator bracket (6) from regulator channel (3). Discard lockwasher (5).
3. Remove two fasteners (8) from window regulator arm studs (7). Discard two fasteners (8).
4. Pull two regulator arm studs (7) out of regulator channels (3) and remove cab door glass (1) from cab door (2).
5. Remove weatherseal (10) from cab door (2).
6. Remove five clips (9) from weatherseal (10).

b. Installation

1. Install five clips (9) on weatherseal (10) and aline clips (9) with panel slots (11).
2. Install weatherseal (10) and five clips (9) on cab door (2) so clips (9) snap into corresponding panel slots (11).
3. Position cab door glass (1) in cab door (2) and install two window regulator arm studs (7) through regulator channels (3).
4. Install two new fastenera (8) on window regulator arm studs (7).
5. Install window regulator bracket (6) on regulator channel (3) with new lockwaaher (5) and screw (4). Do not tighten screw (4).

c. Cab Door Glass Adjustment

1. Raise cab door glass (1) to full up position.

NOTE

Ensure cab door glass meets glass seal at top with door in closed position.

2. If glass does not seal at top, move glass up until it meets seal.
3. Lower cab door glass (1) and tighten screw (4).

11-17. CAB DOOR GLASS AND WEATHERSEAL MAINTENANCE (Contd)

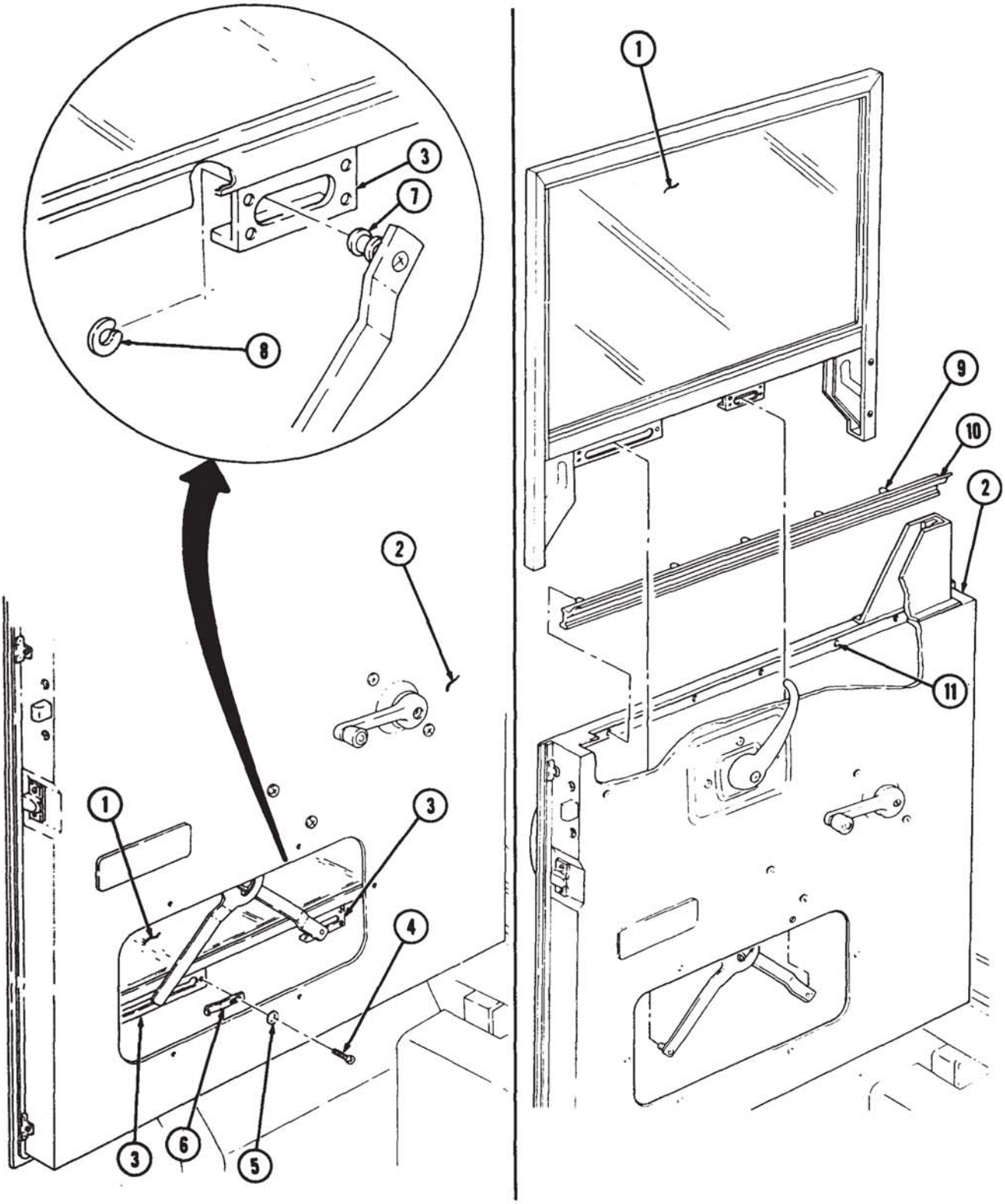

FOLLOW-ON TASK: Install cab door access cover (para. 11-12).

11-18. CAB DOOR WINDOW REGULATOR AND HANDLE REPLACEMENT

THIS TASK COVERS:

a. Window Regulator Handle Removal
b. Window Regulator Removal
c. Window Regulator Installation
d. Window Regulator Handle Installation

INITIAL SETUP

APPLICABLE MODELS
All

REFERENCES (TM)
TM 9-2320-260-10
TM 9-2320-260-20P

EQUIPMENT CONDITION
- Parking brake set (TM 9-2320-260-10).
- Cab door glass removed (para. 11-17).

a. Window Regulator Handle Removal

Remove screw (6), window regulator handle (5), and washer (4) from cab door window regulator (7).

b. Window Regulator Removal

NOTE

Cab door window regulator must be supported as last screw is removed.

1. Remove four screws (3) from inner door panel (2) and cab door window regulator (7).
2. Slide regulator arm stud (8) out of stationary track (9) and remove cab door window regulator (7) through cab door (1).

c. Window Regulator Installation

1. Position window regulator (7) through cab door (1) and slide regulator arm stud (8) into stationary track (9).

NOTE

Regulator arm stud must be held in stationary track when installing window regulator to inner door panel.

2. Install window regulator (7) on inner door panel (2) with four screws (3).

d. Window Regulator Handle Installation

Install washer (4) and window regulator handle (5) on window regulator (7) with screw (6).

11-18. CAB DOOR WINDOW REGULATOR AND HANDLE REPLACEMENT (Contd)

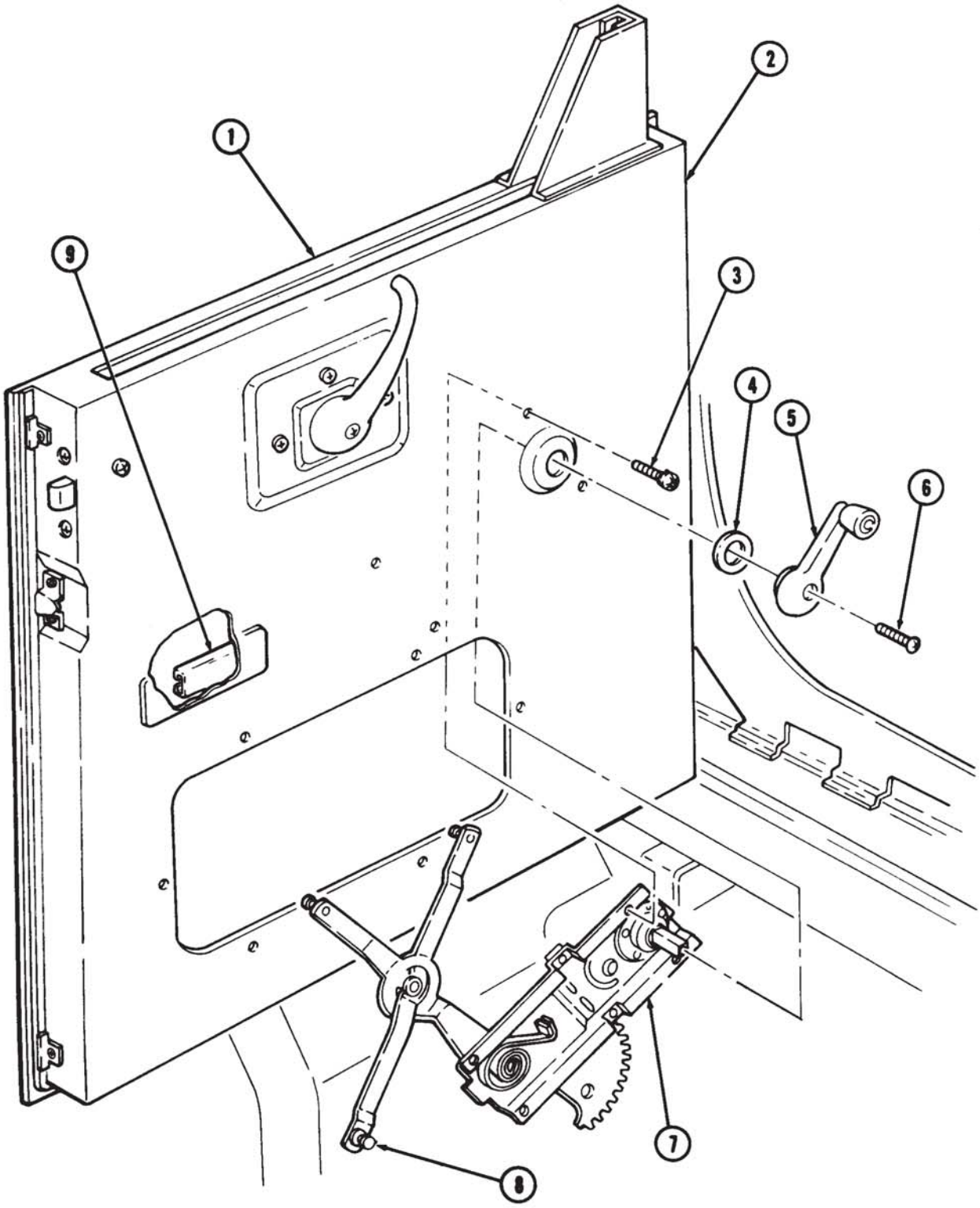

FOLLOW-ON TASK: Install cab door glass (para. 11-17).

11-19. CAB DOOR HANDLES AND LOCK REPLACEMENT

THIS TASK COVERS:

a. Outside Door Handle Removal
b. Inside Door Handle Removal
c. Cab Door Lock Removal
d. Cab Door Lack Installation
e. Inside Door Handle Installation
f. Outside Door Handle Installation

INITIAL SETUP

APPLICABLE MODELS
All

MATERIALS/PARTS
Six screw-assembled lockwashers

REFERENCES (TM)
TM 9-2320-260-10
TM 9-2320-260-20P

EQUIPMENT CONDITION
- Parking brake set (TM 9-2320-260-10).
- Cab door access cover removed (para. 11-12).

a. Outside Door Handle Removal

1. Remove two screws (1) from outside door handle (8) and door (4).
2. Rotate door handle (8) 1/4-turn counterclockwise and remove horn cab door (4).

b. Inside Door Handle Removal

Remove screw (5), door handle (3), and washer (2) from cab door lock (7).

c. Cab Door Lock Removal

1. Remove six screw-assembled lockwashers (6) from cab door (4) and door lock (7). Discard screw-assembled lockwashers (6).
2. Remove cab door lock (7) through access hole in cab door (4).

d. Cab Door Lock Installation

1. Position cab door lock (7) through access hole in cab door (4).
2. Install cab door lock (7) on cab door (4) with six new screw-assembled lockwashers (6).

e. Inside Door Handle Installation

Install washer (2) and door handle (3) on cab door lock (7) with screw (5).

f. Outside Door Handle Installation

Install outside door handle (8) on cab door (4) with two screws (1).

11-19. CAB DOOR HANDLES AND LOCK REPLACEMENT (Contd)

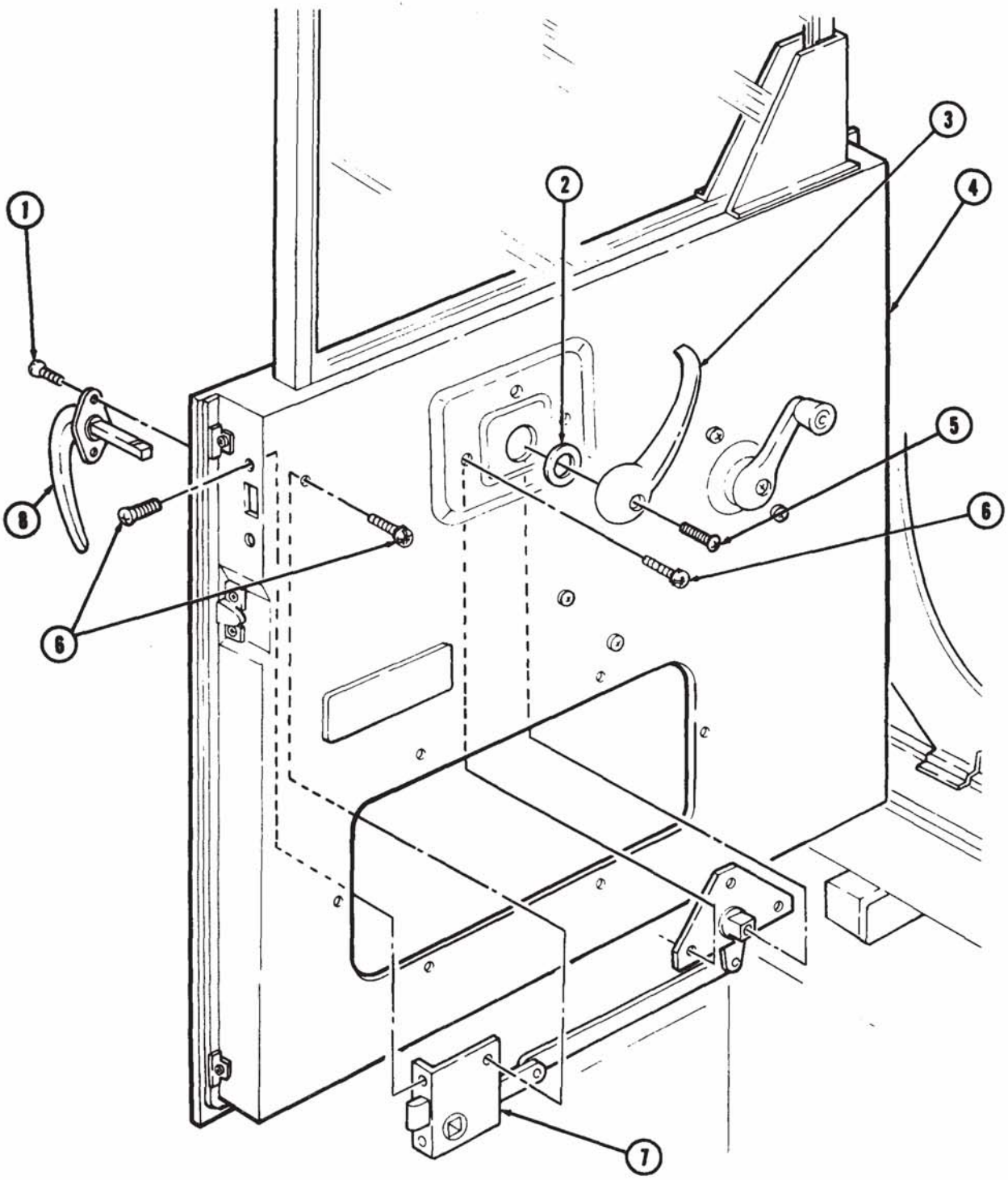

FOLLOW-ON TASK: Install cab door access cover (para. 11-12).

11-20. CAB DOOR WEATHERSEALS REPLACEMENT

THIS TASK COVERS:

a. WeatherSeals Removal
b. Head Weatherseal Removal
c. Pillar Post Weatherseals Removal
d. Pillar Post Weatherseals Installation
e. Head WeatherSeal Installation
f. Weatherseals Installation

INITIAL SETUP

APPLICABLE MODELS
All

MATERIALS/PARTS
Adhesive (Appendix C, Item 2)

REFERENCES (TM)
TM 9-2320-260-10
TM 9-2320-260-20P

EQUIPMENT CONDITION
Parking brake set (TM 9-2320-260-10).

a. Weatherseals Removal

1. Remove five screws (12), clips (11), and weatherseal (13) from cab door (14). Clean weatherseal (13) remains from cab door (14).
2. Remove weatherseal (10) from cab door (14). Clean weatherseal (10) remains from cab door (14).

b. Head Weatherseal Removal

1. Remove head weatherseal (4) from retainer (3).
2. Remove nine screws (2) and retainer (3) from cab soft top post (6).

c. Pillar Post Weatherseals Removal

1. Remove pillar post weatherseals (9), (15), and (8) from retainers (1), (17), and (5).
2. Remove twelve screws (7) and (16) and retainers (1), (17), and (5) from pillar post (18) and cab soft top post (6).

d. Pillar Post Weatherseals Installation

1. Install retainers (l), (17), and (5) on pillar post (18) and cab soft top post (6) with twelve screws (7) and (16).
2. Install pillar post weatherseal (9), (15), and (8) on retainers (1), (17), and (5).

e. Head Weatherseal Installation

1. Install retainer (3) on cab soft top post (6) with nine screws (2).
2. Install head weatherseal (4) on retainer (3).

f. Weatherseals Installation

1. Apply adhesive to mounting side of weatherseal (13) and cab door (14) mounting surface.
2. Install weatherseal (13) on cab door (14) with five clips (11) and screws (12).
3. Apply adhesive to mounting side of weatherseal (10) and cab door (14) mounting surface.
4. Install weatherseal (10) on cab door (14).

11-20. CAB DOOR WEATHERSEALS REPLACEMENT (Contd)

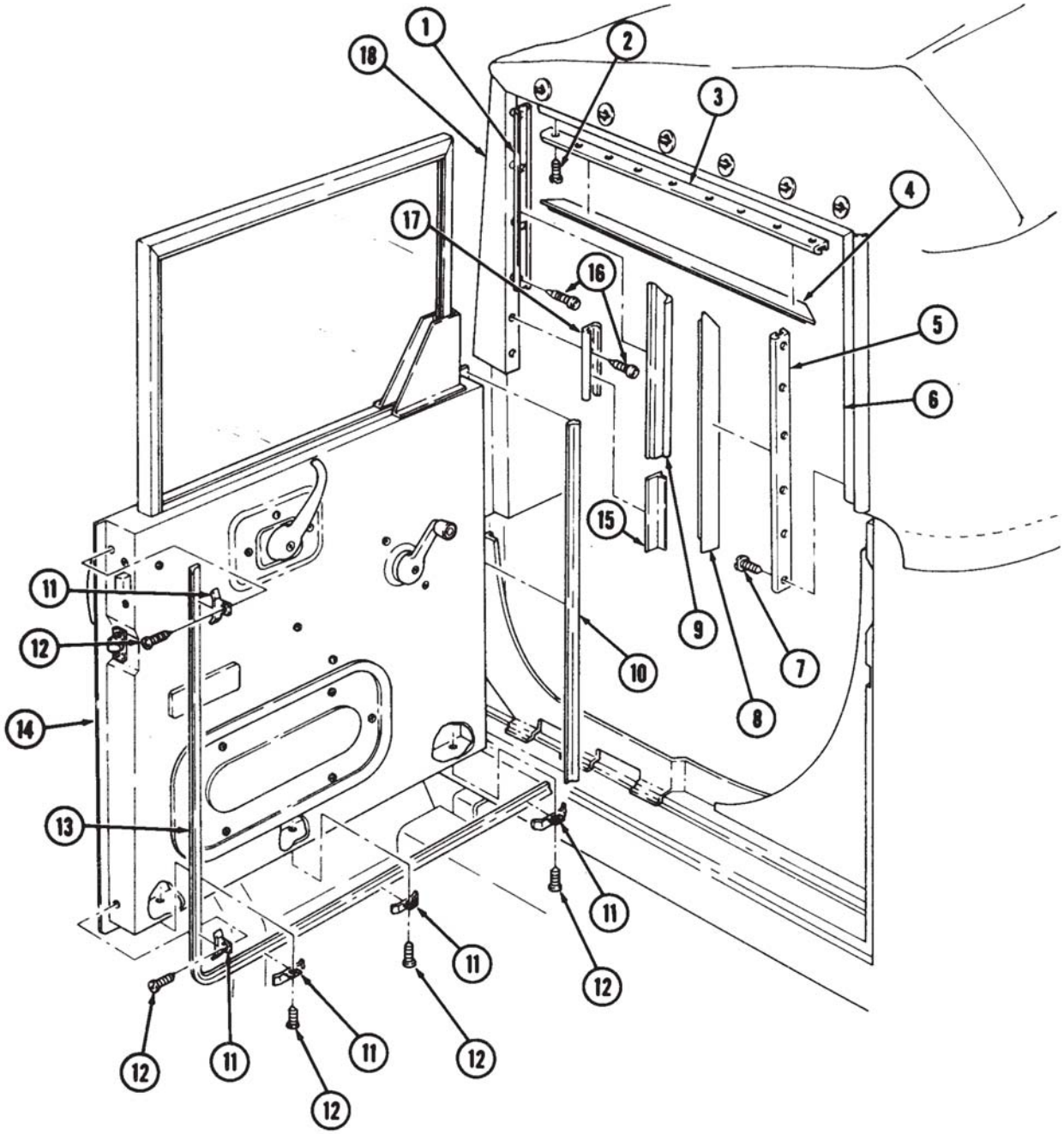

11-21. CAB COWL VENT MAINTENANCE

THIS TASK COVERS:

a. Removal
b. Inspection
c. Installation

INITIAL SETUP

APPLICABLE MODELS
All

MATERIALS/PARTS
Cotter pin
Seal
Adhesive (Appendix C, Item 2)

REFERENCES (TM)
TM 9-2320-260-10
TM 9-2320-260-20P

EQUIPMENT CONDITION
Parking brake set (TM 9-2320-260-10).

a. Removal

1. Remove nine screws (4) and cowl vent screen (5) from kick panel (1).
2. Remove cotter pin (8), hinge pin (3), and cab cowl vent door (6) from bracket (2). Discard cotter pin (8). .

b. Inspection

Inspect cab cowl vent door seal (7). If damaged, remove seal (7) and clean seal (7) debris from cab cowling mounting surface (9).

c. Installation

NOTE

Perform steps 1 and 2 only if cab cowl vent door seal was removed.

1. Apply adhesive to mounting side of cab cowl vent door seal (7) and cab cowling seal mounting surface (9).
2. Install cab cowl vent door seal (7) on cab cowling seal mounting surface (9).
3. Install cab cowl vent door (6) and hinge pin (3) on bracket (2) with new cotter pin (8).
4. Install cab cowl vent screen (5) on kick panel (1) with nine screws (4).

11-21. CAB COWL VENT MAINTENANCE (Contd)

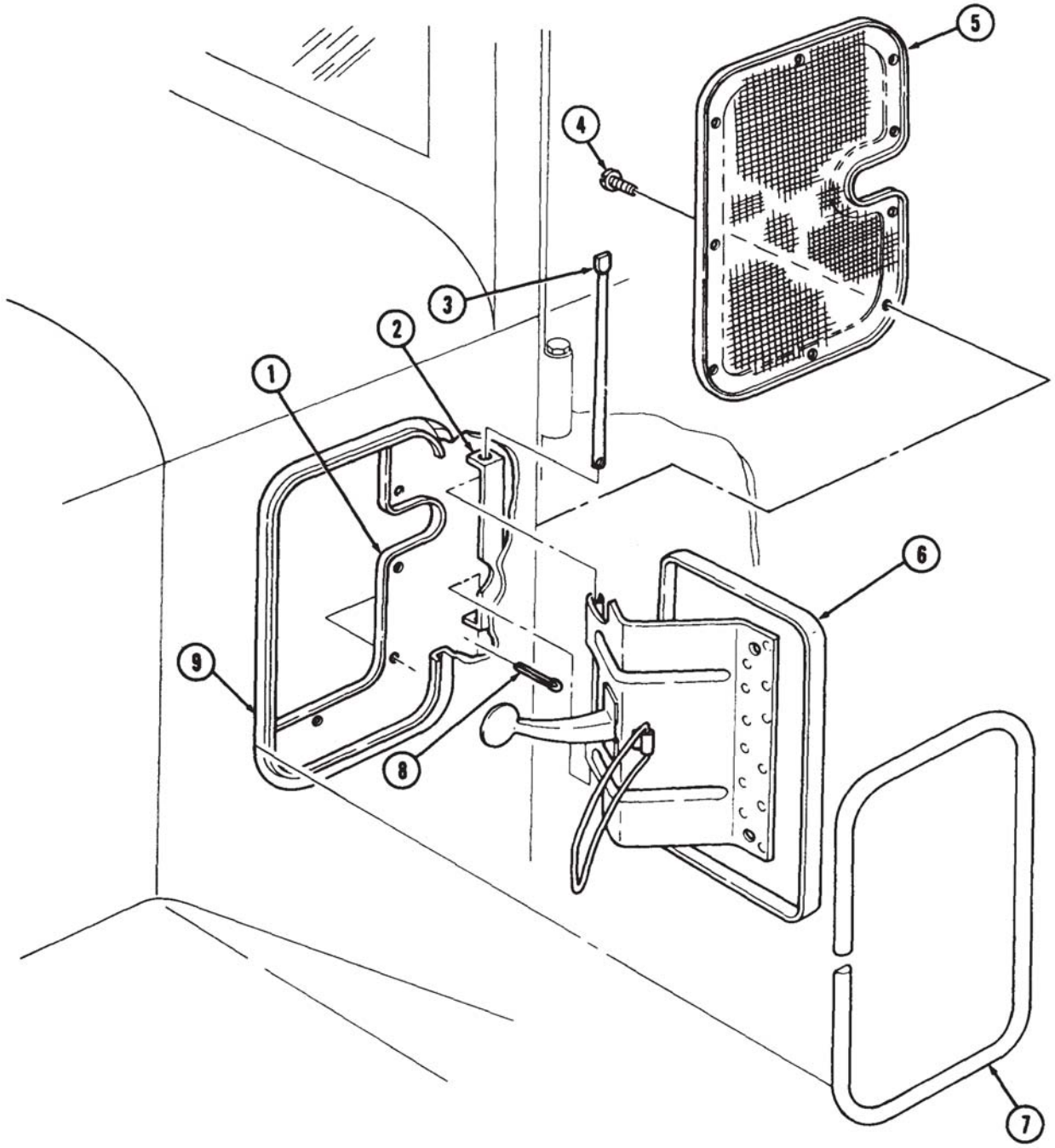

11-22. CAB DOOR CHECK ROD REPLACEMENT

THIS TASK COVERS:

a. Removal **b. Installation**

INITIAL SETUP

APPLICABLE MODELS
All

MATERIALS/PARTS
Cotter pin

REFERENCES (TM)
TM 9-2320-260-10
TM 9-2320-260-20P

EQUIPMENT CONDITION
Parking brake set (TM 9-2320-260-10).

a. Removal

1. Remove cotter pin (1) from cab door check rod (2) and cab door (3). Discard cotter pin (1).
2. Open vent door (6) and remove cab door check rod (2) and pad (5) from pillar (4).
3. Remove pad (5) from rod (2).

b. Installation

1. Install pad (5) on cab door check rod (2) and insert cab door check rod (2) through pillar (4).
2. Install cab door check rod (2) on cab door (3) with new cotter pin (1).

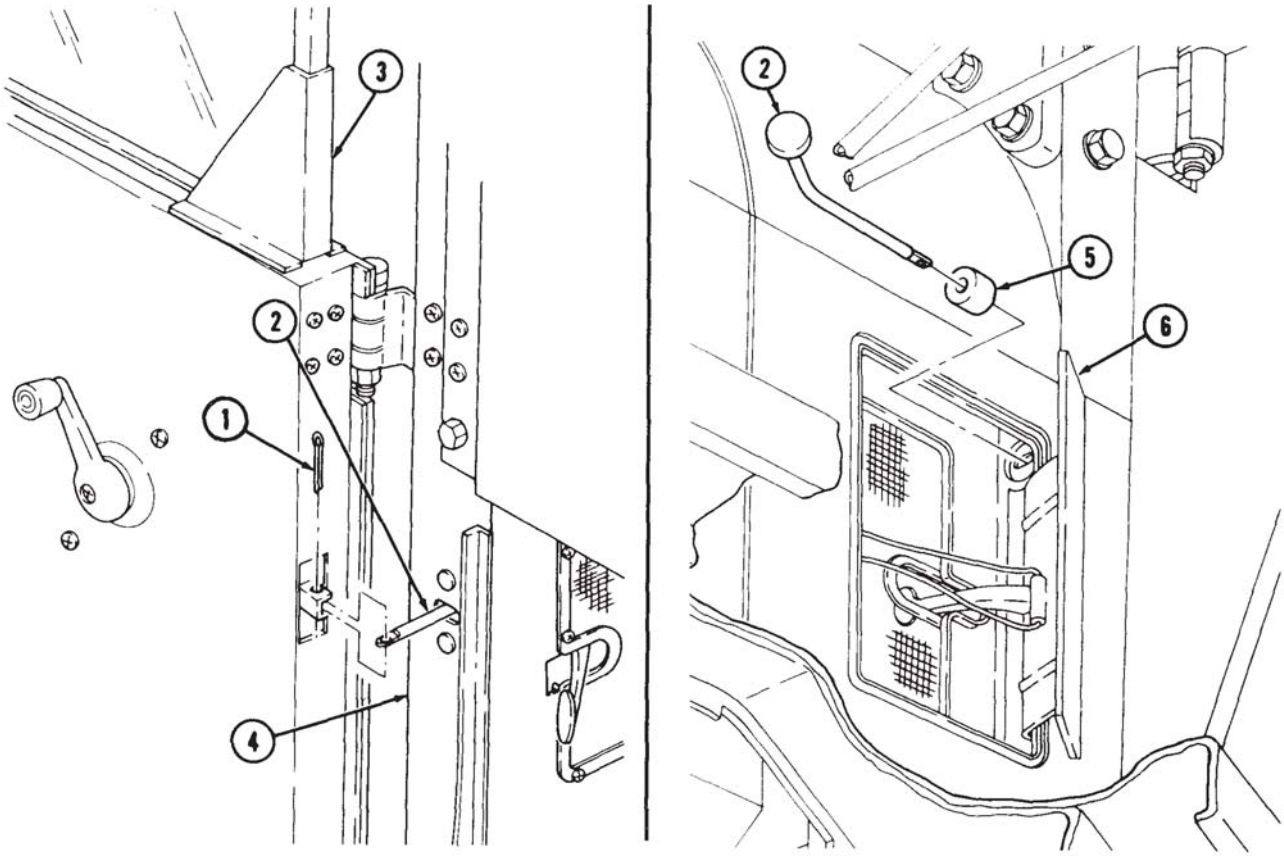

11-23. CAB REINFORCEMENT PANEL REPLACEMENT

THIS TASK COVERS:

a. Removal **b. Instaliation**

INITIAL SETUP

APPLICABLE MODELS
All

MATERIALS/PARTS
Eleven locknuts

REFERENCES ('TM)
TM 9-2320-260-10
TM 9-2320-260-20P

EQUIPMENT CONDITION
Parking brake set (TM 9-2320-260-10).

a. Removal

Remove eleven locknuts (4), screws (2), and cab reinforcement panel (1) from cab (3). Discard locknuts (4).

b. Installation

Install cab reinforcement panel (1) on cab (3) with eleven screws (2) and new locknuts (4).

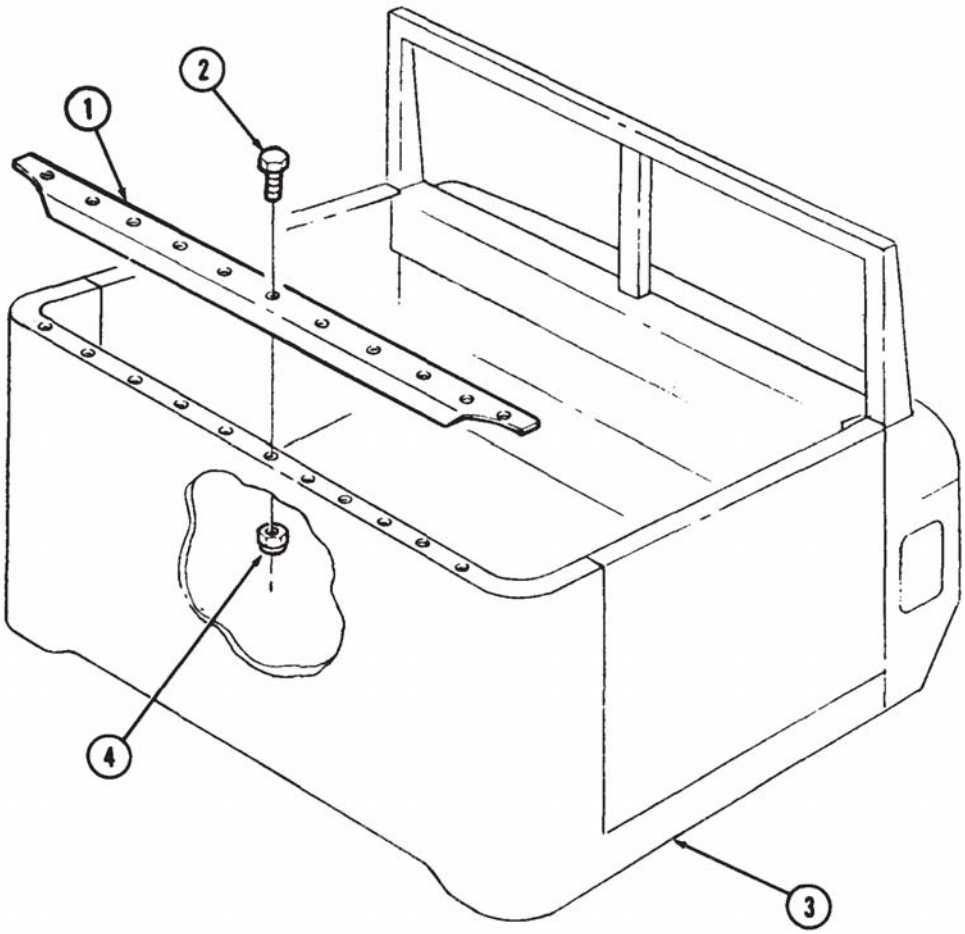

11-24. MACHINE GUN MOUNT BRACKET REPLACEMENT

THIS TASK COVERS:

a. Removal **b. Installation**

INITIAL SETUP

APPLICABLE MODELS
All except M815, M820, M820A1, M820A2

REFERENCES (TM)
TM 9-2320-280-20P

EQUIPMENT CONDITION
Machine gun mount assembly removed (para. 14-33).

a. Removal

Remove fourteen screws (2) and machine gun mount (3) from cab (1).

b. Installation

Install machine gun mount (3) on cab (1) with fourteen screws (2).

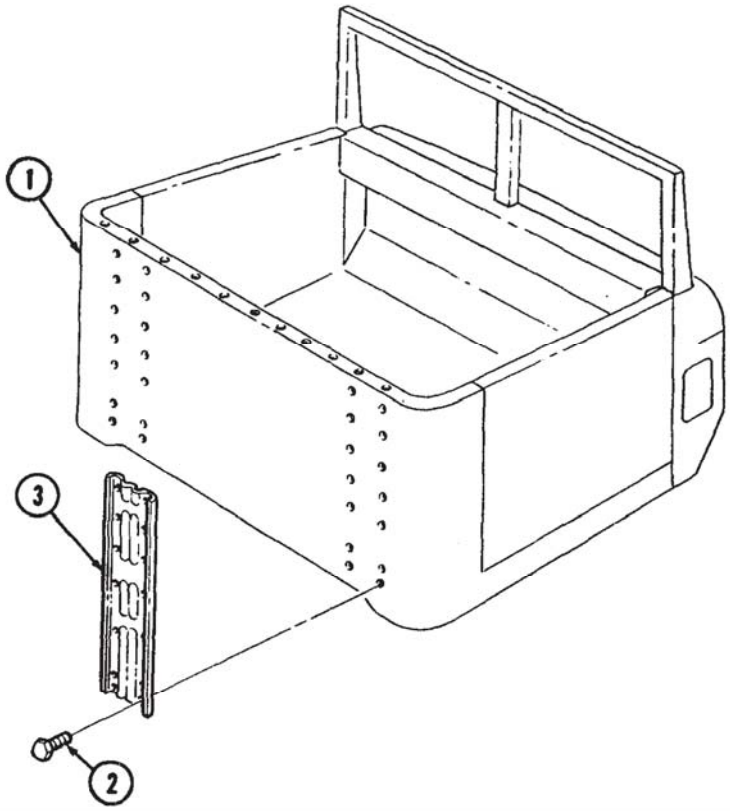

FOLLOW-ON TASK: Install machine gun mount assembly (para. 14-33).

11-25. STEERING GEAR SHIELD REPLACEMENT

THIS TASK COVERS:

a. Removal **b. Installation**

INITIAL SETUP

APPLICABLE MODEIS
All

MATERIALS/PARTS
Three locknuts

REFERENCES (TM)
TM 9-2320-260-10
TM 9-2320-260-20P

EQUIPMENT CONDITION
Parking brake set (TM 9-2320-260-10).

a. Removal

Remove three screws (3), washers (2), locknuts (l), and steering gear shield (5) from frame (4). Discard locknuts (1).

b: Installation

Install steering gear shield (5) on frame (4) with three screws (3), washers (2), and new locknuts (1).

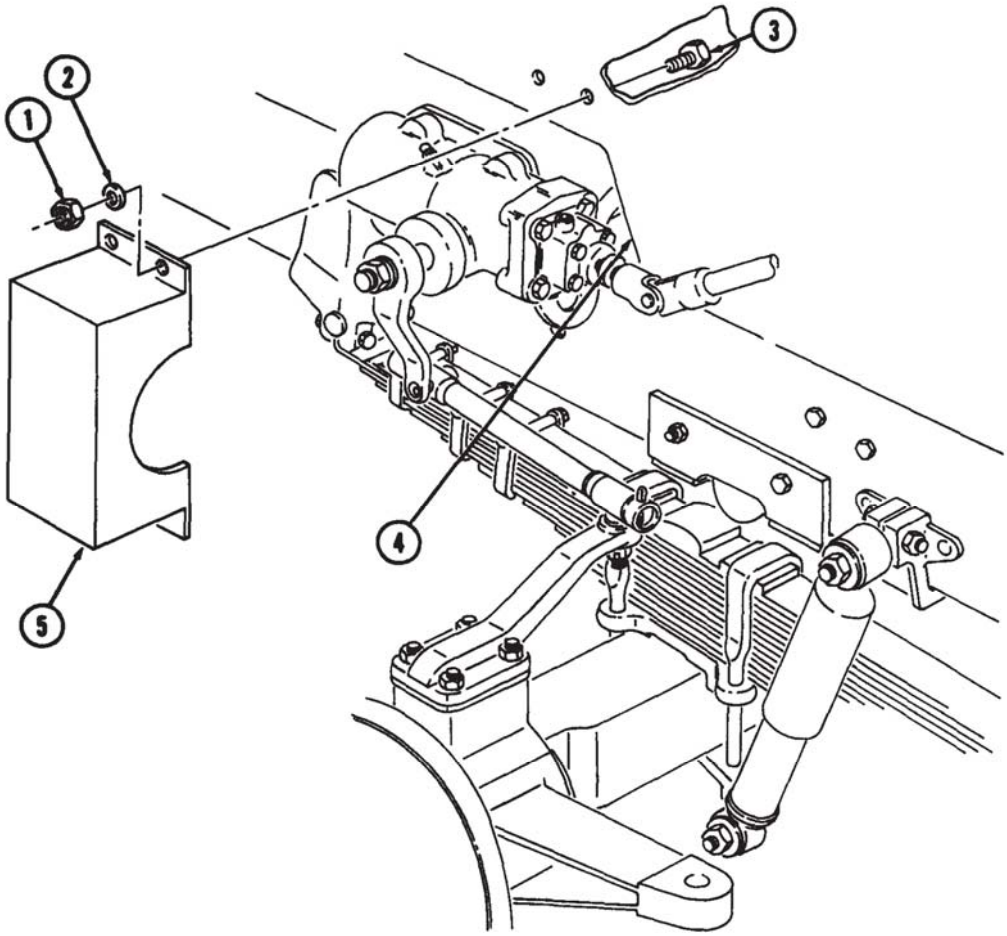

11-26. POWER STEERING ASSIST CYLINDER FRONT AND SIDE SHIELDS REPLACEMENT

THIS TASK COVERS:

a. Removal **b. Installation**

INITIAL SETUP

APPLICA8LE MODELS
All

MATERIALS/PARTS
Five locknuts
External-tooth lockwasher

REFERENCES (TM)
TM 9-2320-260-10
TM 9-2320-260-20P

EQUIPMENT CONDITION
Parking brake set (TM 9-2320-260-10).

a. Removal

1. Remove three screws (9), washers (8), locknuts (11), and front shield (10) from fender support shield (7) and side shield (13). Discard locknuts (11).
2. Remove screw (5), two washers (6), and locknut (12) from side shield (13). Discard locknut (12).
3. Remove locknut (4), alternator ground cable connector (3), external-tooth lockwasher (2), screw (15), washer (14), and side shield (13) from frame (16) and fender (1). Discard locknut (4) and lockwasher (2).

b. Installation

1. Install side shield (13) on fender (1) and frame (16) with screw (15), washer (14), new external-tooth lockwasher (2), alternator ground cable connector (3), and new locknut (4).
2. Install top of side shield (13) on frame (16) with screw (5), two washers (6), and new locknut (12).
3. Install front shield (10) on fender support shield (7) and side shield (13) with three screws (9), washers (8), and new locknuts (11).

11-26. POWER STEERING ASSIST CYLINDER FRONT AND SIDE SHIELDS REPLACEMENT (Contd)

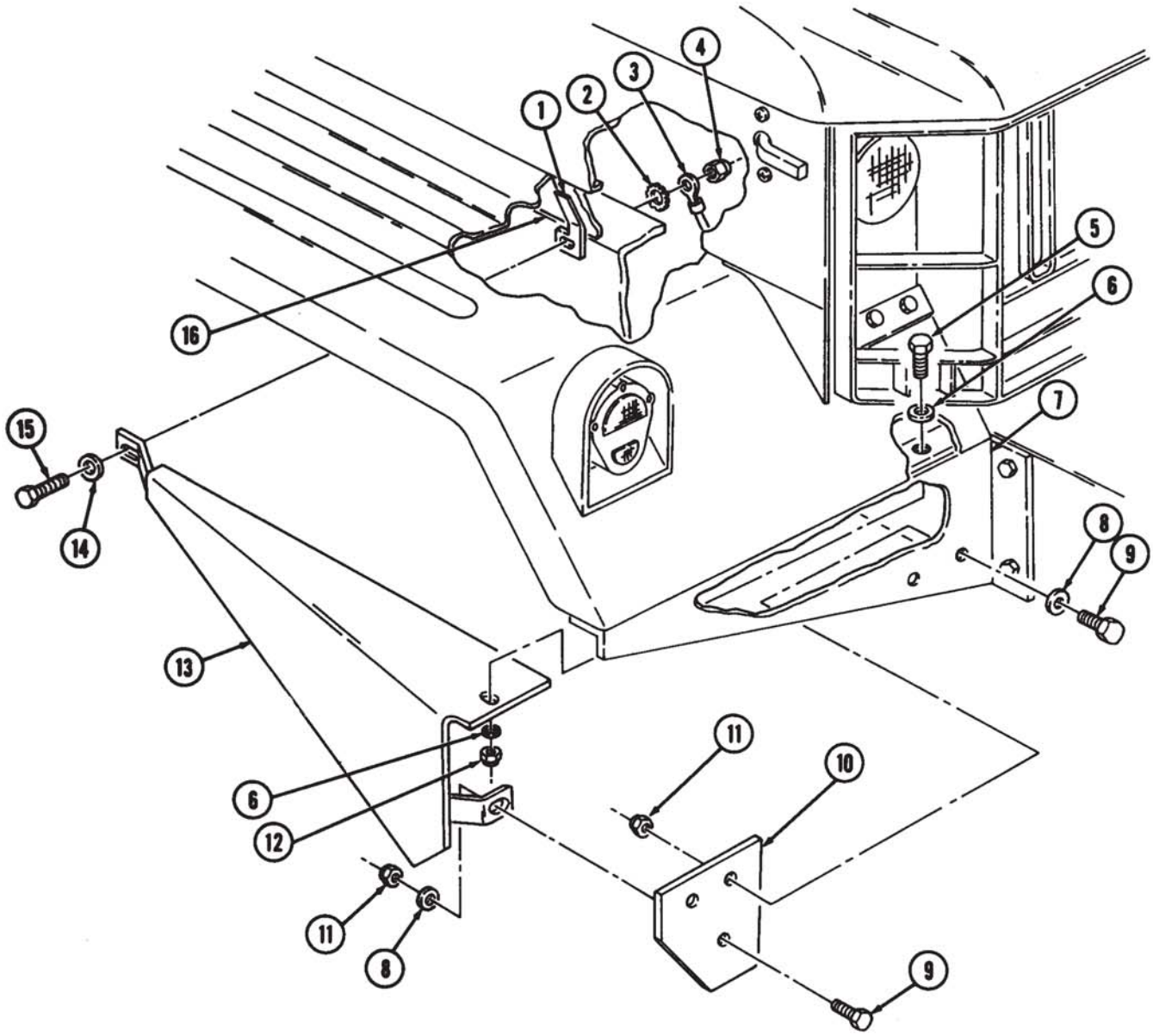

11-27. WINDSHIELD ARM, GLASS, AND HANDLE REPLACEMENT

THIS TASK COVERS:

a. Arm Removal
b. Glass Removal
c. Handle Removal
d. Handle Installation
e. Glass Installation
f. Arm Installation

INITIAL SETUP

APPLICABLE MODELS
All

MATERIALS/PARTS
Nine screw-assembled lockwashers
Bumper
Adhesive (Appendix C, Item 2)

REFERENCES (TM)
TM 9-2320-260-10
TM 9-2320-260-20P

EQUIPMENT CONDITION
- Parking brake set (TM 9-2320-260-10).
- Wiper motor removed (para. 11-37).

a. Arm Removal

Remove two screws (8) and spring washers (9) from arm (10), outer frame bracket (5), lever (11), and glass frame bracket (15).

b. Glass Removal

1. Remove seven screw-assembled lockwashers (21) and windshield hinge (3) from windshield outer frame (4). Discard screw-assembled lockwashers (21).
2. Remove two seals (1) and seal (2) from windshield hinge (3). Remove seal (14) from windshield inner frame (20).

c. Handle Removal

1. Remove two screws (17), nuts (18), and handle (19) from windshield inner frame (20).
2. Remove bumper (16) from handle (19). Discard bumper (16).
3. Remove two screw-assembled lockwashers (6) and plate (7) from windshield outer frame (4). Discard screw-assembled lockwashers (6).
4. Remove thumbscrew (13), washer (12), and lever (11) from arm (10).

d. Handle Installation

1. Install lever (11) on arm (10) with washer (12) and thumbscrew (13).
2. Install new bumper (16) in handle (19).
3. Install handle (19) on windshield inner frame (20) with two screws (17) and nuts (18).
4. Install plate (7) on windshield outer frame (4) with two new screw-assembled lockwashers (6).

e. Glass Installation

1. Apply adhesive to mounting side of hinge seals (1) and (2), and on hinge (3).
2. Install two hinge seals (1) and seal (2) on hinge (3).
3. Install seal (14) on windshield inner frame (20).
4. Install hinge (3) on windshield outer frame (4) with seven new screw-assembled lockwashers (21).
5. Install windshield inner frame (20) on hinge (3).

11-27. WINDSHIELD ARM, GLASS, AND HANDLE REPLACEMENT (Contd)

f. Arm Installation

Install arm (10) on outer frame bracket (5) and install lever (11) on glass frame bracket (15) with two screws (8) and spring washers (9).

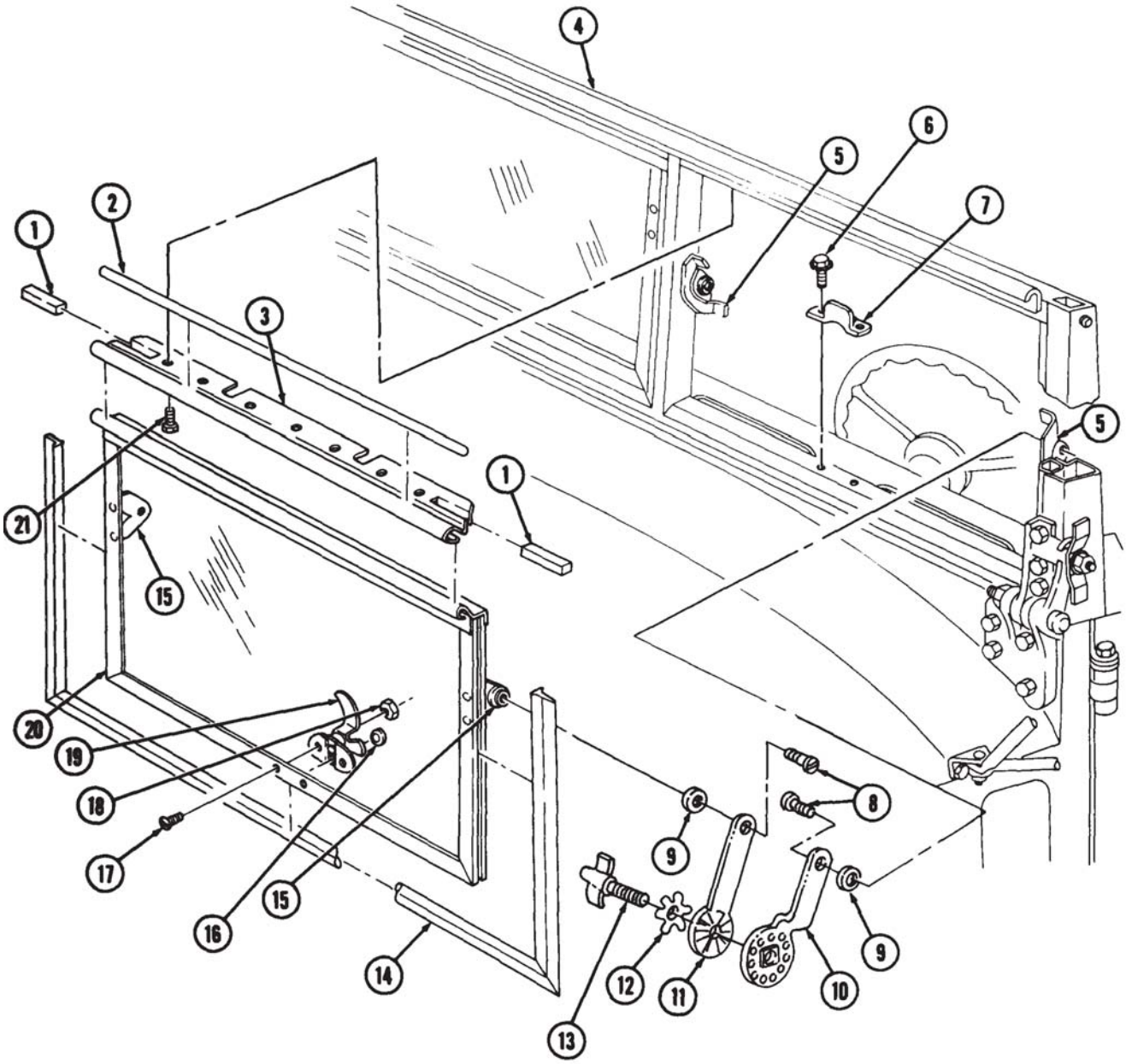

FOLLOW-ON TASK. Install wiper motor (para. 11-37).

11-28. WINDSHIELD REPLACEMENT

THIS TASK COVERS:

a. Removal b. Installation

INITIAL SETUP

APPLICABLE MODELS
All

MATERIALS/PARTS
Two lockwashers
Two locknuts
Fourteen screw-assembled lockwashers
Adhesive (Appendix C, Item 1)

REFERENCES (TM)
TM 9-2320-260-10
TM 9-2320-260-20P

EQUIPMENT CONDITION
- Parking brake set (TM 9-2320-260-10).
- Cab soft top removed (TM 9-2320-260-10).
- Wiper motor removed (para. 11-37).

a. Removal

NOTE

Perform steps 1 and 2 if vehicle is equipped with hardtop kit.

1. Remove two screws (8) and lockwashers (7) from cab hardtop (6) and windshield frame (5). Discard lockwashers (7).
2. Remove two screws (2), washers (3), and locknuts (4) from cab hardtop (6) and windshield frame (5). Discard locknuts (4).
3. Remove two knobs (11) and studs (20) from hinges (22).
4. Remove two nuts (19) and hinge bolts (16) from hinges (17) and remove windshield (5) from cab (9).
5. Remove eight screw-assembled lockwashers (18) and two hinges (17) from cab (9). Discard screw-assembled lockwashers (18).
6. Remove six screw-assembled lockwashers (21) and two hinges (22) from windshield frame (5). Discard screw-assembled lockwashers (21).
7. Remove four screws (10) and two brackets (12) from windshield frame (5).
8. Remove two screws (15), plate (14), and weatherstrip (13) from each bracket (12).
9. Remove weatherstrip (1) from windshield frame (5).

b. Installation

1. Apply adhesive to mounting side of weatherstrip (1) and windshield frame (5) mounting surface. Install weatherstrip (1) on mounting surface of windshield frame (5).
2. Install weatherstrip (13) and plate (14) on both brackets (12) with four screws (15).
3. Install two brackets (12) on windshield frame (5) with four screws (10).
4. Install two hinges (22) on windshield frame (5) with six new screw-assembled lockwashers (21),
5. Install two hinges (17) on cab (9) with eight new screw-assembled lockwashers (18).
6. Install two hinges (22) on hinges (17) and windshield (5) on cab (9) with two hinge bolts (16) and nuts (19).
7. Install two studs (20) and knobs (11) in hinges (22).

NOTE

Perform step 8 if vehicle is equipped with hardtop kit.

8. Install cab hardtop (6) on windshield frame (5) with two screws (2), washers (3), new locknuts (4), two screws (8), and new lockwashers (7).

11-28. WINDSHIELD REPLACEMENT (Contd)

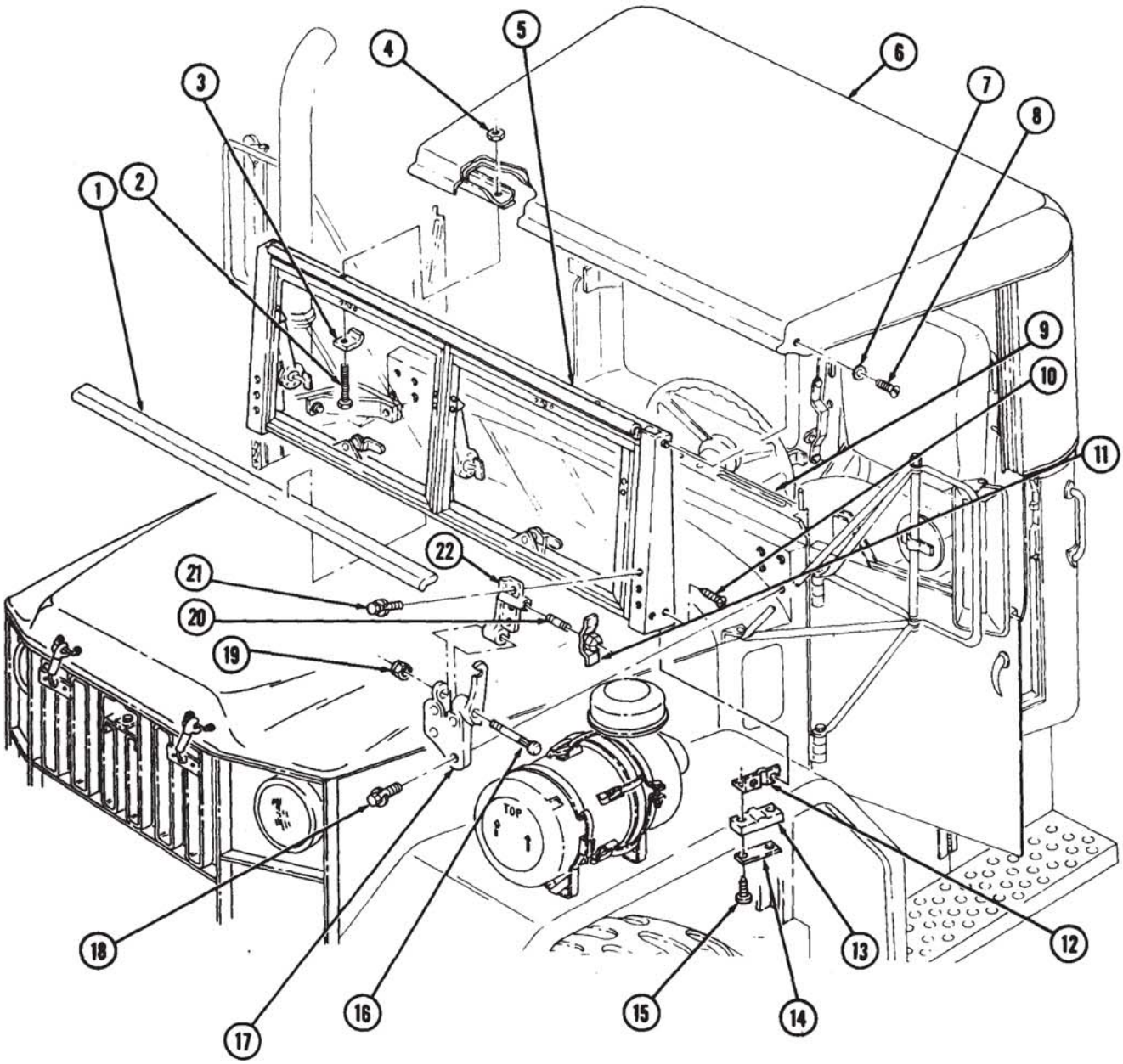

FOLLOW-ON TASKS: • Install wiper motor (para. 11-37).
• Install cab soft top (TM 9-2320-260-10).

11-29. UNDER CAB TOOLBOX REPLACEMENT

THIS TASK COVERS:

a. Removal **b. Installation**

INITIAL SETUP

APPLICABLE MODELS
All

MATERIALS/PARTS
Ten locknuts

REFERENCES (TM)
TM 9-2320-260-10
TM 9-2320-260-20P

EQUIPMENT CONDITION
Parking brake set (TM 9-2320-260-10).

a. Removal

1. Remove two screws (7) and locknuts (9) from braces (8) and supports (10). Discard locknuts (9).
2. Open toolbox door (1) and remove two locknuts (2) and screws (5) from stabilizers (4) and toolbox (3). Discard locknuts (2).
3. Remove six screws (6) and locknuts (11) from toolbox (3) and two supports (10). Discard locknuts (11).
4. Remove toolbox (3) from supports (10).

b. Installation

1. Install toolbox (3) on two supports (10) with six screws (6) and new locknuts (11).
2. Open toolbox door (1) and install toolbox (3) on two stabilizers (4) with two screws (5) and new locknuts (2).
3. Install two braces (8) on supports (10) with two screws (7) and new locknuts (9).

11-29. UNDER CAB TOOLBOX REPLACEMENT (Contd)

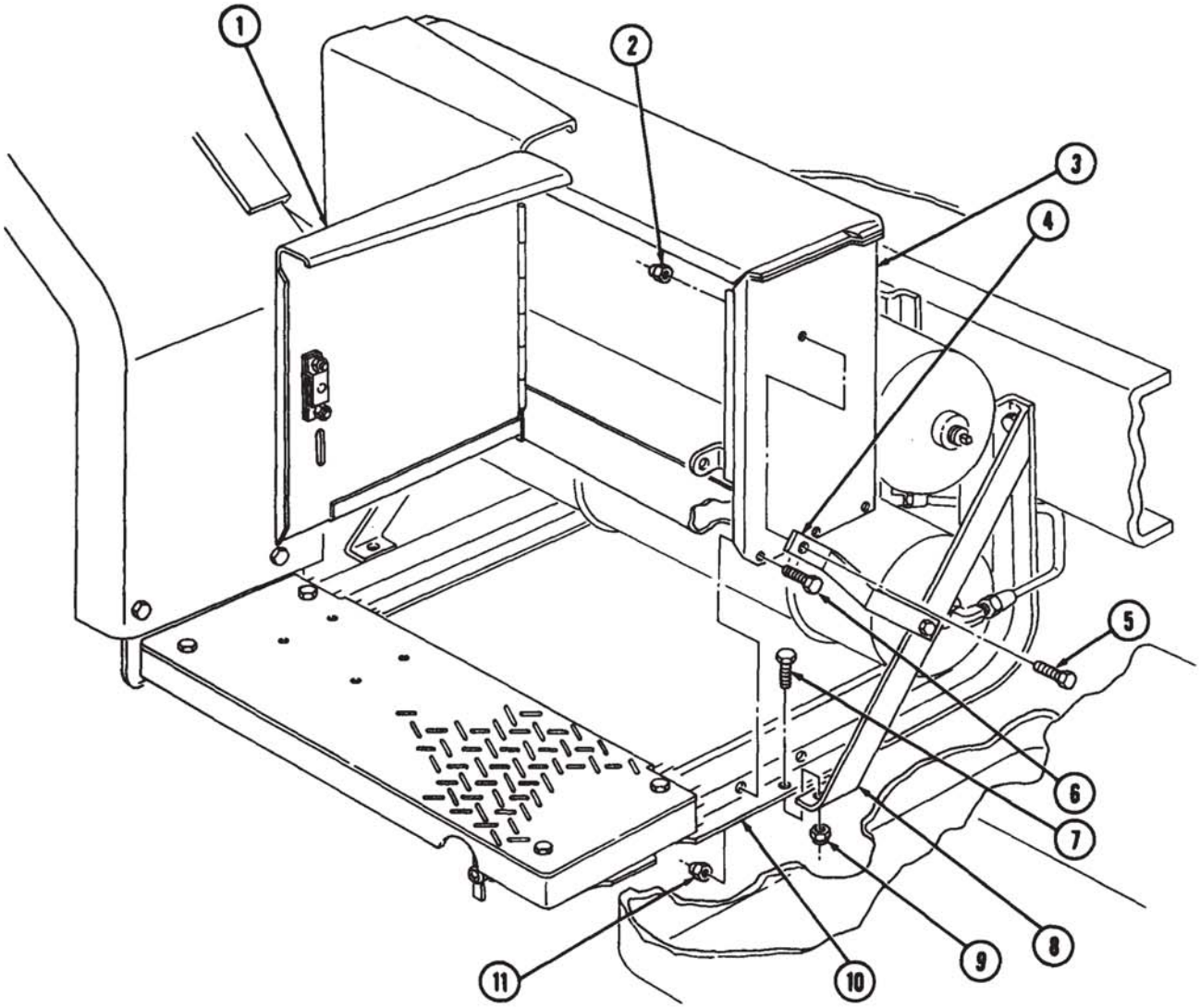

11-30. CAB TUNNELS REPLACEMENT

THIS TASK COVERS:

a. Tunnel Removal
b. Rear Tunnel Removal
c. Toeboard Removal
d. Toeboard Installation
e. Rear Tunnel Installation
f. Tunnel Installation

INITIAL SETUP

APPLICABLE MODELS
All

MATERIAIS/PARTS
Thirty-two screw-assembled lockwashers
Two locknuts

REFERENCES (TM]
TM 9-2320-260-10
TM 9-2320-260-20P

EQUIPMENT CONDITION
• Parking brake set (TM 9-2320-260-10).
Companion seat removed (para. 11-31).

a. Tunnel Removal

1. Remove thirteen screw-assembled lockwashers (4) and tunnel (3) from rear tunnel (8), toeboard (1), and cab floor (10). Discard screw-assembled lockwashers (4).

NOTE

Perform step 2 if vehicle is equipped with lever lock.

2. Remove two locknuts (9), screws (6), and lever lock (5) from tunnel (8). Discard locknuts (9).

b. Rear Tunnel Removal

Remove ten screw-assembled lockwashers (7) and rear tunnel (8) from cab floor (10). Discard screw-assembled lockwashers (7).

c. Toeboard Removal

Remove nine screw-assembled lockwashers (2) and toeboard (1) from cab floor (10). Discard screw-assembled lockwashers (2).

d. Toeboard Installation

Install toeboard (1) on cab floor (10) with nine new screw-assembled lockwashers (2).

e. Rear Tunnel Installation

Install rear tunnel (8) on cab floor (10) with ten new screw-assembled lockwashers (7).

f. Tunnel Installation

NOTE

Perform step 1 if vehicle is equipped with lever lock.

1. Install lever lock (5) on tunnel (8) with two screws (6) and new locknuts (9).
2. Install tunnel (3) on rear tunnel (8), toeboard (1), and cab floor (10) with thirteen new screw-assembled lockwashers (4).

11-30. CAB TUNNELS REPLACEMENT (Contd)

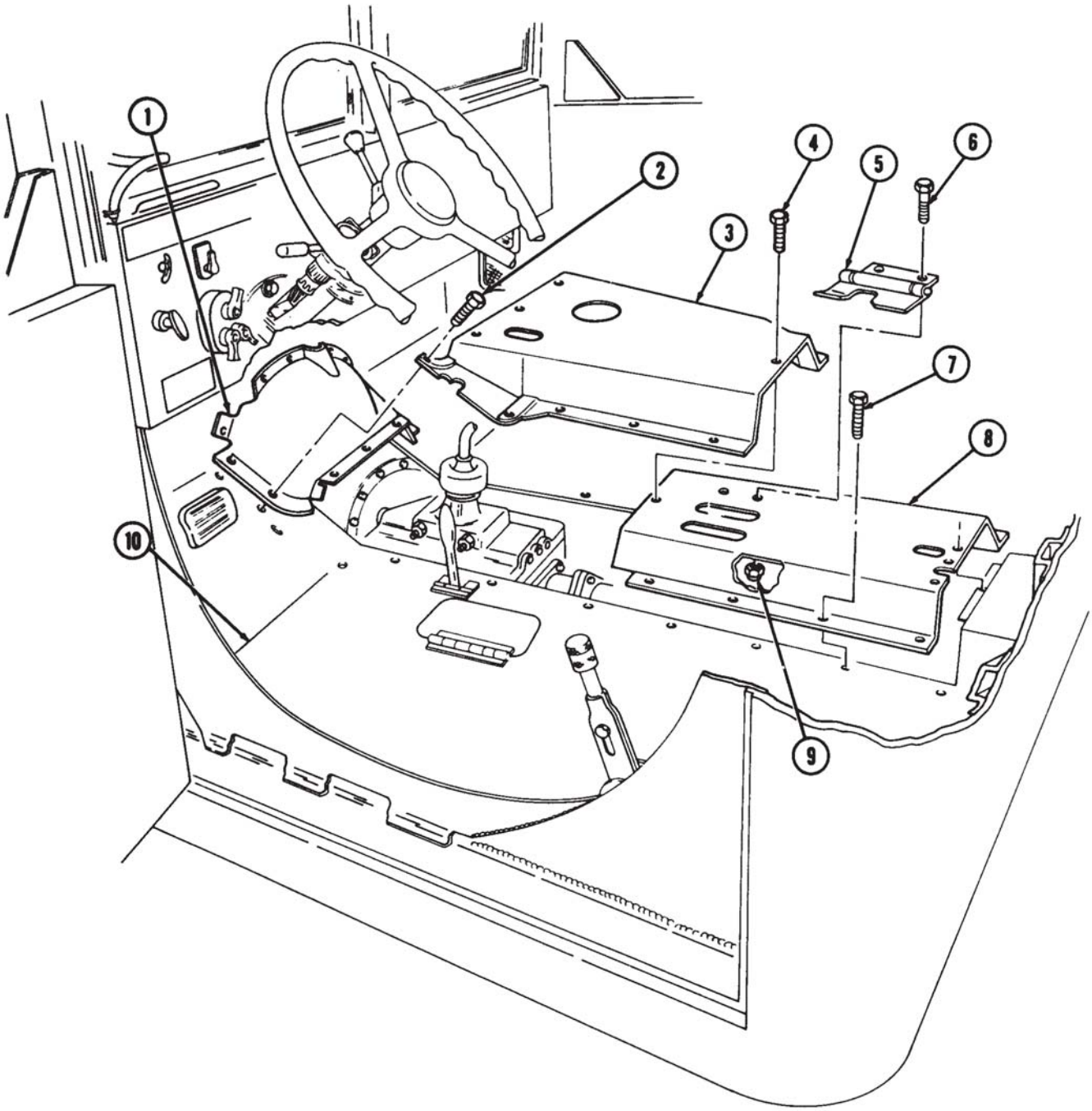

FOLLOW-ON TASK: Install companion seat (para. 11-31)

11-31. COMPANION SEAT MAINTENANCE

THIS TASK COVERS:

a. Companion Seat Backrest Removal
b. Companion Seat Cushion Removal
c. Companion Seat Removal
d. Frame Disassembly
e. Frame Assembly
f. Companion Seat Installation
g. Companion Seat Cushion Installation
h. Companion Seat Backrest Installation

INITIAL SETUP

APPLICABLE MODELS
All

MATERIAIS/PARTS
Six locknuts
Seven cotter pins

REFERENCES (TM)
TM 9-2320-260-10
TM 9-2320-260-20P

EQUIPMENT CONDITION
Parking brake set (TM 9-2320-260-10).

a. Companion Seat Backrest Removal

Remove backrest (1) from backrest frame (29).

b. Companion Seat Cushion Removal

1. Remove screw (4) and locknut (17) from link (15) and cushion (18). Discard locknut (17).
2. Remove cotter pin (25), washer (27), pin (28), and cushion (18) from frame (21). Discard cotter pin (25).

c. Companion Seat Removal

1. Unlatch fastener (7) from backrest frame (29).
2. Remove four screw-assembled washers (20) and cushion frame (21) from cab floor (13).

d. Frame Disassembly

1. Remove four cotter pins (3), washers (2), pins (6), and backrest frame (29) from link (5), link (26), and cushion frame (21). Discard cotter pins (3).
2. Remove locknut (19), screw (24), two washers (22), sleeve (23), and link (26) from cushion frame (21). Discard locknut (19).
3. Remove cotter pin (12), pin (16), and link (15) from cushion frame (21). Discard cotter pin (12).
4. Remove cotter pin (9), washer (8), and link (5) from cushion frame (21). Discard cotter pin (9).
5. Remove four locknuts (14), screws (10), and leg (11) from cushion frame (21). Discard locknuts (14).

11-31. COMPANION SEAT MAINTENANCE (Contd)

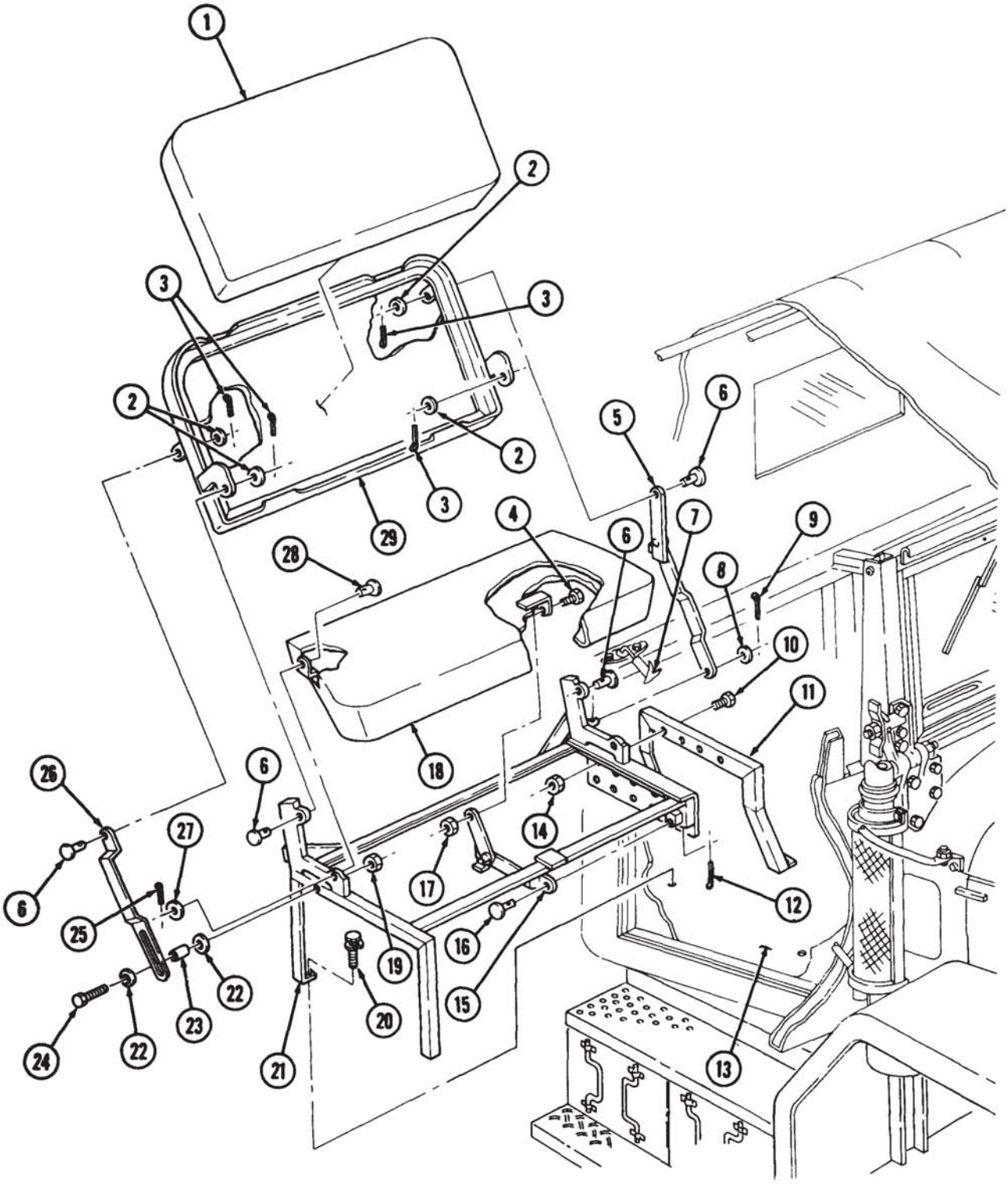

11-31. COMPANION SEAT MAINTENANCE (Contd)

e. Frame Assembly

1. Install leg (11) on cushion frame (21) with four screws (10) and new locknuts (14).
2. Install link (5) on cushion frame (21) with washer (8) and new cotter pin (9).
3. Install link (15) on cushion frame (21) with pin (16) and new cotter pin (12).
4. Install link (26) on cushion frame (21) with screw (24), two washers (22), sleeve (23), and new locknut (19).
5. Install links (5) and (26) on backrest frame (29) with four pins (6), washers (2), and new cotter pins (3).

f. Companion Seat Installation

1. Install cushion frame (21) on cab floor (13) with four screw-assembled washers (20).
2. Latch fastener (7) on backrest frame (29).

g. Companion Seat Cushion Installation

1. Install cushion (18) on cushion frame (21) with pin (28), washer (27), and new cotter pin (25).
2. Install link (15) on cushion (18) with screw (4) and new locknut (17).

h. Companion Seat Backrest Installation

Install backrest (1) into backrest frame (29).

11-31. COMPANION SEAT MAINTENANCE (Contd)

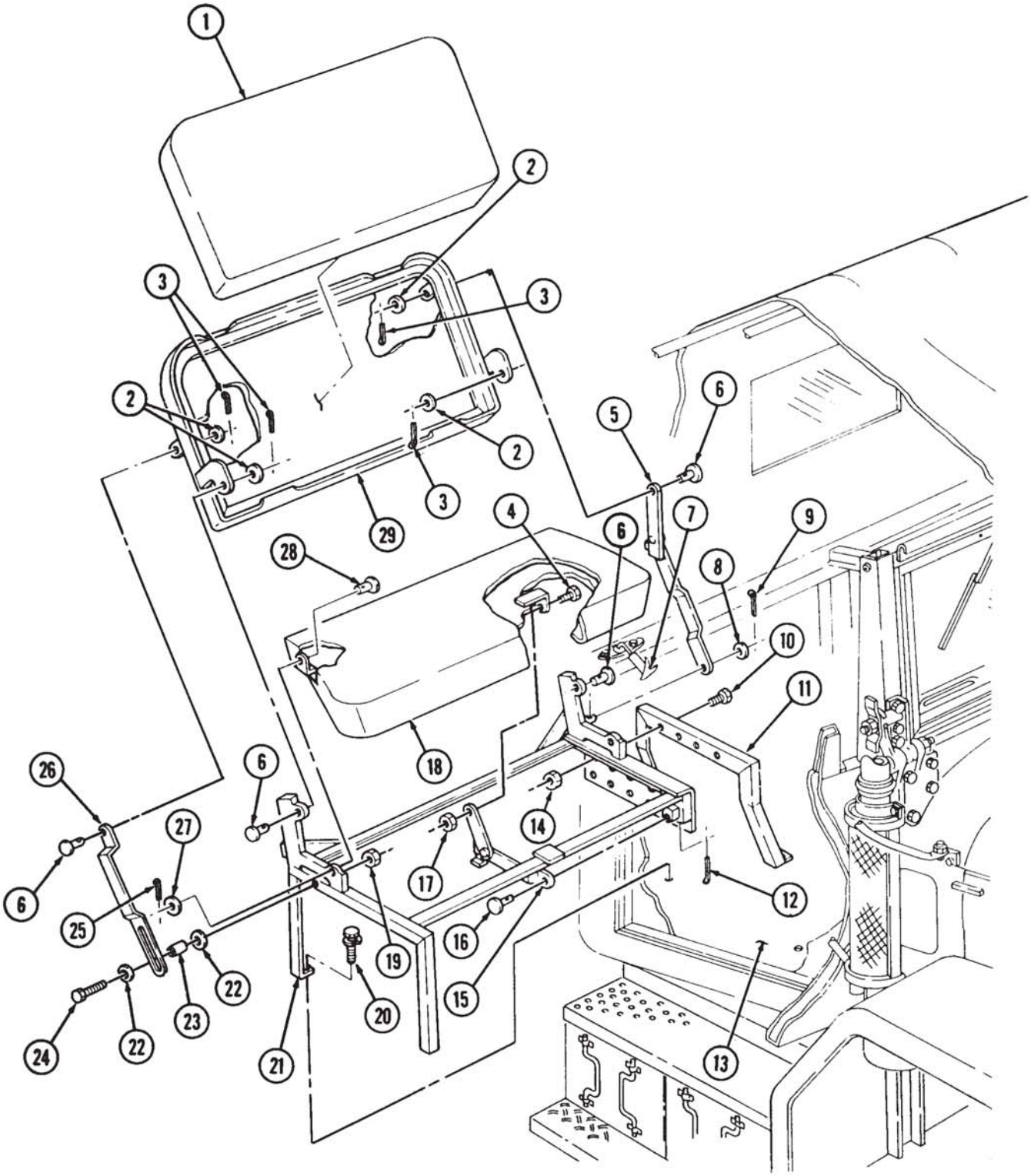

11-32. DRIVER'S SEAT REPLACEMENT

THIS TASK COVERS:

a. Removal **b. Installation**

INITIAL SETUP

APPLICABLE MODELS
All

MATERIALS/PARTS
Four screw-assembled lockwashers

REFERENCES (TM)
TM 9-2320-260-10
TM 9-2320-260-20P

EQUIPMENT CONDITION
Parking brake set (TM 9-2320-260-10).

a. Removal

Remove four screw-assembled lockwashers (1) and driver's seat with base (2) from cab floor (3). Discard screw-assembled lockwashers (1).

Install driver's seat with base (2) on cab floor (3) with four screw-assembled lockwashers (1).

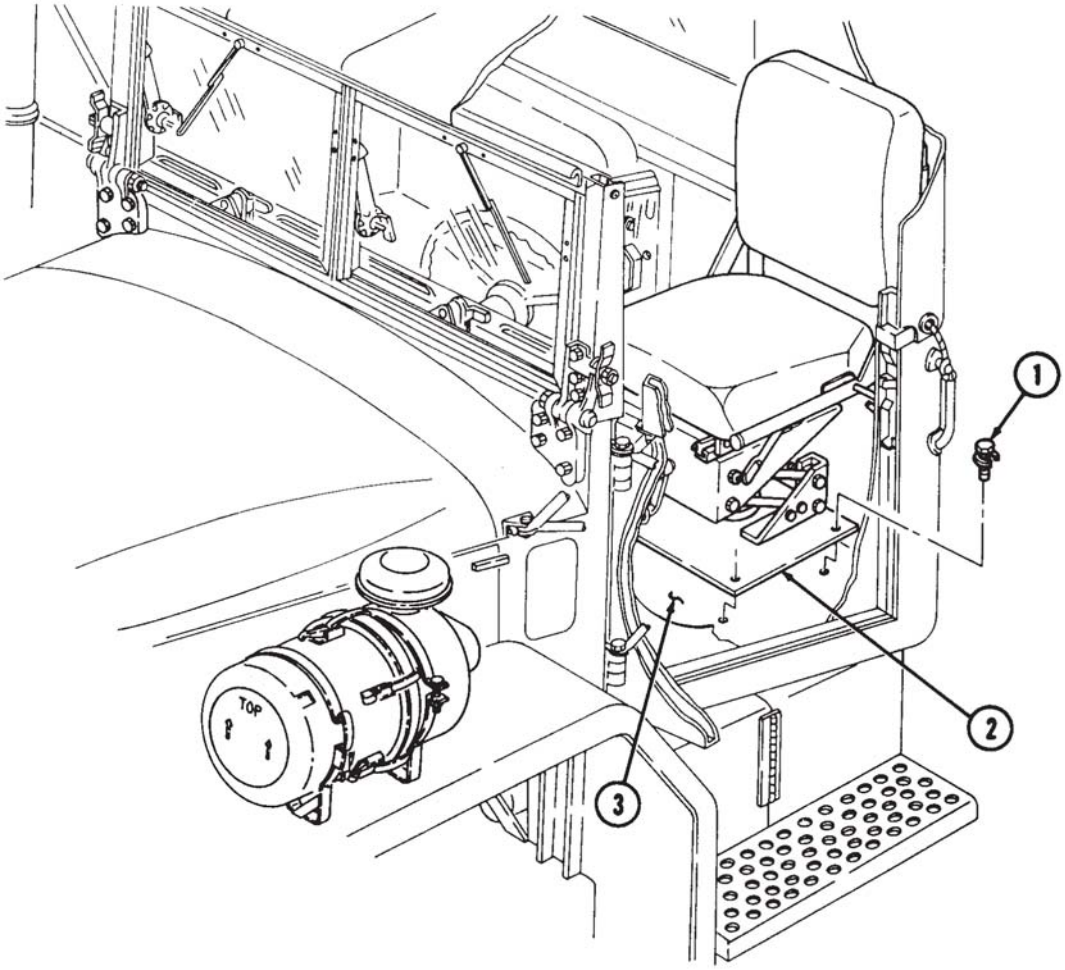

11-33. GLOVE COMPARTMENT REPLACEMENT

THIS TASK COVERS:

a. Removal **b. Installation**

INITIAL SETUP

APPLICABLE MODELS
All

MATERIALS/PARTS
Seal
Adhesive (Appendix C, Item 2)

REFERENCES (TM)
TM 9-2320-260-10
TM 9-2320-260-20P

EQUIPMENT CONDITION
Parking brake set (TM 9-2320-260-10).

a. Removal

1. Remove two screws (2) and bracket (3) from instrument panel (4).
2. Remove ten screws (9) and glove compartment (1) horn instrument panel (4).
3. Remove four nuts (6), screws (7), and glove compartment door (6) from instrument panel (4).
4. Inspect glove compartment door seal (8). If d-aged, remove seal (8) and clean debris from mounting surface of seal (8).

b. Installation

NOTE

Perform steps 1 and 2 only if seal was removed.

1. Apply adhesive to mounting surfaces of glove compartment door (6) and seal (8).
2. Install seal (8) on glove compartment door (6).
3. Install bracket (3) on instrument panel (4) with two screws (2).
4. Install glove compartment dwr (6) on instrument panel (4) with four screws (7) and nuts (5).
5. Install glove compartment (1) on instrument panel (4) with ten screws (9).

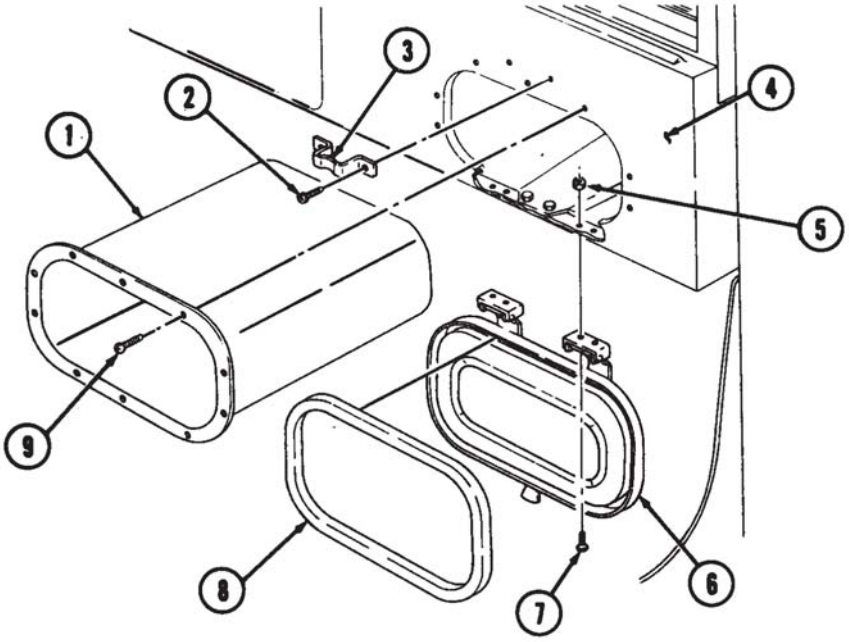

11-34. DRIVER'S SEAT CUSHION, BACKREST, FRAME, AND SEAT ADJUSTER REPLACEMENT

THIS TASK COVERS:

a. Cushion Removal
b. Backrest Removal
c. Frame Removal
d. Adjuster Removal
e. Adjuster Installation
f. Frame Installation
g. Backrest Installation
h. Cushion Installation

INITIAL SETUP

APPLICABLE MODELS
All

MATERIALS/PARTS
Eight locknuts
Six lockwashers

REFERENCES (TM)
TM 9-2320-260-10
TM 9-2320-260-20P

EQUIPMENT CONDITION
Parking brake set (TM 9-2320-260-10).

a. Cushion Removal

Remove four screws (14), lockwashers (15), two seat cushion brackets (16), and washers (13) from seat cushion (17) and seat frame (3). Remove seat cushion (17) from seat frame (3). Discard lockwashers (15).

b. Backrest Removal

1. Remove two screws (6), lockwashers (5), and clips (4) from seat backrest (1) and seat frame (3). Discard lockwashers (5).
2. Remove four screws (7), backrest (l), and plate (2) from seat frame (3).

c. Frame Removal

Remove four locknuts (8) and seat frame (3) from seat adjusters (11). Discard locknuts (8).

d. Adjuster Removal

Remove four locknuts (10), two seat adjusters (11), and release wire (12) from seat base (9). Discard locknuts (10).

e. Adjuster Installation

Install two seat adjusters (11) and release wire (12) on seat base (9) with four new locknuts (10).

f. Frame Installation

Install seat frame (3) on seat adjusters (11) with four new locknuts (8).

g. Backrest Installation

1. Install plate (2) and backrest (1) on seat frame (3) with four screws (7).
2. Install two clips (4), two new lockwashers (5), and screws (6) on seat frame (3) and seat backrest (1).

h. Cushion Installation

Install two seat cushion brackets (16), two washers (13), and seat cushion (17) on seat frame (3) with four screws (14) and new lockwashers (15).

11-34. DRIVER'S SEAT CUSHION, BACKREST, FRAME, AND SEAT ADJUSTER REPLACEMENT (Contd)

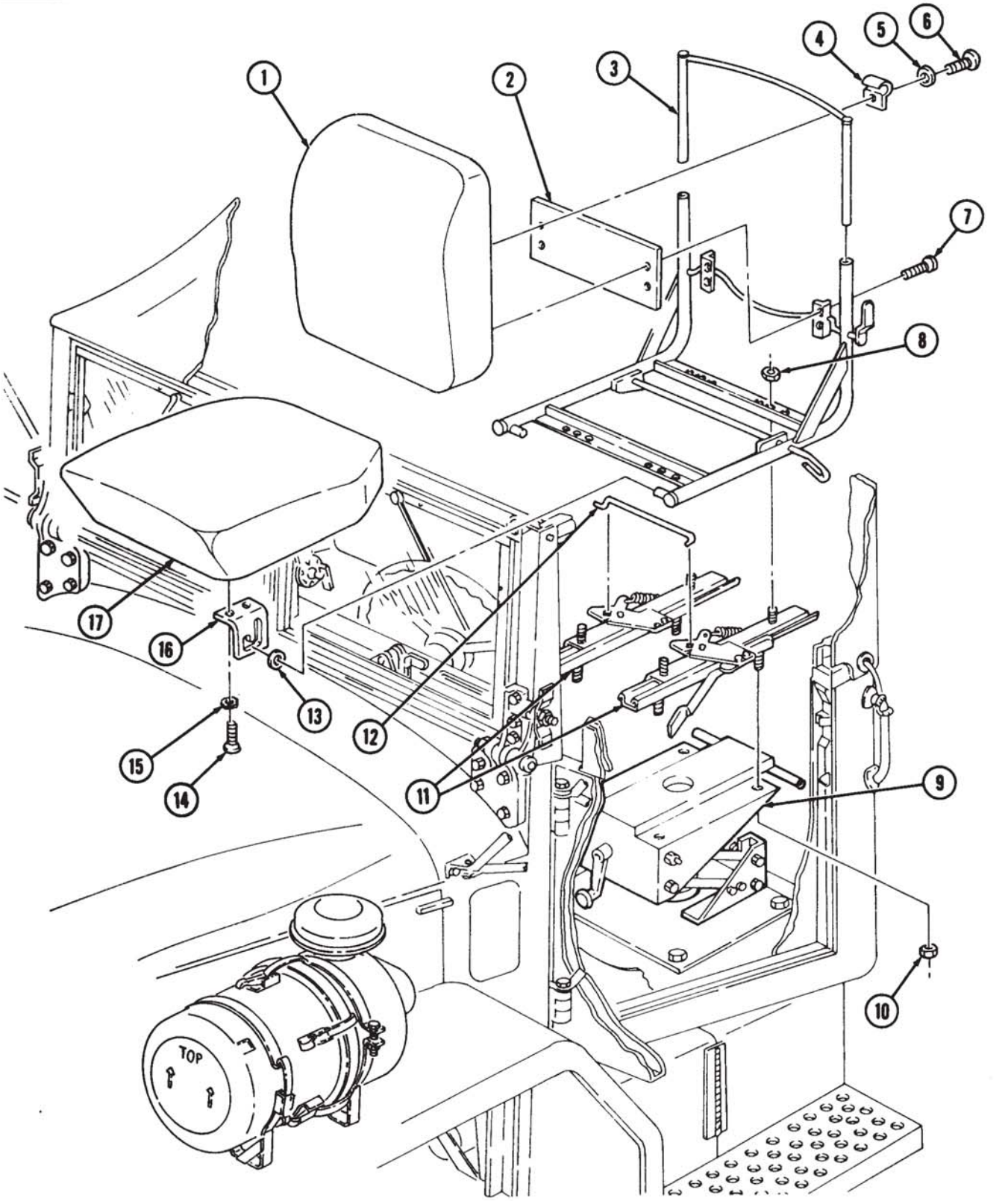

11-35. CAB SOFT TOP TURNBUTTONS AND LASHING HOOKS REPLACEMENT

THIS TASK COVERS:

a. Turnbutton and Snap Shank Removal
b. Lashing Hook Removal
c. Lashing Hook Installation
d. Turnbutton and Snap Shank Installation

INITIAL SETUP

APPLICABLE MODELS
All

MATERIALS/PARTS
Two locknuts

REFERENCES (TM)
TM 9-2320-260-10
TM 9-2320-260-20P

EQUIPMENT CONDITION
Parking brake set (TM 9-2320-260-10).

a. Turnbutton and Snap Shank Removal

1. Remove cab soft top (1) and turnbutton (4) from cab (3).
2. Remove snap shank (2) from cab (3).

b. Lashing Hook Removal

1. Remove rope (8) from lashing hook (5).
2. Remove two locknuts (7), screws (6), and lashing hook (5) from cab (3). Discard locknuts (7).

c. Lashing Hook Installation

1. Install lashing hook (5) on cab (3) with two screws (6) and new locknuts (7).
2. Install rope (8) on lashing hook (5).

d. Turnbutton and Snap Shank Installation

1. Install snap shank (2) on cab (3).
2. Install turnbutton (4) and cab soft top (1) on cab (3).

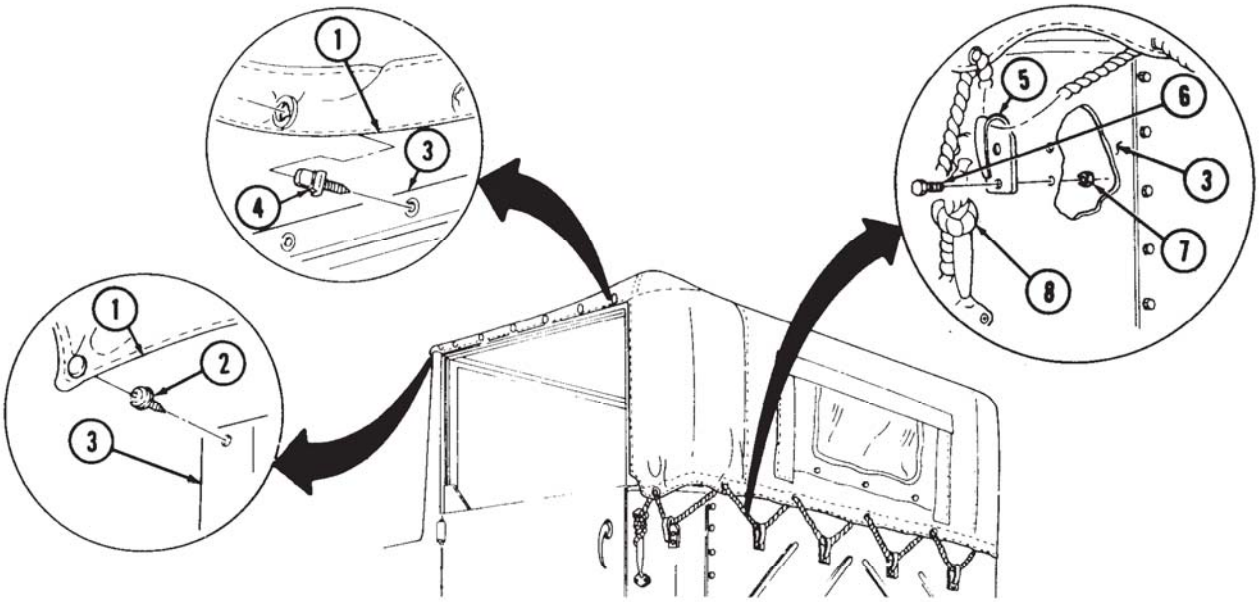

Section II. ACCESSORY ITEMS MAINTENANCE

11-36. ACCESSORY ITEMS MAINTENANCE INDEX

PARA. NO.	TITLE	PAGE NO.
11-37.	Windshield Wiper Blade, Arm, and Motor Replacement	11-68
11-38.	Reflector Replacement	11-69
11-39.	Windshield Washer Jet, Tubing, and Pump Replacement	11-70
11-40.	Windshield Wiper Motor Air Tubes Replacement	11-72
11-41.	Windshield Washer Reservoir Replacement	11-74
11-42.	Gondola Windshield Wiper Blade, Arm, and Motor Replacement	11-75
11-43.	Rearview Mirror, Brackets, and Arm Replacement	11-76
11-44.	Data Plate Replacement	11-78

11-37. WINDSHIELD WIPER BLADE, ARM, AND MOTOR REPLACEMENT

THIS TASK COVERS:

a. Removal **b. Installation**

INITIAL SETUP

APPLICABLE MODELS
All

REFERENCES (TM)
TM 9-2320-260-10
TM 9-2320-260-20P

EQUIPMENT CONDITION
Parking brake set (TM 9-2320-260-10).

a. Removal

1. Remove capnut (2) and arm (3) from motor (5).
2. Remove blade (4) from arm (3).
3. Compress clamp (6) and remove hose (7) and clamp (6) from motor (5).
4. Remove two screws (1) and motor (5) from windshield inner frame (8).

b. Installation

1. Install motor (5) on windshields inner frame (8) with two screws (1).
2. Compress clamp (6) and install hose (7) and clamp (6) on motor (5).
3. Install blade (4) on arm (3).
4. Install arm (3) on motor (5) with capnut (2).

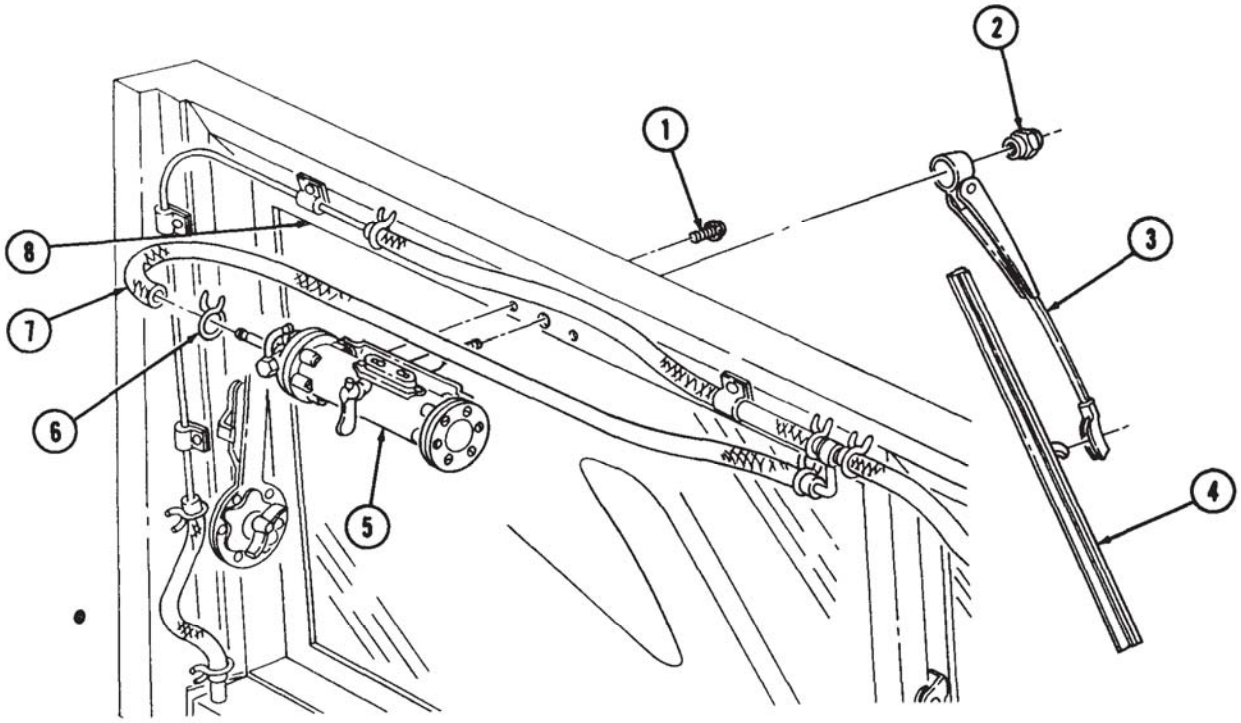

11-38. REFLECTOR REPLACEMENT

THIS TASK COVERS:

a. Removal **b. Installation**

INITIAL SETUP

APPLICABLE MODELS
All

REFERENCES (TM)
TM 9-2320-260-10
TM 9-2320-260-20P

EQUIPMENT CONDITION
Parking brake set (TM 9-2320-260-10).

NOTE

Reflectors are replaced basically the same way. This procedure covers reflector replacement on the forward cargo dropside vehicle only.

a. Removal

Remove two screws (1) and yellow reflector (2) from forward cargo body (3).

b. Installation

Install yellow reflector (2) on forward cargo body (3) with two screws (1).

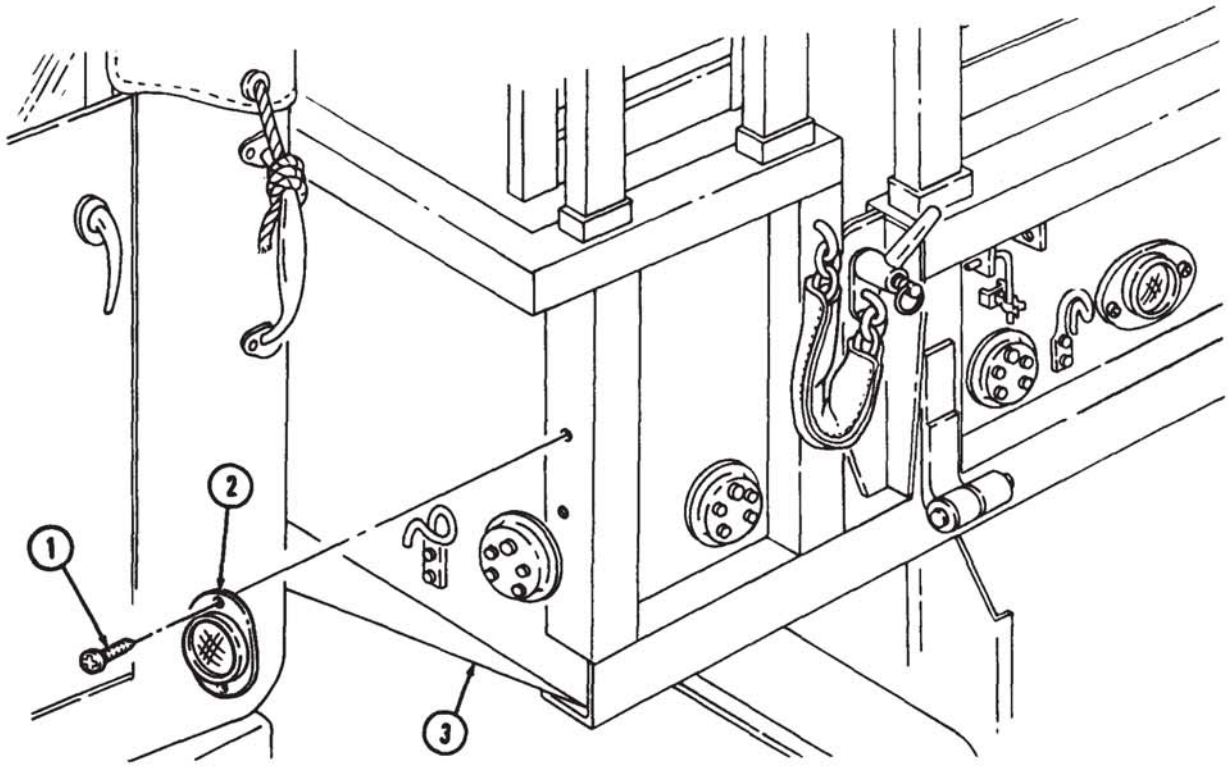

11-39. WINDSHIELD WASHER JET, TUBING, AND PUMP REPLACEMENT

THIS TASK COVERS:

a. Jet Removal
b. Tubing Removal
c. Pump Removal
d. Pump Installation
e. Tubing Installation
f. Jet Installation

INITIAL SETUP

APPLICABLE MODELS
All

MATERIALS/PARTS
Locknut

REFERENCES (TM)
TM 9-2320-260-10
TM 9-2320-260-20P

EQUIPMENT CONDITION
- Parking brake set (TM 9-2320-260-10).
- Hood raised and secured (TM 9-2320-260-10).

a. Jet Removal

Remove nut (4), rubber washer (3), and jet (2) from cowling (6).

b. Tubing Removal

NOTE

Tag all tubing for installation.

1. Remove cover (17), grommet (18), tubing (10), and strainer (16) from reservoir (15).
2. Remove strainer (16) from tubing (10). Remove tubing (10) from grommet (18) and cover (17).
3. Remove strap (20) from tubing (7) and speedometer cable (5).
4. Remove tubing (19), (7), and (10) from tee (8).
5. Remove tubing (1), (7), and (21) from valve (22).
6. Remove tubing (1) and (19) from pump (12).
7. Remove tubing (10) from grommet (14). Remove grommet (14) from dash panel (23).

c. Pump Removal

Remove locknut (9), screw (13), and pump (12) from instrument panel (11). Discard locknut (9).

d. Pump Installation

Install pump (12) on instrument panel (11) with screw (13) and new locknut (9).

e. Tubing Installation

1. Install grommet (14) in dash panel (23) and install tubing (10) through grommet (14).
2. Install tubing (1) and (19) on pump (12).
3. Install tubing (1), (7), and (21) on valve (22).
4. Install tubing (19), (7), and (10) on tee (8).
5. Install tubing (7) on speedometer cable (5) with strap (20).
6. Install tubing (10) through grommet (18) and cover (17).
7. Install strainer (16) on tubing (10).
8. Install cover (17), grommet (18), tubing (10), and strainer (16) on reservoir (15).

11-39. WINDSHIELD WASHER JET, TUBING, AND PUMP REPLACEMENT (Contd)

f. Jet Installation

Install jet (2) and rubber washer (3) on cowling (6) with nut (4).

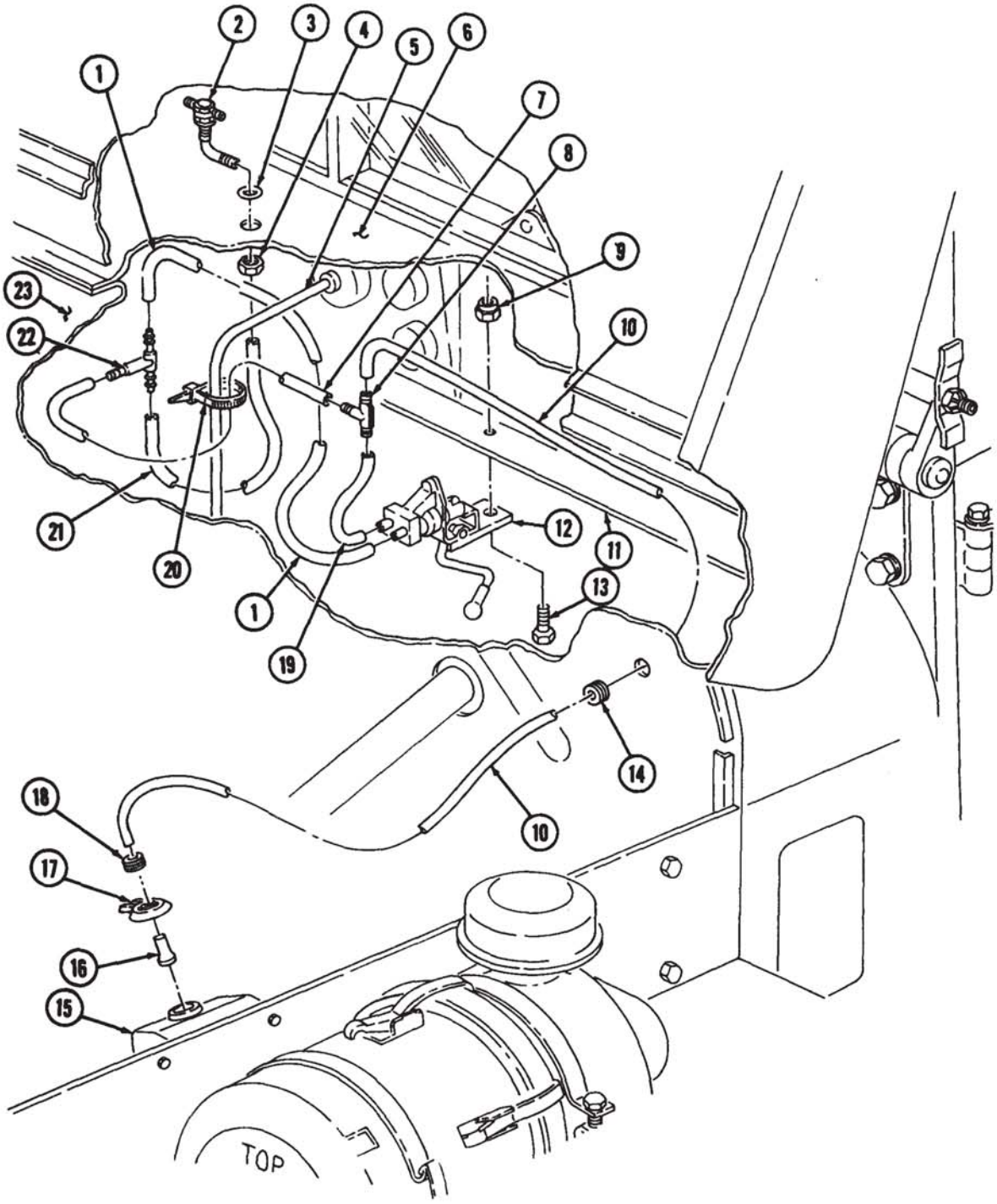

11-40. WINDSHIELD WIPER MOTOR AIR TUBES REPLACEMENT

THIS TASK COVERS:

a. Removal

b. Installation

INITIAL SETUP

APPLICABLE MODELS
All

MATERIALS/PARTS
Antiseize compound (Appendix C, Item 5)

REFERENCES (TM)
TM 9-2320-260-10
TM 9-2320-260-20P

EQUIPMENT CONDITION
- Parking brake set (TM 9-2320-260-10).
- Drain air reservoirs (TM 9-2320-260-10).

GENERAL SAFETY INSTRUCTIONS
Do not disconnect air lines before draining air reservoirs.

a. Removal

1. Remove four screws (9) and clamps (2) from tube (1), hose (10), and windshield inner frame (6).
2. Remove two clamps (25) and hose (26) from tube (1) and fitting (24).
3. Remove two clamps (3), tube (1), and hose (4) from tee (13).
4. Remove two clamps (11) and hose (12) from tee (13) and motor (5)
5. Remove two clamps (7) and hose (10) from motor (8) and tee (13).

WARNING

Do not disconnect air lines before draining air reservoirs. Small parts under pressure may shoot out with high velocity, causing injury to personnel.

NOTE

Tag all air lines and hoses for installation.

6. Remove air line (15) and hose (22) from adapters (16) and (18).
7. Remove clamp (23) and hose (22) from fitting (24).
8. Loosen two setscrews (19) and remove knob (20) from wiper motor control valve (17).
9. Remove jamnut (21) and wiper motor control valve (17) from instrument panel (14).
10. Remove adapters (16) and (18) from wiper motor control valve (3).

b. Installation

1. Apply antiseize compound to male threads of adapters (16) and (18), air line (15), and hose (22).
2. Install adapters (16) and (18) on wiper motor control valve (17)
3. Install wiper motor control valve (17) on instrument panel (14) with jamnut (21).
4. Install knob (20) on wiper motor control valve (17) and tighten two setscrews (19).
5. Install air line (15) and hose (22) on adapters (16) and (18).
6. Install hose (22) on fitting (24) with clamp (23).
7. Install hose (10) on motor (8) and tee (13) with two clamps (7)
8. Install hose (12) on motor (5) and tee (13) with two clamps (11).
9. Install hose (4) on tube (1) and tee (13) with two clamps (3).
10. Install hose (26) on tube (1) and fitting (24) with two clamps (25).
11. Install tube (1) and hose (10) on windshield inner frame (6) with four clamps (2) and screws (9).

11-40. WINDSHIELD WIPER MOTOR AIR TUBES REPLACEMENT (Contd)

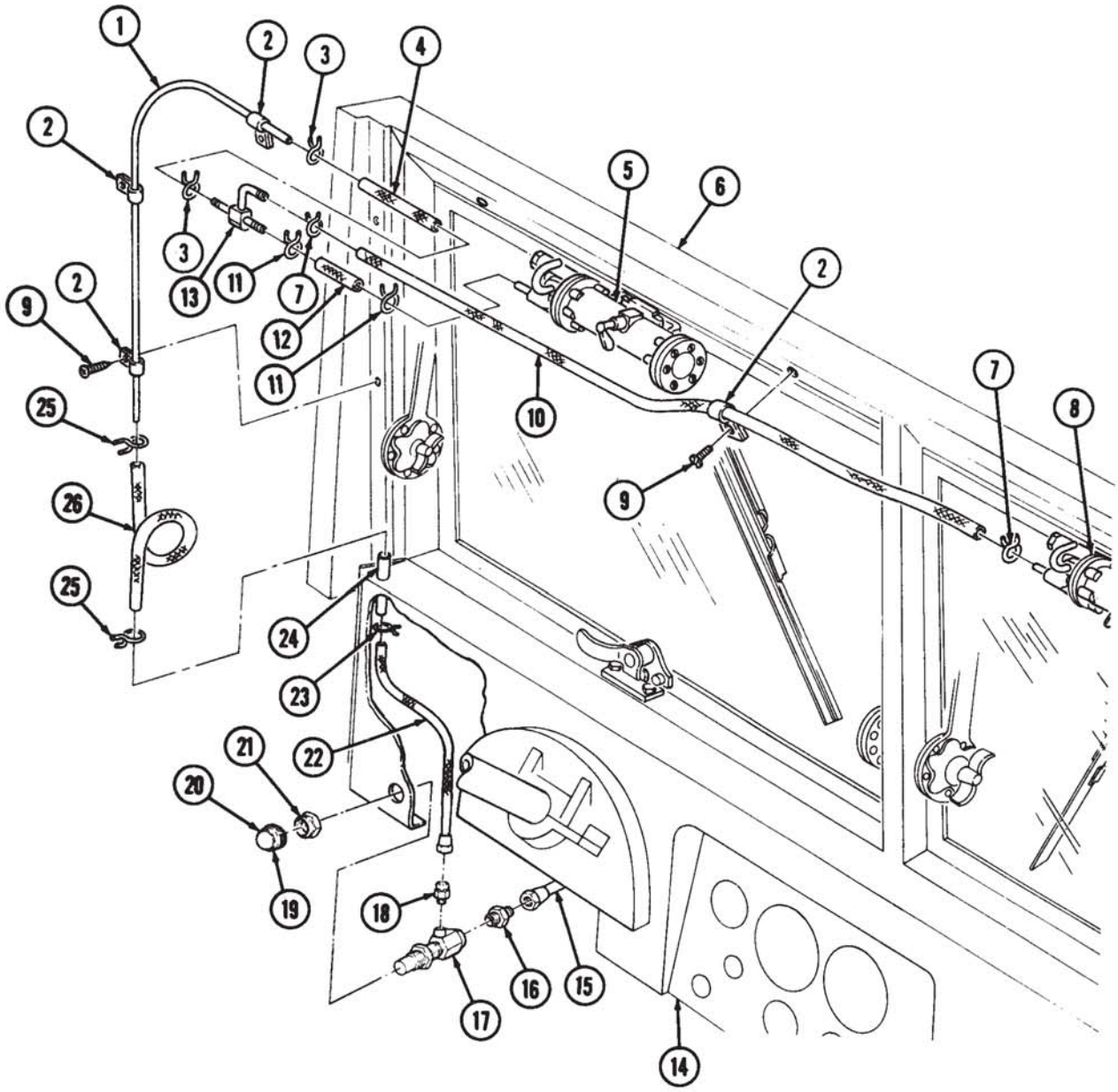

FOLLOW-ON TASK: Start engine (TM 9-2320-361-10), build up air pressure, and check operation of windshield wiper motor.

11-41. WINDSHIELD WASHER RESERVOIR REPLACEMENT

THIS TASK COVERS:

a. Removal **b. Installation**

INITIAL SETUP

APPLICABLE MODELS
All

MATERIALS/PARTS
Two locknuts

REFERENCES (TM)
TM 9-2320-260-10
TM 9-2320-260-20P

EQUIPMENT CONDITION
- Parking brake set (TM 9-2320-260-10).
- Hood raised and secured (TM 9-2320-260-10).

a. Removal

1. Remove cover (2), grommet (4), tubing (3), and strainer (5) from reservoir (6).
2. Remove strainer (5) from tubing (3). Remove tubing (3) from grommet (4) and cover (2).
3. Remove two screws (7), washers (9), locknuts (1), and reservoir (6) from side panel (8). Discard locknuts (1).

b. Installation

1. Install reservoir (6) on side panel (8) with two screws (7), washers (9), and new locknuts (1).
2. Install tubing (3) through grommet (4) and cover (2).
3. Install strainer (5) on tubing (3).
4. Install strainer (5), tubing (3), grommet (4), and cover (2) on reservoir (6).

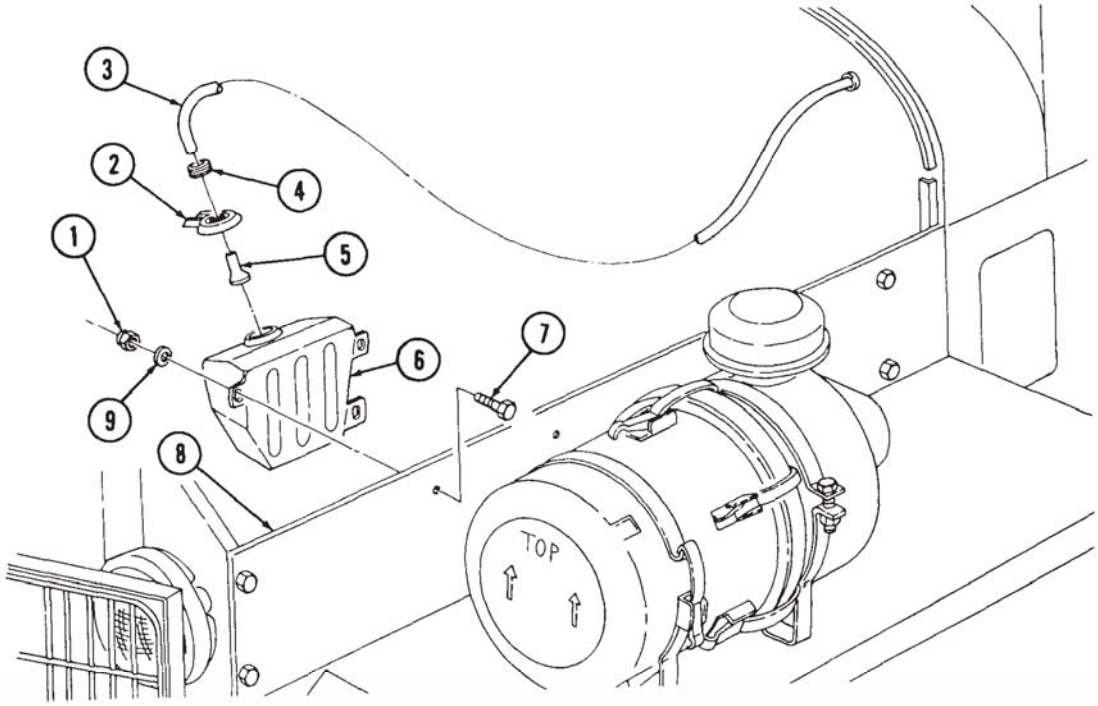

11-42. GONDOLA WINDSHIELD WIPER BLADE, ARM, AND MOTOR REPLACEMENT

THIS TASK COVERS:

a. Removal **b. Installation**

INITIAL SETUP

APPLICABLE MODELS
M819

MATERIALS/PARTS
Lockwasher

REFERENCES (TM)
TM 9-2320-260-10
TM 9-2320-260-20P

EQUIPMENT CONDITION
Parking brake set (TM 9-2320-260-10).

a. Removal

1. Remove screw (3) and wire (2) from windshield wiper motor (1).
2. Remove screw (7) and wiper arm (6) from shaft (14).
3. Remove slotted nut (8) and adapter (9) from shaft (14).
4. Remove nuts (4) and (5), lockwasher (10), washer (11), and seal (12) from shaft (14). Discard lockwasher (10).
5. Remove windshield wiper motor (1) from front panel (13).

b. Installation

1. Position windshield wiper motor (1) on front panel (13) and install with seal (12), washer (11), new lockwasher (10), and nuts (4) and (5).
2. Install adapter (9) and slotted nut (8) on shaft (14).
3. Install wiper arm (6) on shaft (14) with screw (7).
4. Connect wire (2) to windshield wiper motor (1) with screw (3).

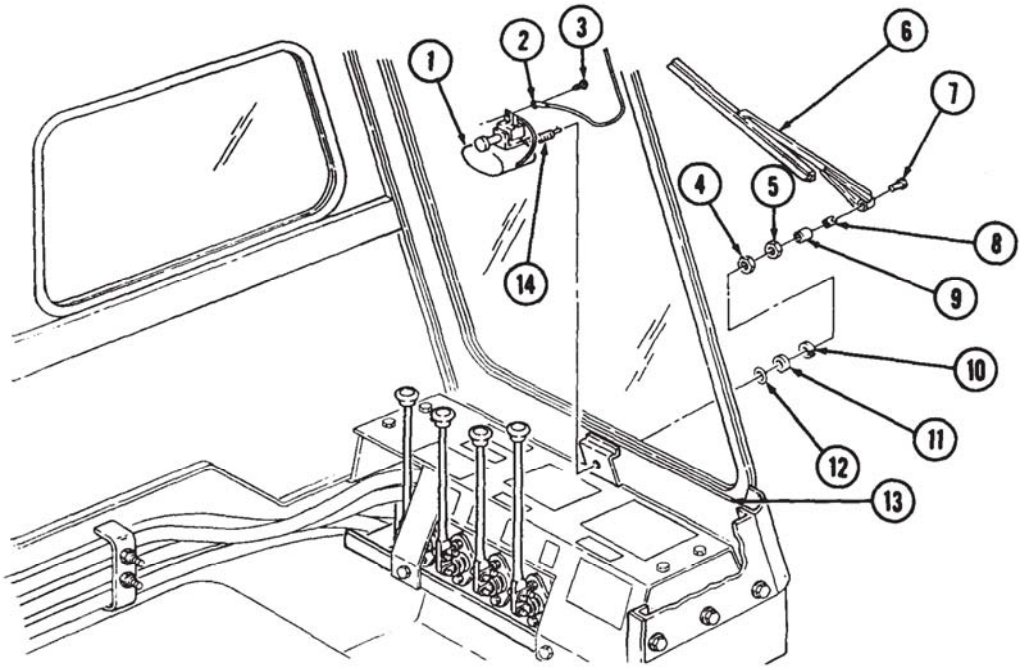

11-43. REARVIEW MIRROR, BRACKETS, AND ARM REPLACEMENT

THIS TASK COVERS:

a. Removal **b. Installation**

INITIAL SETUP

APPLICABLE MODEM
All

MATERIALS/PARTS
Lockwasher
Ten locknuts
Screw-assembled lockwasher

REFERENCES (TM)
TM 9-2320-260-10
TM 9-2320-260-20P

EQUIPMENT CONDITION
Parking brake set (TM 9-2320-260-10).

a. Removal

1. Remove screw-assembled lockwasher (26), convex mimer (17), locknut (16), lockwasher (15), screw (25), and two clamps (23) from brace (24). Discard screw-assembled lockwasher (26), lockwasher (15), and locknut (16).
2. Remove two locknuts (18), washers (19), spacers (20), and mirror (21) from brace (22). Discard locknuts (18).
3. Remove two locknuts (10), washers (11) and (14), rod (30), and braces (22) and (24) from braces (12), (13), (27), (28), and (29). Discard locknuts (10).
4. Remove screw (8), washer (6), locknut (7), and braces (12) and (28) from clip (4). Discard locknut (7).

NOTE

Assistant will help with step 5.

5. Remove two screws (32), locknuts (l), plate (2), and clip (4) from cowling (3). Discard locknuts (1).
6. Remove locknut (7), washer (6), hinge bolt (9), and brace (29) from lower door hinge (31). Discard locknut (7).
7. Install hinge bolt (9) in lower door hinge (31).
8. Remove locknut (7), washer (6), hinge bolt (9), and braces (13) and (27) from upper door hinge (5). Discard locknut (7).
9. Install hinge bolt (9) in upper door hinge (5).

b. Installation

1. Install braces (13) and (27) on upper door hinge (5) with hinge bolt (9), washer (6), and new locknut (7).
2. Install brace (29) on lower door hinge (31) with hinge bolt (9), washer (6), and new locknut (7).

NOTE

Assistant will help with step 3.

3. Install clip (4) and plate (2) on cowling (3) with two screws (32) and new locknuts (1).
4. Install braces (28) and (12) on clip (4) with screw (8), washer (6), and new locknut (7).

11-43. REARVIEW MIRROR, BRACKETS, AND ARM REPLACEMENT (Contd)

5. Install rod (30) and braces (22) and (24) on braces (12), (13), (27), (28), and (29) with two washers (14), washers (11), and new locknuts (10).
6. Install two spacers (20) on mirror (21) and install mirror (21) on brace (22) with two washers (19) and new locknuts (18).
7. Install convex mirror (17) and two clamps (23) on brace (24) with new screw-assembled washer (26), screw (25), new lockwasher (15), and new locknut (16).

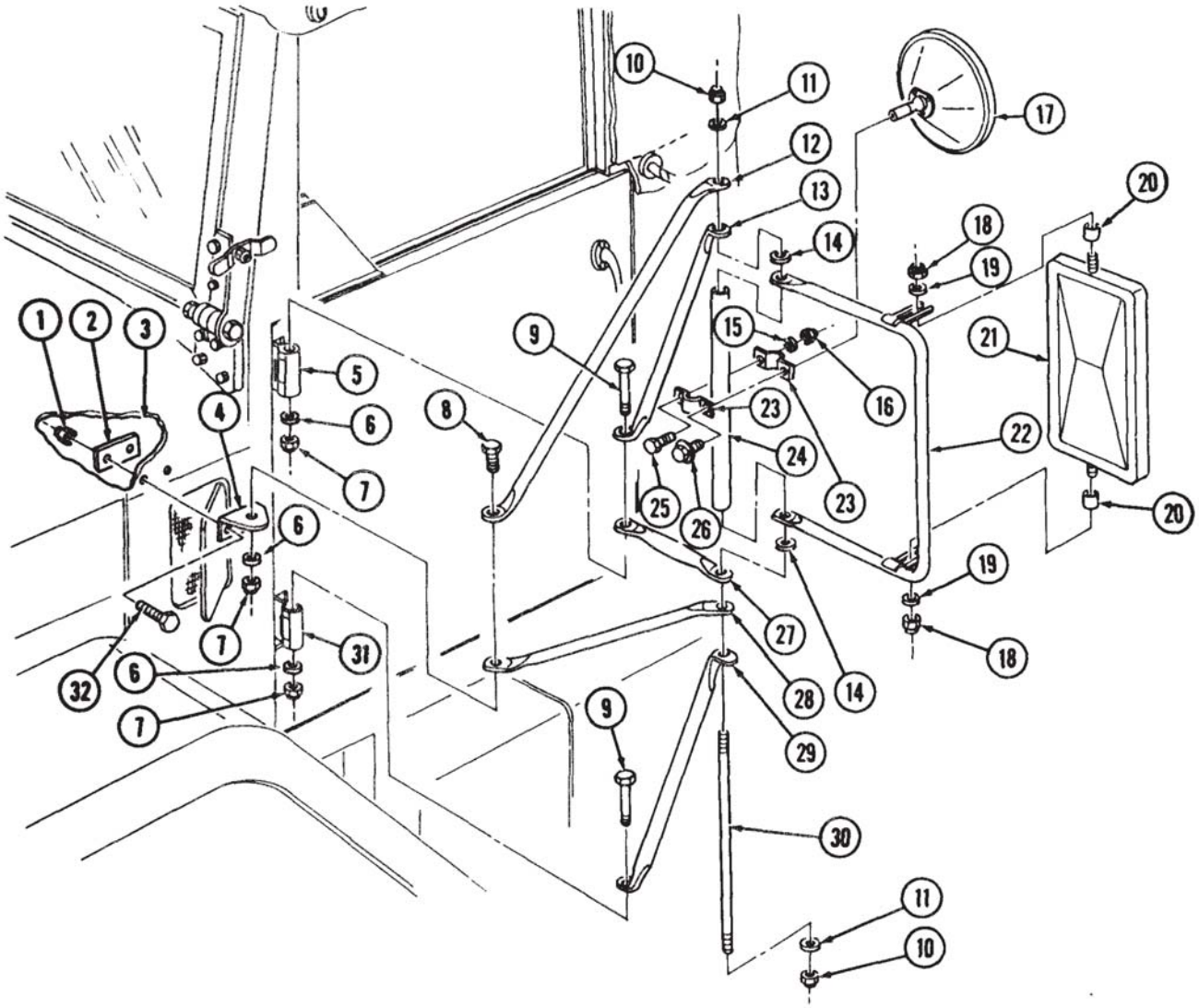

11-44. DATA PIATE REPLACEMENT

THIS TASK COVERS:

a. Removal **b. Installation**

INITIAL SETUP

APPLICABLE MODELS
All

MATERIAIS/PARTS
Four drivescrews

REFERENCES (TM)
TM 9-2320-260-10
TM 9-2320-260-20P

EQUIPMENT CONDITION
Parking brake set (TM 9-2320-260-10).

a. Removal

NOTE

Data plates are installed with rivets, screws, drivescrews, or adhesive. This procedure covers a data plate installed with drivescrews.

Remove four drivescrews (3) and data plate (2) from support (1). Discard drivescrews (3).

b. Installation

Install data plate (2) on support (1) with four new drivescrews (3).

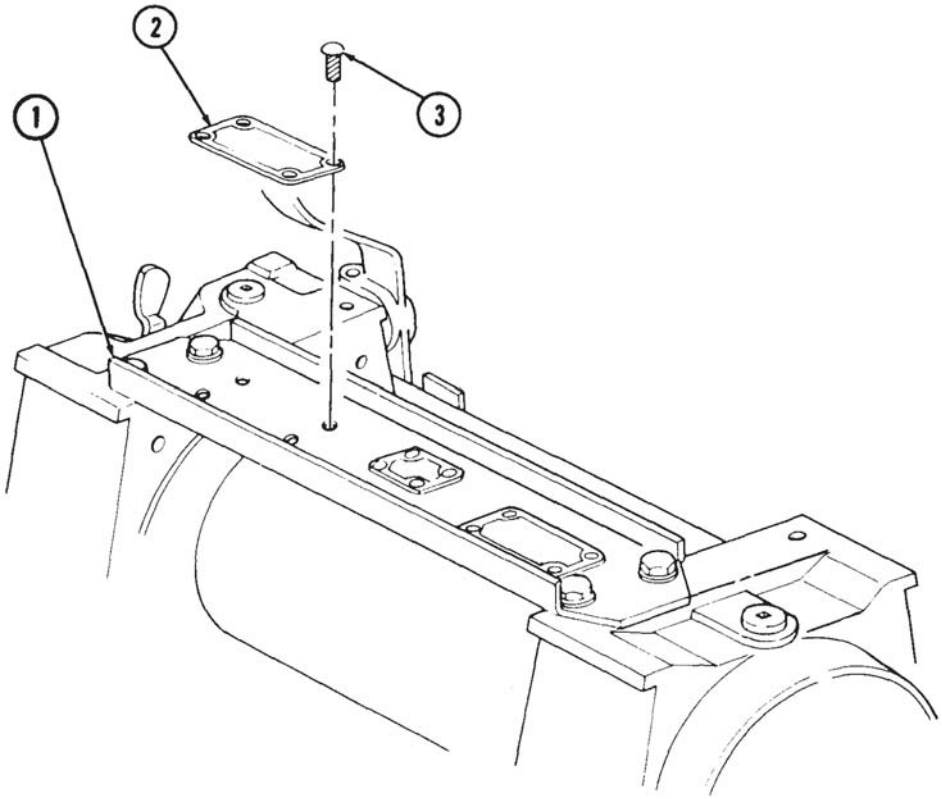

CHAPTER 12
SPECIAL PURPOSE BODIES MAINTENANCE

Section I. Cargo Body Maintenance (page 12-1)
Section II. Dump Body Maintenance (page 12-21)
Section III. Van Body Maintenance (page 12-34)
Section IV. Wrecker Body Maintenance (page 12-101)
Section V. Tractor Wrecker Body Maintenance (page 12-116)
Section VI. Bolster Body Maintenance (page 12-122)
Section VII. Tractor Body Maintenance (page 12-130)

Section I. CARGO BODY MAINTENANCE

12-1. CARGO BODY MAINTENANCE INDEX

PARA. NO.	TITLE	PAGE NO.
12-2.	Cargo Side Rack and Troop Seat Maintenance	12-2
12-3.	Cargo Front Rack Maintenance	12-6
12-4.	Cargo Gate Rack Maintenance	12-8
12-5.	Upper and Lower Splash Guard Replacement	12-10
12-6.	Cargo Tailgate Replacement (M813, M814)	12-12
12-7.	Cargo Tailgate Replacement (M813A1)	12-14
12-8.	Cargo Spare Tire Carrier Replacement (M814)	12-16
12-9.	Cargo Pioneer Tool Kit Bracket and Toolbox Replacement	12-18
12-10.	Cargo Spare Tire Carrier Replacement (M813, M813A1)	12-20

12-2. CARGO SIDE RACK AND TROOP SEAT MAINTENANCE

THIS TASK COVERS:

a. Troop Seat Removal
b. Cargo Rack Disassembly
c. Troop Seat Disassembly
d. Inspection
e. Troop Seat Assembly
f. Cargo Rack Assembly
g. Troop Seat Installation

INITIAL SETUP

APPLICABLE MODELS
M813, M813A1, M814

MATERIALS/PARTS
Five cotter pins
Seven locknuts

REFERENCES (TM)
TM 9-2320-260-10
TM 9-2320-260-20P

EQUIPMENT CONDITION
- Parking brake set (TM 9-2320-260-10).
- Side rack and troop seat removed (TM 9-2320-260-10).

NOTE

Left and right side rack and troop seats are maintained basically the same way for M813, M813A1, and M814 cargo trucks. This procedure covers the left side rack and troop seat for M813A1.

a. Troop Seat Removal

Remove five cotter pins (4), pins (3), and troop seat (2) from cargo rack (1). Discard cotter pins (4).

b. Cargo Rack Disassembly

1. Remove two locknuts (10), screws (9), four washers (8), and clamps (7) from cargo rack slat (5). Discard locknuts (10).
2. Remove sixteen nuts (12), screws (6), and five stakes (11) from two cargo rack slats (5),

c. Troop Seat Disassembly

1. Remove five locknuts (13), screws (15), and legs (14) from three channels (18) and two end channels (22). Discard locknuts (13).
2. Remove two nuts (25) and screws (16) from hinges (23) on end channels (22).
3. Remove four nuts (24), screws (21), two hinges (23), and end channels (22) from troop seat slats (17).
4. Remove twenty nuts (19), screws (20), three hinges (23), and five channels (18) from troop seat slats (17).

1. Inspect legs (14), channels (18), end channels (22), and hinges (23) for cracks, bends, and excessive rust. Replace legs (14), channels (18), end channels (22), or hinges (23) if damaged.
2. Inspect cargo rack and troop seat slats (5) and (17) for splinters, warping, and excessive rotting. Replace cargo rack and troop seat slats (5) and (17) if damaged.

12-2. CARGO SIDE RACK AND TROOP SEAT MAINTENANCE (Contd)

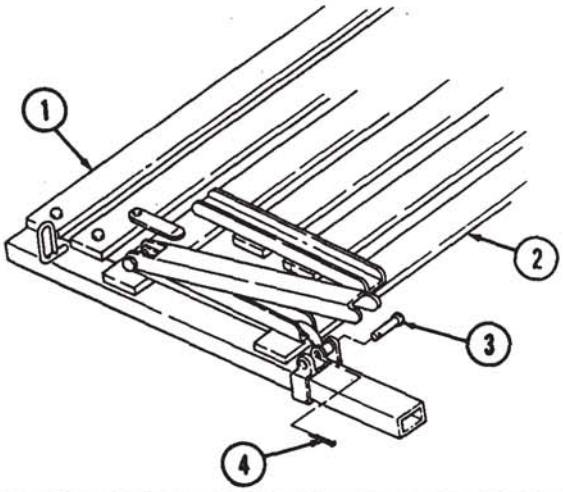

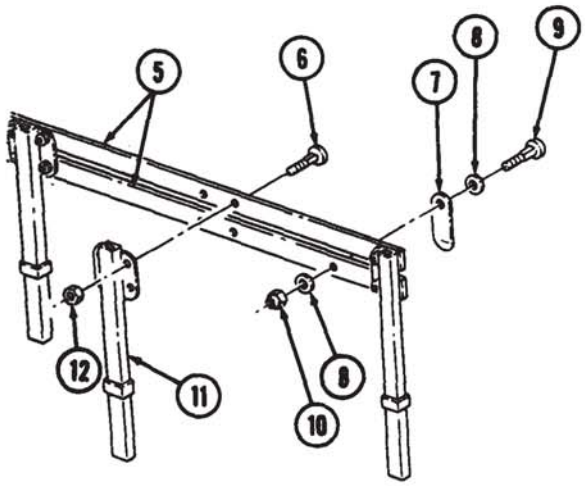

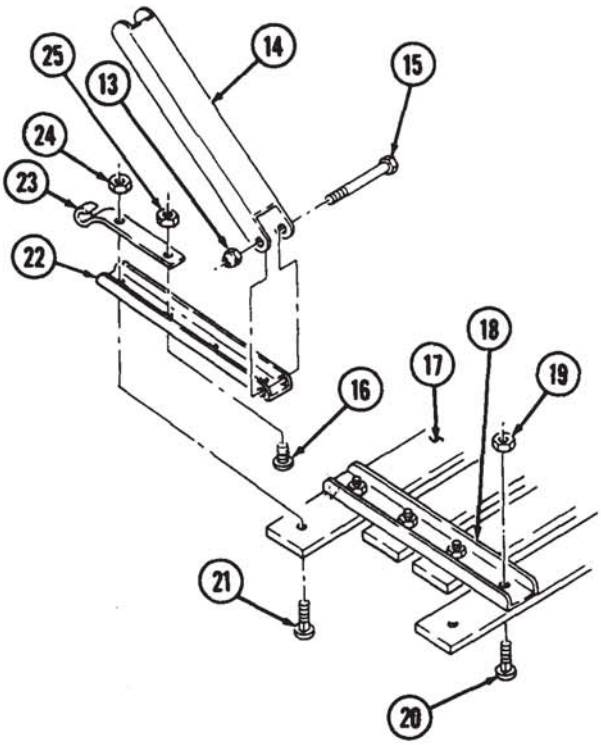

12-2. CARGO SIDE RACK AND TROOP SEAT MAINTENANCE (Contd)

e. Troop Seat Assembly

1. Install five channels (9) and three hinges (13) on troop seat slats (7) with twenty screws (10) and nuts (8).
2. Install two end channels (12) and hinges (13) on troop seat slats (7) with four screws (11) and nuts (1).
3. Install two screws (6) and nuts (2) on two end channels (12) and hinges (13).
4. Install five legs (3) on three channels (9) and two end channels (12) with five screws (4) and new

f. Cargo Rack Assembly

1. Install five stakes (20) on two cargo rack slats (14) with sixteen screws (15) and nuts (21).
2. Install two clamps (18) on cargo rack slat (14) with four washera (17), two screws (16), and new locknuts (19).

g. Troop Seat Installation

Install troop seat (23) on cargo rack (22) with five pins (24) and new cotter pins (25).

12-2. CARGO SIDE RACK AND TROOP SEAT MAINTENANCE (Contd)

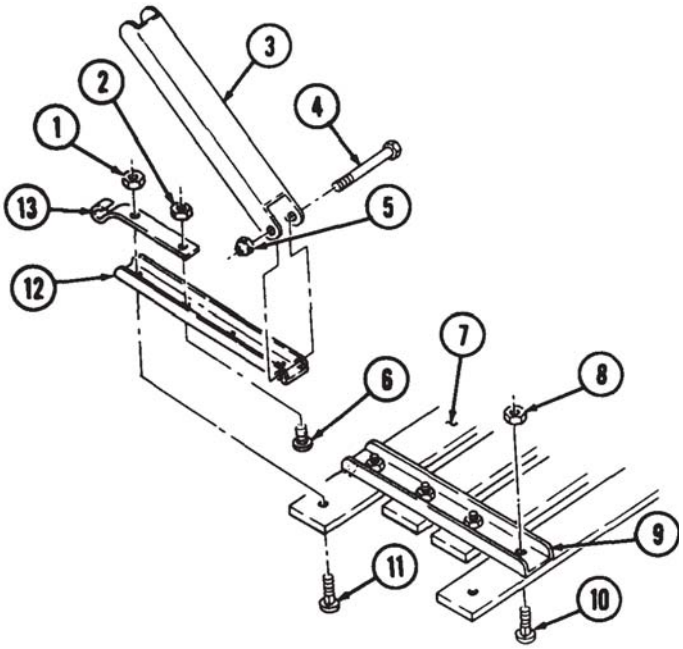

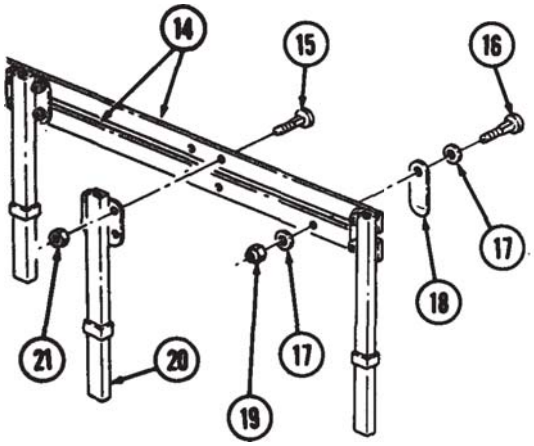

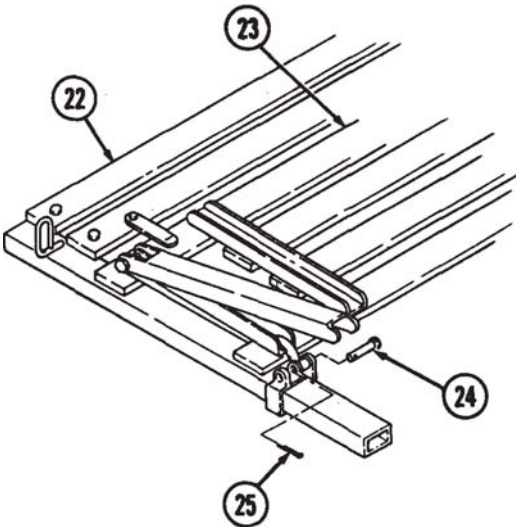

FOLLOW-ON TASK: Install troop seat and side rack (TM 9-2320-260-10).

12-3. CARGO FRONT RACK MAINTENANCE

THIS TASK COVERS:

a. Disassembly
b. Inspection
c. Assembly

INITIAL SETUP

APPLICABLE MODELS
M813A1, M814

REFERENCES (TM)
TM 9-2320-260-10
TM 9-2320-260-20P

EQUIPMENT CONDITION
- Parking brake set (TM 9-2320-260-10).
- Cargo front rack removed (TM 9-2320-260-10).

a. Disassembly

1. Remove eight nuts (6), screws (7), and two stakes (5) from four cargo rack slats (4).
2. Remove eight nuts (3), screws (1), and two end channels (2) from four cargo rack slats (4).

b. Inspection

1. Inspect stakes (5) and end channels (2) for cracks, bends, and excessive rust. Replace stakes (5) and end channels (2) if damaged.
2. Inspect cargo rack slats (4) for splinters, warp, and excessive rotting. Replace cargo rack slats (4) if damaged.

c. Assembly

1. Install two end channels (2) on four cargo rack slats (4) with eight screws (1) and nuts (3).
2. Install two stakes (5) on four cargo rack slats (4) with eight screws (7) and nuts (6).

12-3. CARGO FRONT RACK MAINTENANCE (Contd)

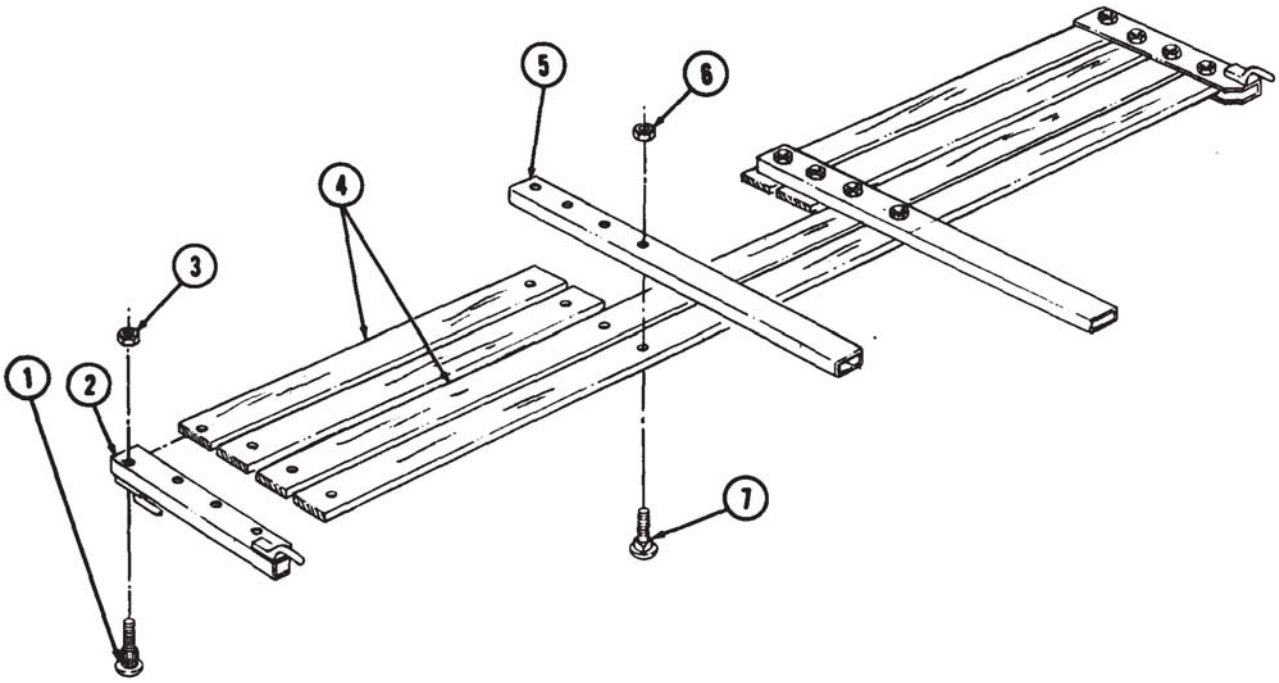

FOLLOW-ON TASK: Install cargo front rack (TM 9-2320-260-10).

12-4. CARGO GATE RACK MAINTENANCE

THIS TASK COVERS:

a. Disassembly
b. Inspection
c. Assembly

INITIAL SETUP

APPLICABLE MODELS
M813, M813A1

REFERENCES (TM)
TM 9-2320-260-10
TM 9-2320-260-20P

EQUIPMENT CONDITION
- Parking brake set (TM 9-2320-260-10),
- Cargo gate rack removed (TM 9-2320-260-10).

NOTE

All cargo gate racks are maintained basically the same way for M813 and M813A1 cargo trucks. This procedure covers the cargo gate rack for M813 cargo trucks.

a. Disassembly

1. Remove twelve nuts (1), screws (6), and two channels (7) from six cargo rack slats (2).
2. Remove two nuts (3), screws (5), and hinge (4) from cargo rack slat (2).

b. Inspection

1. Inspect channels (7) and hinge (4) for cracks, bends, and excessive rust. Replace channels (7) and hinge (4) if damaged.
2. Inspect cargo rack slats (2) for splinters, warp, and excessive rotting. Replace cargo rack slats (2) if damaged.

NOTE

Ensure slat with hinge holes is installed on bottom.

1. Install hinge (4) on cargo rack slat (2) with two screws (5) and nuts (3).
2. Install two channels (7) on six cargo rack slats (2) with twelve screws (6) and nuts (1).

12-4. CARGO GATE RACK MAINTENANCE (Contd)

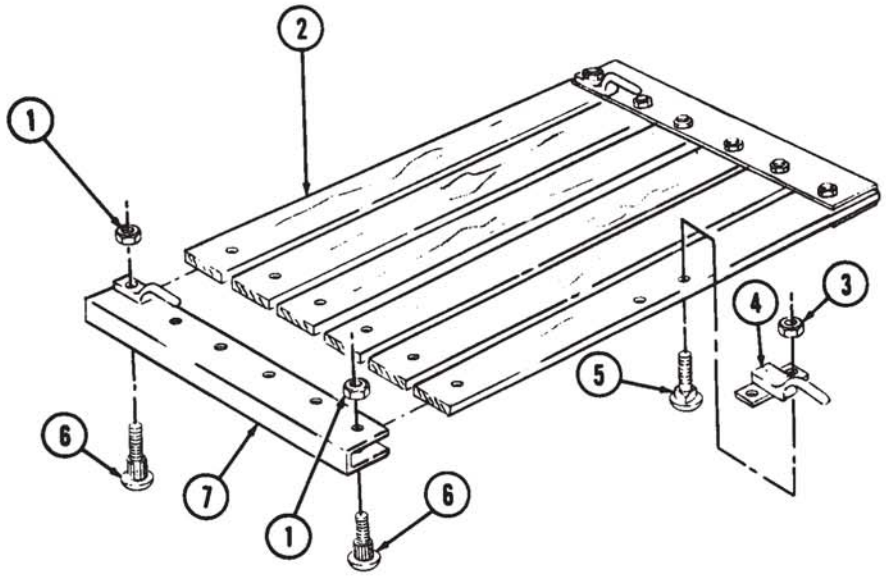

FOLLOW-ON TASK: Install cargo gate rack (TM 9-2320-260-10).

12-5. UPPER AND LOWER SPLASH GUARD REPLACEMENT

THIS TASK COVERS:

a. Lower Splash Guard Removal
b. Upper Splash Guard Removal
c. Upper Splash Guard Installation
d. Lower Splash Guard Installation

INITIAL SETUP

APPLICABLE MODELS
M813, M814

MATERIALS/PARTS
Ten locknuts

REFERENCES (TM)
TM 9-2320-260-10
TM 9-2320-260-20P

EQUIPMENT CONDITION
Parking brake set (TM 9-2320-260-10).

a. Lower Splash Guard Removal

1. Remove two locknuts (10), screws (11), and braces (6) from upper splash guard (13) and lower splash guard (8). Discard locknuts (10).
2. Remove three locknuts (12), screws (7), retainer strip (9), and lower splash guard (8) from upper splash guard (13). Discard locknuts (12).

b. Upper Splash Guard Removal

1. Remove two locknuts (5), screws (4), and braces (6) from frame (3). Discard locknuts (5).
2. Remove three locknuts (1), screws (14), and upper splash guard (13) from frame (2). Discard locknuts (1).

c. Upper Splash Guard Installation

1. Install upper splash guard (13) on frame (2) with three screws (14) and new locknuts (l).
2. Install two braces (6) on frame (3) with two screws (4) and new locknuts (5).

d. Lower Splash Guard Installation

1. Install lower splash guard (8) on upper splash guard (13) with retainer strip (9), three screws (7), and new locknuts (12).
2. Install two braces (6) on upper splash guard (13) and lower splash guard (8) with two screws (11) and new locknuts (10).

12-5. UPPER AND LOWER SPLASH GUARD REPLACEMENT (Contd)

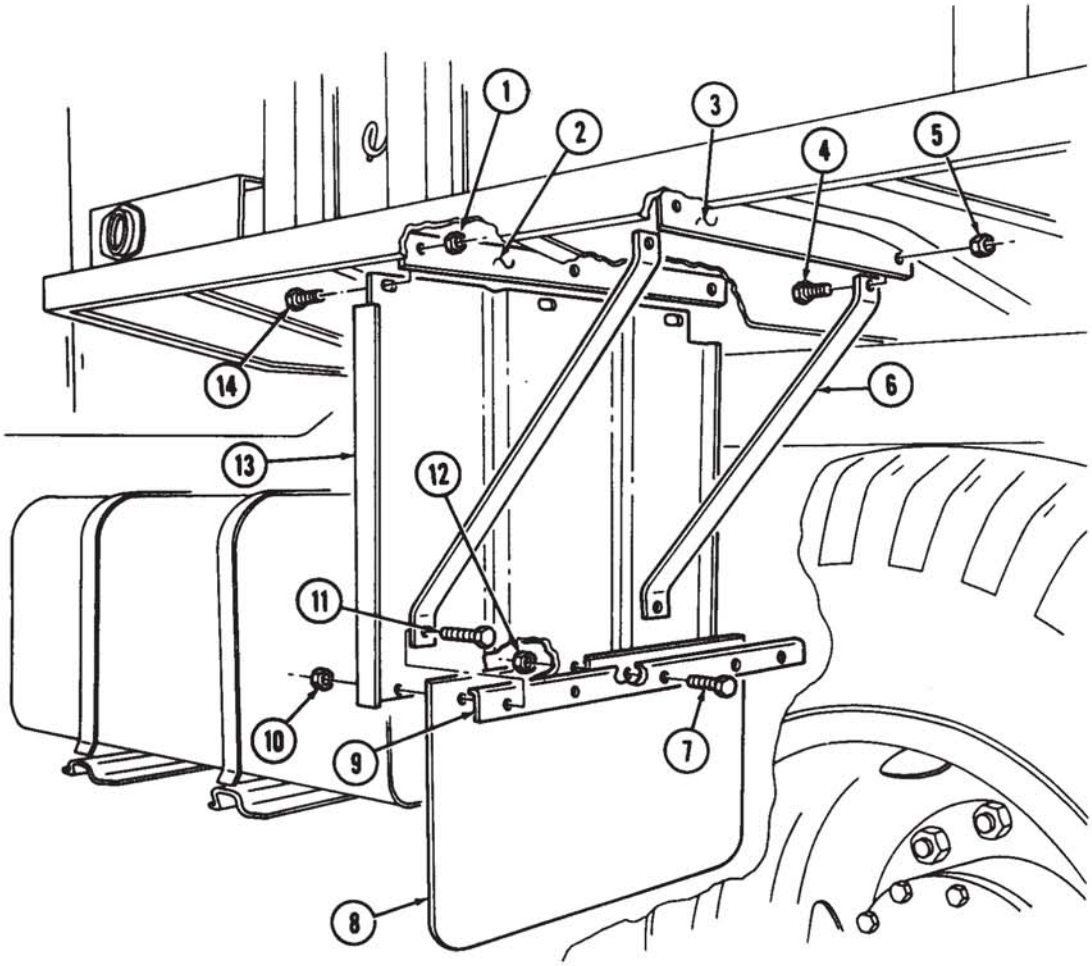

12-6. CARGO TAILGATE REPLACEMENT (M813, M814)

THIS TASK COVERS:

a. Removal **b. Installation**

INITIAL SETUP

APPLICABLE MODELS
M813, M814

MATERIALS/PARTS
Four cotter pins
Four locknuts

REFERENCES (TM)
TM 9-2320-260-10
TM 9-2320-260-20P

EQUIPMENT CONDITION
Parking brake set (TM 9-2320-260-10).

GENERAL SAFETY INSTRUCTIONS
All personnel must stand clear during lifting operations.

a. Removal

1. Install chain on two steps (2) and lifting device.
2. Remove four cotter pins (6), pins (3), and eight washers (4) from tailgate hinges (5). Discard cotter pins (6).

WARNING

All personnel must stand clear during lifting operations. A swinging or shifting load may cause injury or death to personnel.

3. Remove two hooks (8) from tailgate latches (9) and raise tailgate (1) away from cargo body (7).
4. Lower tailgate (1) onto supports and remove chain from two steps (2).
5. Remove four locknuts (12), screws (10), two plates (11), and steps (2) from tailgate (1). Discard locknuts (12).

b. Installation

1. Install two steps (2) and plates (11) on tailgate (1) with four screws (10) and new locknuts (12).
2. Install chain on two steps (2) and lifting device.

WARNING

All personnel must stand clear during lifting operations. A swinging or shifting load may cause injury or death to personnel.

3. Raise tailgate (1) and position on cargo body (7).
4. Install two hooks (8) in tailgate latches (9).
5. Install four pins (3), eight washers (4), and four new cotter pins (6) in tailgate hinges (5).
6. Remove lifting device and chain from two steps (2).

12-6. CARGO TAILGATE REPLACEMENT (M813, M814) (Contd)

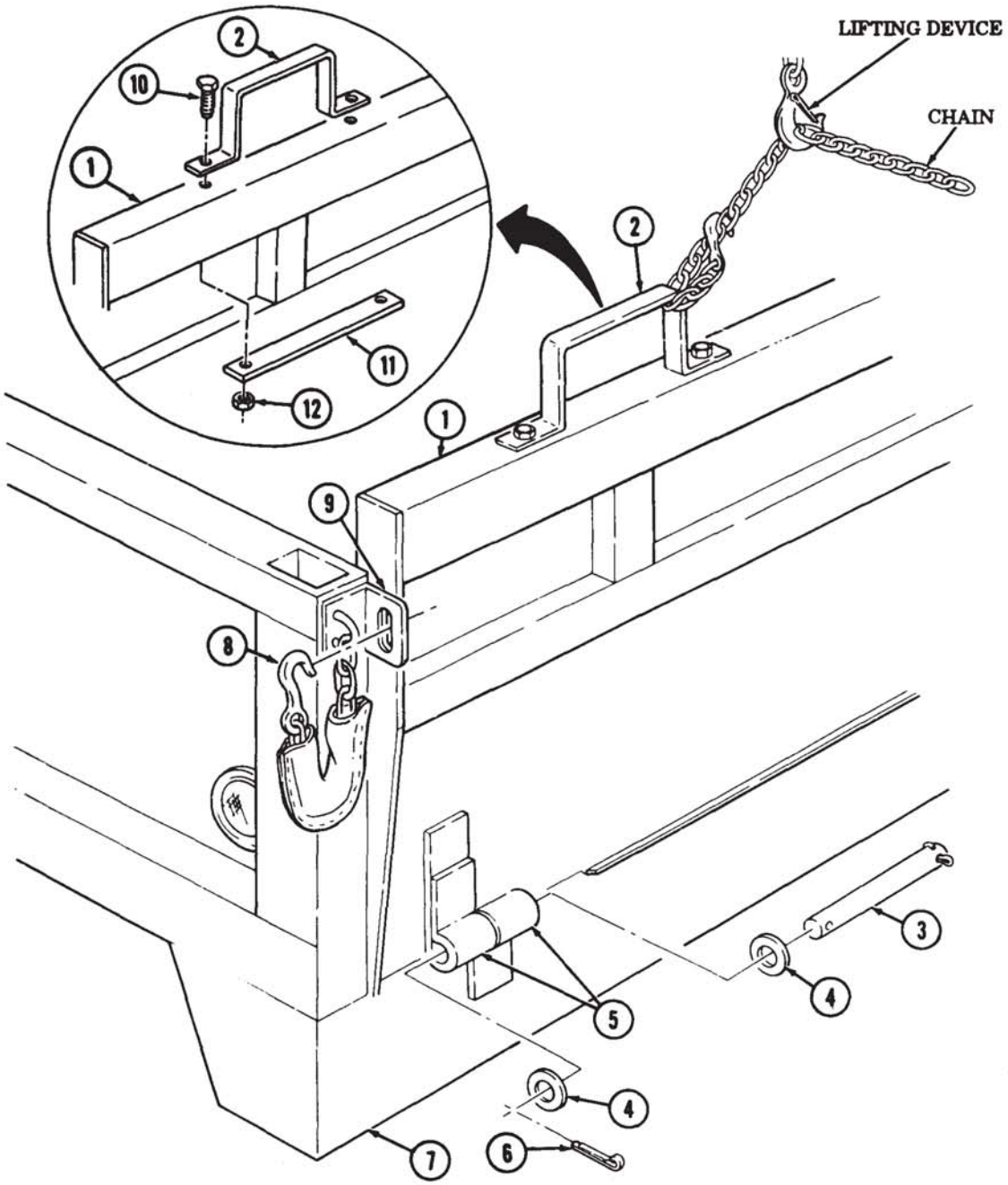

12-7. CARGO TAILGATE REPLACEMENT (M813A1)

THIS TASK COVERS:

a. Removal **b. Installation**

INITIAL SETUP

APPLICABLE MODELS
M813A1

MATERIALS/PARTS
Four cotter pins
Four locknuts

REFERENCES (TM)
TM 9-2320-260-10
TM 9-2320-260-20P

EQUIPMENT CONDITION
Parking brake set (TM 9-2320-260-10).

GENERAL SAFETY INSTRUCTIONS
- Ensure locking handles at forward end of dropsides are engaged.
- All personnel must stand clear during lifting operations.

a. Removal

1. Install chain on two steps (2) and lifting device.

WARNING

Ensure locking handles at forward end of dropsides are engaged before removing tailgate. Failure to do so may cause injury to personnel.

2. Remove two locking handles (8) from tailgate latches (3).
3. Remove four cotter pins (5), eight washers (6), and four pins (4) from tailgate hinges (7). Discard cotter pins (5).

WARNING

All personnel must stand clear during lifting operations. A swinging or shifting load may cause injury or death to personnel.

4. Raise tailgate (1) away from cargo body (9).
5. Lower tailgate (1) onto supports and remove chain from two steps (2).
6. Remove four locknuts (12), screws (10), two plates (11), and steps (2) from tailgate (1). Discard locknuts (12).

b. Installation

1. Install two steps (2) and plates (11) on tailgate (1) with four screws (10) and new locknuts (12).
2. Install chain on two steps (2) and lifting device.

WARNING

All personnel must stand clear during lifting operations. A swinging or shifting load may cause injury or death to personnel.

3. Raise tailgate (1) and position on cargo body (9).
4. Install four pins (4), eight washers (6), and four new cotter pins (5) in tailgate hinges (7).
5. Install two locking handles (8) on tailgate latches (3).
6. Remove lifting device and chain from steps (2).

12-7. CARGO TAILGATE REPLACEMENT (M813A1) (Contd)

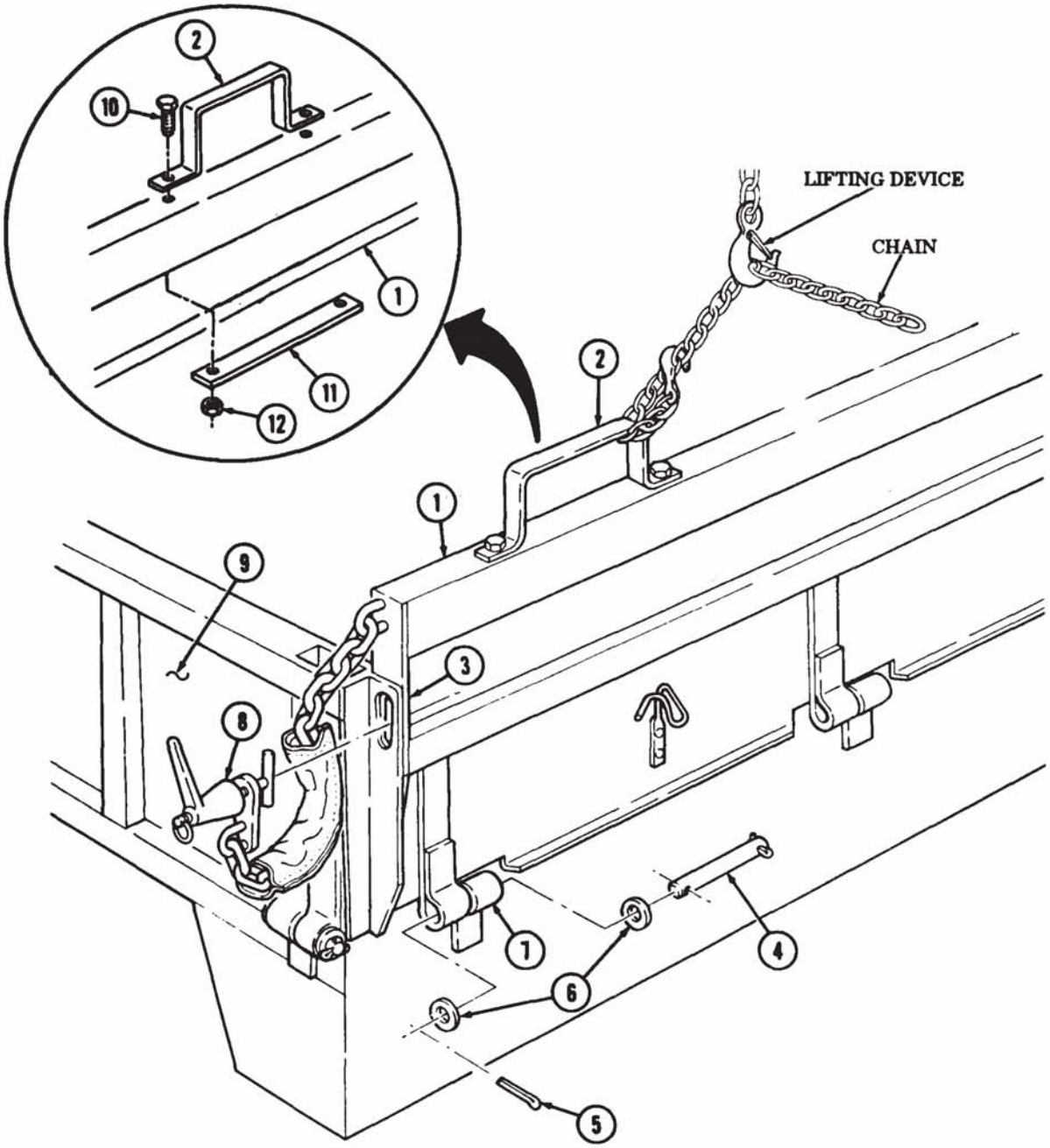

12-8. CARGO SPARE TIRE CARRIER REPLACEMENT (M814)

THIS TASK COVERS:

a. Removal **b. Installation**

INITIAL SETUP

APPLICABLE MODELS
M814

MATERIALS/PARTS
Twelve locknuts
Two lockwashers

REFERENCES (TM)
TM 9-2320-260-10
TM 9-2320-260-20P

EQUIPMENT CONDITION
- Parking brake set (TM 9-2320-260-10).
- Spare tire removed (TM 9-2320-260-10).

a. Removal

1. Remove two locknuts (7), three washers (6), spring (9), and two bolts (2) from spare tire carrier (13). Discard locknuts (7).
2. Remove two nuts (8), screws (11), lockwashers (10), and bracket (3) from spare tire carrier (13). Discard lockwashers (10).
3. Remove ten locknuts (1), screws (4), bracket (14), bracket (5), and spare tire carrier (13) from frame (12). Discard locknuts (l).

b. Installation

1. Install spare tire carrier (13), bracket (5), and bracket (14) with ten screws (4) and new locknuts (1).
2. Install bracket (3) on spare tire carrier (13) with two screws (11), new lockwashers (10), and nuts (8).
3. Install two bolts (2) on spare tire carrier (13) with three washers (6), spring (9), and two new locknuts (7).

12-8. CARGO SPARE TIRE CARRIER REPLACEMENT (M814) (Contd)

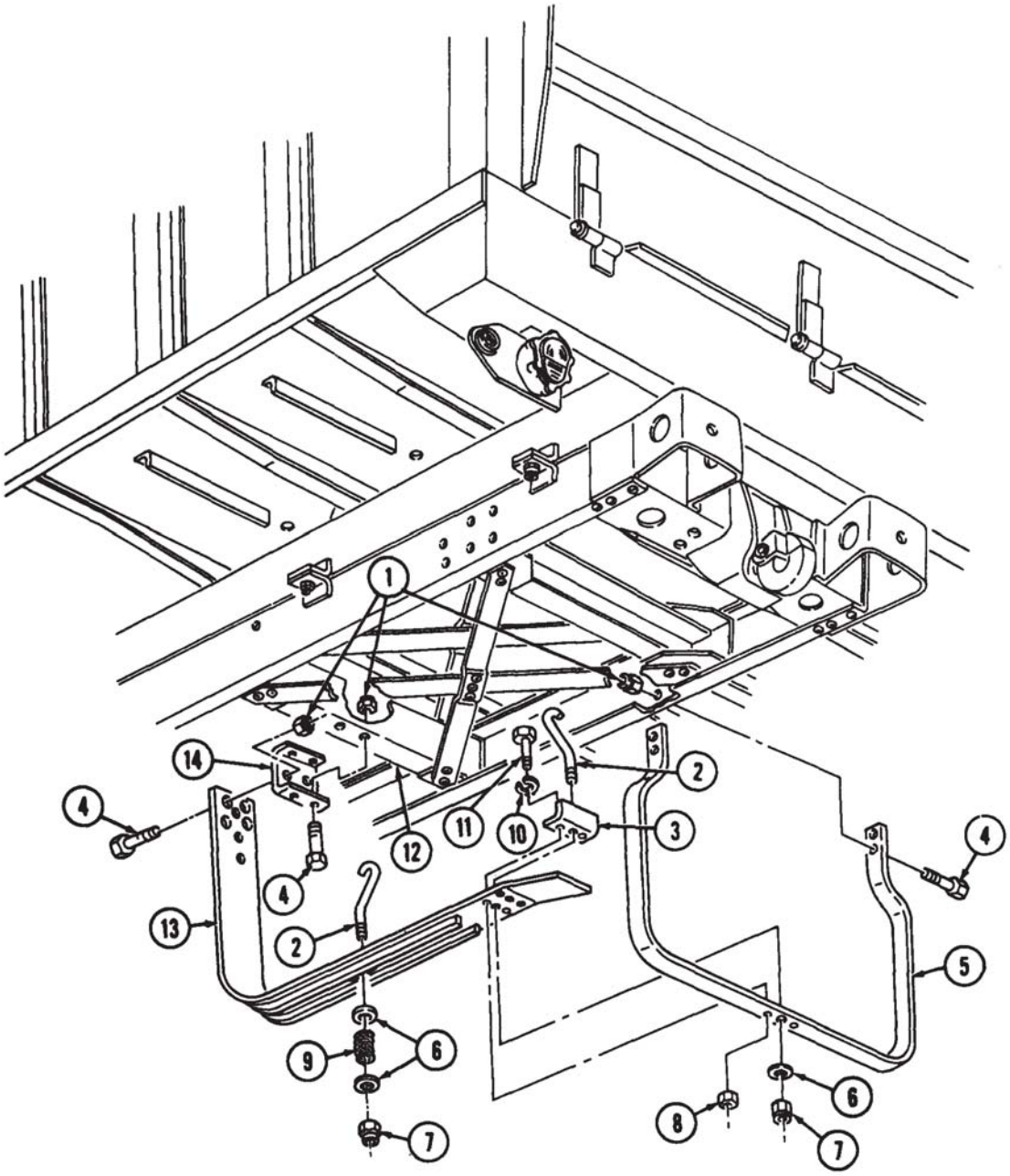

FOLLOW-ON TASK: Install spare tire (TM 9-2320-260-10).

12-9. CARGO PIONEER TOOL KIT BRACKET AND TOOLBOX REPLACEMENT

THIS TASK COVERS:

a. Pioneer Tool Kit Bracket Removal
b. Toolbox Removal
c. Toolbox Installation
d. Pioneer Tool Kit Bracket Installation

INITIAL SETUP

APPLICABLE MODELS
M813, M813A1, M814

MATERIALS/PARTS
Twelve locknuts

REFERENCES (TM)
TM 9-2320-260-10
TM 9-2320-260-20P

EQUIPMENT CONDITION
- Parking brake set (TM 9-2320-260-10).
- Pioneer tool kit tools removed (TM 9-2320-260-10).

a. Pioneer Tool Kit Bracket Removal

Remove four nuts (12), washers (13), screws (2), and pioneer tool kit bracket (1) horn toolbox (3).

b. Toolbox Removal

1. Remove four locknuts (8), screws (11), washers (10), toolbox (3), and toolbox frame (9) from two brackets (7). Discard locknuts (8).
3. Remove eight locknuts (5), screws (6), and two brackets (7) from frame rail (4). Discard locknuts (5).

c. Toolbox Installation

1. Install two brackets (7) on frame rail (4) with eight screws (6) and new locknuts (5).
2. Install toolbox frame (9) and toolbox (3) on two brackets (7) with four screws (11), washers (10), and new locknuts (8).

d. Pioneer Tool Kit Bracket Installation

Install pioneer tool kit bracket (1) on toolbox (3) with four screws (2), washers (13), and nuts (12).

12-9. CARGO PIONEER TOOL KIT BRACKET AND TOOLBOX REPLACEMENT (Contd)

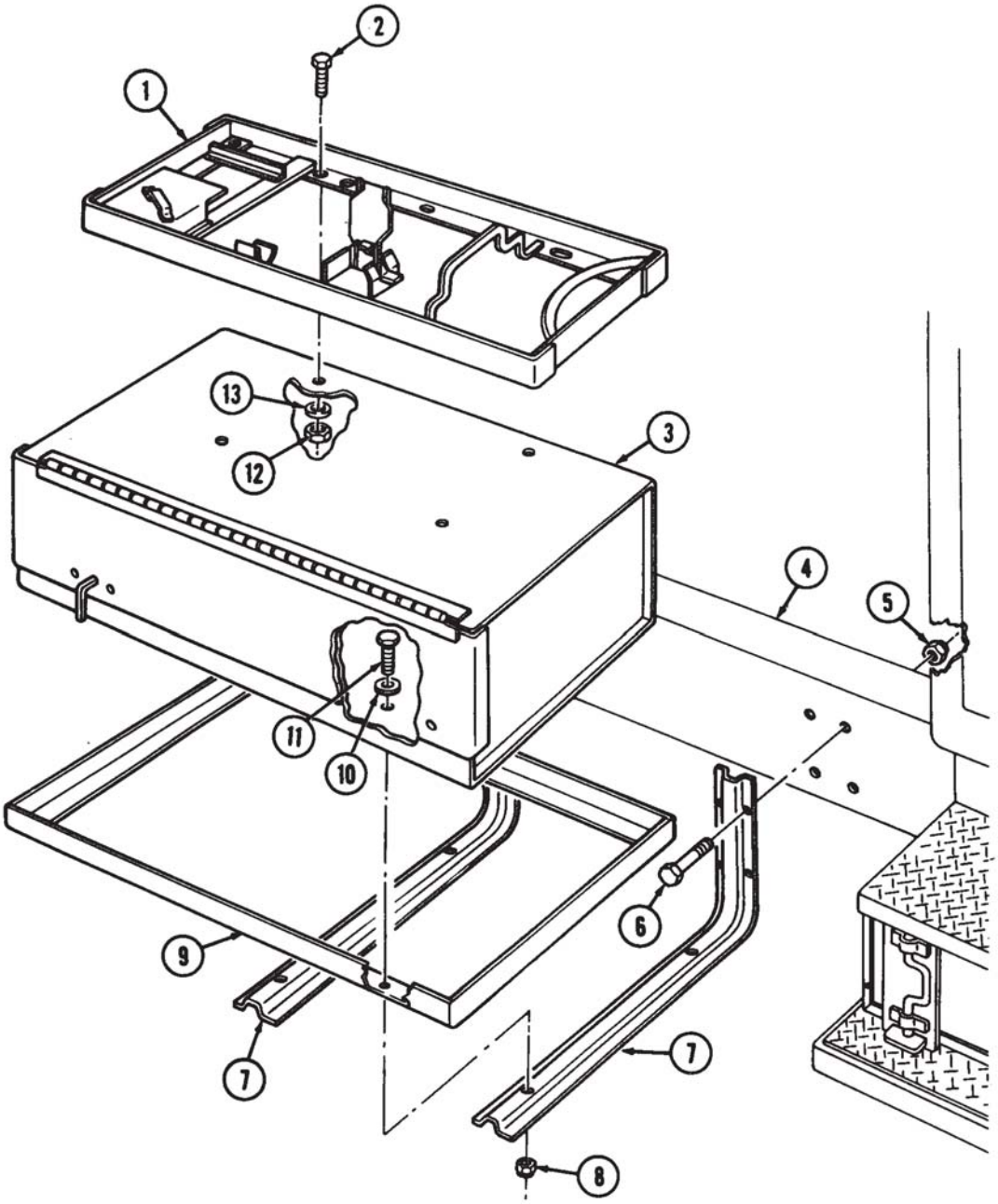

FOLLOW-ON TASK: Install pioneer tool kit tools (TM 9-2320-260-10).

12-10. CARGO SPARE TIRE CARRIER REPLACEMENT (M813, M813A1)

THIS TASK COVERS:

a. Removal **b. Installation**

INITIAL SETUP

APPLICABLE MODELS
M813, M813A1

MATERIALS/PARTS
Four cotter pins

REFERENCES (TM)
TM 9-2320-260-10
TM 9-2320-260-20P

EQUIPMENT CONDITION
- Parking brake set (TM 9-2320-260-10).
- Spare tire removed (TM 9-2320-260-10).

a. Removal

1. Remove four nuts (4) from two studs (3).
2. Remove four cotter pins (1), two pins (2), and studs (3) from mounting bracket (5). Discard cotter pins (1).

b. Installation

1. Install two studs (3) on mounting bracket (5) with two pins (2) and four new cotter pins (1)
2. Install four nuts (4) on two studs (3).

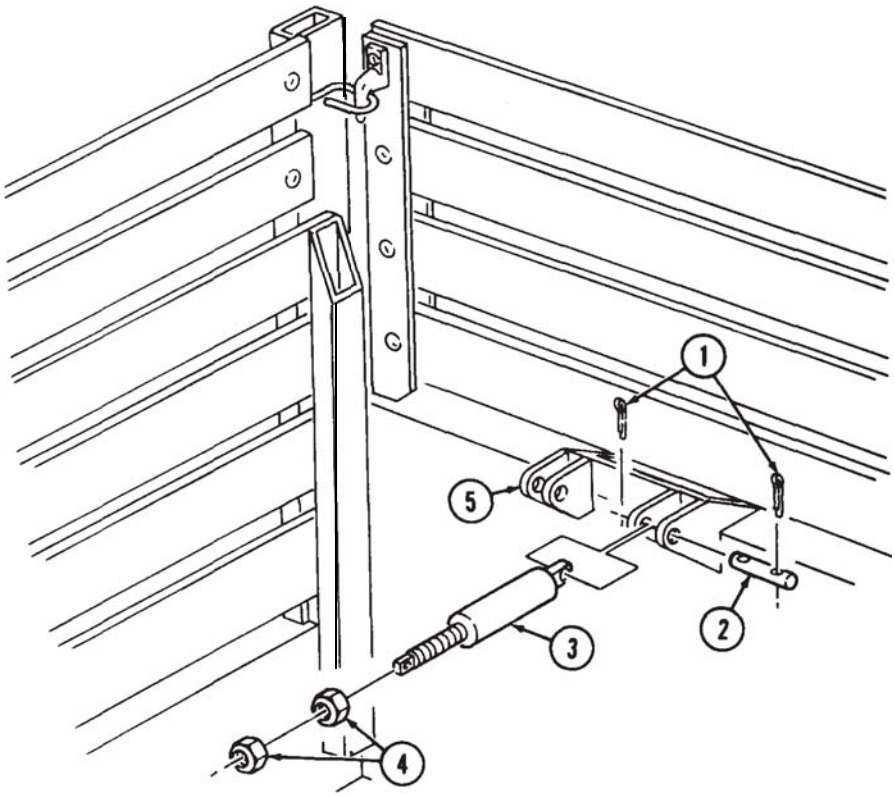

FOLLOW-ON TASK: Install spare tire (TM 9-2320-260-10).

Section II. DUMP BODY MAINTENANCE

12-11. DUMP BODY MAINTENANCE INDEX

PARA. NO.	TITLE	PAGE NO.
12-12.	Dump Body Tailgate Replacement	12-22
12-13.	Dump Body Tailgate Control Linkage Maintenance	12-24
12-14.	Dump Body Spare Tire Carrier Replacement (M817)	12-28
12-15.	Dump Body Toolbox Replacement	12-30
12-16.	Dump Body Pioneer Tool Kit Bracket Replacement	12-32
12-17.	Dump Body Splash Guard Replacement	12-33

12-12. DUMP BODY TAILGATE REPLACEMENT

THIS TASK COVERS:

a. Removal

b. Installation

INITIAL SETUP

APPLICABLE MODELS
M817

MATERIALS/PARTS
Four locknuts

PERSONNEL REQUIRED
Two

REFERENCES (TM)
TM 9-2320-260-10
TM 9-2320-260-20P

EQUIPMENT CONDITION
Parking brake set (TM 9-2320-260-10).

GENERAL SAFETY INSTRUCTIONS
All personnel must stand clear during lifting operations.

a. Removal

1. Install chain on tailgate (4).
2. Install lifting device on chain.
3. Position tailgate control lever to open position (TM 9-2320-260-10).
4. Remove slack from chain and remove two pins (2) from dump body (l).

WARNING

All personnel must stand clear during lifting operations. A swinging or shifting load may cause injury or death to personnel.

5. Remove tailgate (4) from dump body (1) and lower tailgate (4) onto supports.
6. Remove lifting device from chain.
7. Remove chain from tailgate (4)
8. Remove four locknuts (7), two plates (6), four screws (5), and two steps (3) from tailgate (4). Discard locknuts (7).

b. Installation

1. Install two steps (3) and plates (6) on tailgate (4) with four screws (5) and new locknuts (7).
2. Install chain on tailgate (4).
3. Install lifting device on chain.

WARNING

All personnel must stand clear during lifting operations. A swinging or shifting load may cause injury or death to personnel.

4. Raise tailgate (4) and position tailgate (4) on dump body (1).
5. Install two pins (2) on dump body (1).
6. Position tailgate control lever to locked position (TM 9-2320-260-10).
7. Remove lifting device from chain.
8. Remove chain from tailgate (4).

12-12. DUMP BODY TAILGATE REPLACEMENT (Contd)

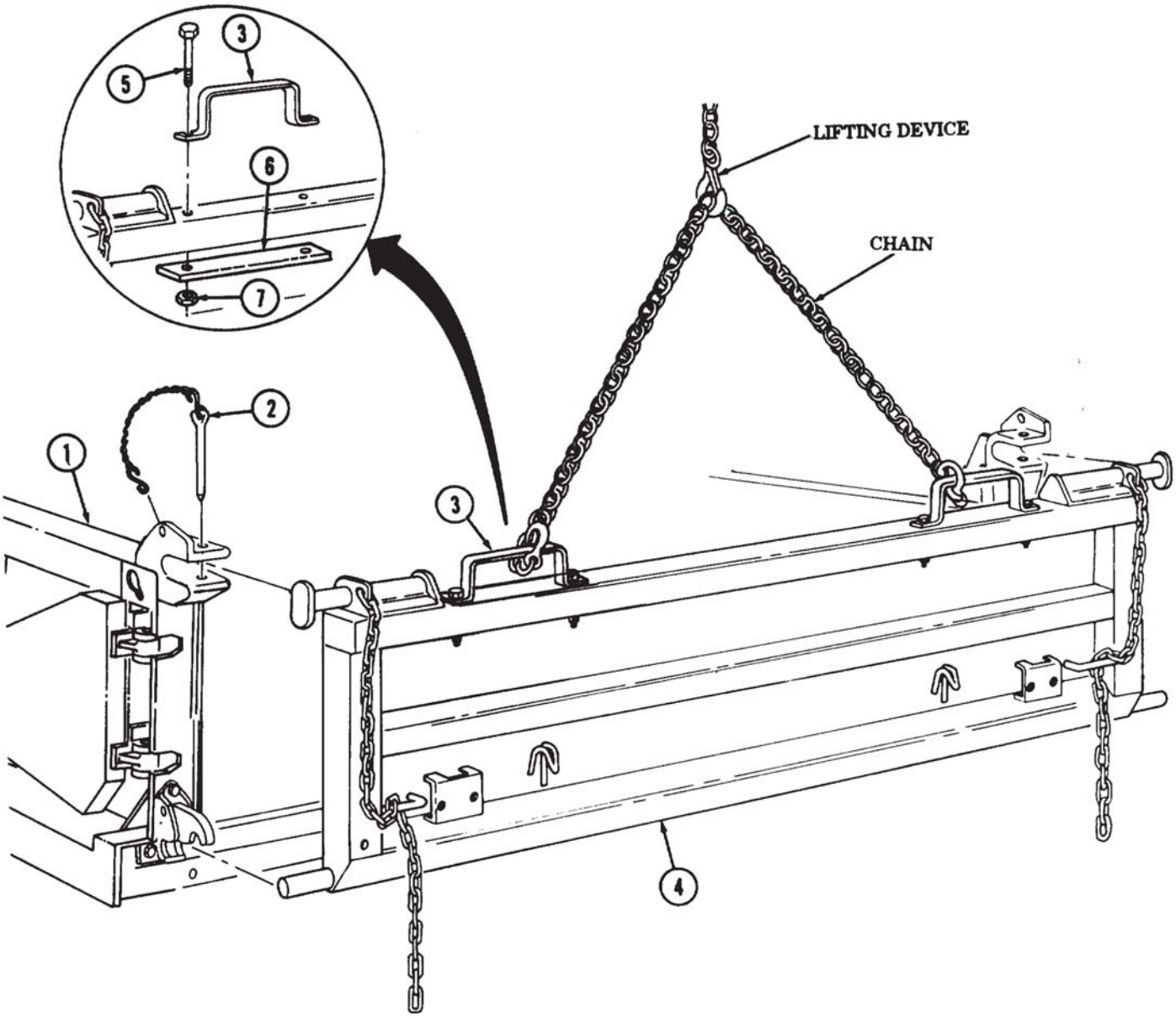

12-13. DUMP BODY TAILGATE CONTROL LINKAGE MAINTENANCE

THIS TASK COVERS:

a. Removal
b. Installation
c. Adjustment

INITIAL SETUP

APPLICABLE MODELS
M817

MATERIAIS/PARTS
Twenty locknuts
Two woodruff keys

REFERENCES (TM)
TM 9-2320-260-10
TM 9-2320-260-20P

EQUIPMENT CONDITION
- Parking brake set (TM 9-2320-260-10).
- Dump body raised and safety braces in place (TM 9-2320-260-10).

a. Removal

1. Place tailgate control lever (15) to open position to release tailgate (24) (TM 9-2320-260-10).
2. Remove two locknuts (6), screws (2), and washers (4) from brackets (3) and levers (5) and (15). Discard locknuts (6).
3. Remove two locknuts (7) and screws (14) from levers (5) and (15). Discard locknuts (7).
4. Remove two levers (5) and (15) from cross-shaft (17).
5. Remove six locknuts (8), screws (11), and three brackets (9) from mounting brackets (10). Discard locknuts (8).
6. Remove cross-shaft (17) from dump body (28).
7. Remove two nuts (1) and brackets (3) from control rods (13).
8. Remove two woodruff keys (16) from cross-shaft (17). Discard woodruff keys (16).
9. Remove two nuts (12) from control rods (13).
10. Remove four locknuts (21), two link plates (20) and (29), and ten washers (19) from two control rods (13) and control bars (18). Discard locknuts (21).
11. Remove six locknuts (22), screws (23), and two tailgate latch brackets (25) with control bars (18) from dump body (28). Discard locknuts (22).
12. Remove two control rods (13) from dump body (28).
13. Remove four pins (27), two control bars (18), and latches (26) from latch brackets (25).

12-13. DUMP BODY TAILGATE CONTROL LINKAGE MAINTENANCE (Contd)

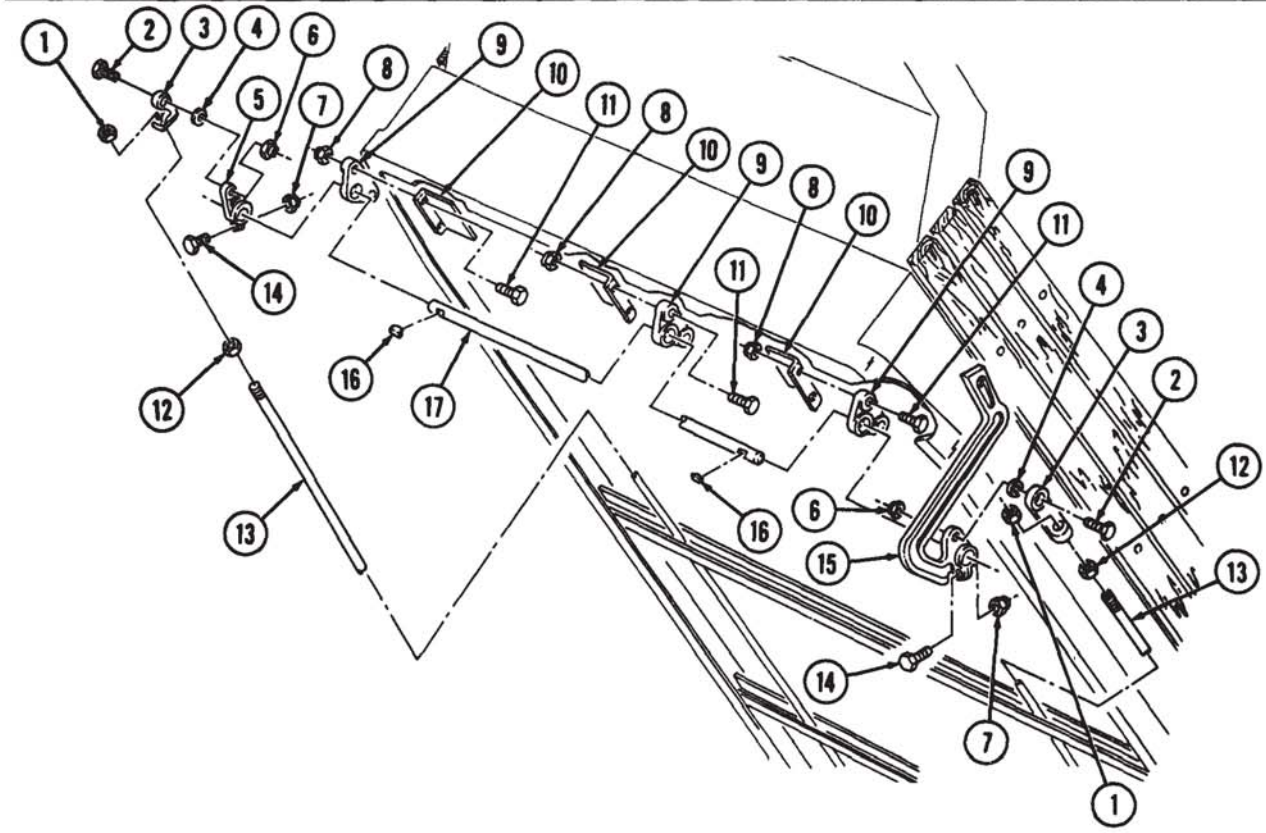

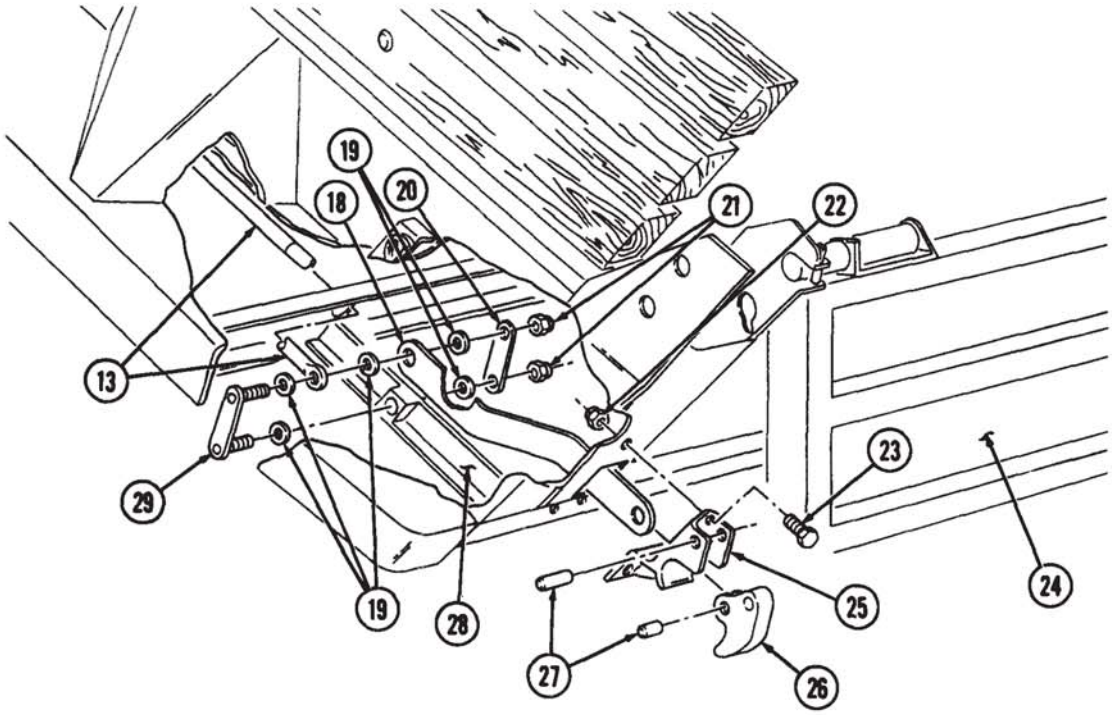

12-13. DUMP BODY TAILGATE CONTROL LINKAGE MAINTENANCE (Contd)

b. Installation

1. Install two control bars (18) and latches (26) on latch brackets (25) with four pins (27).
2. Position two control rods (13) in dump body (28).
3. Install two tailgate latch brackets (25) with control bars (18) on dump body (28) with six screws (23) and new locknuts (22).
4. Install ten washers (19), two link plates (20) and (29), two control rods (13), and control bars (18) on dump body (28) with four new locknuts (21).
5. Install two nuts (12) on control rods (13).
6. Install two brackets (3) on control rods (13) with two nuts (1).
7. Install cross-shaft (17) and three brackets (9) on mounting brackets (10) with six screws (11) and new locknuts (8).
8. Install two new woodruff keys (16) on cross-shaft (17).
9. Install levers (5) and (15) on cross-shaft (17) with two screws (14) and new locknuts (7).
10. Install two brackets (3) on levers (5) and (15) with two screws (2), washers (4), and new locknuts (6).

c. Adjustment

NOTE

Left and right control rods are adjusted the same way. This task covers the left control rod only.

1. Lower dump body (28) and position control lever (15) to locked position (TM 9-2320-260-10).
2. Tighten nut (1) on control rod (13) until latches (26) lock tailgate (24).
3. Tighten nut (12) on control rod (13).
4. Raise dump body (28) and position control lever (15) to open position. Ensure two latches (26) release tailgate (24) (TM 9-2320-260- 10).
5. Lower dump body (28) and position control lever (15) to locked position. Ensure both latches (26) lock tailgate (24) (TM 9-2320-260-10).

12-13. DUMP BODY TAILGATE CONTROL LINKAGE MAINTENANCE (Contd)

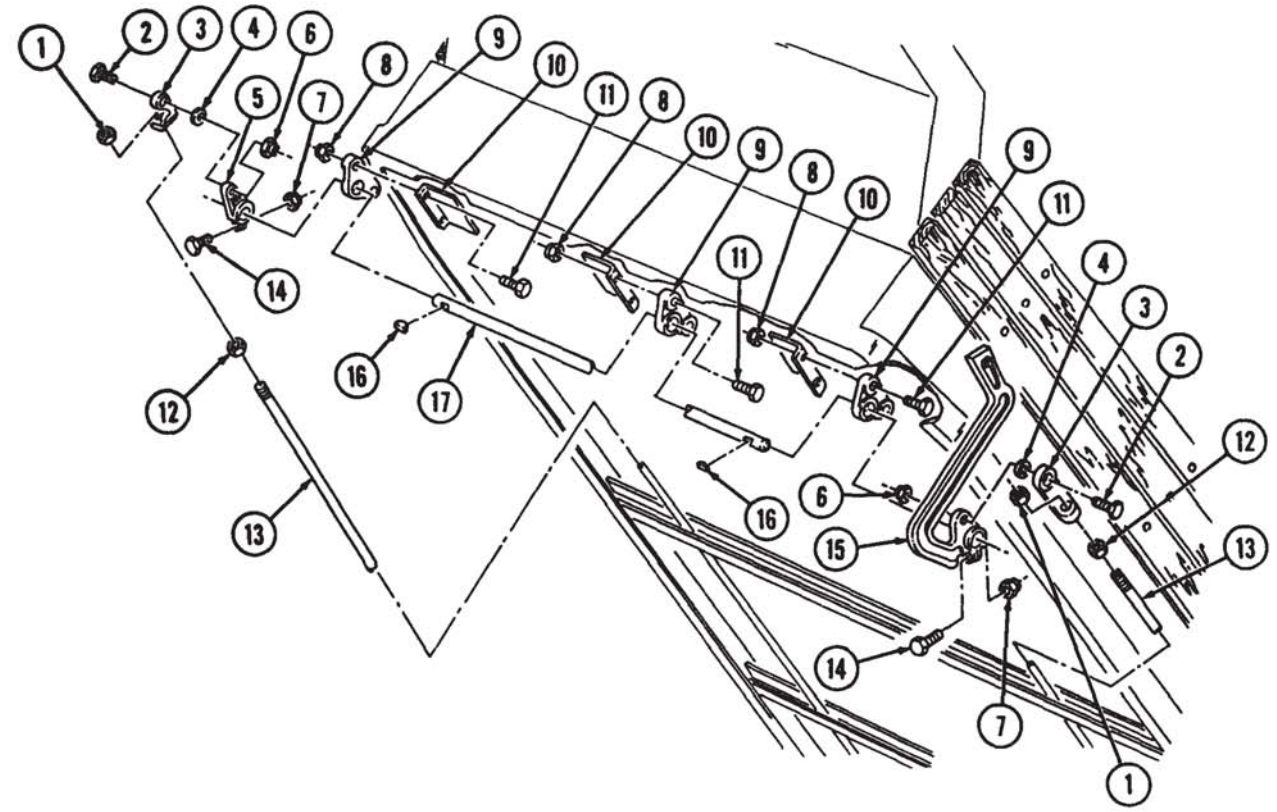

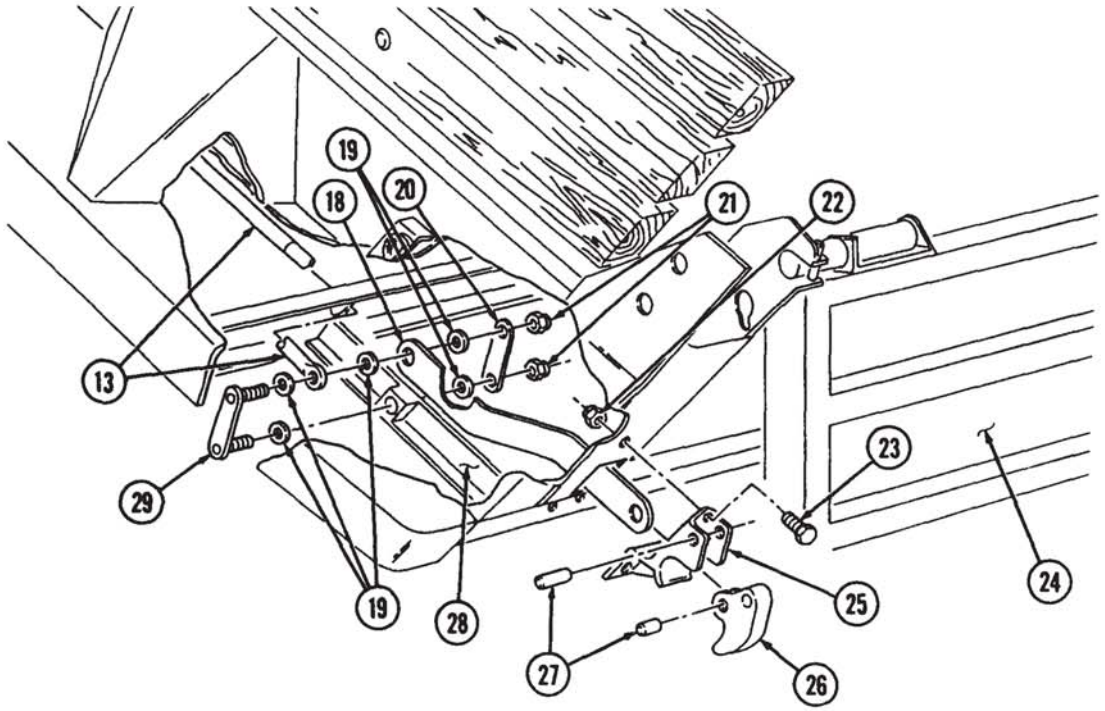

12-14. DUMP BODY SPARE TIRE CARRIER REPLACEMENT (M817)

THIS TASK COVERS:

a. Removal **b. Installation**

INITIAL SETUP

APPLICABLE MODELS
M817

MATERIALS/PARTS
Sixteen locknuts

PERSONNEL REQUIRED
Two

REFERENCES (TM)
TM 9-2320-260-10
TM 9-2320-260-20P

EQUIPMENT CONDITION
- Parking brake set (TM 9-2320-260-10).
- Spare tire removed (TM 9-2320-260-10).
- Toolbox removed (para. 12-15).

a. Removal

1. Remove two locknuts (4), screws (1), and angle brackets (2) from bracket (3). Discard locknuts (4).
2. Remove two locknuts (22) and (5), screws (6) and (10), and braces (9) from bracket (3) and spare tire carrier base (8). Discard locknuts (5) and (22).
3. Remove two locknuts (23), screws (16), and bracket (3) from spare tire carrier base (8). Discard locknuts (23).
4. Remove two locknuts (13) and (19), screws (7) and (21), and spare tire carrier base (8) from brackets (12) and (18). Discard locknuts (13) and (19).
5. Remove two locknuts (15) and (17), screws (11) and (20), and brackets (12) and (18) from frame (14). Discard locknuts (15) and (17).

b. Installation

1. Install brackets (12) and (18) on frame (14) with two screws (11) and (20) and new locknuts (15) and (17).
2. Install spare tire carrier base (8) on brackets (12) and (18) with four screws (7) and (21) and new locknuts (13) and (19).
3. Install bracket (3) on spare tire carrier base (8) with two screws (16) and new locknuts (23).
4. Install two braces (9) on spare tire carrier base (8) and bracket (3) with two screws (6) and (10) and new locknuts (22) and (5).
5. Install two angle brackets (2) on bracket (3) with two screws (1) and new locknuts (4).

12-14. DUMP BODY SPARE TIRE CARRIER REPLACEMENT (M817) (Contd)

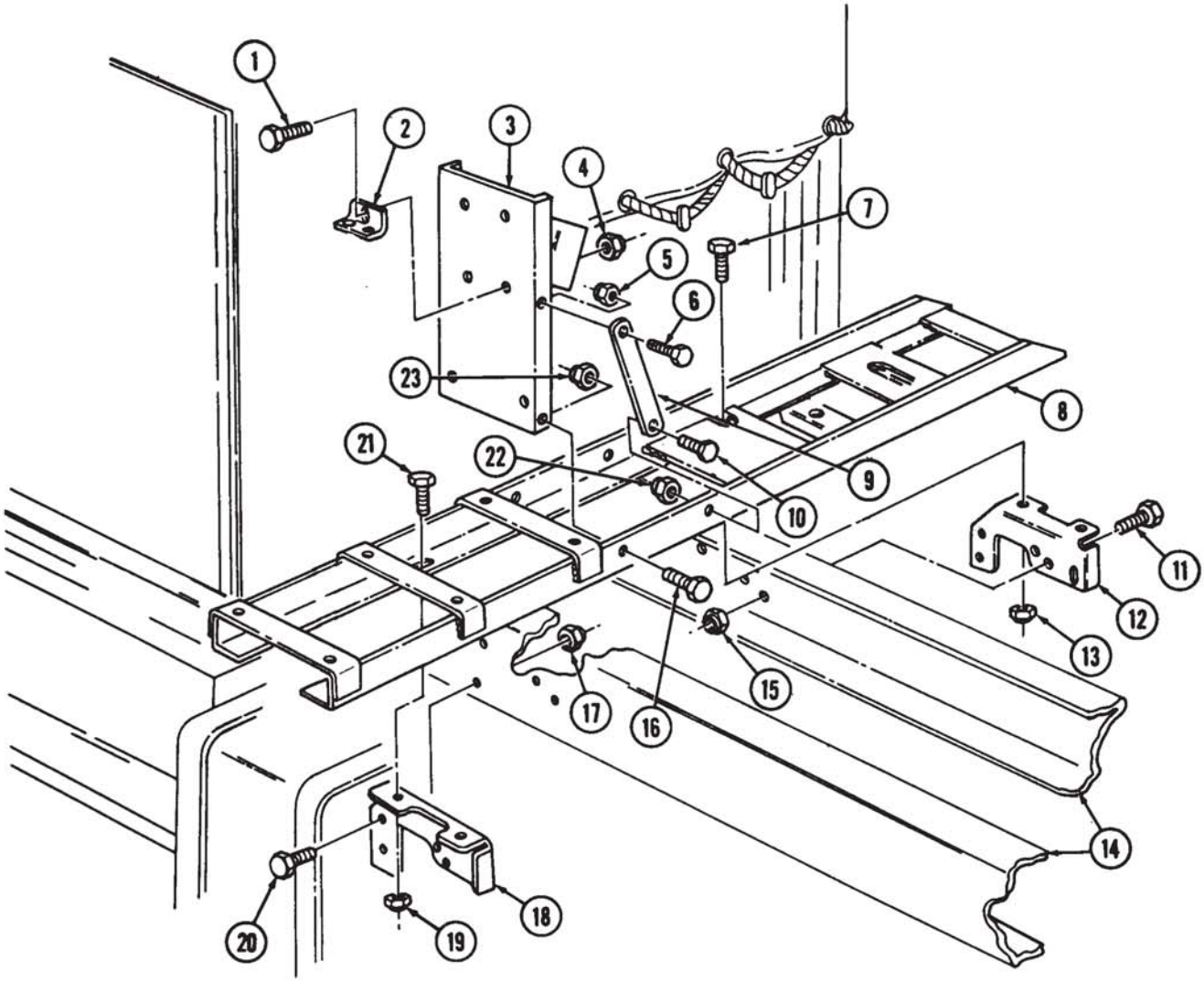

FOLLOW-ON TASKS: • Install toolbox (para. 12-15).
• Install spare tire (TM 9-2320-260-10).

12-15. DUMP BODY TOOLBOX REPLACEMENT

THIS TASK COVERS:

a. Removal **b. Installation**

INITIAL SETUP

APPLICABLE MODELS
M817

MATERIALS/PARTS
Ten locknuts

REFERENCES (TM)
TM 9-2320-260-10
TM 9-2320-260-20P

EQUIPMENT CONDITION
- Parking brake set (TM 9-2320-260-10).
- Pioneer tool kit bracket removed (para 12-16).

a. Removal

1. Remove four locknuts (4) and screws (5) from two brackets 6) and toolbox (1). Discard locknuts (4).
2. Remove six locknuts (8), washers (3), screws (2), and toolbox (1) from spare tire carrier base (7).

b. Installation

1. Install toolbox (1) on spare tire carrier base (7) with six screws (2), washers (3), and new locknuts (8).
2. Install toolbox (1) on two brackets (6) with four screws (5) and new locknuts (4).

12-15. DUMP BODY TOOLBOX REPLACEMENT (Contd)

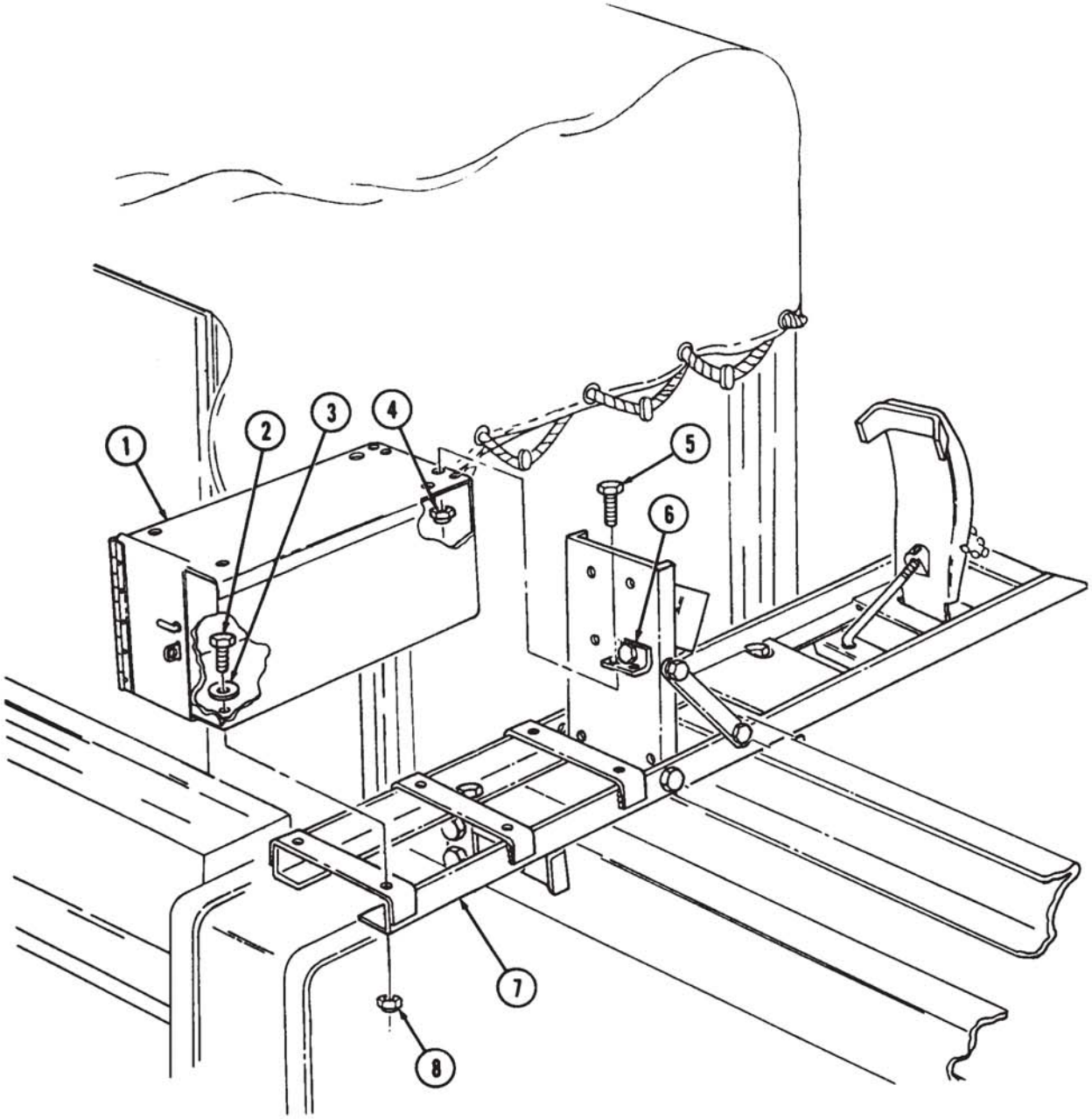

FOLLOW-ON TASK: Install pioneer tool kit bracket (para. 12-16).

12-16. DUMP BODY PIONEER TOOL KIT BRACKET REPLACEMENT

THIS TASK COVERS:

a. Removal **b. Installation**

INITIAL SETUP

APPLICABLE MODELS
M817

MATERIAI.S/PARTS
Eight locknuts

REFERENCES (TM)
TM 9-2320-260-10
TM 9-2320-260-20P

EQUIPMENT CONDITION
- Parking brake set (TM 9-2320-260-10).
- Pioneer tools removed (TM 9-2320-260-10).

a. Removal

1. Remove four locknuts (4), washers (3), screws (1), and bracket (2) from mounting brackets (5) and (10). Discard locknuts (4).
2. Remove four locknuts (6), washers (7), screws (11), and mounting brackets (5) and (10) from toolbox (9) and brace (8). Discard locknuts (6).

b. Installation

1. Install mounting brackets (10) and (5) on toolbox (9) and brace (8) with four screws (11), washers (7), and new locknuts (6).
2. Install bracket (2) on mounting brackets (10) and (5) with four screws (1), washers (3), and new locknuts (4).

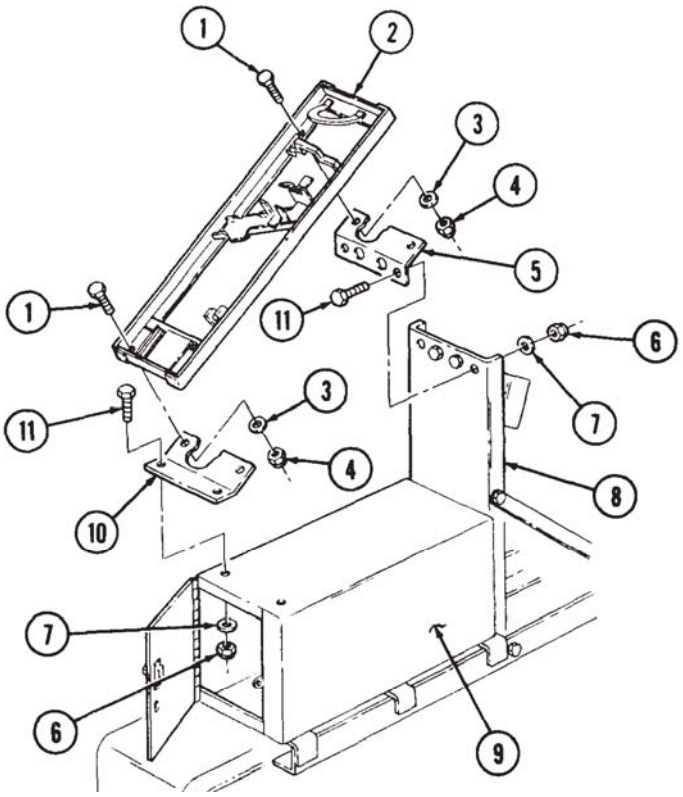

FOLLOW-ON TASK: Install pioneer tools (TM 9-2320-260-10).

12-17. DUMP BODY SPLASH GUARD REPLACEMENT

THIS TASK COVERS:

a. Removal **b. Installation**

INITIAL SETUP

APPLICABLE MODELS
M817

MATERIALS/PARTS
Seven locknuts

REFERENCES (TM)
TM 9-2320-260-10
TM 9-2320-260-20P

EQUIPMENT CONDITION
Parking brake set (TM 9-2320-260-10).

a. Removal

1. Remove two locknuts (6), screws (9), plate (8), and hook (7) from splash guard (5). Discard locknuts (6).
2. Remove locknut (11), screw (2), and hinge plate (3) from splash guard (5) and dump body (1). Discard locknut (11).
3. Remove four locknuts (10), screws (4), splash guard (5), and retainer (12) from dump body (1). Discard locknuts (10).

b. Installation

1. Install splash guard (5) and retainer (12) on dump body (1) with four screws (4) and new locknuts (10).
2. Install hinge plate (3) on dump body (1) and splash guard (5) with screw (2) and new locknut (11).
3. Install hook (7) and plate (8) on splash guard (5) with two screws (9) and new locknuts (6).

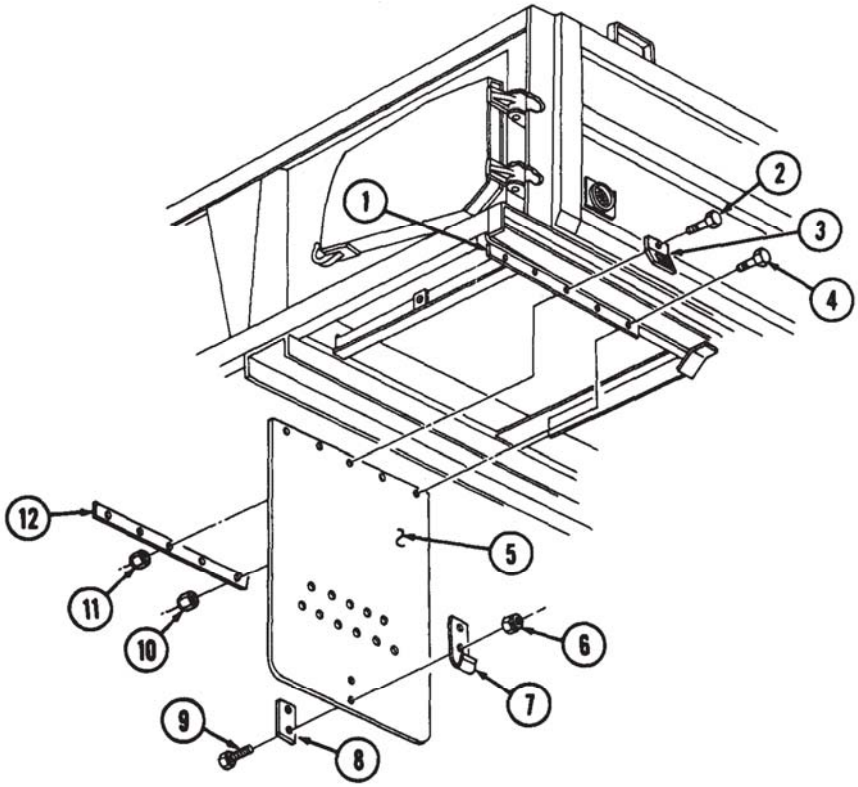

Section III. VAN BODY MAINTENANCE

12-18. VAN BODY MAINTENANCE INDEX

PARA. NO.	TITLE	PAGE NO.
12-19.	Window Brushguard Replacement	12-35
12-20.	Window Blackout Panel Replacement	12-36
12-21.	Rear Door Window Replacement	12-38
12-22.	Retractable Window Replacement	12-40
12-23.	Hinged Roof and Floor Counterbalance Cable Replacement	12-42
12-24.	Rear Door Lock Replacement	12-44
12-25.	Panel Seals Replacement	12-46
12-26.	Side Panel Lock Replacement	12-52
12-27.	Hinged Roof Panel Lock Replacement	12-54
12-28.	Rear Door Blackout Switch Replacement	12-56
12-29.	Blackout Switch Replacement	12-57
12-30.	Van Body Lifting Brackets Replacement	12-58
12-31.	Hinged Roof Panel Maintenance	12-60
12-32.	Van Telephone Jack Replacement	12-66
12-33.	Thermostatic Switch and Fluorescent Starter Replacement	12-68
12-34.	3-Phase and 400 Hz Receptacles Replacement	12-72
12-35.	Ceiling, Wall Switches, and Receptacles Replacement	12-74
12-36.	Expanding and Retracting Mechanism Lock Replacement	12-75
12-37.	Van Heater and Exhaust Replacement	12-76
12-38.	Bonnet Control Rod Replacement	12-80
12-39.	Hinged Roof Blackout Plungera Replacement	12-82
12-40.	Interior and Exterior Telephone Jacks Replacement	12-84
12-41.	Blackout and Emergency Lamps Replacement	12-86
12-42.	Fluorescent Lights Replacement	12-87
12-43.	Air Conditioner Drain Tube Replacement	12-88
12-44.	Bonnet Access Door Maintenance	12-89
12-45.	Ceiling Light Fixtures Maintenance	12-94
12-46.	Spare Tire Carrier Replacement	12-98
12-47.	Van Pioneer Tool Kit Bracket Replacement	12-100

12-19. WINDOW BRUSHGUARD REPLACEMENT

THIS TASK COVERS:

a. Removal **b. Installation**

INITIAL SETUP

APPLICABLE MODELS
M820, M820A2

REFERENCES (TM)
TM 9-2320-260-10
TM 9-2320-260-20P

EQUIPMENT CONDITION
Parking brake set (TM 9-2320-260-10).

a. Removal

1. Release two latches (4) on window fLame (5).
2. Remove two setscrews (2) and hinge pins (6) from hinges (1).
3. Remove brushguard (3) from window frame (5).

b. Installation

1. Position brushguard (3) in window frame (5).
2. Install two hinge pins (6) in hinges (1) with setscrews (2).
3. Fasten two latches (4) on window frame (5).

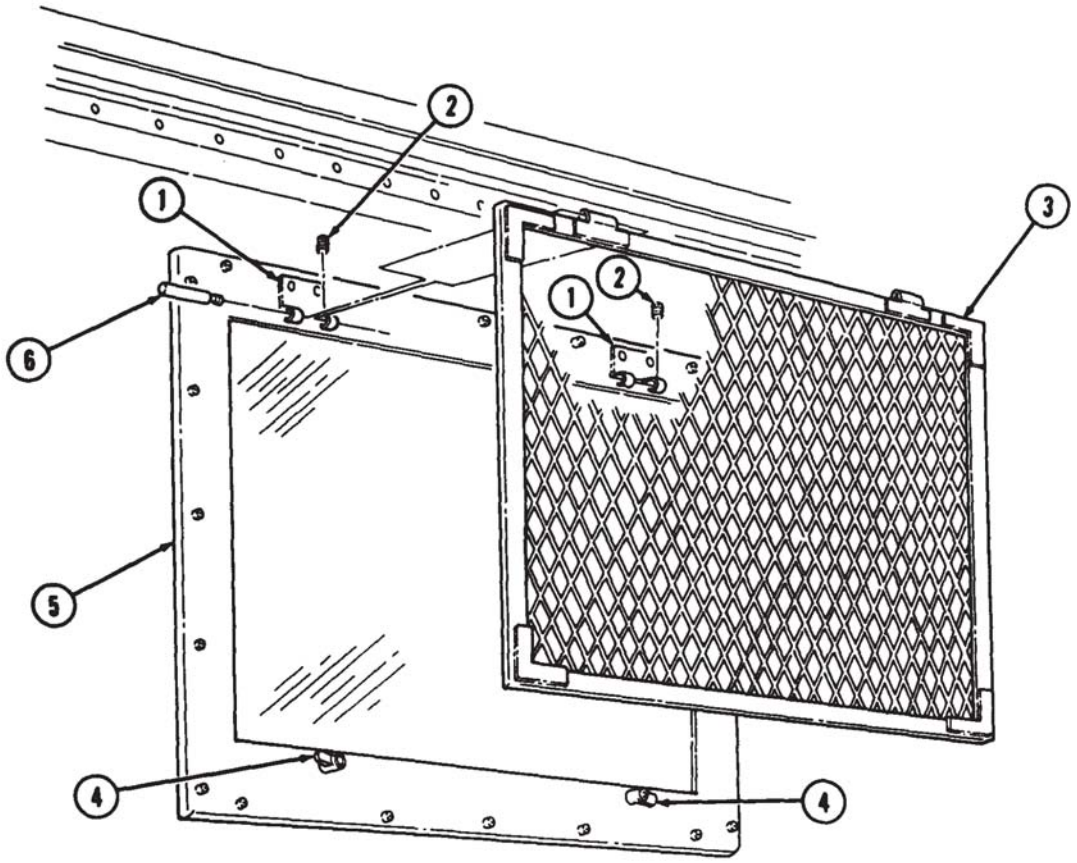

12-20. WINDOW BLACKOUT PANEL REPLACEMENT

THIS TASK COVERS:

a. Removal **b. Installation**

INITIAL SETUP

APPLICABLE MODELS
M820, M820A2

REFERENCES (TM)
TM 9-2320-260-10
TM 9-2320-260-20P

EQUIPMENT CONDITION
Parking brake set (TM 9-2320-260-10).

a. Removal

1. Remove two screws (7), strap (9), and blackout panel (5) from blackout panel guide frame (6).
2. Remove thirteen screws (8) and blackout panel guide frame (6) from window frame (1).
3. Remove two trim pieces (3) from window frame (1).
4. Remove three screws (4) and trim piece (11) from window frame (1).
5. Remove trim piece (2) from window frame (1).
6. Remove four spring bands (9) from blackout panel (2).

b. Installation

1. Install trim piece (11) on window frame (1) with three screws (4).
2. Install two trim pieces (3) on window frame (1).
3. Install trim piece (2) on window frame (1).
4. Install four spring bands (10) on blackout panel (5).
5. Install blackout panel guide frame (6) two trim pieces (3), (2), and (11) on window frame (1) with thirteen screws (8).
6. Install blackout panel (5) in blackout panel guide frame (6) with strap (9) and two screws (7).

12-20. WINDOW BLACKOUT PANEL REPLACEMENT (Contd)

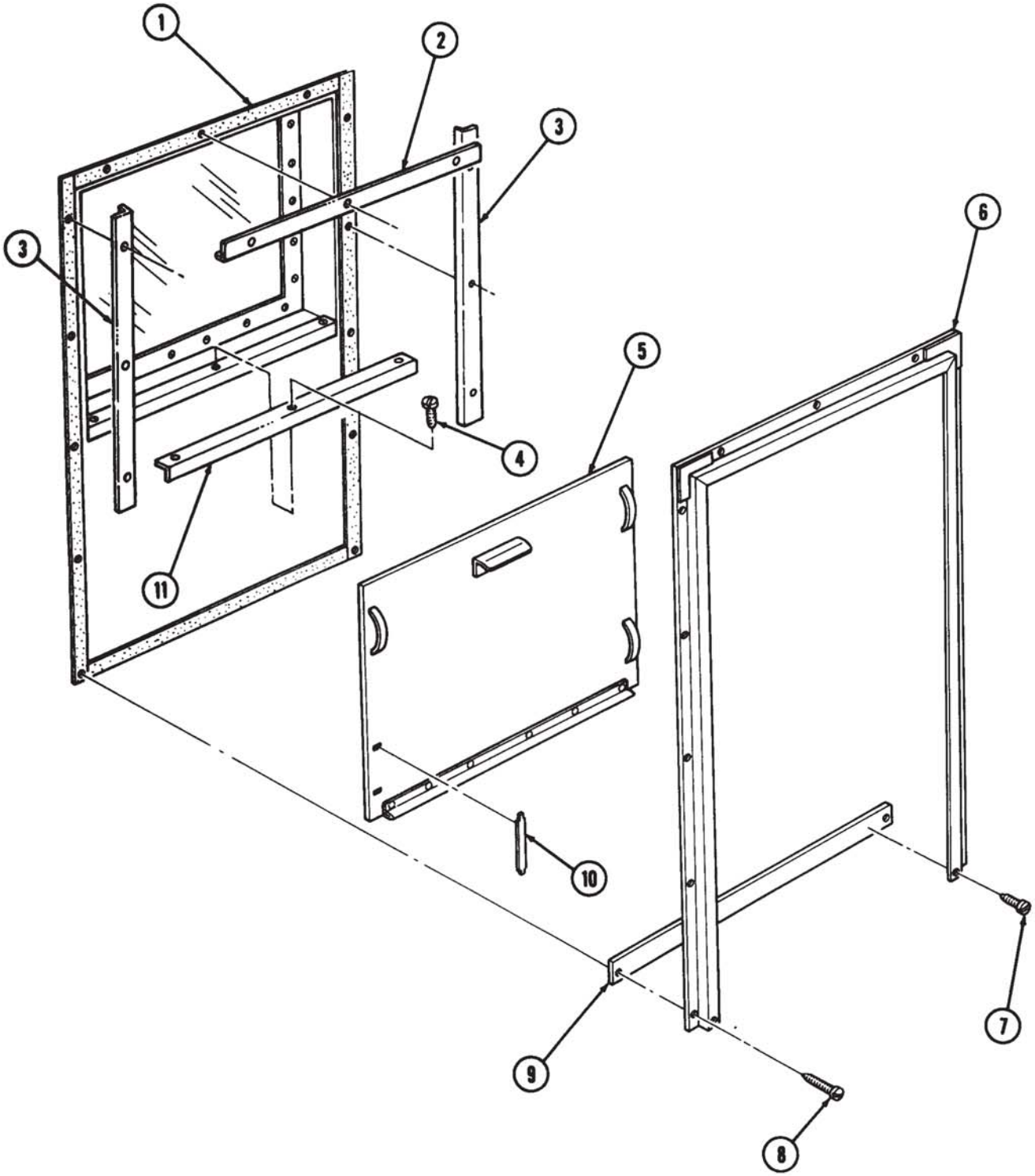

12-21. REAR DOOR WINDOW REPLACEMENT

THIS TASK COVERS:

a. Removal **b. Installation**

INITIAL SETUP

APPLICABLE MODELS
M820, M820A2

REFERENCES (TM)
TM 9-2320-260-10
TM 9-2320-260-20P

EQUIPMENT CONDITION
Parking brake set (TM 9-2320-260-10).

GENERAL SAFETY INSTRUCTIONS
Use eyeshields and gloves when removing and installing door window glass.

WARNING

Use eyeshields and gloves when removing and installing door window glass. Glass could shatter, causing injury to personnel.

a. Removal

1. Remove eighteen screws (5), retainer (4), window glass (2), and window glass seal (3) from window frame (l).
2. Remove window glass seal (3) from window glass (2).

b. Installation

1. Install window glass seal (3) on window glass (2).
2. Install window glass (2), window glass seal (3), and retainer (4) on window frame (1) with eighteen screws (5).

12-21. REAR DOOR WINDOW REPLACEMENT (Contd)

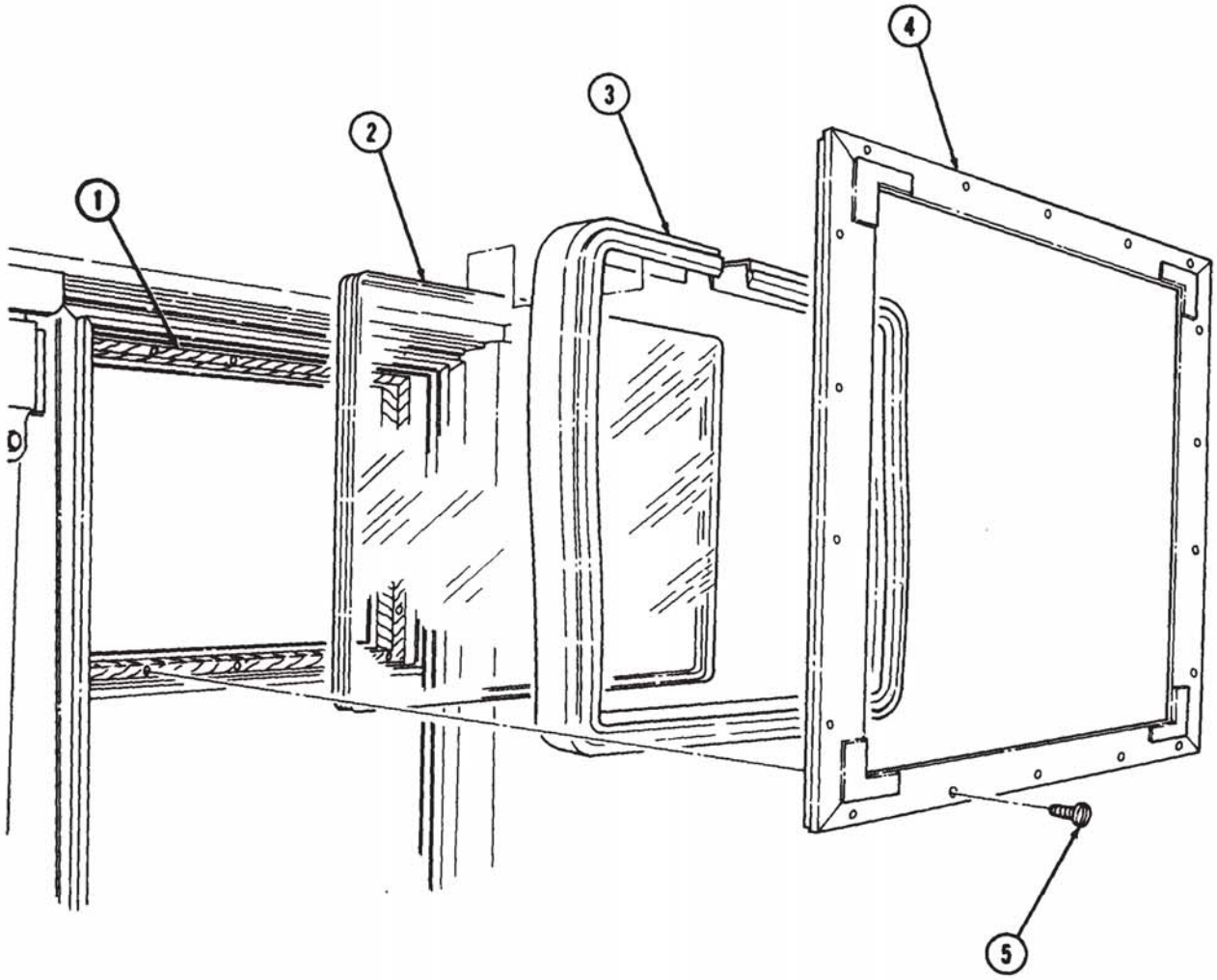

12-22. RETRACTABLE WINDOW REPLACEMENT

THIS TASK COVERS:

a. Removal **b. Installation**

INITIAL SETUP

APPLICABLE MODELS
M820, M820A2

MATERIALS/PARTS
Cotter pin

REFERENCES (TM)
TM 9-2320-260-10
TM 9-2320-260-20P

EQUIPMENT CONDITION
- Parking brake set(TM 9-2320-260-10).
- Van body fully expanded (TM 9-2320-260-10).
- Windows fully opened (TM 9-2320-260-10).

a. Removal

1. Remove tubing (1) and screen (2) from inside window frame (3).
2. Remove cotter pin (10) and window regulator (7) from window (9). Discard cotter pin (10).
3. Remove screw (6) and tilt window (9) upward and slide out of hinge (4).
4. Remove four window glass seals (8) from window (9).
5. Remove screw (12) and handle (11) from window regulator (7).
6. Remove three screws (5) and window regulator (7) from inside window frame (3).

b. Installation

1. Install window regulator (7) on inside window frame (3) with three screws (5).
2. Install handle (11) on window regulator (7) with screw (5).
3. Install four window glass seals (8) on window (9).
4. Slide window (9) in hinge (4) and install with screw (6).
5. Install window regulator (7) on window (9) with new cotter pin (10).
6. Install screen (2) on inside window frame (3) with tubing (1).

12-22. RETRACTABLE WINDOW REPLACEMENT (Contd)

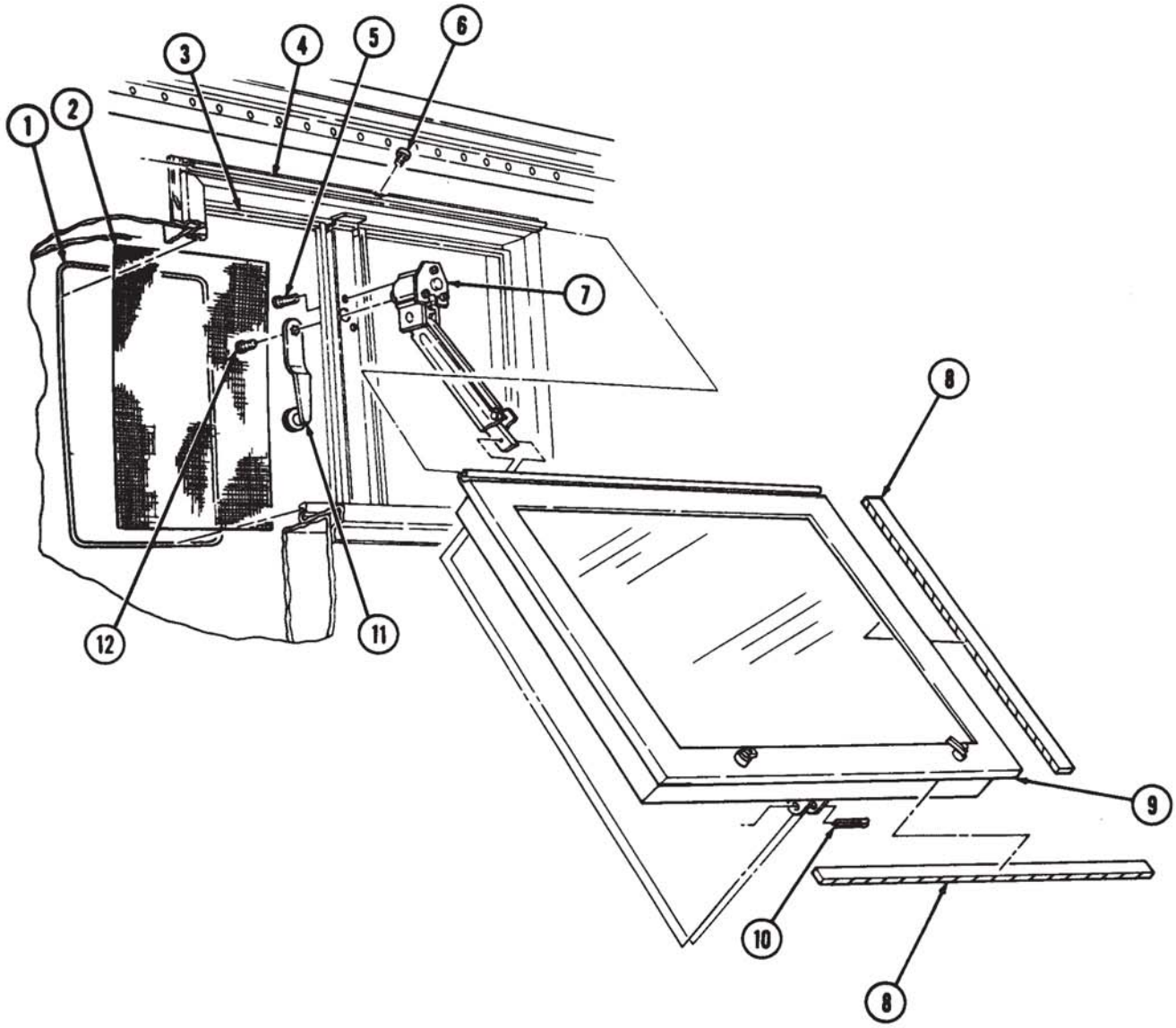

FOLLOW-ON TASKS: • Retract windows (TM 9-2320-260-10).
• Retract van body (TM 9-2320-260-10).

12-23. HINGED ROOF AND FLOOR COUNTERBALANCE CABLE REPLACEMENT

THIS TASK COVERS:

a. Removal **b. Installation**

INITIAL SETUP

APPLICABLE MODELS
M820, M820A1, M820A2

MATERIALS/PARTS
Three cotter pins

REFERENCES (TM)
TM 9-2320-260-10
TM 9-2320-260-20P

EQUIPMENT CONDITION
- Parking brake set (TM 9-2320-260-10).
- Van body fully expanded (TM 9-2320-260-10).
- End panels in full open position (TM 9-2320-260-10).

GENERAL SAFETY INSTRUCTIONS
Support hinged roof panel before removing counterbalance cable.

WARNING

Support hinged roof panel before removing counterbalance cable.
Failure to do so may cause injury to personnel.

1. Support hinged roof panel.
2. Remove cotter pin (1), clevis pin (3), and clevis (2) from vertical drop arm (4). Discard cotter pin (1).
3. Remove cotter pin (5), clevis pin (6), roller (8), and counterbalance cable (9) from roller bracket (7). Discard cotter pin (5).
4. Remove cotter pin (12), clevis pin (14), and roller (11) from counterbalance cable (9) and counterbalance arm (13). Discard cotter pin (12).
5. Remove turnbuckle (15) from turnbuckle eye (16).
6. Remove counterbalance cable (9) from two cable guides (10).

b. Installation

1. Position counterbalance cable (9) through two cable guides (10).
2. Install turnbuckle (15) on turnbuckle eye (16).
3. Install roller (11) over counterbalance cable (9) and on counterbalance arm (13) with clevis pin (14) and new cotter pin (12).
4. Position counterbalance cable (9) on roller (8) and install roller (8) on roller bracket (7) with clevis pin (6) and new cotter pin (5).
5. Install clevis (2) on vertical drop arm (4) with clevis pin (3) and new cotter pin (1).
6. Adjust turnbuckle (15) until counterbalance cable (9) is tight.
7. Remove hinged roof panel support.

12-23. HINGED ROOF AND FLOOR COUNTERBALANCE CABLE REPLACEMENT (Contd)

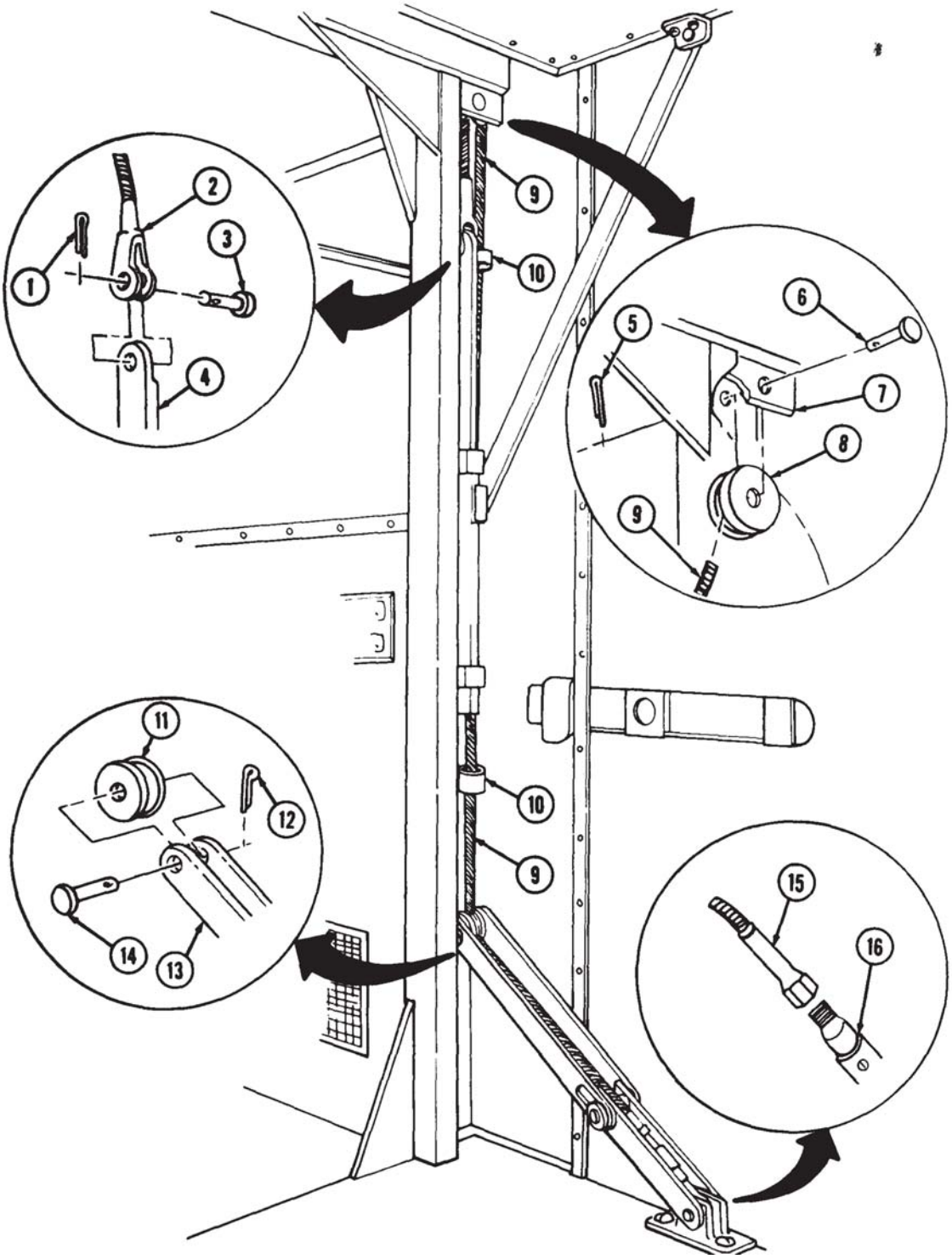

FOLLOW-ON TASKS: • Close end panels (TM 9-2320-260-10).
• Retract van body (TM 9-2320-260-10).

12-24. REAR DOOR LOCK REPLACEMENT

THIS TASK COVERS:

a. Removal **b. Installation**

INITIAL SETUP

APPLICABLE MODELS
M820, M820A1, M820A2

MATERIALS/PARTS
Two cotter pins

REFERENCES (TM)
TM 9-2320-260-10
TM 9-2320-260-20P

EQUIPMENT CONDITION
Parking brake set (TM 9-2320-260-10).

a. Removal

1. Remove pin (11) and handle (10) from lock (14).
2. Remove two cotter pins (9), rods (8), and washers (12) from lock (14). Discard cotter pins (9).
3. Remove six screws (4) and two covers (3) from door (1).
4. Remove two screws (6), washers (7), and latches (5) from two rods (8).
5. Remove four screws (15) and five shims (2) from door (1).
6. Remove four screws (13) and lock (14) from door (1).

b. Installation

1. Install lock (14) on door (1) with four screws (13).
2. Install five shims (2) on door (1) with four screws (15).
3. Install two latches (5) on rods (8) with two washers (7) and screws (6).
4. Install two covers (3) on door (1) with six screws (4).
5. Position latch (5) on upper rod (8) in cover (3), and install washer (12), rod (8), and new cotter pin (9) on lock (14).
6. Position latch (5) on lower rod (8) in cover (3), and install washer (12), rod (8), and new cotter pin (9) on lock (14).
7. Install handle (10) on lock (14) with pin (11).

12-24. REAR DOOR LOCK REPLACEMENT (Contd)

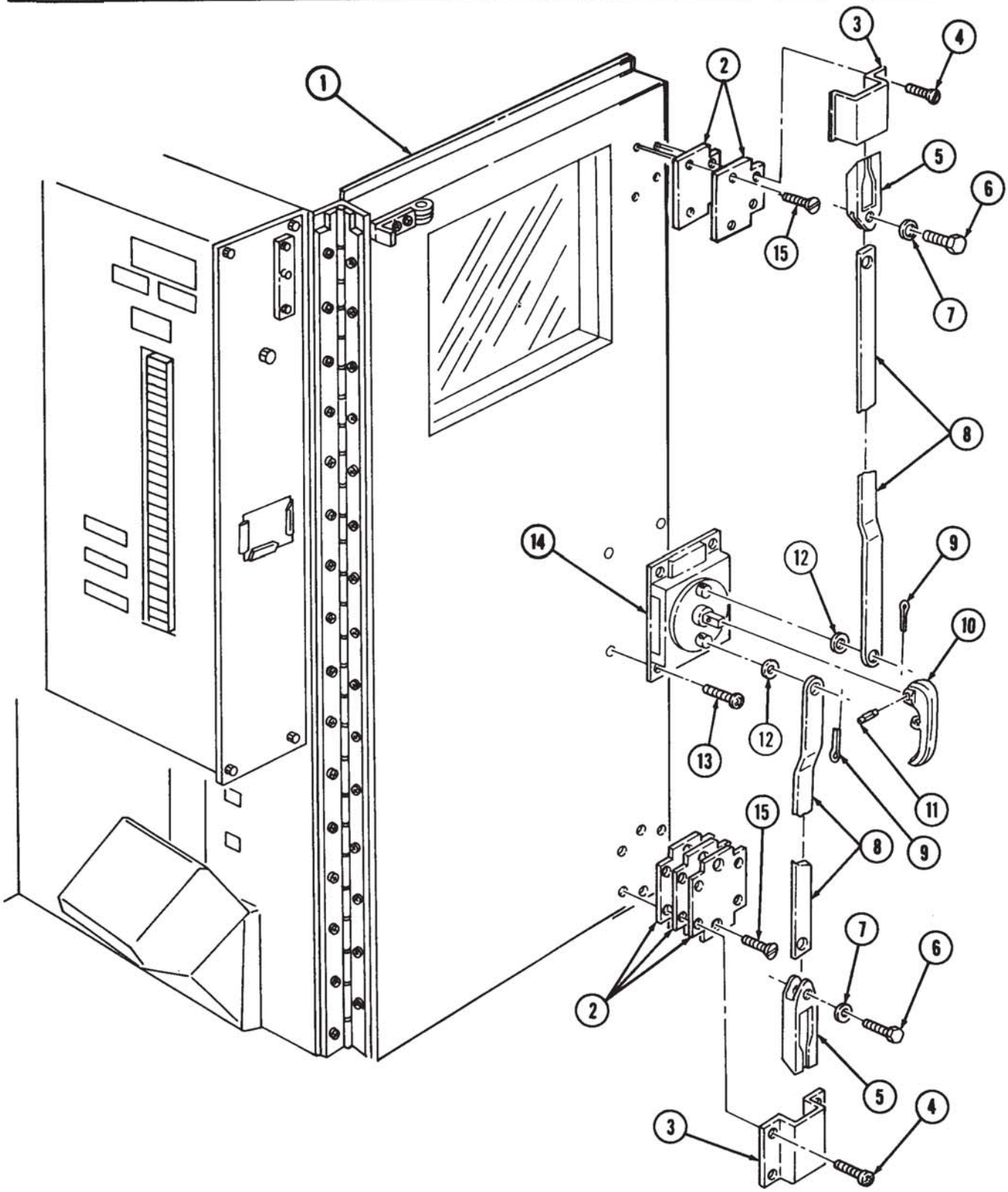

12-25. PANEL SEALS REPLACEMENT

THIS TASK COVERS:

a. Roof Panel Seals Removal
b. Floor Panel Seals Removal
c. Wall Panel Seals Removal
d. Side Panel Seals Removal
e. Side Panel Seals Installation
f. Wall Panel Seals Installation
g. Floor Panel Seak Installation
h. Roof Panel Seals Installation

INITIAL SETUP

APPLICABLE MODELS
M820, M820A1, M820A2

MATERIAIS/PARTS
Two hundred six rivets
Twenty-six seals
Four seal blocks
Adhesive (Appendix C, Item 2)

REFERENCES fTM)
TM 9-2320-260-10
TM 9-2320-260-20P

EQUIPMENT CONDITION
- Parking brake set (TM 9-2320-260-10).
- Van body side panels expanded (TM 9-2320-260-10).
- Roof and floor panels open (TM 9-2320-260-10).

NOTE

- The right and left roof, floor, side, and wall panel seals are replaced basically the same way.
- Remove seal remains and adhesive from all panels.

a. Roof Panel Seals Removal

1. Remove twenty-four rivets (9), two retainers (8), and seals (10) from roof panel (1). Discard rivets (9) and seals (10).
2. Remove seal (4) from roof panel (1). Discard seal (4).
3. Remove fifty-two rivets (7), retainer (6), and seal (5) from roof panel (1). Discard rivets (7) and seal (5).
4. Remove two seal blocks (2) and seals (3) from roof panel (1). Discard seals (3) and seal blocks (2).

b. Floor Panel Seals Removal

1. Remove thirty screws (15), two retainers (14), four seals (13), and two channels (12) from floor panel (11). Discard seals (13).
2. Remove forty-one rivets (17) and seal (16) from floor panel (11). Discard rivets (17) and seal (16).

12-25. PANEL SEALS REPLACEMENT (Contd)

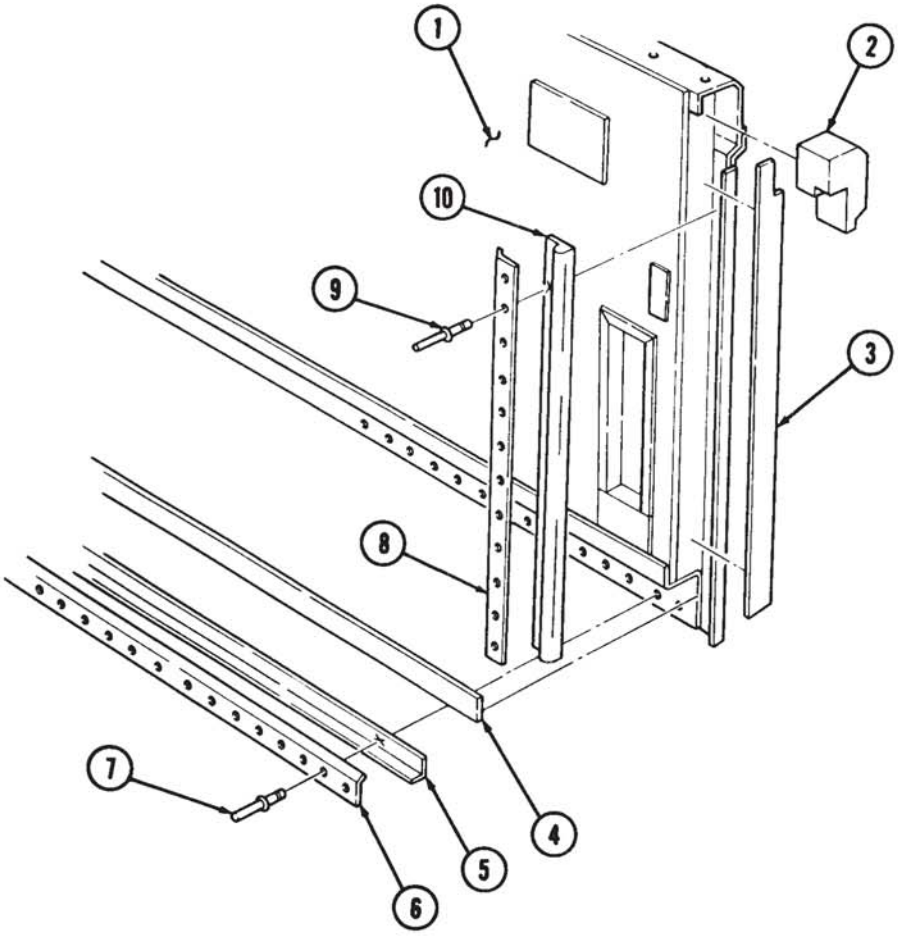

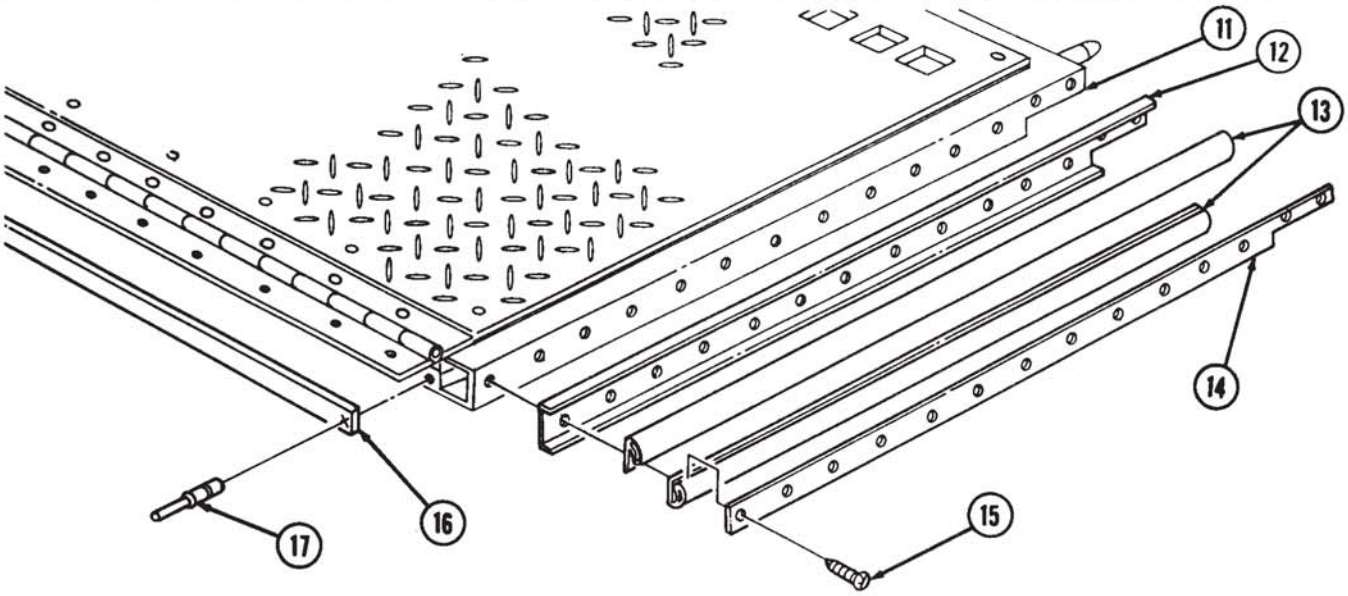

12-25. PANEL SEALS REPLACEMENT (Contd)

c. Wall Panel Seals Removal

Remove four screws (4), two retainers (5), seal blocks (3), spacers (6), seals (7), and channels (2) from front wall panel (1). Discard seal blocks (3) and seals (7).

d. Side Panel Seals Removal

1. Remove forty-two nuts (27), screws (13), two retainers (15), and seals (14) from side panel (8). Discard seals (14).
2. Remove eighty-nine rivets (10), retainer (11), and seal (12) from side panel (8). Discard rivets (10) and seal (12).
3. Remove sixty-nine screws (18), retainer (19), two seals (17), and channel (16) from side panel (8). Discard seals (17).
4. Remove six screws (21), three retainers (20), and seals (22) from side panel (8). Discard seals (22).
5. Remove fifty-nine screws (23), four retainers (24), and seals (25) from side panel (8). Discard seals (25).
6. Remove seal (9) from door frame (26). Discard seal (9).

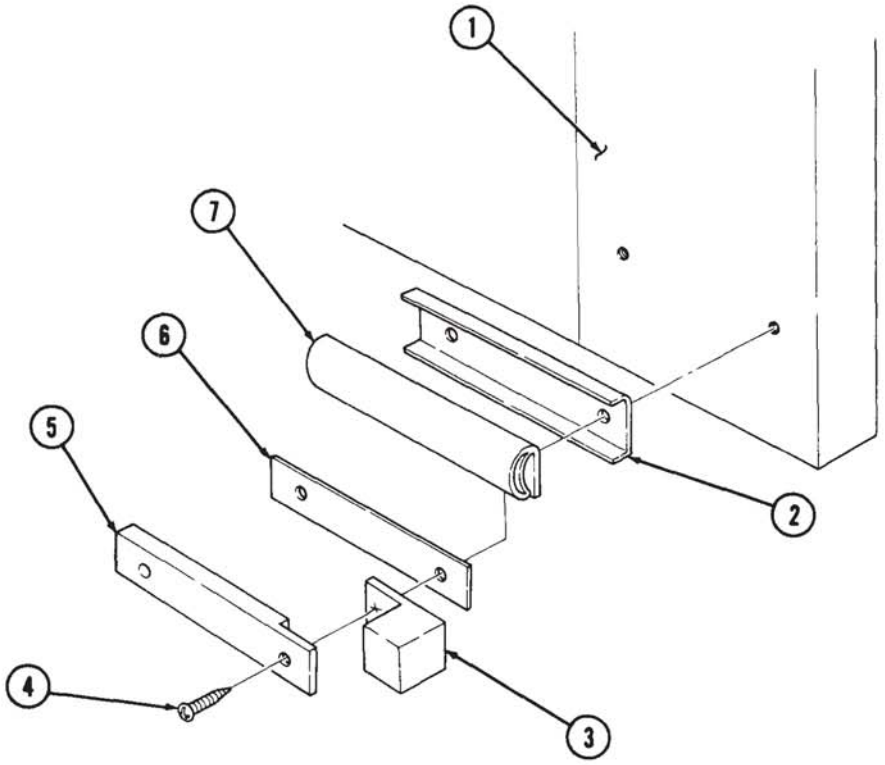

12-25. PANEL SEALS REPLACEMENT (Contd)

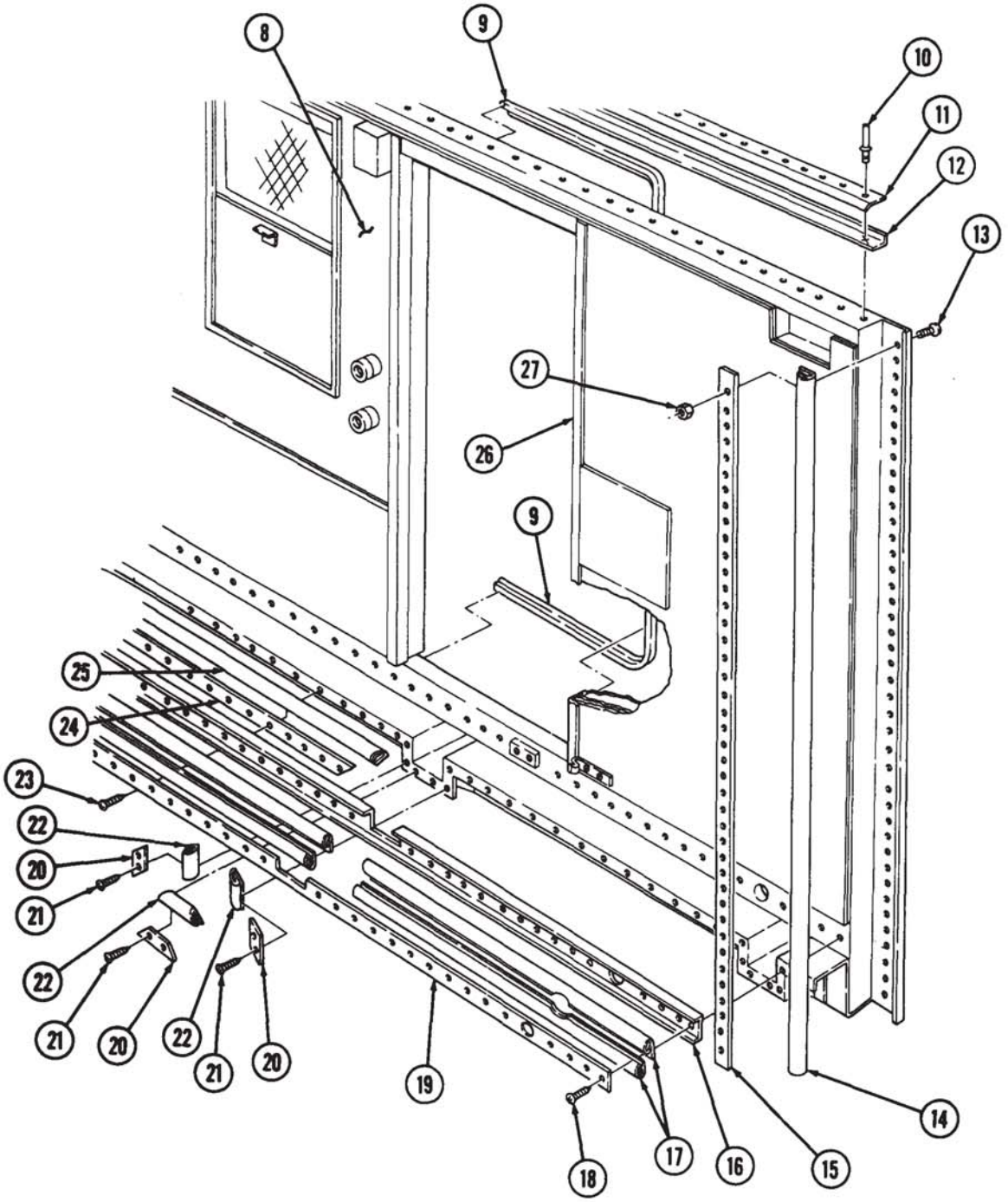

12-25. PANEL SEALS REPLACEMENT (Contd)

NOTE

Apply adhesive to all seals prior to installation.

e. Side Panel Seals Installation

1. Install new seal (1) on door frame (19).
2. Install four new seals (18) and retainers (17) on side panel (6) with fifty-nine screws (16).
3. Install three new seals (15) and retainers (13) on side panel (6) with six screws (14).
4. Install channel (9), two new seals (10), and retainer (12) on side panel (1) with sixty-nine screws (11).
5. Install new seal (4) and retainer (3) on side panel (6) with eighty-nine new rivets (2).
6. Install two new seals (7) and retainers (8) on side panel (6) with forty-two screws (5) and nuts (20).

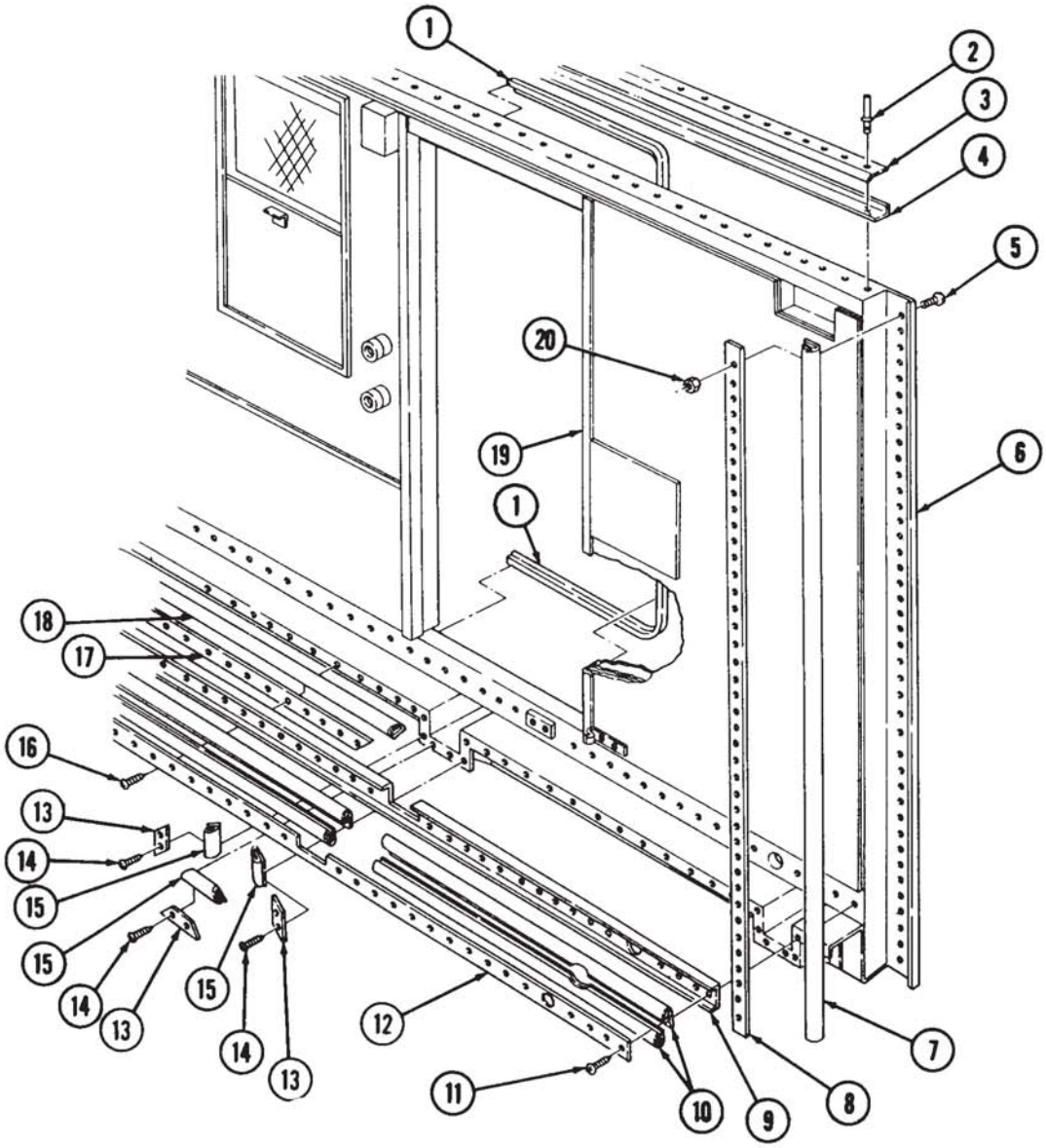

12-25. PANEL SEALS REPLACEMENT (Contd)

f. Wall Panel Seals Installation

Install two channels (22), new seals (27), spacers (26), new seal blocks (23), and retainers (25) on front wall panel (21) with four screws (24).

g. Floor Panel Seals Installation

1. Install new seal (43) on floor panel (38) with forty-one new rivets (44).
2. Install two channels (39), four new seals (40), and two retainers (41) on floor panel (38) with thirty screws (42).

h. Roof Panel Seals Installation

1. Install two new seals (30) and new seal blocks (29) on roof panel (28).
2. Install new seal (32) and retainer (33) on roof panel (28) with fifty-two new rivets (34).
3. Install new seal (31) on roof panel (28).
4. Install two new seals (37) and retainers (35) on roof panel (28) with twenty-four new rivets (36).

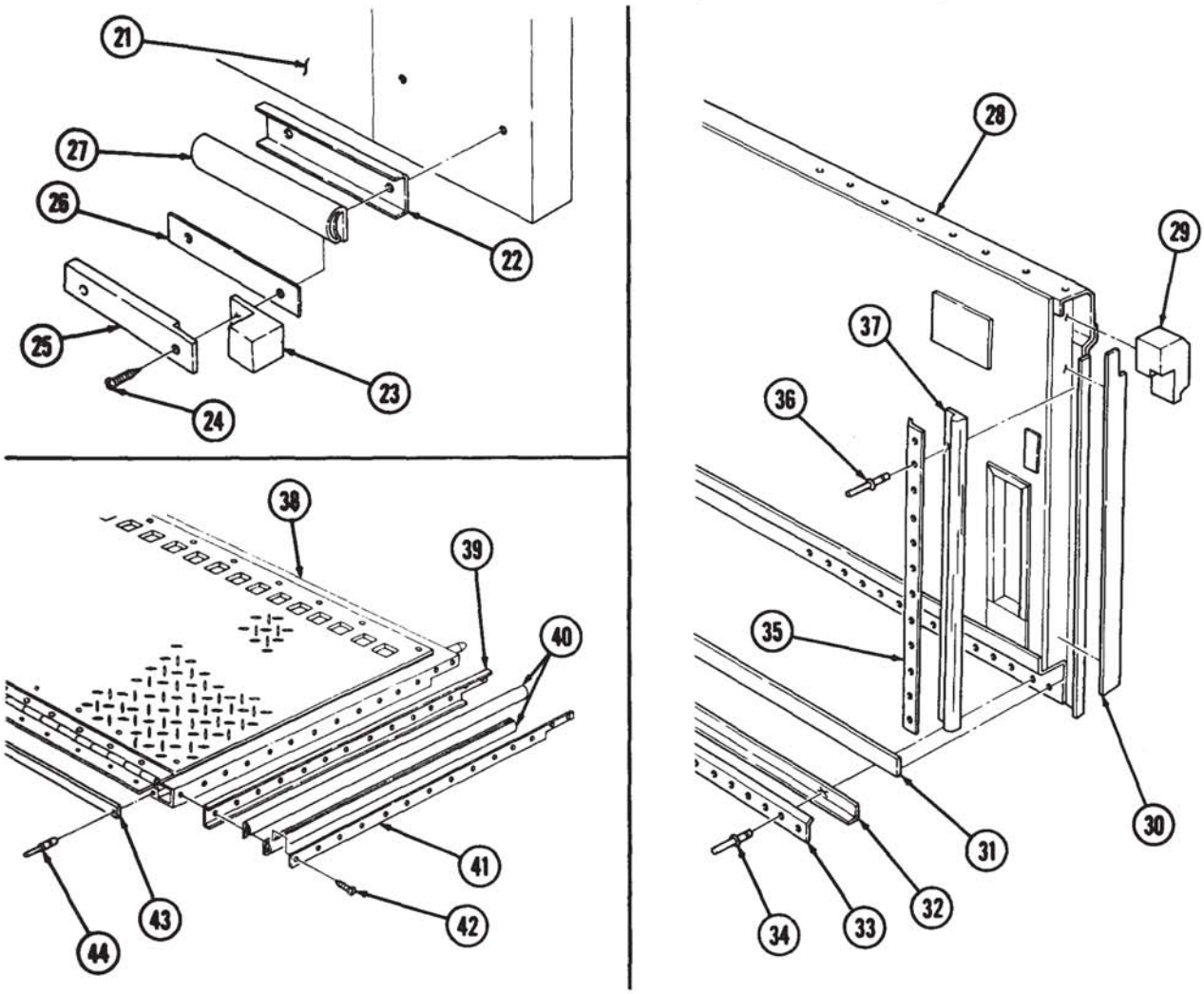

FOLLOW-ON TASKS: • Close roof and floor panels (TM 9-2320-260-10).
• Retract van body side panels (TM 9-2320-260-10).

12-26. SIDE PANEL LOCK REPLACEMENT

THIS TASK COVERS:

a. Removal **b. Installation**

INITIAL SETUP

APPLICABLE MODELS
M820, M820A1, M820A2

MATERIALS/PARTS
Four lockwashers
Two cotter pins

REFERENCES (TM)
TM 9-2320-260-10
TM 9-2320-260-20P

EQUIPMENT CONDITION
- Parking brake set (TM 9-2320-260-10).
- Van body side panels expanded (TM 9-2320-260-10).
- Side door opened (rear locks only) (TM 9-2320-260-10).

a. Removal

1. Remove eight screws (7) and plate (9) from side panel wall (17).
2. Remove cotter pins (1) and (19), clevis pins (6) and (10), and clevises (2) and (5) from two lock arms (11) and bars (3) and (8). Discard cotter pins (1) and (19).
3. Remove nut (13) and washer (12) from handle shank (20).
4. Remove four nuts (14), lockwashers (15), and lock (16) from wall panel (4). Discard lockwashers (15).
5. Remove two screws (21) and retainer (18) from side panel wall (17).

b. Installation

1. Install retainer (18) on side panel wall (17) with two screws (21).
2. Install lock (16) on wall panel (4) with four new lockwashers (15) and nuts (14).
3. Install washer (12) and nut (13) on handle shank (20).
4. Install clevises (2) and (5) on two lock arms (11) and bars (3) and (8) with clevis pins (6) and (10) and new cotter pins (1) and (19).
5. Install plate (9) on side wall panel (17) with eight screws (7).

12-26. SIDE PANEL LOCK REPLACEMENT (Contd)

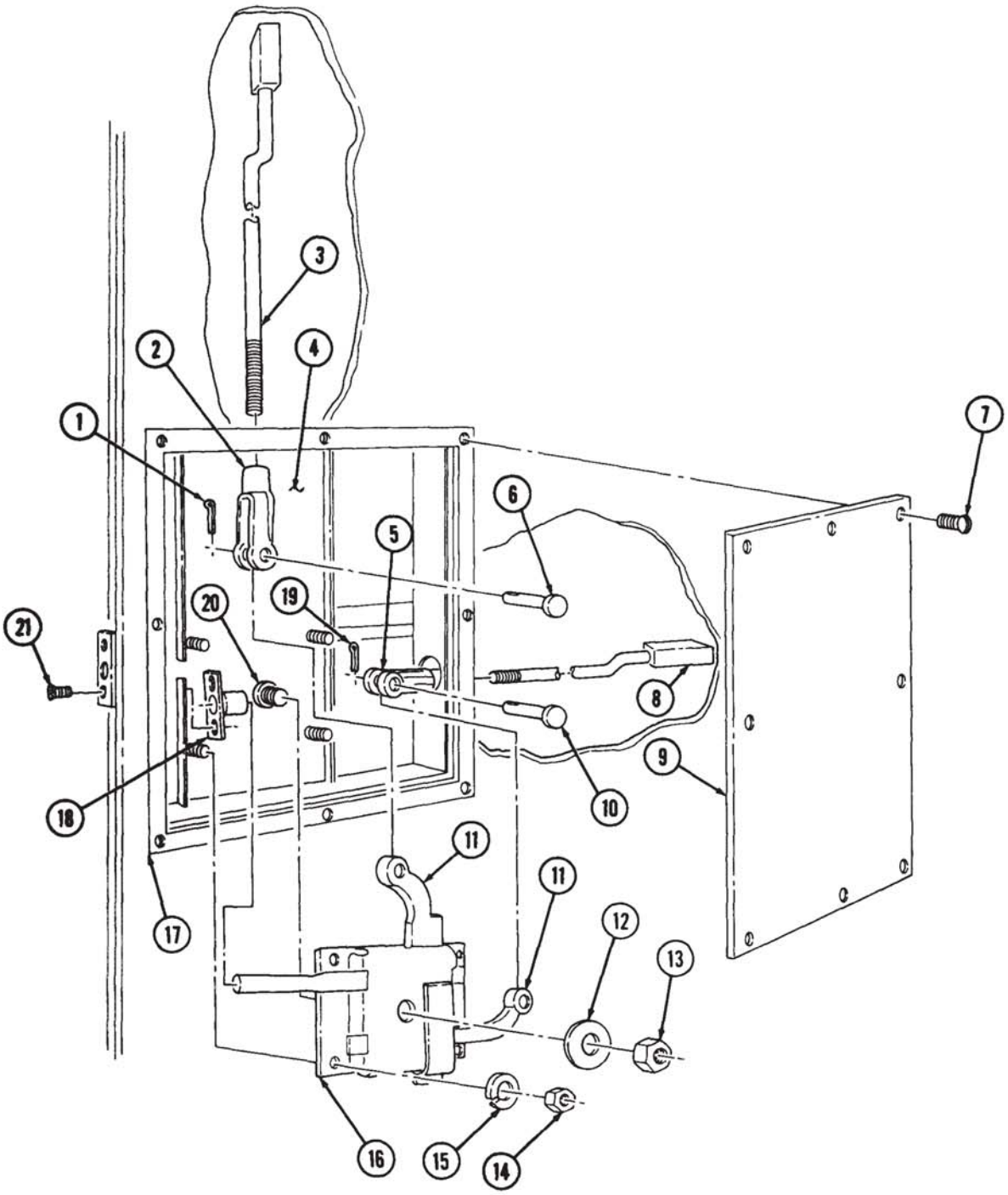

FOLLOW-ON TASKS: • Close side door (rear locks only) (TM 9-2320-260-10).
• Retract van body side panels (TM 9-2320-260-10).

12-27. HINGED ROOF PANEL LOCK REPLACEMENT

THIS TASK COVERS:

a. Removal **b. Installation**

INITIAL SETUP

APPLICABLE MODELS
M820, M820A1, M820A2

MATERIALS/PARTS
Three cotter pins
Locknut
Four lockwashers
Seal

REFERENCES (TM)
TM 9-2320-260-10
TM 9-2320-260-20P

EQUIPMENT CONDITION
- Parking brake set (TM 9-2320-260-10).
- Van body side panels expanded with roof and floor retracted (TM 9-2320-260-10).

a. Removal

1. Remove ten screws (10) and cover (11) from panel wall (15).
2. Remove two cotter pins (1), clevis pins (5), and clevises (4) from lock arms (6). Discard cotter pins (1).
3. Remove cotter pin (9), locknut (8), and washer (7) from shaft (2). Discard cotter pin (9) and locknut (8).
4. Remove four nuts (12), lockwashers (13), and lock (14) from support (3). Discard lockwashers (13).
5. Remove lock handle (20), two screws (19), plate (18), gasket (17), and seal (16) from panel wall (21). Discard seal (16).

b. Installation

1. Install new seal (16), gasket (17), and plate (18) on panel wall (21) with two screws (19).
2. Insert handle (20) through panel wall (21).
3. Install lock (14) on support (3) with four new lockwashers (13) and nuts (12).
4. Install washer (7), new locknut (8), and new cotter pin (9) on shaft (2).
5. Install two clevises (4) on lock arms (6) with two clevis pins (5) and new cotter pins (1).
6. Install cover (11) on panel wall (15) with ten screws (10).

12-27. HINGED ROOF PANEL LOCK REPLACEMENT (Contd)

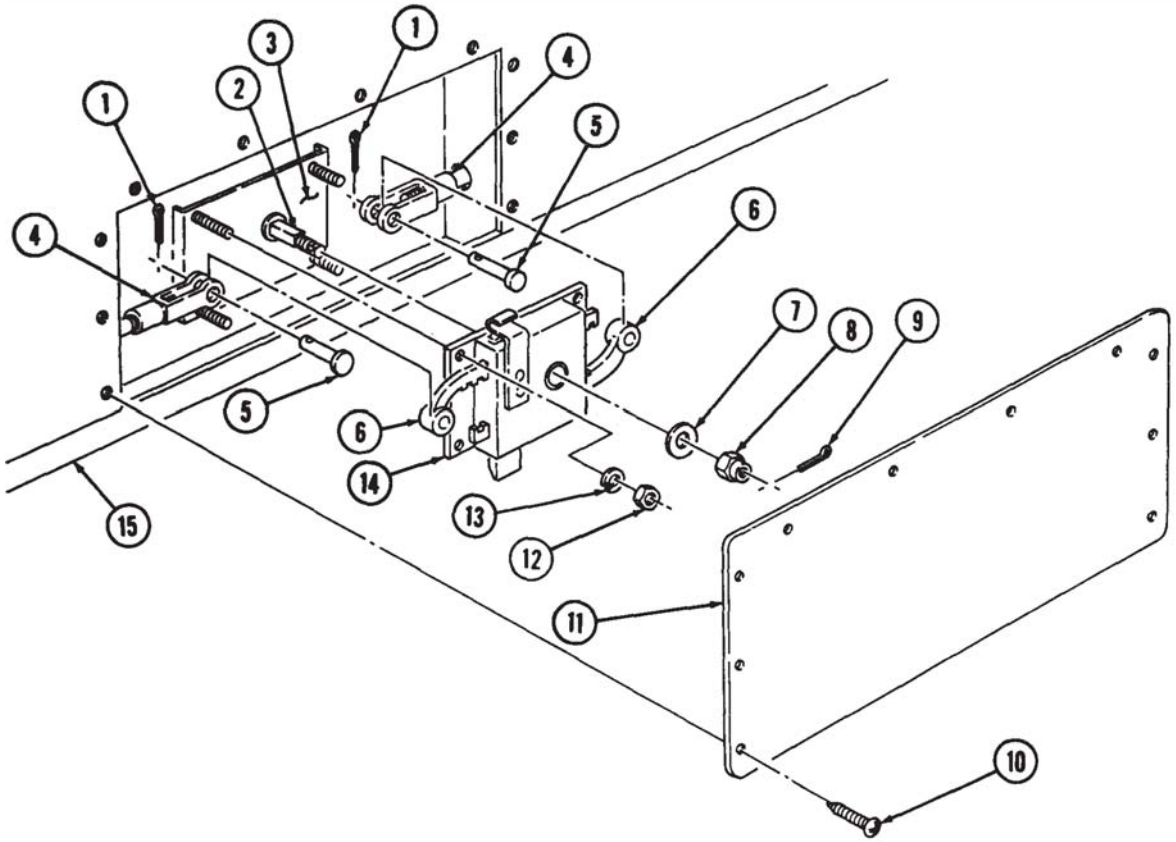

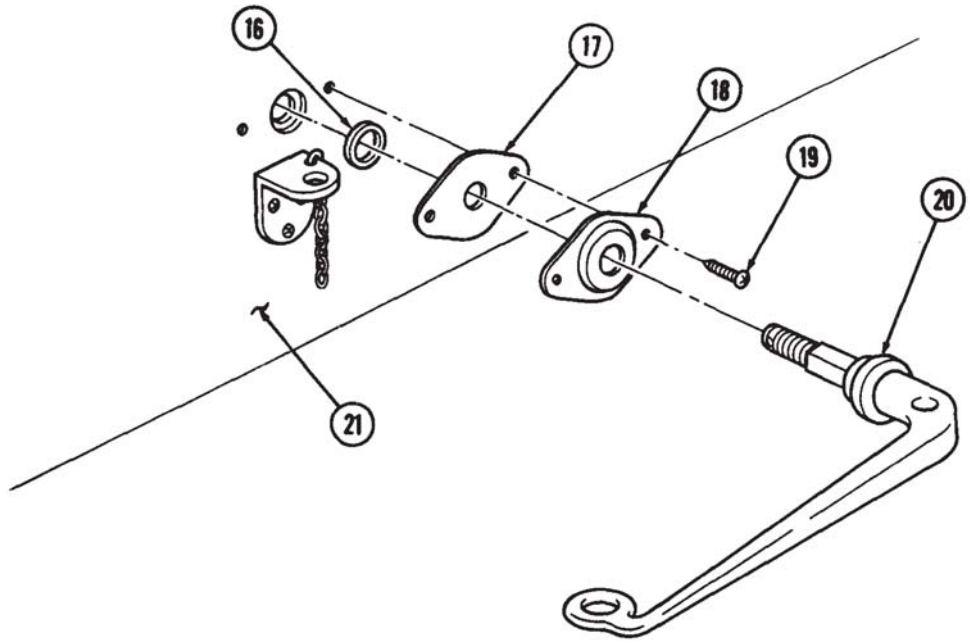

FOLLOW-ON TASK: Retract van body side panels (TM 9-2320-260-10).

12-28. REAR DOOR BLACKOUT SWITCH REPLACEMENT

THIS TASK COVERS:

a. Removal b. Installation

INITIAL SETUP

APPLICABLE MODELS
M820, M820A1, M820A2

REFERENCES (TM)
TM 9-2320-260-10
TM 9-2320-260-20P

EQUIPMENT CONDITION
- Parking brake set (TM 9-2320-260-10).
- Battery ground cable disconnected (para. 4-48).

NOTE

Tag all wires for installation.

a. Removal

1. Remove two screws (2), cover (4), and blackout switch (6) from load center (1).
2. Remove nut (8), two wires (7), and screw (5) from blackout switch (6).
3. Remove nut (3) and blackout switch (6) from cover (4).

b. Installation

1. Install blackout switch (6) on cover (4) with nut (3).
2. Install two wires (7) on blackout switch (6) with screw (5) and nut (8).
3. Install cover (4) and blackout switch (6) on load center (1) with two screws (2).

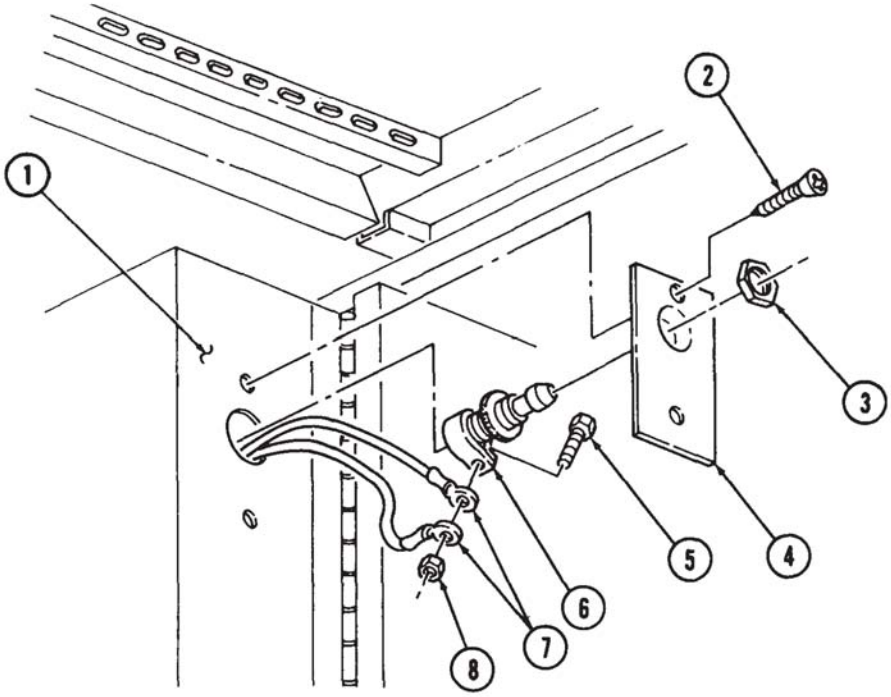

FOLLOW ON TASK: Connect battery ground cable (para. 4-48).

12-29. BLACKOUT SWITCH REPLACEMENT

THIS TASK COVERS:

a. Removal **b. Installation**

INITIAL SETUP

APPLICABLE MODELS
M820, M820A1, M820A2

REFERENCES (TM)
TM 9-2320-260-10
TM 9-2320-260-20P

EQUIPMENT CONDITION
- Parking brake set (TM 9-2320-260-10).
- Battery ground cable disconnected (para. 4-48).

NOTE

The blackout switch and emergency light switch are replaced the same way. This procedure covers the blackout switch only.

a. Removal

1. Remove two screws (7) and cover (1) from switch (2).
2. Remove two screws (6) and switch (2) from switch box (4).

NOTE

Tag all wires for installation.

3. Remove three screws (5) and wires (3) from switch (2).

b. Installation

1. Install three wires (3) on switch (2) with three screws (5).
2. Install switch (2) in switch box (4) with two screws (6).
3. Install cover (1) on switch (2) with two screws (7).

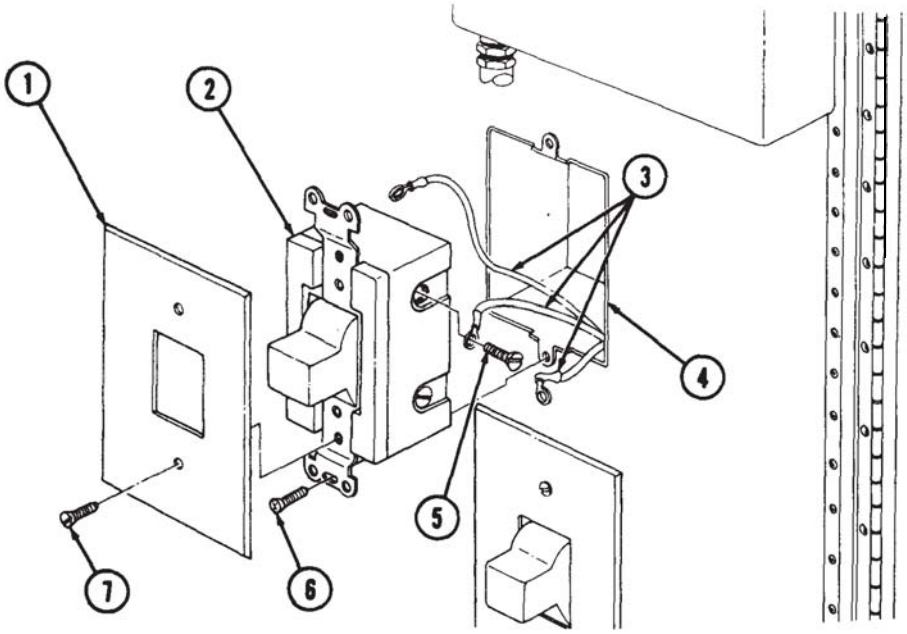

FOLLOW ON TASK: Connect battery ground cable (para. 4-48).

12-30. VAN BODY LIFTING BRACKETS REPLACEMENT

THIS TASK COVERS:

a. Removal **b. Installation**

INITIAL SETUP

APPLICABLE MODELS
All

MATERIALS/PARTS
Six lockwashers

REFERENCES (TM)
TM 9-2320-260-10
TM 9-2320-260-20P

EQUIPMENT CONDITION
Parking brake set (TM 9-2320-260-10).

NOTE

Left and right lifting brackets are replaced the same way. This procedure covers the left front and rear lifting brackets.

a. Removal

1. Remove two screws (9) and washers (8) from van bonnet (7) and open the van bonnet door (1).
2. Remove three nuts (3), lockwashers (4), screws (6), and front lifting bracket (5) from van body (2). Discard lockwashers (4).
3. Remove three screws (10), lockwashers (11), and rear lifting bracket (12) from van body (2). Discard lockwashers (11).

b. Installation

1. Install rear lifting bracket (12) on van body (2) with three new lockwashers (11) and screws (10).
2. Install front lifting bracket (5) on van body (2) with three screws (6), new lockwashers (4), and nuts (3).
3. Close van bonnet door (1) and secure door (1) to van bonnet (7) with two washers (8) and screws (9).

12-30. VAN BODY LIFTING BRACKETS REPLACEMENT (Contd)

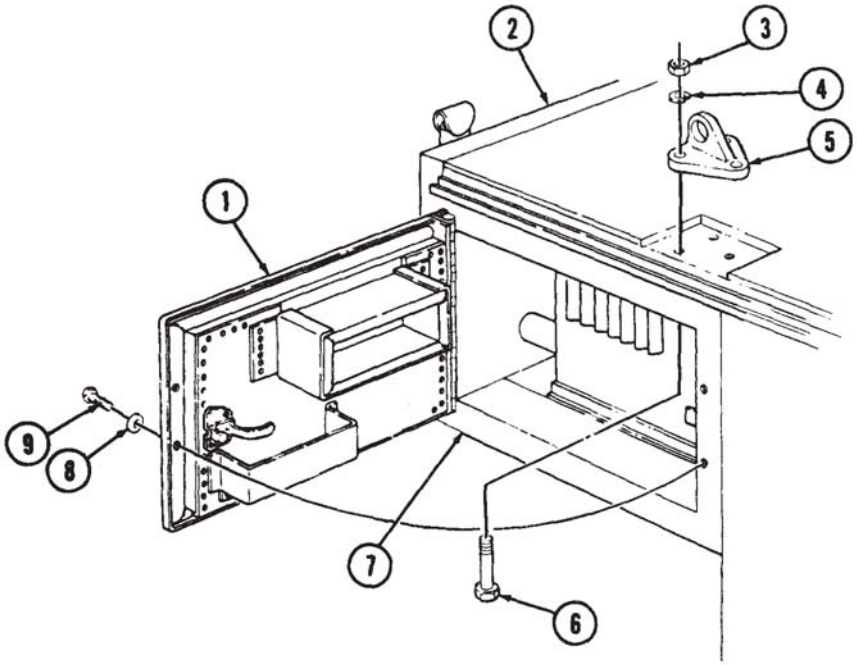

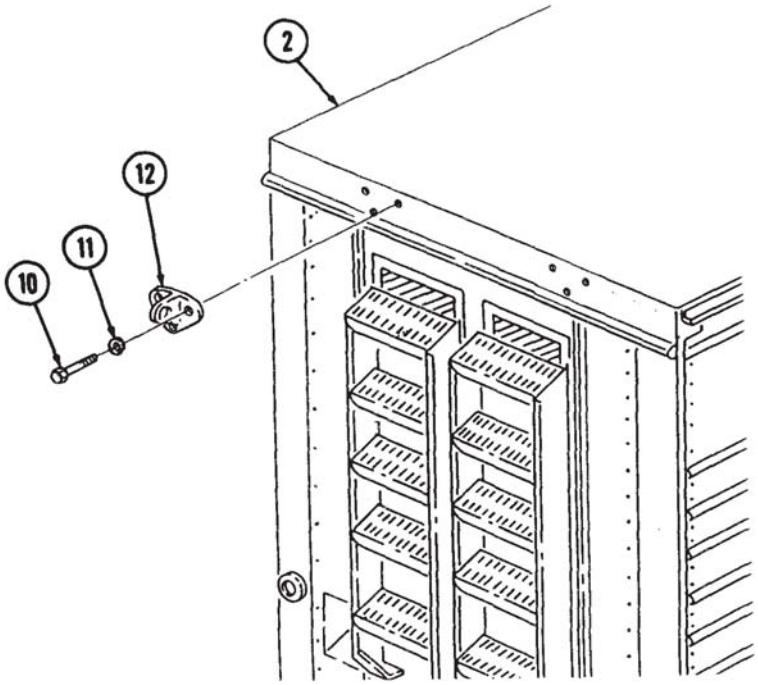

12-31. HINGED ROOF PANEL MAINTENANCE

THIS TASK COVERS:

a. Removal
b. Disassembly
c. Cleaning and Inspection
d. Assembly
e. Installation

INITIAL SETUP

APPLICABLE MODELS

M820, M820A1, M820A2

REFERENCES (TM)

TM 9-2320-260-10
TM 9-2320-260-20P

EQUIPMENT CONDITION

- Parking brake set (TM 9-2320-260-10).
- Van body sides fully expanded and secured (TM 9-2320-260-10).

GENERAL SAFETY INSTRUCTIONS

- All personnel must stand clear during lifting operations.
- Ensure lifting capacity is greater than weight of hinged roof.
- Gloves, eyeshields, and dust mask must be worn during hinged roof replacement.

WARNING

Van body is insulated with fibrous glass felt insulation. Gloves, eyeshields, and dust mask must be worn during hinged roof replacement. Failure to do so may result in injury to personnel.

NOTE

Left and right side hinged roofs are replaced the same. This procedure covers the right side hinged roof.

a. Removal

1. Attach two chains to lifting device and hinged roof (2) and remove slack from chains.
2. Remove four screws (4), two angle brackets (3), and holding rods (5) from hinged roof (2).

WARNING

- All personnel must stand clear during lifting operations. A swinging or shifting load may cause injury to personnel.
- Ensure lifting capacity is greater than weight (500 lb (227 kg)) of hinged roof. Failure to do so may result in injury to personnel.

NOTE

Assistant will help with step 3.

3. Remove sixty-nine screws (6) and hinged roof (2) from van body (1). Place hinged roof (2) on wooden supports.
4. Remove chains from lifting device and hinged roof (2).

12-31. HINGED ROOF PANEL MAINTENANCE (Contd)

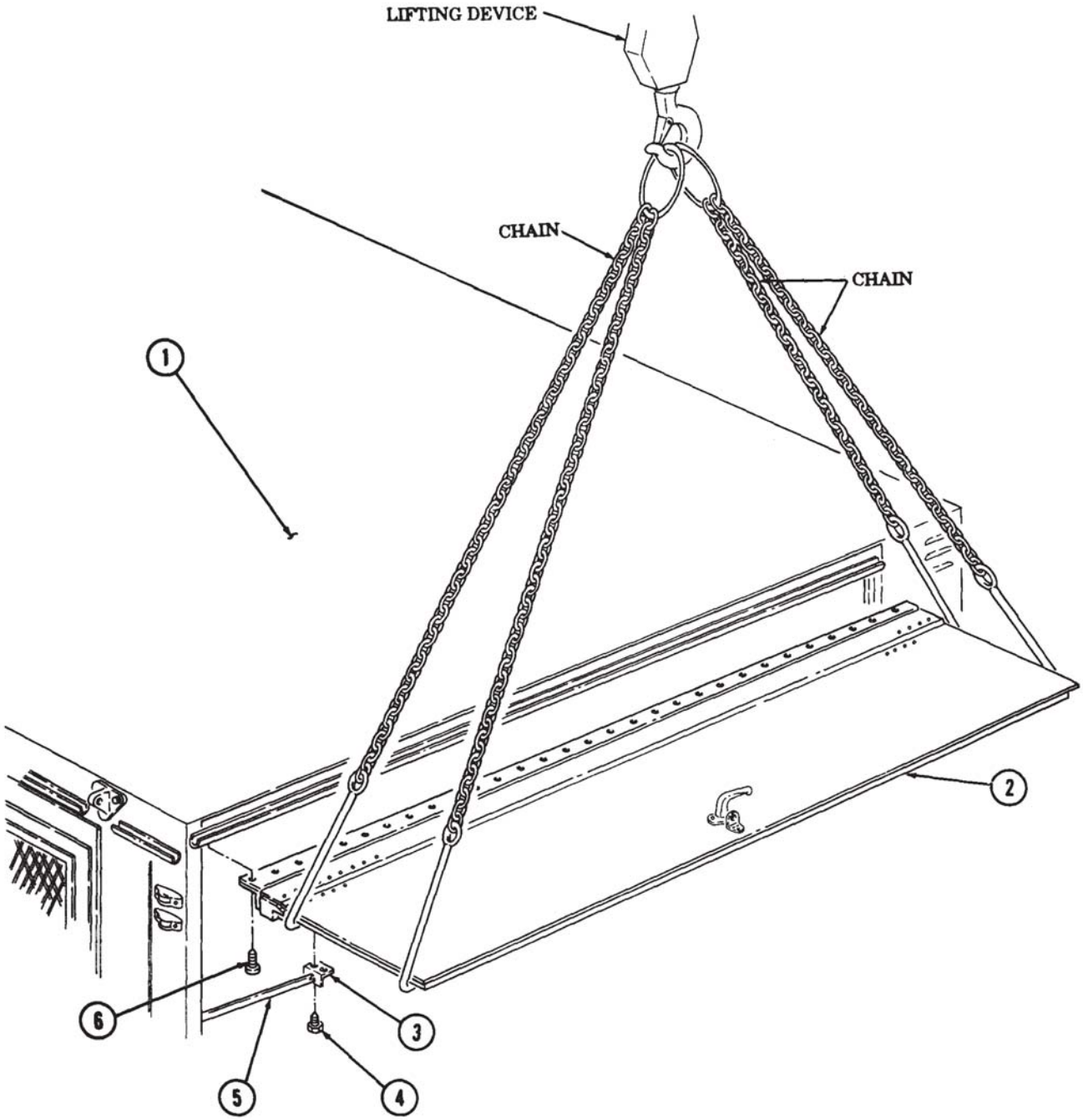

12-31. HINGED ROOF PANEL MAINTENANCE (Contd)

WARNING

Van body is insulated with fibrous glass felt insulation. Gloves, eyeshields, and dust mask must be worn during ceiling replacement. Failure to do so may result in injury to personnel.

1. Remove twelve screws (27) and three clamps (28) from hinged roof frame (1).
2. Remove six screws (25) and three holder assemblies (26) from hinged roof frame (1).
3. Remove thirty screws (5), three moldings (4), and moldings (6) and (7) from panels (2) and (18).
4. Remove four screws (11) and handle (12) from panel (2).
5. Remove ten screws (13) and cover (14) from panel (2).
6. Remove six screws (9) and plate (8) from panel (2).
7. Remove six screws (19) and three bars (20) from panels (2) and (18).
8. Remove six screws (21) and three fillers (22) from panels (2) and (18).
9. Remove two screws (15) and molding (16) from panels (2) and (18).
10. Remove moldings (3), (23), and (24) from panels (2) and (18).

NOTE

Assistant will help with steps 11 and 12.

11. Remove fifty-five screws (10) and panel (2) from hinged roof frame (1).
12. Remove forty-one screws (17) and panel (18) from hinged roof frame (1).

c. Cleaning and Inspection

WARNING

Drycleaning solvent is flammable and will not be used near open flame. Use only in well-ventilated places. Failure to do so may result in injury to personnel.

1. Wash all parts in drycleaning solvent and wipe dry with clean rag.
2. Inspect panels (2) and (18) for cracks and breaks. Replace part(s) if cracked or broken.
3. Inspect moldings (3), (4), (6), (7), (16), (23), and (24) for warpage and breaks. Replace part(s) if warped or broken.
4. Inspect plate (8), handle (12), cover (14), three bars (20), and fillers (22) for bends and breaks. Replace part(s) if bent or broken.
5. Inspect three clamps (28) and holders (26) for breaks and proper operation. Replace clamp(s) (28) or holder(s) (26) if broken or operating improperly.
6. Inspect frame (1) for breaks. Replace hinged roof if frame (1) is broken. Notify your supervisor.

12-31. HINGED ROOF PANEL MAINTENANCE (Contd)

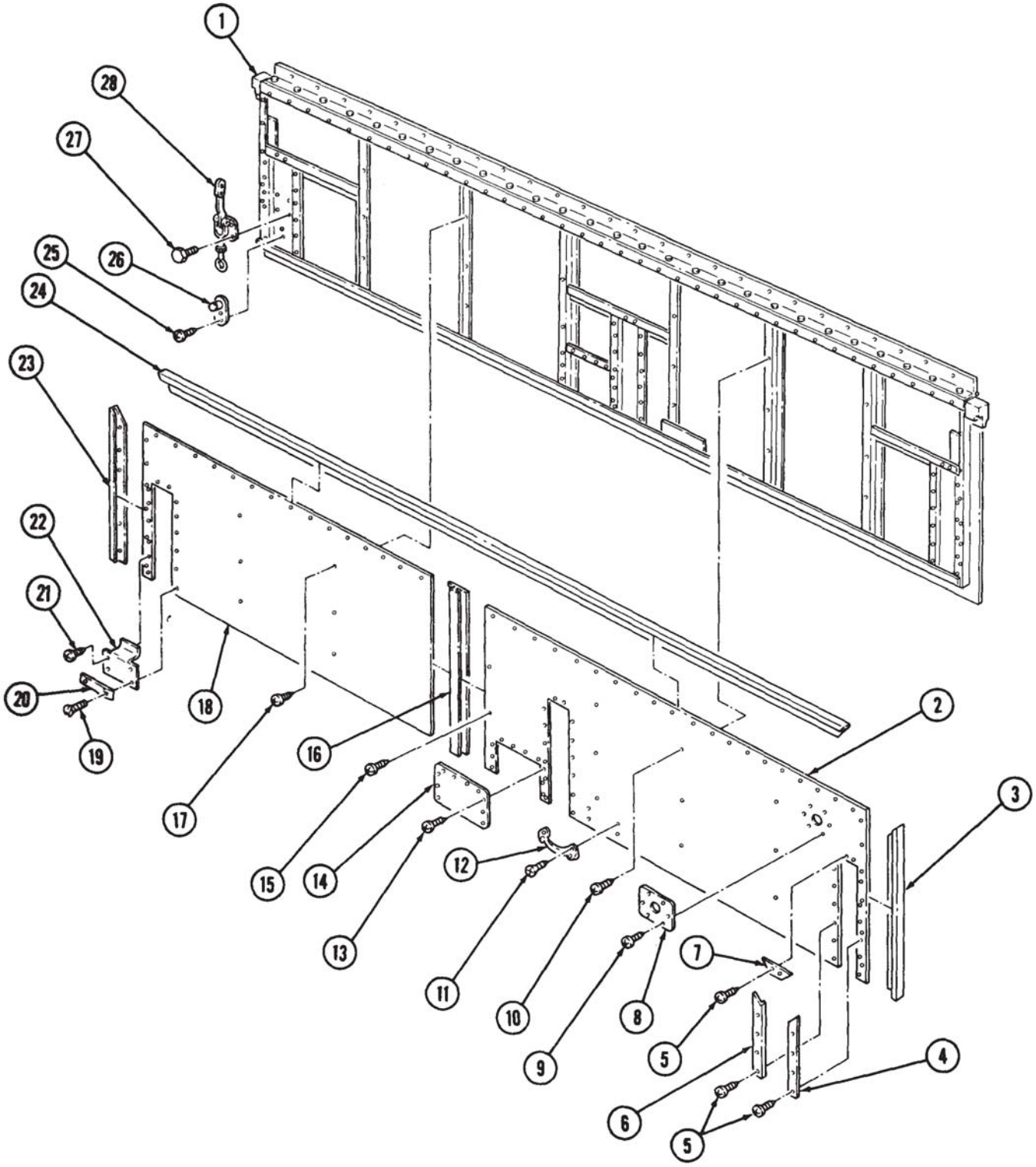

12-31. HINGED ROOF PANEL MAINTENANCE (Contd)

WARNING

Van body is insulated with fibrous class felt insulation. Gloves, eyeshields, and dust mask must be worn during hinged roof replacement. Failure to do so may result in inqury to personnel.

NOTE

- Insulate entire structure with fibrous glass felt insulation.
- Assistant will help with steps 1 and 2.

1. Install panel (18) on hinged roof frame (1) with forty-one screws (17).
2. Install panel (2) on hinged roof frame (1) with fifty-five screws (10).
3. Install molding (16) on panels (2) and (18) with two screws (15).
4. Install moldings (3), (23), and (24) on panels (2) and (18).
5. Install three fillers (22) on panels (2) and (18) with six screws (21).
6. Install three bars (20) on fillers (22) with six screws (19).
7. Install plate (8) on panel (2) with six screws (9).
8. Install cover (14) on panel (2) with ten screws (13).
9. Install handle (12) on panel (2) with four screws (11).
10. Install three moldings (4), and moldings (6) and (7) on panels (2) and (18) with thirty screws (5).
11. Install three holders (26) on hinged roof frame (1) with six screws (25).
12. Install three clamps (28) on hinged roof frame (1) with twelve screws (27).

1. Attach two chains to lifting device and hinged roof (30).

WARNING

- All personnel must stand clear during lifting operations. A swinging or shifting load may cause injury to personnel.
- Ensure lifting capacity is greater than weight (500 lb (227 kg)) of hinged roof. Failure to do so may result in injury to personnel.

NOTE

Assistant will help with step 2.

2. Lift hinged roof (30) from wooden supports and install on van body (29) with sixty-nine screws (34).
3. Install hinged roof (30) on two holding rods (33) and angle brackets (31) with four screws (32).
4. Remove chains from lifting device and hinged roof (30).

12-31. HINGED ROOF PANELS MAINTENANCE (Contd)

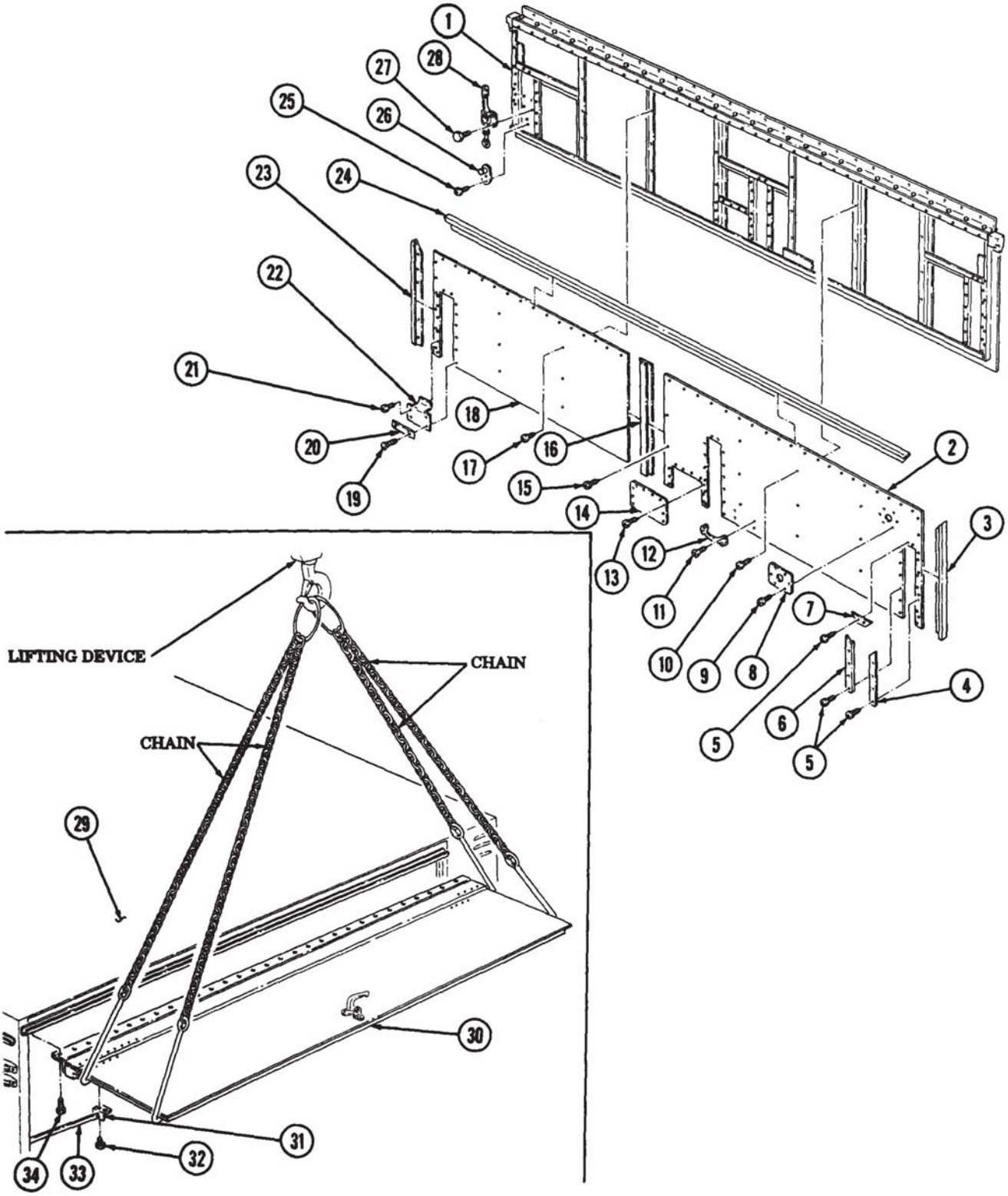

FOLLOW-ON TASK: Retract van body sides (TM 9-2320-260-10).

12-32. VAN TELEPHONE JACK REPLACEMENT

THIS TASK COVERS:

a. Removal **b. Installation**

INITIAL SETUP

APPLICABLE MODELS
M820, M820A1, M820A2

EQUIPMENT CONDITION
Parking brake set (TM 9-2320-260-10).

REFERENCES (TM)
TM 9-2320-260-10
TM 9-2320-260-20P

a. Removal

NOTE

Interior and exterior phone jacks are replaced the same way. This procedure covers the interior phone jack only.

1. Remove four screws (3) and junction box (2) from rear wall (1).
2. Remove screw (9) and leads (8) and (7) from junction box (2).
3. Remove nut (6), jack (5), and spacer (4) from junction box (2).

b. Installation

1. Install jack (5) on junction box (2) with spacer (4) and nut (6).
2. Install leads (7) and (8) on junction box (2) with screw (9).
3. Install junction box (2) on rear wall (1) with four screws (3).

12-32. VAN TELEPHONE JACK REPLACEMENT (Contd)

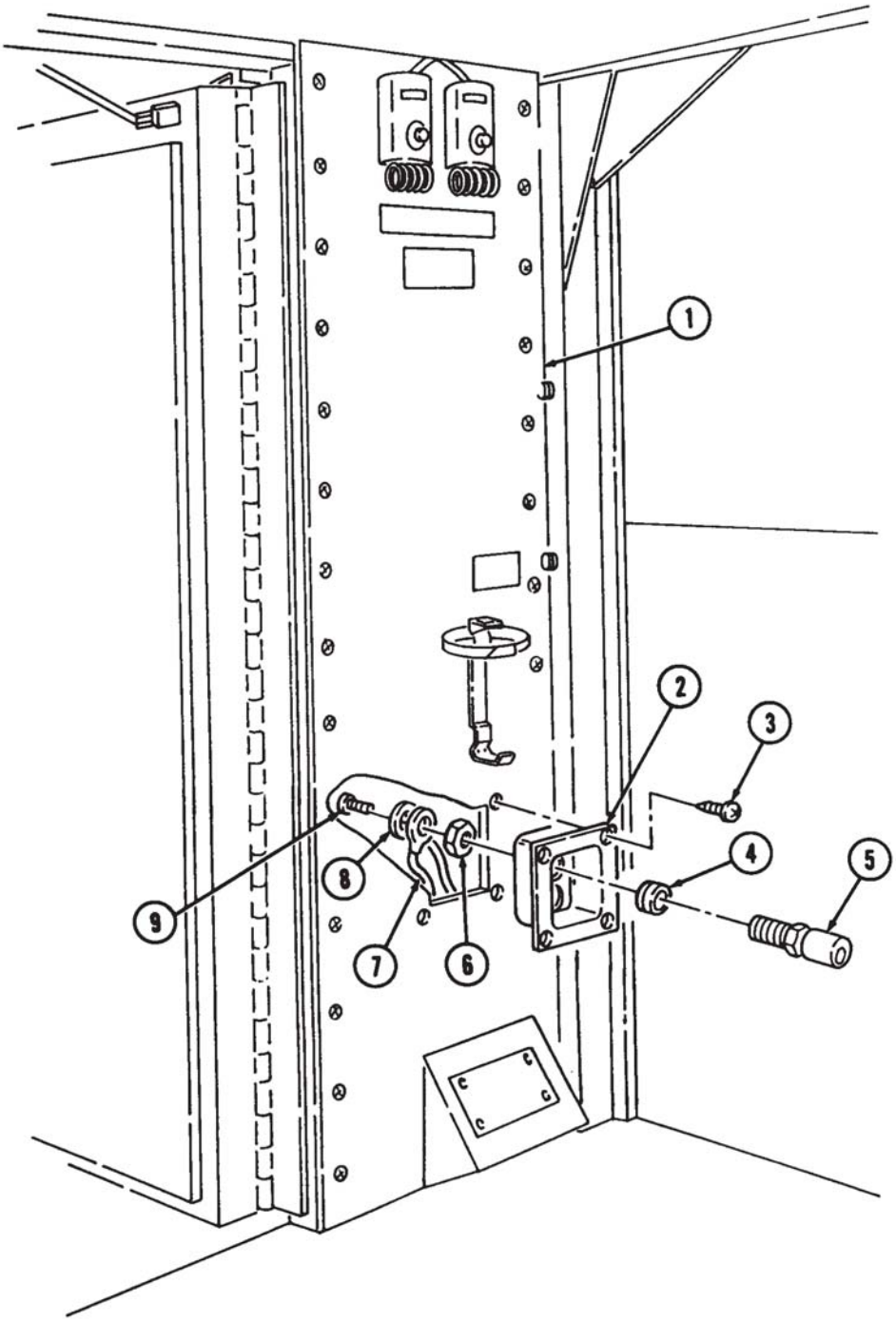

12-33. THERMOSTATIC SWITCH AND FLUORESCENT STARTER REPLACEMENT

THIS TASK COVERS:

a. Fluorescent Starter Removal
b. Fluorescent Starter Installation
c. Van Heater Thermostat Removal
d. Van Heater Thermostat Installation
e. Electrical Heater Thermostat Removal
f. Electrical Heater Thermostat Installation

INITIAL SETUP

APPLICABLE MODELS
M820, M820A1, M820A2

MATERIALS/PARTS
Fifteen wire splices

REFERENCES (TM)
TM 9-2320-260-10
TM 9-2320-260-20P

EQUIPMENT CONDITION
- Parking brake set (TM 9-2320-260-10)
- Battery ground cable disconnected (para. 4-48).

a. Fluorescent Starter Removal

NOTE

Tag all electrical leads and harnesses for installation.

1. Remove fluorescent starter covers (7) and (8) from switch boxes (1) and (10).
2. Disconnect six insulated wires (5) from wire splices (4). Discard wire splices (4).
3. Disconnect six wire splices (4) from six wiring harness leads (2).
4. Disconnect six insulated wires (6) from wire splices (3). Discard wire splices (3).
5. Disconnect six wire splices (3) from six wiring harness leads (9).
6. Remove two nuts (12) from connectors (18).
7. Remove four screws (11) and (16) and fluorescent starter switch boxes (1) and (10) from van body (17).
8. Remove two nuts (13) and (15) from connectors (14).

b. Fluorescent Starter Installation

1. Install two connectors (14) on fluorescent switch boxes (1) and (10) with two nuts (13) and (15).
2. Install two fluorescent starter boxes (1) and (10) on two connectors (18) with two nuts (12).
3. Install two fluorescent starter boxes (1) and (10) on van body (17) with four screws (11) and (16).
4. Install six wire splices (3) on six wire harness leads (9).
5. Connect six insulated wires (6) with new wire splices (3).
6. Install six wire splices (4) on six wire harness leads (2).
7. Connect six insulated wires (5) with new wire splices (4).
8. Install fluorescent starter covers (2) and (8) on switch boxes (1) and (10).

12-33. THERMOSTATIC SWITCH AND FLUORESCENT STARTER REPLACEMENT (Contd)

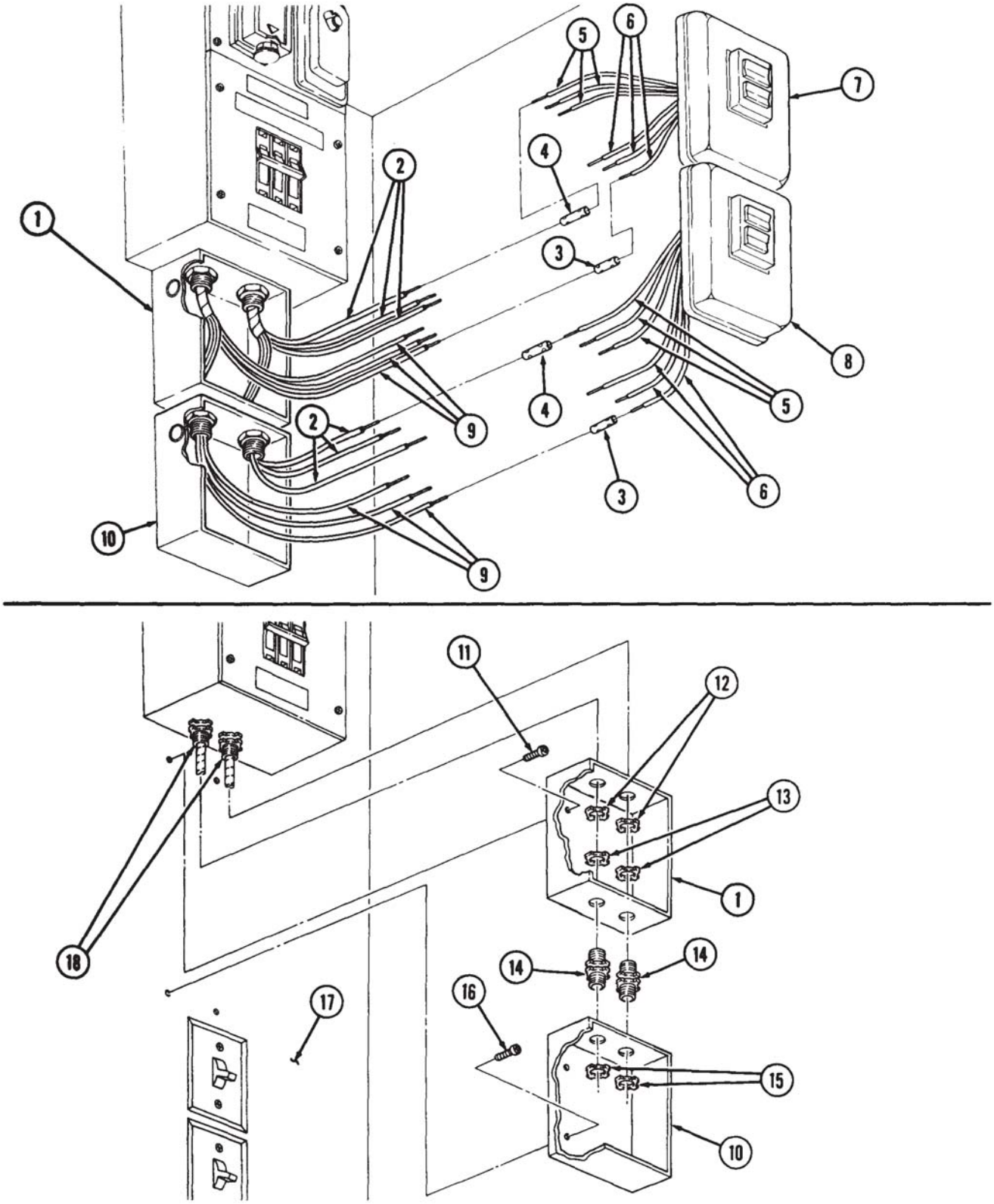

12-33. THERMOSTATIC SWITCH AND FLUORESCENT STARTER REPLACEMENT (Contd)

c. Van Heater Thermostat Removal

NOTE

Tag all electrical leads and harnesses for installation.

1. Remove thermostat cover (5) from van heater thermostat (6).
2. Remove two screws (4) and van heater thermostat (6) from upper cover (1).
3. Remove two screws (2) and wires (3) from van heater thermostat (6).

d. Van Heater Thermostat Installation

1. Install two wires (3) on van heater thermostat (6) with two screws (2).
2. Install van heater thermostat (6) on upper cover (1) with two screws (4).
3. Install thermostat cover (5) on van heater thermostat (6).

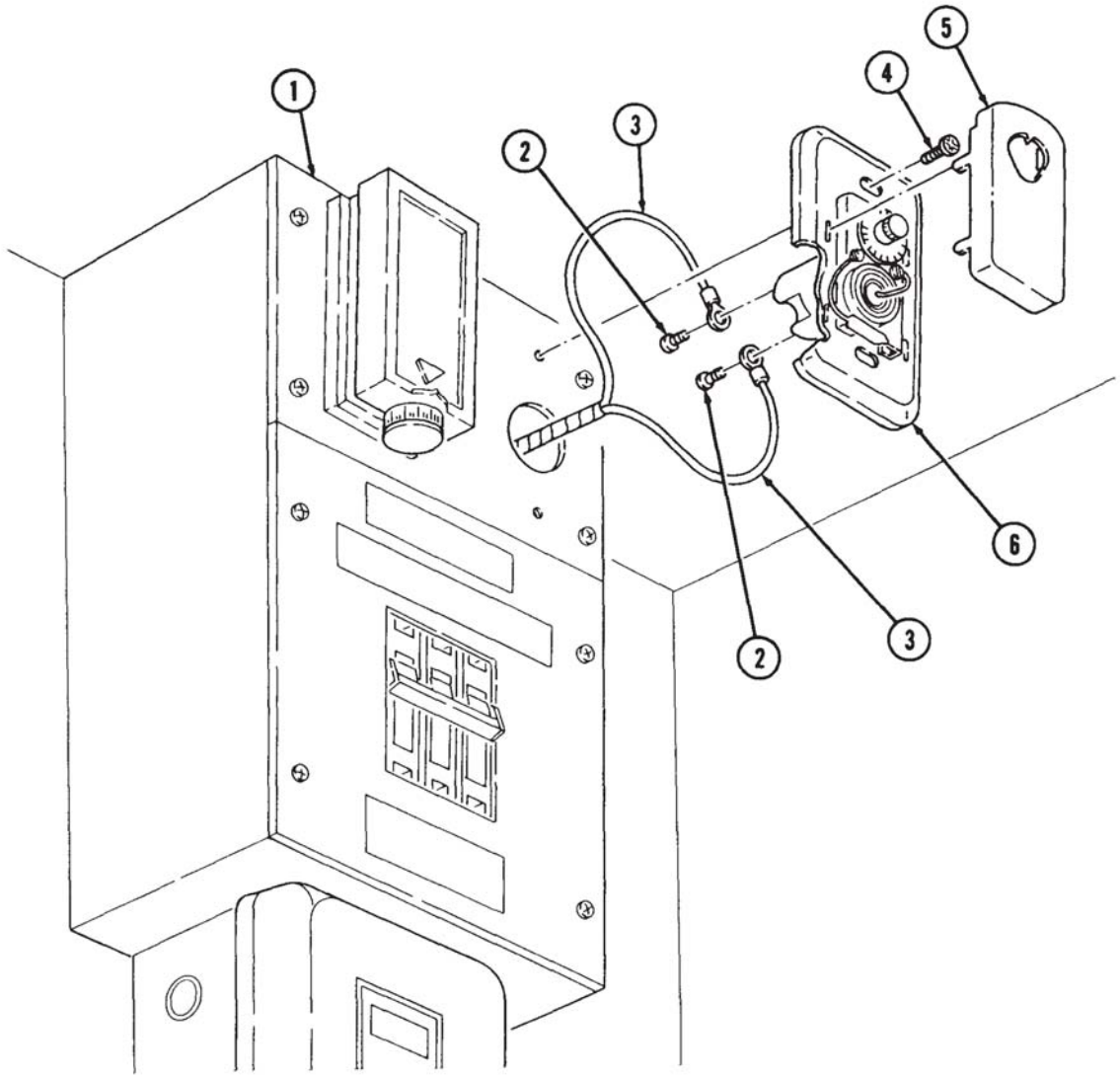

12-33. THERMOSTATIC SWITCH AND FLUORESCENT STARTER REPLACEMENT (Contd)

e. Electrical Heater Thermostat Removal

NOTE

Tag all electrical leads and harnesses for installation.

1. Remove thermostat cover (12) from electrical heater thermostat (10).
2. Remove two screws (11) and electrical heater thermostat (10) from upper cover (1).
3. Remove three wire splices (8) from wiring harness (7) and four wires (9). Discard wire splices (8).

f. Electrical Heater Thermostat Installation

1. Install three new wire splices (8) on wiring harness (7) and four wires (9).
2. Install electrical heater thermostat (10) on upper cover (1) with two screws (11).
3. Install thermostat cover (12) on electrical heater thermostat (10).

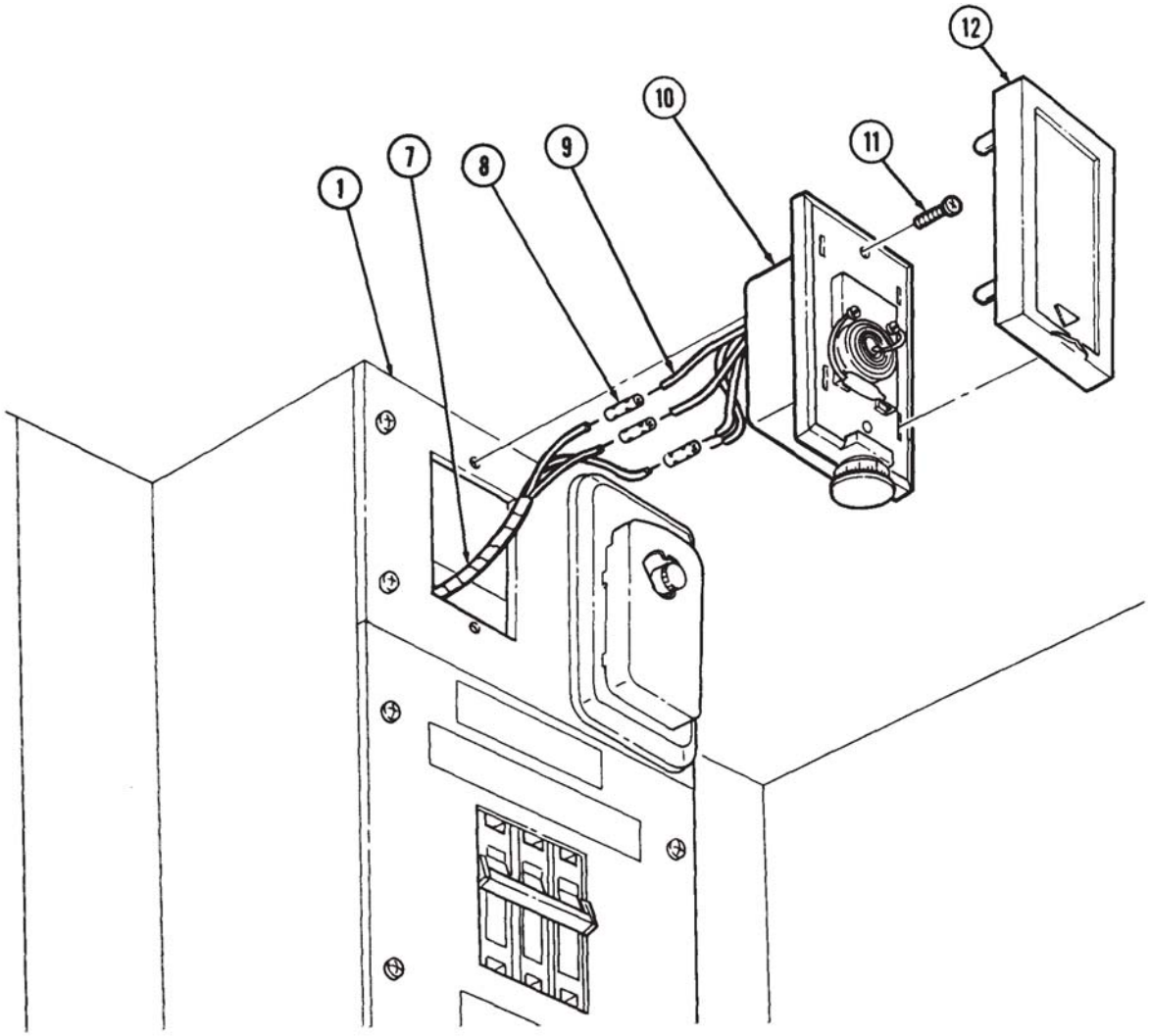

FOLLOW-ON TASK: Connect battery ground cable (para. 4-48).

12-34. 3-PHASE AND 400 HZ RECEPTACLES REPLACEMENT

THIS TASK COVERS:

a. 3-Phase Receptacle Removal
b. 400 Hz Receptacle Removal
c. 3-Phase Receptacle Installation
d. 400 Hz Receptacle Installation

INITIAL SETUP

APPLICABLE MODELS
M820, M820A1, M820A2

REFERENCES (TM)
TM 9-2320-260-10
TM 9-2320-260-20P

EQUIPMENT CONDITION
- Parking brake set (TM 9-2320-260-10).
- Battery ground cable disconnected (para. 4-48).

NOTE

Tag all wires for installation.

a. 3-Phase Receptacle Removal

1. Remove two screws (4) and cover (3) from receptacle (5).
2. Remove two screws (2) and receptacle (5) from receptacle box (1).
3. Remove four screws (6) and wires (7) from receptacle (5).

b. 400 Hz Receptacle Removal

NOTE

Tag all wires for installation.

1. Remove screw (11) and cover (10) from receptacle (12).
2. Remove two screws (9) and receptacle (12) from receptacle box (8).
3. Remove three screws (13) and wires (14) from receptacle (12).

c. 3-Phase Receptacle Installation

1. Install four wires (7) on receptacle (5) with four screws (6).
2. Install receptacle (5) on receptacle box (1) with two screws (2).
3. Install cover (3) on receptacle (5) with two screws (4).

d. 400 Hz Receptacle Installation

1. Install three wires (14) on receptacle (12) with three screws (13).
2. Install receptacle (12) on receptacle box (8) with two screws (9).
3. Install cover (10) on receptacle (12) with screw (11).

12-34. 3-PHASE AND 400 HZ RECEPTACLES REPLACEMENT (Contd)

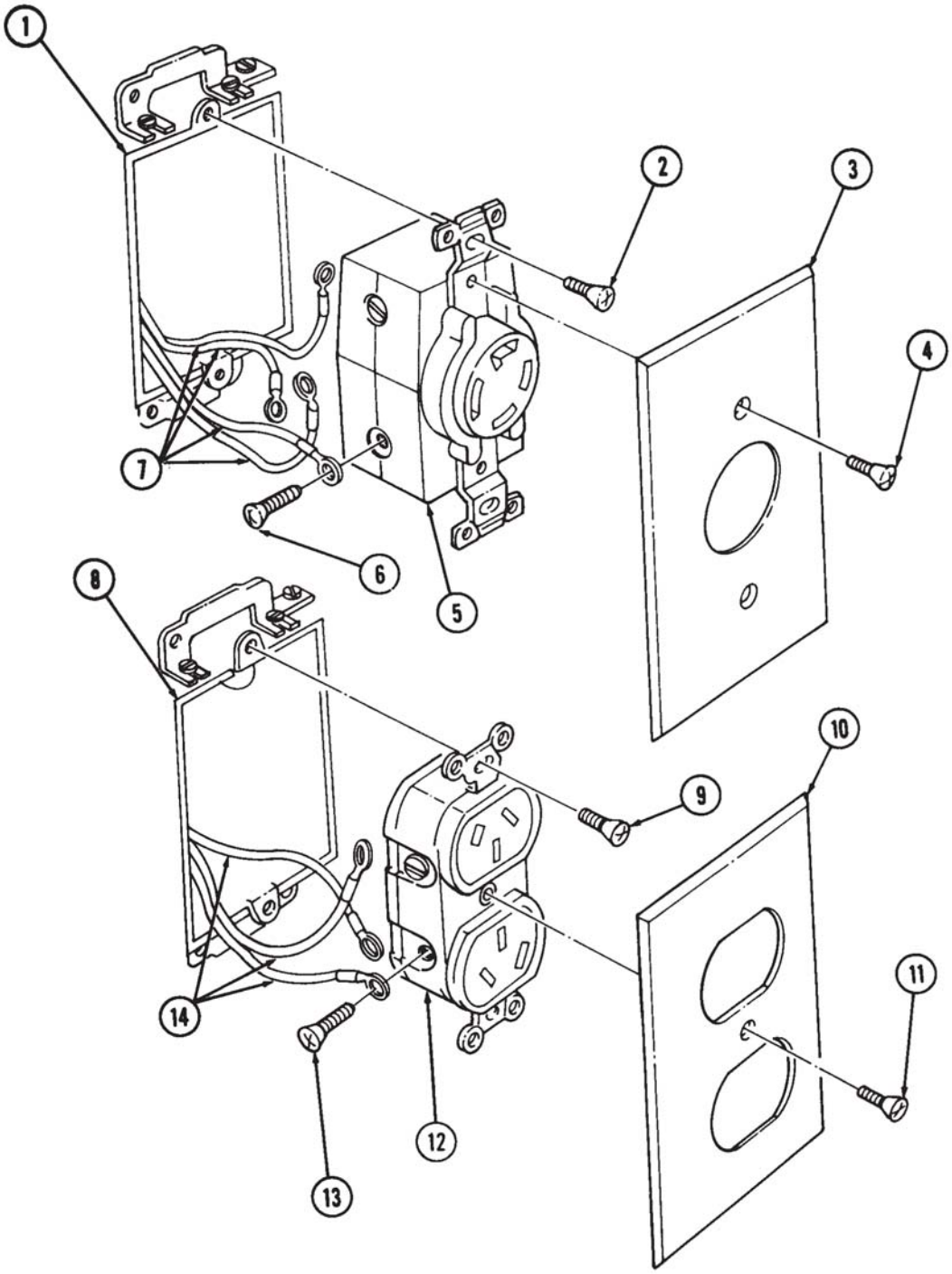

FOLLOW-ON TASK: Connect battery ground cable (para. 4-48).

12-35. CEILING, WALL SWITCHES, AND RECEPTACLES REPLACEMENT

THIS TASK COVERS:

a. Removal **b. Installation**

INITIAL SETUP

APPLICABLE MODELS
M820, M820A1, M820A2

REFERENCES (TM)
TM 9-2320-260-10
TM 9-2320-260-20P

EQUIPMENT CONDITION
- Parking brake set (TM 9-2320-260-10).
- Battery ground cable disconnected (para. 4-48).

a. Removal

NOTE

Tag all wires for installation.

1. Remove three screws (10) and cover plate (9) from switch (2) and receptacle (7).
2. Remove two screws (1) and switch (2) from junction box (5).
3. Remove two screws (8) and receptacle (7) from junction box (5).
4. Loosen five screws (6) and disconnect two wires (3) and four wires (4) from switch (2) and receptacle (7).

b. Installation

1. Connect two wires (3) and four wires (4) to switch (2) and receptacle (7) and tighten five screws (6).
2. Install receptacle (7) in junction box (5) with two screws (8).
3. Install switch (2) in junction box (5) with two screws (1).
4. Install cover plate (9) on receptacle (7) and switch (2) with three screws (10).

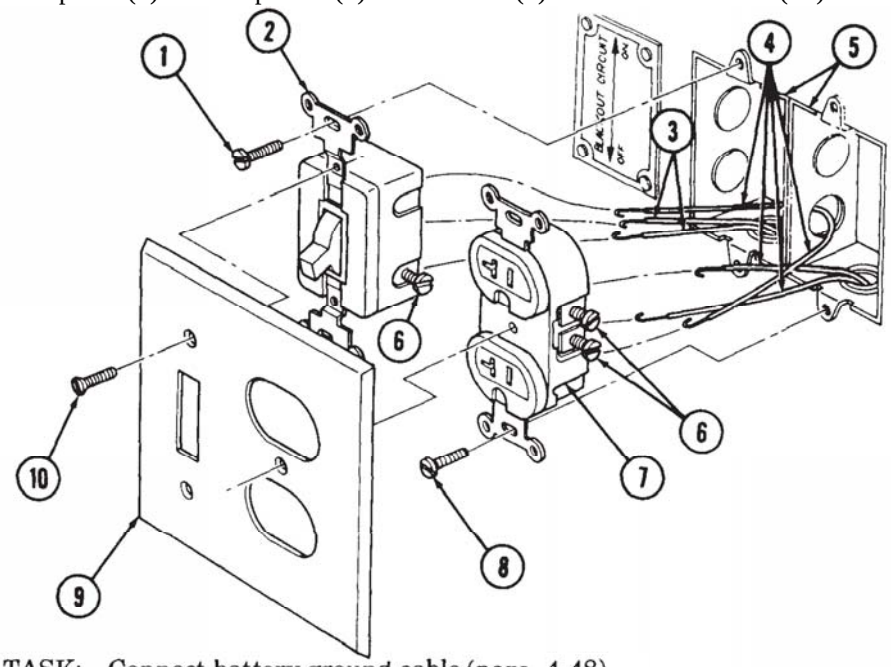

FOLLOW-ON TASK: Connect battery ground cable (para. 4-48).

12-36. EXPANDING AND RETRACTING MECHANISM LOCK REPLACEMENT

THIS TASK COVERS:

a. Removal **b. Installation**

INITIAL SETUP

APPLICABLE MODELS
M820, M820A1, M820A2

MATERIALS/PARTS
Locknut

REFERENCES (TM)
TM 9-2320-260-10
TM 9-2320-260-20P

EQUIPMENT CONDITION
Parking brake set (TM 9-2320-260-10).

a. Removal

1. Remove locknut (3) and lock plunger (1) from crossmember stud (2). Discard locknut (3).
2. Remove screw (5) and pawl (4) from crossmember (6).

b. Installation

1. Install pawl (4) on crossmember (6) with screw (5).
2. Insert lock plunger (1) in slot of pawl (4) and install on crossmember stud (2) with new locknut (3).

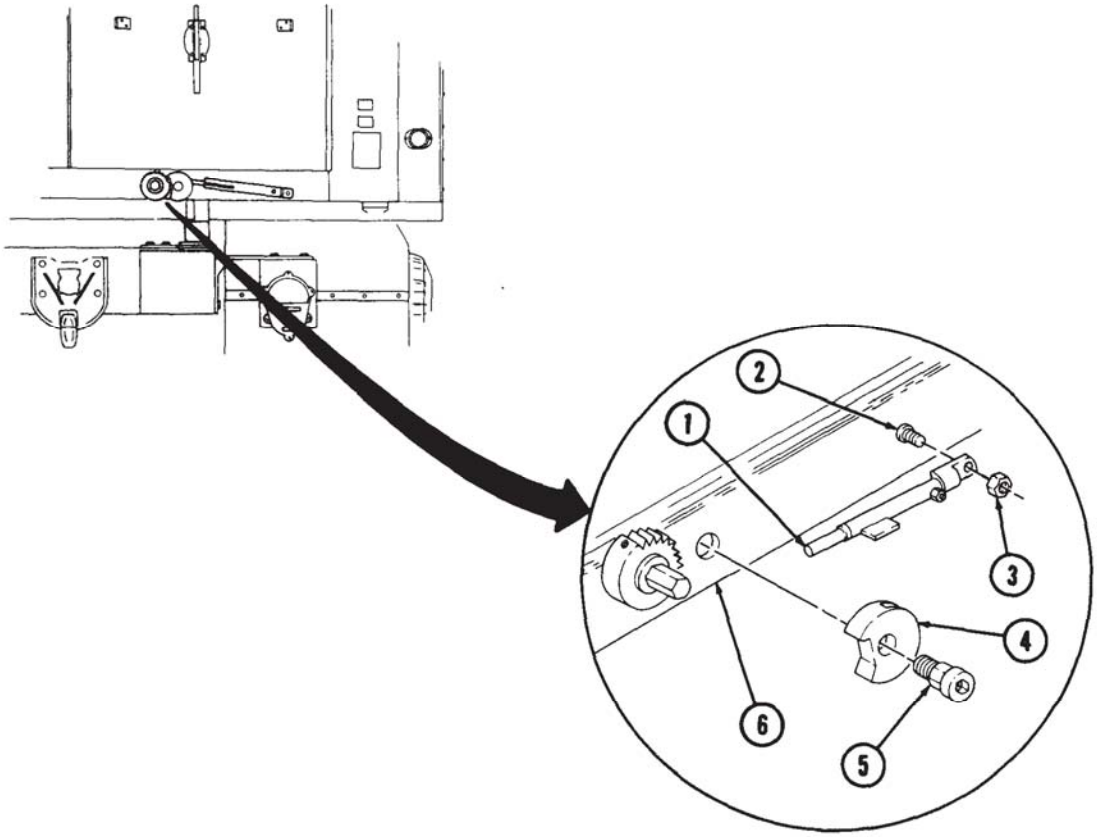

12-37. VAN HEATER AND EXHAUST REPLACEMENT

THIS TASK COVERS:

a. Removal **b. Installation**

INITIAL SETUP

APPLICABLE MODELS

M820, M820A1, M820A2

MATERIALS/PARTS

Twelve lockwashers
Antiseize tape (Appendix C, Item 30)

REFERENCES (TM)

TM 9-2320-260-10
TM 9-2320-260-20P

EQUIPMENT CONDITION

- Parking brake set (TM 9-2320-260-10)
- Battery ground cable disconneted (para. 4-48).
- Main power disconnected (TM 9-2320-260-10).

a. Removal

1. Remove eight screws (3), exhaust pipe (4), and two clamps (15) from van body (6) and heater exhaust pipe (12).
2. Remove two screws (14), lockwashers (2), nuts (1), and clamps (15) from exhaust pipe (4). Discard lockwashers (2).

NOTE

Tag all leads and lines for installation.

3. Remove nut (19) and fuel overflow line (23) from fitting (18).
4. Remove nut (24) and fuel receptacle line (25) from heater fuel valve (17).
5. Disconnect power receptacle connector (16) from heater (7).
6. Disconnect external fuel pump receptacle connector (26) from heater (7).
7. Disconnect room thermostat connector (27) from heater (7).
8. Remove four screws (8) and lockwashers (9) from heater bracket (10). Discard lockwashers (9).
9. Remove screw (22), ground strap (21), and lockwasher (20) from bracket (10) and heater (7). Discard lockwasher (20).

NOTE

Assistant will help with step 10.

10. Remove heater (7) from van body (6).
11. Remove five screws (22) and lockwashers (20) from two brackets (10) and heater (7). Discard lockwashers (20).
12. Remove heater exhaust pipe (12) from heater (7).
13. Remove four screws (5) and (13) and two seals (11) from van body (6).

12-37. VAN HEATER AND EXHAUST REPLACEMENT (Contd)

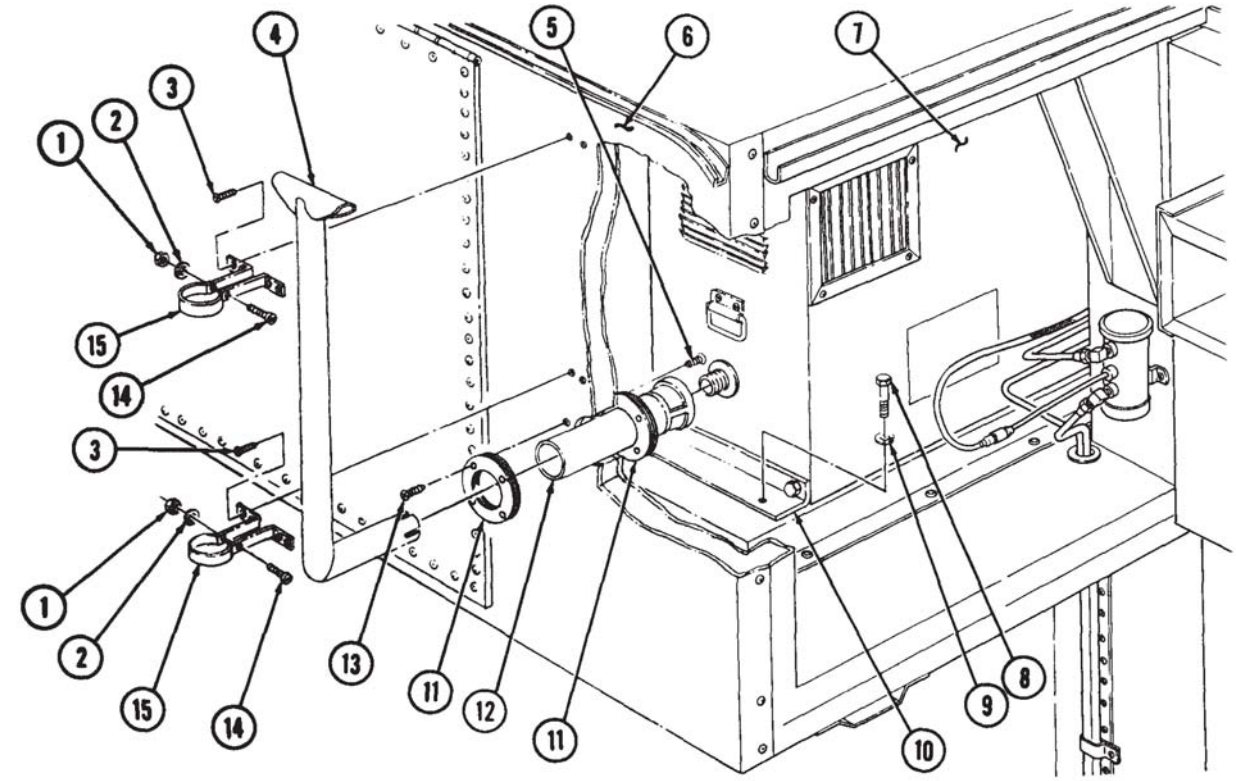

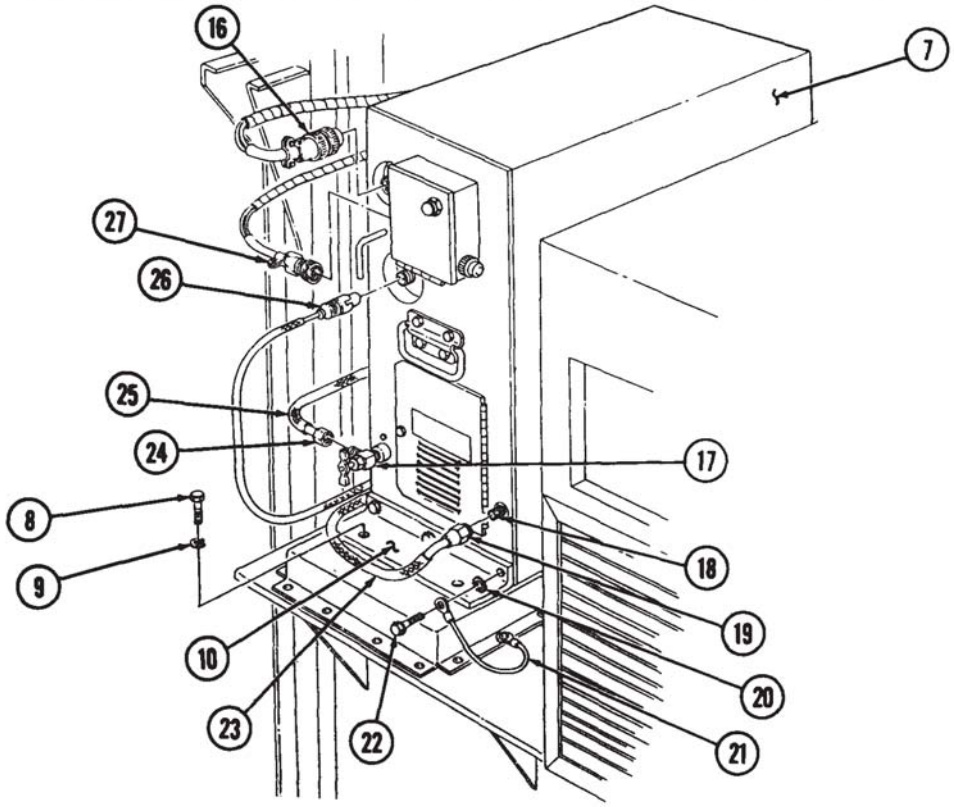

12-37. VAN HEATER AND EXHAUST REPLACEMENT (Contd)

b. Installation

1. Apply antiseize tape to male threads of heater fuel valve (16) and heater nipple (17).
2. Install two seals (9) on van body (3) with eight screws (4).
3. Install two brackets (8) on heater (5) with five screws (21) and new lockwashers (19).
4. Install heater exhaust pipe (10) on heater (5).

NOTE

Assistant will help with step 5.

5. Place heater (5) in van body (3).
6. Install bracket (8) on van body (3) with four screws (6) and new lockwashers (7).
7. Install ground strap (20) on bracket (8) and heater (5) with screw (21) and new lockwasher (19).
8. Install fuel overflow line (22) on fitting (17) with nut (18).
9. Install fuel receptacle line (24) on heater fuel valve (16) with nut (23).
10. Connect external fuel pump receptacle connector (25) to heater (5).
11. Connect power receptacle connector (15) to heater (5).
12. Connect room thermostat connector (26) to heater (5).
13. Install exhaust pipe (2) on heater exhaust pipe (10) with two clamps (12), eight screws (1), two screws (11), new lockwashers (13), and nuts (14).

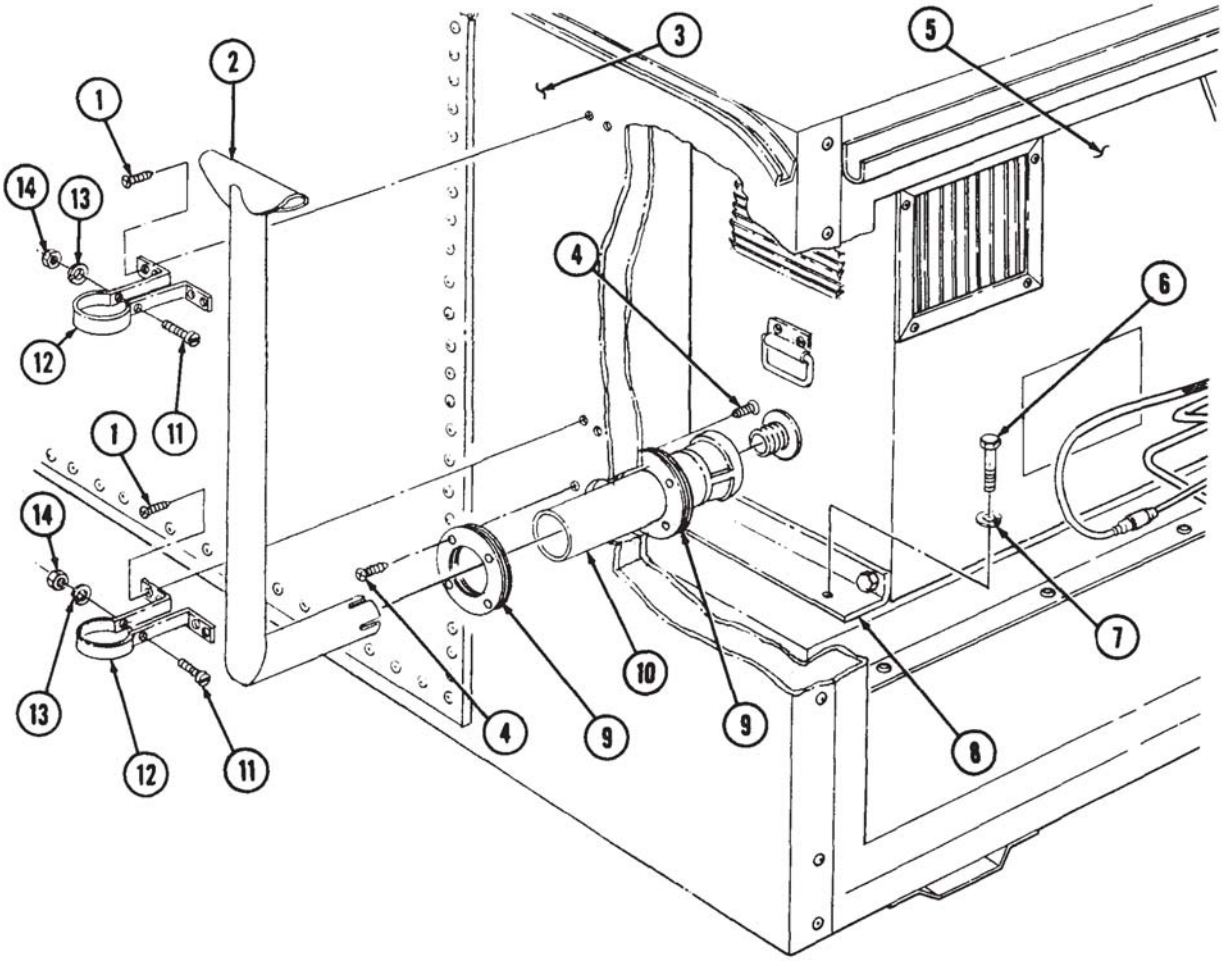

12-37. VAN HEATER AND EXHAUST REPLACEMENT (Contd)

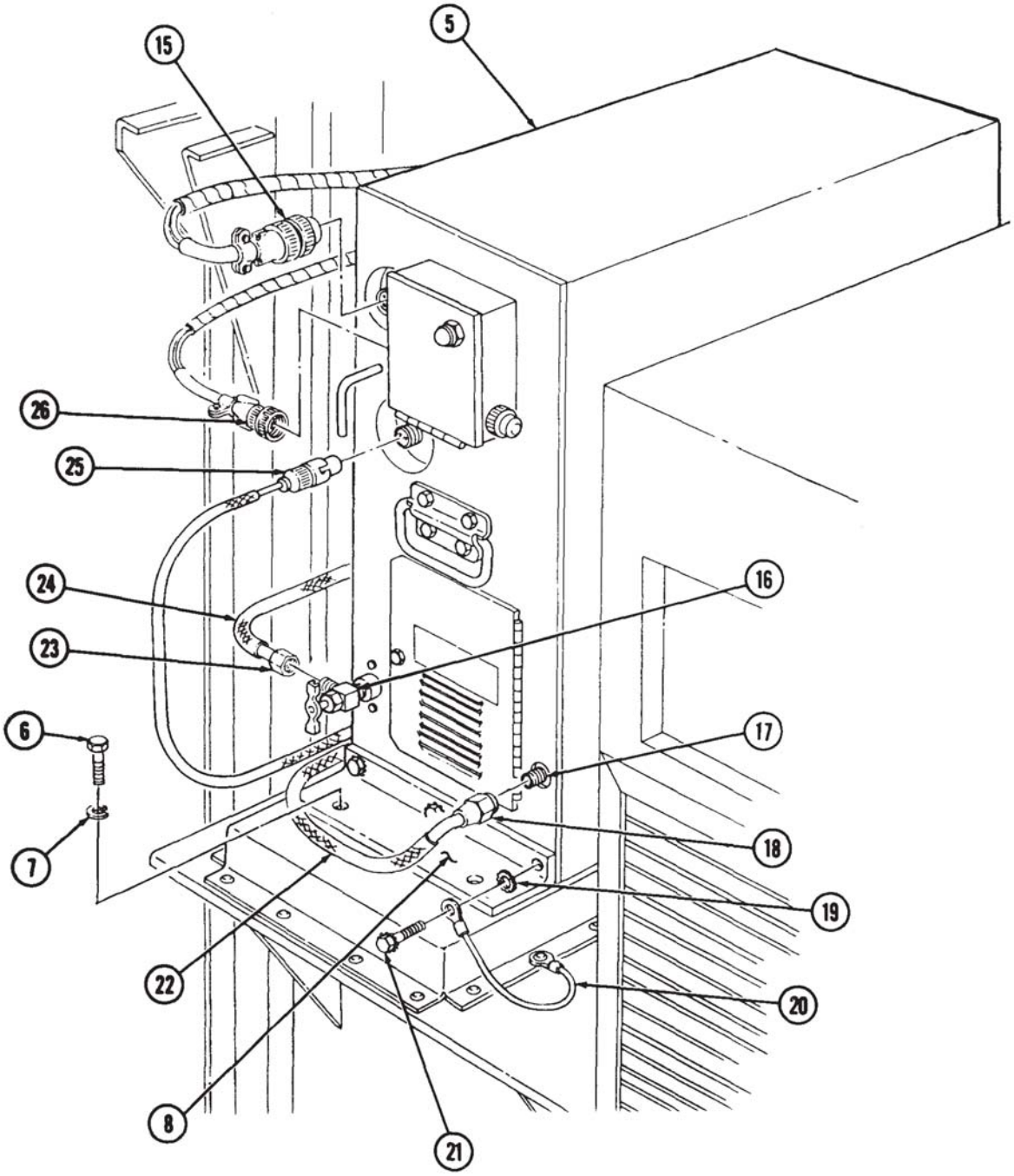

FOLLOW-ON TASKS: • Connect battery ground cable (para. 4-48).
• Connect main power (TM 9-2320-260-10).

12-38. BONNET CONTROL ROD REPLACEMENT

THIS TASK COVERS:

a. Removal **b. Installation**

INITIAL SETUP

APPLICABLE MODELS
M820, M820A1, M820A2

MATERIALS/PARTS
Two cotter pins
Locknut

REFERENCES (TM)
TM 9-2320-260-10
TM 9-2320-260-20P

EQUIPMENT CONDITION
Parking brake set (TM 9-2320-260-10).

a. Removal

1. Remove cotter pin (1), washer (2), and control rod (6) from control lever (4). Discard cotter pin (1).
2. Remove cotter pin (8) and control rod (6) from bonnet door bracket (7). Discard cotter pin (8).
3. Remove locknut (3) and control lever (4) from control lever mounting bracket (5). Discard locknut (3).

b. Installation

1. Install control lever (4) on control lever mounting bracket (5) with new locknut (3).
2. Install control rod (6) on bonnet door bracket (7) with new cotter pin (8).
3. Install control rod (6) on control lever (4) with washer (2) and new cotter pin (1).

12-38. BONNET CONTROL ROD REPLACEMENT (Contd)

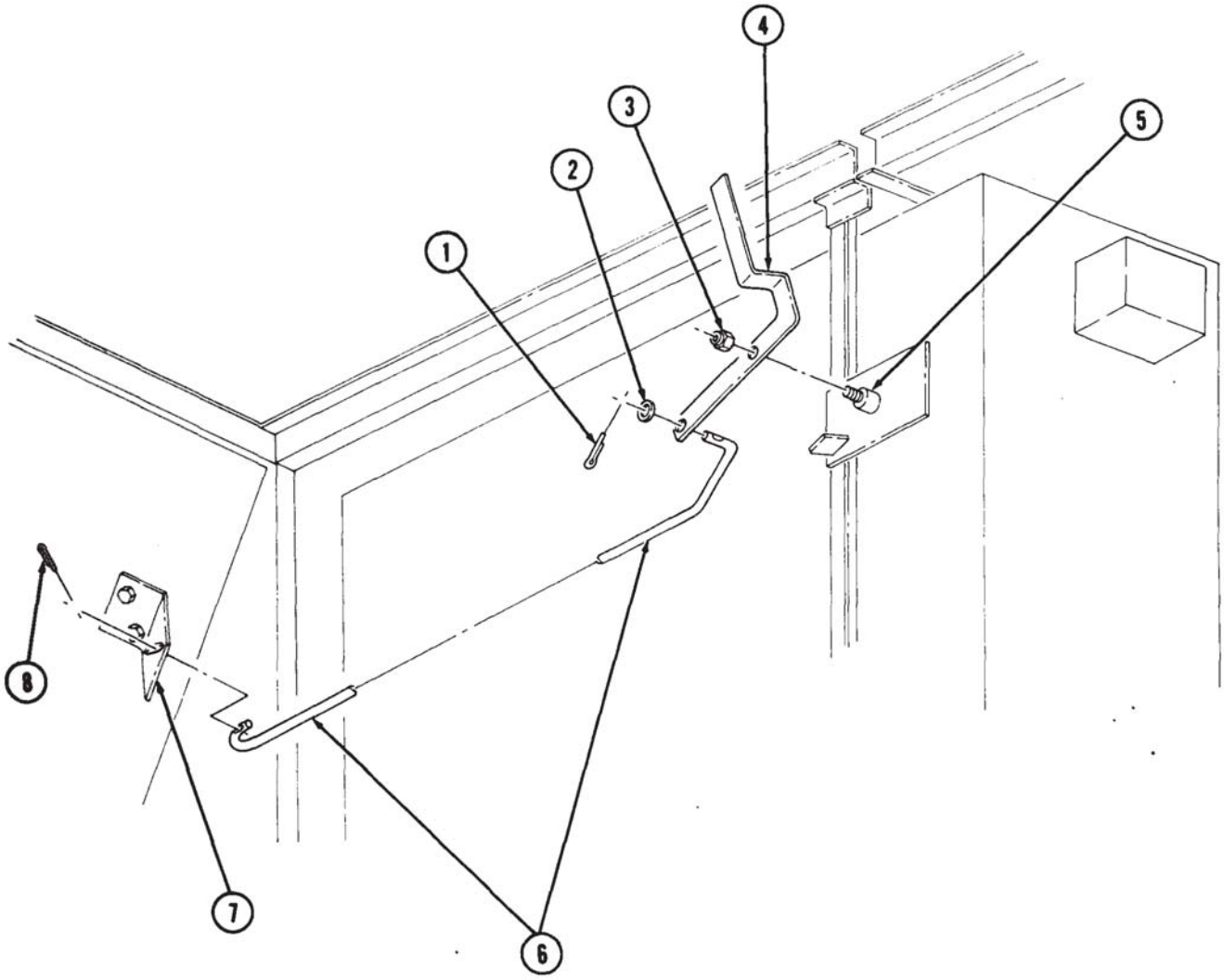

12-39. HINGED ROOF BLACKOUT PLUNGERS REPLACEMENT

THIS TASK COVERS:

a. Removal **b. Installation**

INITIAL SETUP

APPLICABLE MODELS
M820, M820A1, M820A2

REFERENCES (TM)
TM 9-2320-260-10
TM 9-2320-260-20P

EQUIPMENT CONDITION
- Parking brake set (TM 9-2320-260-10).
- Battery ground cable disconnected (para. 4-49).
- Van body side panels expanded (TM 9-2320-260-10).

a. Removal

1. Remove four screws (1) and plunger (2) from roof panel (3).
2. Remove two screws (4) and wires (5) from plunger (2).
3. Remove two screws (6) and plate (7) from van floor panel (8).

b. Installation

1. Install plate (7) on van floor panel (8) with two screws (6).
2. Install two wires (5) on plunger (2) with two screws (4).
3. Install plunger (2) in roof panel (3) with four screws (1).

12-39. HINGED ROOF BLACKOUT PLUNGERS REPLACEMENT (Contd)

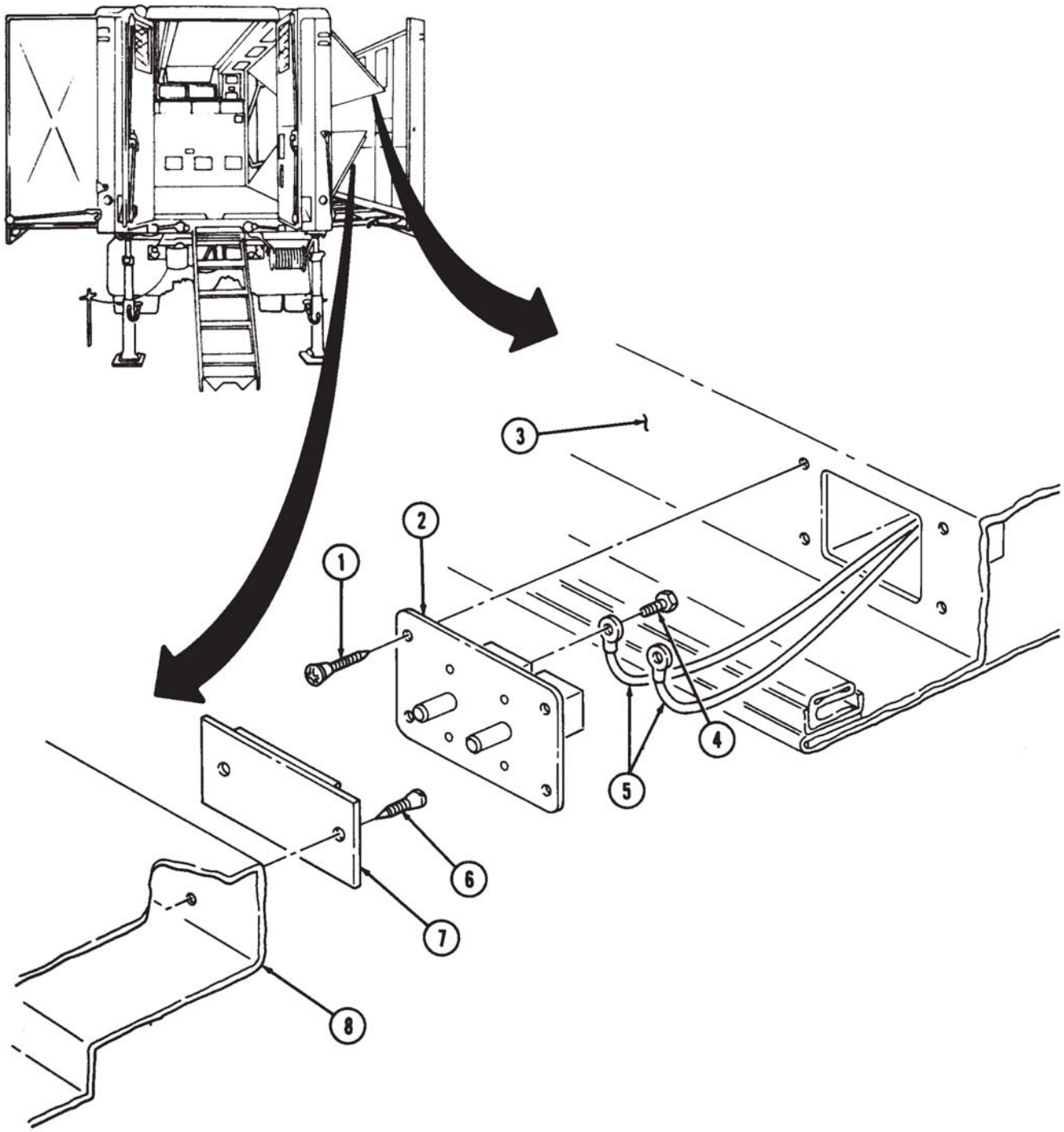

FOLLOW-ON TASKS: • Retract side panels (TM 9-2320-260-10).
• Connect battery ground cable (para. 4-48).

12-40. INTERIOR AND EXTERIOR TELEPHONE JACKS REPLACEMENT

THIS TASK COVERS:

a. Inside Jack Post Removal
b. Outside Jack Post Removal
c. Outside Jack Post Installation
d. Inside Jack Post Installation

INITIAL SETUP

APPLICABLE MODELS
M820, M820A1, M820A2

REFERENCES (TM)
TM 9-2320-260-10
TM 9-2320-260-20P

EQUIPMENT CONDITION
Parking brake set (TM 9-2320-260-10).

NOTE
Tag all wires for installation.

a. Inside Jack Post Removal

1. Remove four screws (4) and junction box (6) from panel wall (10).
2. Remove two screws (14), four wires (15), and two nuts (1) from jack posts (5).
3. Remove two jack posts (5) and grommets (16) from junction box (6).

b. Outside Jack Post Removal

1. Remove thirteen screws (2) and retainer (3) from panel wall (10).
2. Remove two screws (7), wires (8), and nuts (9) from jack posts (13).

NOTE
Assistant will help with step 3.

3. Remove two jack posts (13) and grommets (12) from junction box (11).

c. Outside Jack Post Installation

NOTE
Assistant will help with step 1.

1. Install two grommets (12) and jack posts (13) injunction box (11) with two nuts (9), wires (8), and screws (7).
2. Install retainer (3) on panel wall (10) with thirteen screws (2).

d. Inside Jack Post Installation

1. Install two grommets (16) and jack posts (5) in junction box (6) with two nuts (1), four wires (15), and two screws (14).
2. Install junction box (6) on panel wall (10) with four screws (4).

12-40. INTERIOR AND EXTERIOR TELEPHONE JACKS REPLACEMENT (Contd)

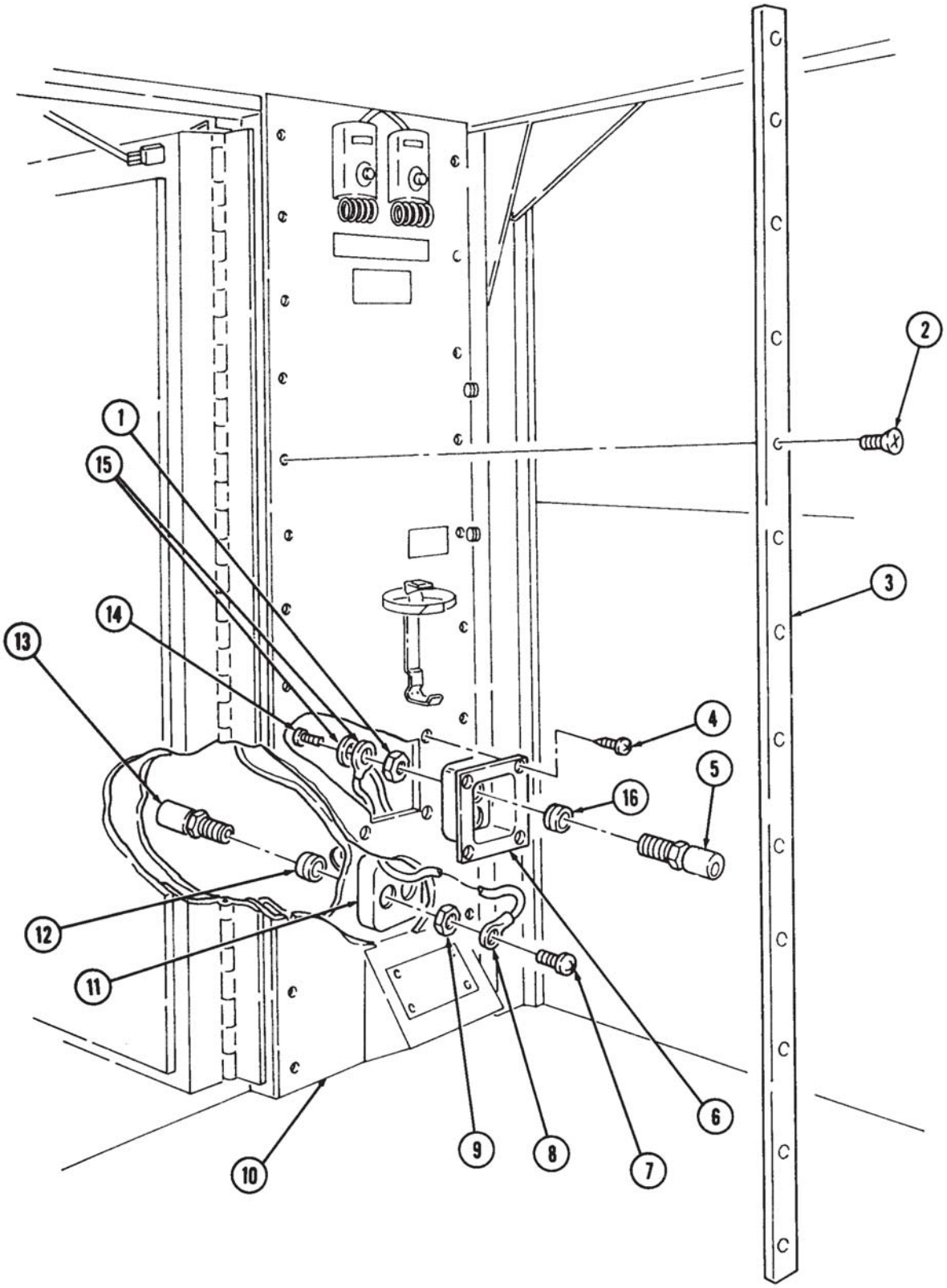

12-41. BLACKOUT AND EMERGENCY LAMPS REPLACEMENT

THIS TASK COVERS:

a. Removal **b. Installation**

INITIAL SETUP

APPLICABLE MODELS
M820, M820A1, M820A2

REFERENCES (TM)
TM 9-2320-260-10
TM 9-2320-260-20P

EQUIPMENT CONDITION
- Parking brake set (TM 9-2320-260-10).
- External power source disconnected (TM 9-2320-260-10).
- Battery ground cable disconnected (para. 4-48).

NOTE

The six blackout and emergency lamps are replaced the same way. This procedure covers one blackout and emergency lamp only.

a. Removal

1. Remove two screws (5) and lens (3) from blackout and emergency lamp future (1).
2. Remove two lamps (2) from fixture (1).

b. Installation

1. Install two lamps (2) in future (1).
2. Install lens (3) on blackout and emergency lamp fixture (1) with two screws (5).

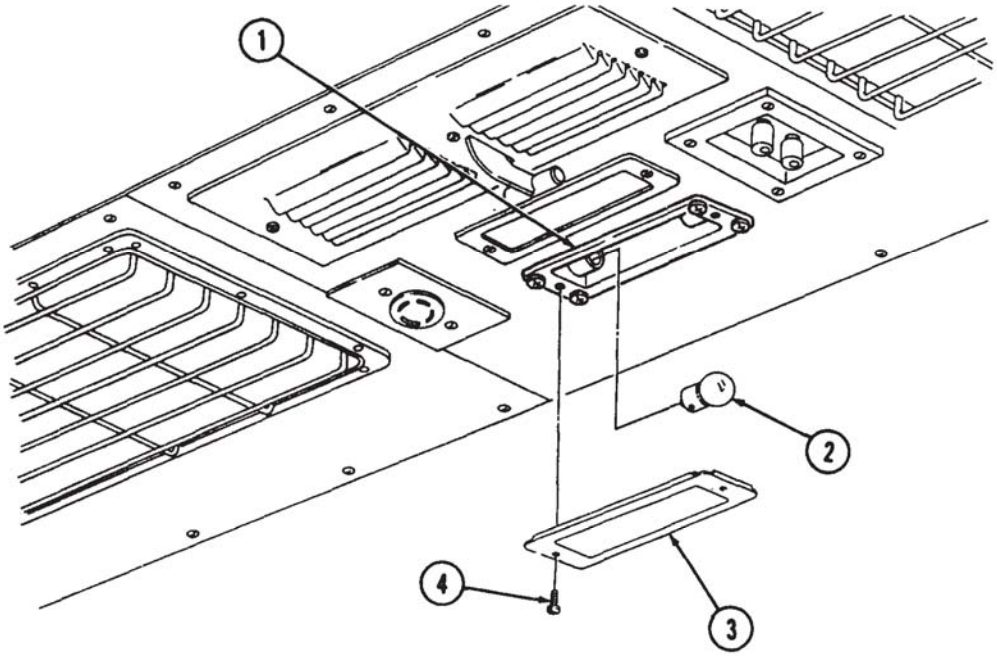

FOLLOW-ON TASKS:
- Connect battery ground cable (para. 4-48).
- Connect external power source (TM 9-2320-260-10).

12-42. FLUORESCENT LIGHTS REPLACEMENT

THIS TASK COVERS:

a. Removal **b. Installation**

INITIAL SETUP

APPLICABLE MODELS
M820, M820A1, M820A2

REFERENCES (TM)
TM 9-2320-260-10
TM 9-2320-260-20P

EQUIPMENT CONDITION
- Parking brake set (TM 9-2320-260-10).
- Battery ground cable disconnected (para. 4-48).

a. Removal

1. Remove two screws (4) from guard (3) and light fixture (1).
2. Tilt guard (3) down and remove three fluorescent lamps (5) from light sockets (2).

b. Installation

1. Install three fluorescent lamps (5) in light sockets (2).
2. Install guard (3) on light future (1) with two screws (4).

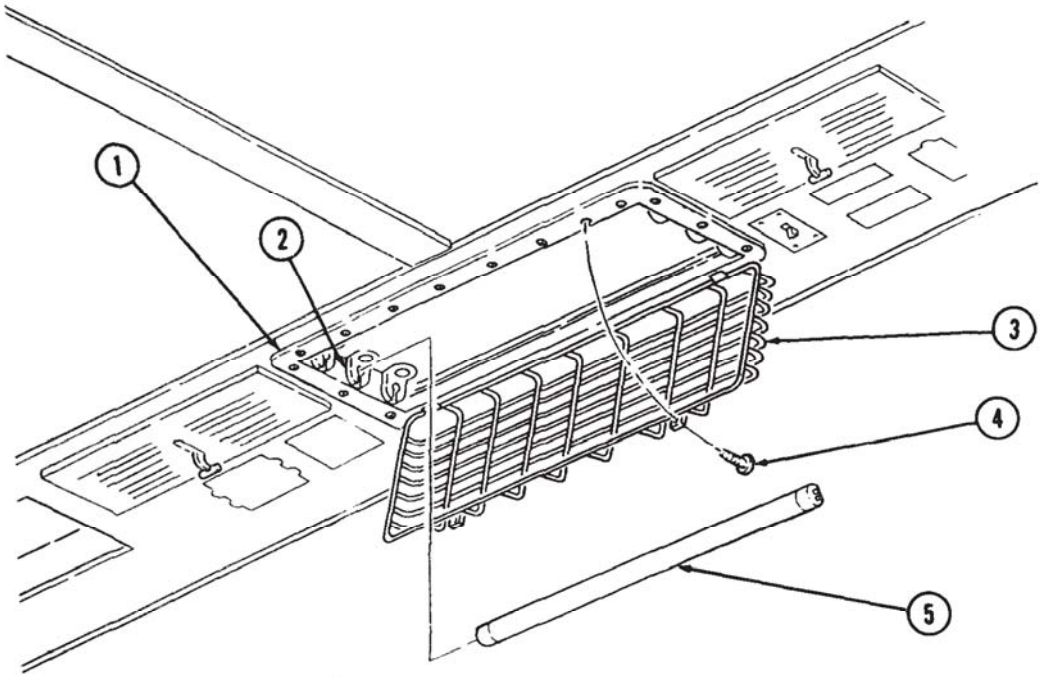

FOLLOW-ON TASK: Connect battery ground cable (para. 4-48).

12-43. AIR CONDITIONER DRAIN TUBE REPLACEMENT

THIS TASK COVERS:

a. Removal **b. Installation**

INITIAL SETUP

APPLICABLE MODELS
M820, M820A1, M820A2

MATERIALS/PARTS
Cotter pin

REFERENCES (TM)
TM 9-2320-260-10
TM 9-2320-260-20P

EQUIPMENT CONDITION
- Parking brake set (TM 9-2320-260-10).
- Bonnet door open (TM 9-2320-260-10).

a. Removal

1. Remove cotter pin (2) and door rod (1) from bonnet door (3). Discard cotter pin (2).
2. Remove nut (7) and drain tube (8) from elbow (6).
3. Remove elbow (6) from elbow (4).
4. Remove elbow (4) from air conditioner (5).
5. Remove four screws (9), clamps (10), and drain tube (8) from van body (11).

b. Installation

1. Apply antiseize tape to male threads of elbows (4) and (6).
2. Install elbow (4) on air conditioner (5).
3. Install elbow (6) on elbow (4).
4. Install drain tube (8) on elbow (6) with nut (7).
5. Install drain tube (8) on van body (11) with four clamps (10) and screws (9).
6. Install door rod (1) on bonnet door (3) with new cotter pin (2).

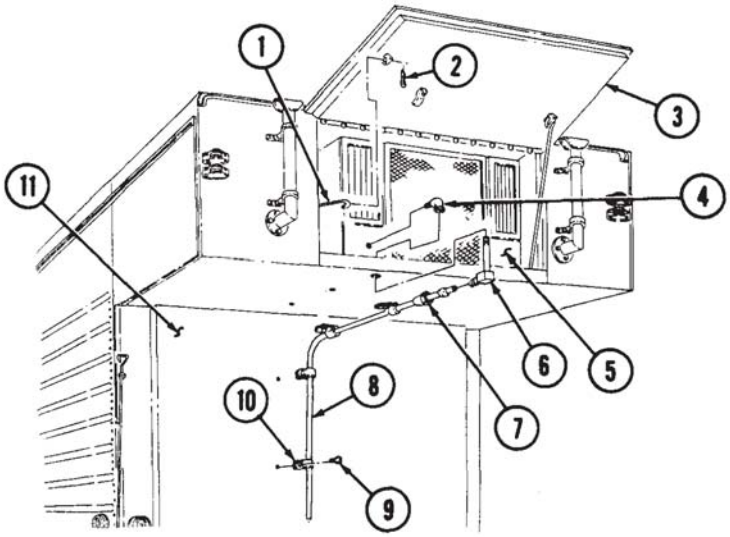

FOLLOW-ON TASK: Close bonnet door (TM 9-2320-260-10).

12-44. BONNET ACCESS DOOR MAINTENANCE

THIS TASK COVERS:

a. Removal
b. Disassembly
c. Cleaning and Inspection
d. Assembly
e. Installation

INITIAL SETUP

APPLICABLE MODELS
M820, M820A1, M820A2

MATERIALS/PARTS
One hundred forty-eight rivets
Two seals
Fibrous glass felt insulation

MATERIALS/PARTS (Contd)
Sealing compound (Appendix C, Item 25)

REFERENCES (TM)
TM 9-2320-260-10
TM 9-2320-260-20P

EQUIPMENT CONDITION
Parking brake set (TM 9-2320-260-10).

GENERAL SAFETY INSTRUCTIONS
Gloves, eyeshields, and dust mask must be worn during bonnet access door maintenance.

WARNING

Van body is insulated with fibrous glass felt insulation. Gloves, eyeshields, and dust mask must be worn during bonnet access door maintenance. Failure to do so may result in injury to personnel.

a. Removal

NOTE

Assistant will help with removal.

Remove twelve screws (2) and access door (3) from bonnet frame (1).

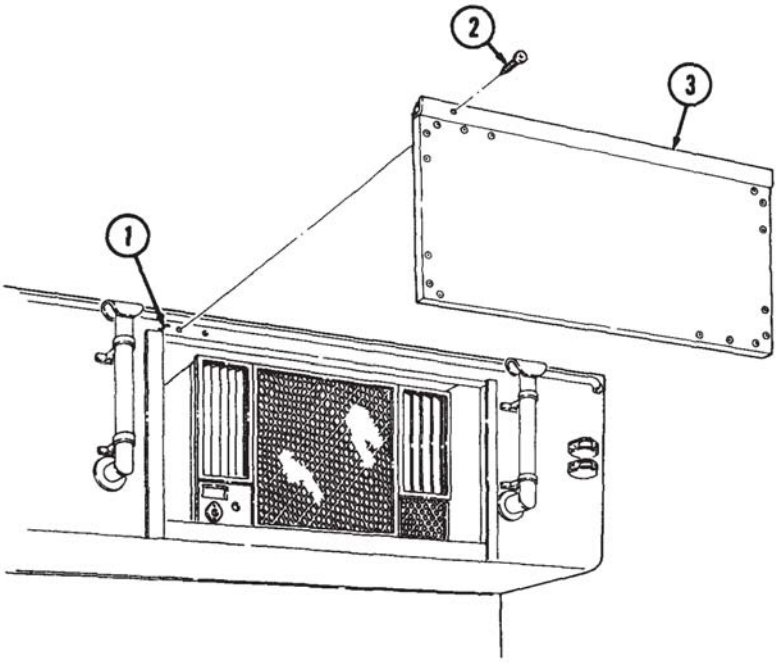

12-44. BONNET ACCESS DOOR MAINTENANCE (Contd)

b. Disassembly

1. Remove twelve screws (3), hinge (2), and seal (1) from door frame (18). Discard seal (1).
2. Remove four screws (6) and two angle brackets (5) from inner panel (4).
3. Remove four screws (8), rod (9), and holder bracket (7) from inner panel (4).
4. Remove screw (12), two nuts (10), screws (13), and bracket (11) from inner panel (4).

NOTE

Assistant will help with step 5.

5. Remove thirty-three nuts (14), screws (20), seventy-four rivets (21), outer panel (19), three retainers (15), and seal (17) from door frame (18). Discard seal (17),

NOTE

Perform step 6 if inner panel is to be replaced (subtask c.).

6. Remove seventy-four rivets (16) and inner panel (4) from door frame (18). Discard rivets (16).

c. Cleaning and Inspection

1. Inspect hinge (2) for bends, breaks, and proper operation. Replace hinge (2) if bent, broken, or operating improperly.
2. Inspect three retainers (15) for bends and breaks. Replace retainers (15) if bent or broken.
3. Inspect angle brackets (5), holder bracket (7), and rod (9) for cracks and breaks. Replace angle brackets (5), holder bracket (10), or rod (9) if cracked or broken.
4. Inspect outer panel (19) and inner panel (4) for cracks and punctures. Replace outer panel (19) or inner panel (4) if cracked or punctured.
5. Inspect door frame (18) for bends, cracks, and breaks. Replace door frame (18) if bent, cracked, or broken.

12-44. BONNET ACCESS DOOR MAINTENANCE (Contd)

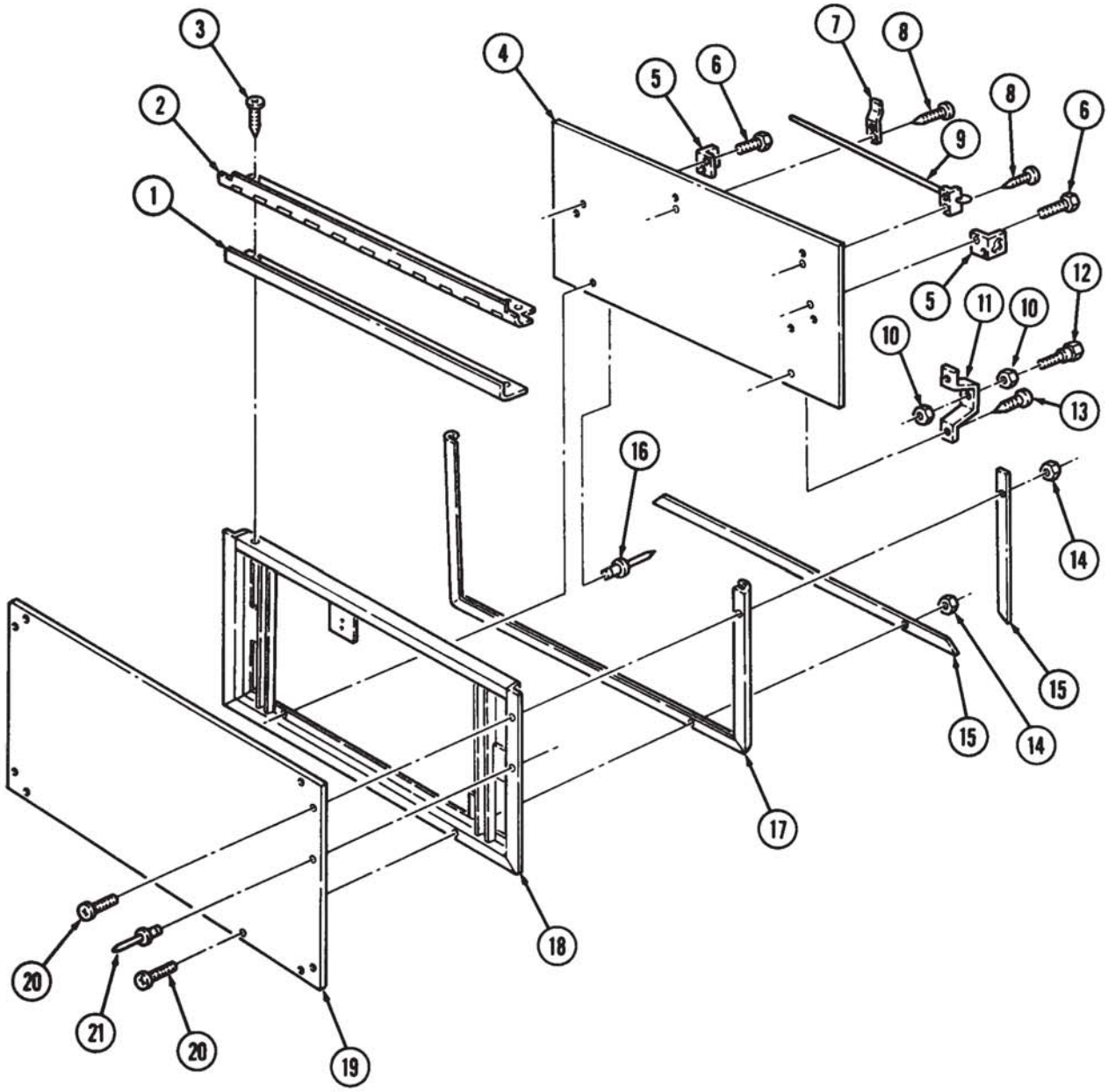

12-44. BONNET ACCESS DOOR MAINTENANCE (Contd)

d. Assembly

NOTE

- Insulate areas of dissimilar metal-to-metal contact with zinc chromate primer.
- Seal between exterior joints with sealing compound.
- Insulate all enclosed structures with fibrous glass felt insulation.
- Perform step 1 if inner panel is to be installed (subtask c.).
- Assistant will help with steps 1 and 2.

1. Install inner panel (4) on door frame (18) with seventy-four new rivets (16).
2. Install new seal (1), three retainers (15), and outer panel (19) on door frame (18) with thirty-three screws (20), nuts (14), and seventy-four new rivets (21).
3. Install holder bracket (7) and rod (9) on inner panel (4) with four screws (8).
4. Install screw (12) and two nuts (10) on bracket (11).
5. Install bracket (11) on inner panel (4) with two screws (13).
6. Install two angle brackets (5) on inner panel (4) with four screws (6).
7. Install new seal (1) and hinge (2) on door frame (18) with twelve screws (3).

e. Installation

NOTE

Assistant will help with installation.

Install access door (24) on bonnet frame (22) with twelve screws (23).

12-44. BONNET ACCESS DOOR MAINTENANCE (Contd)

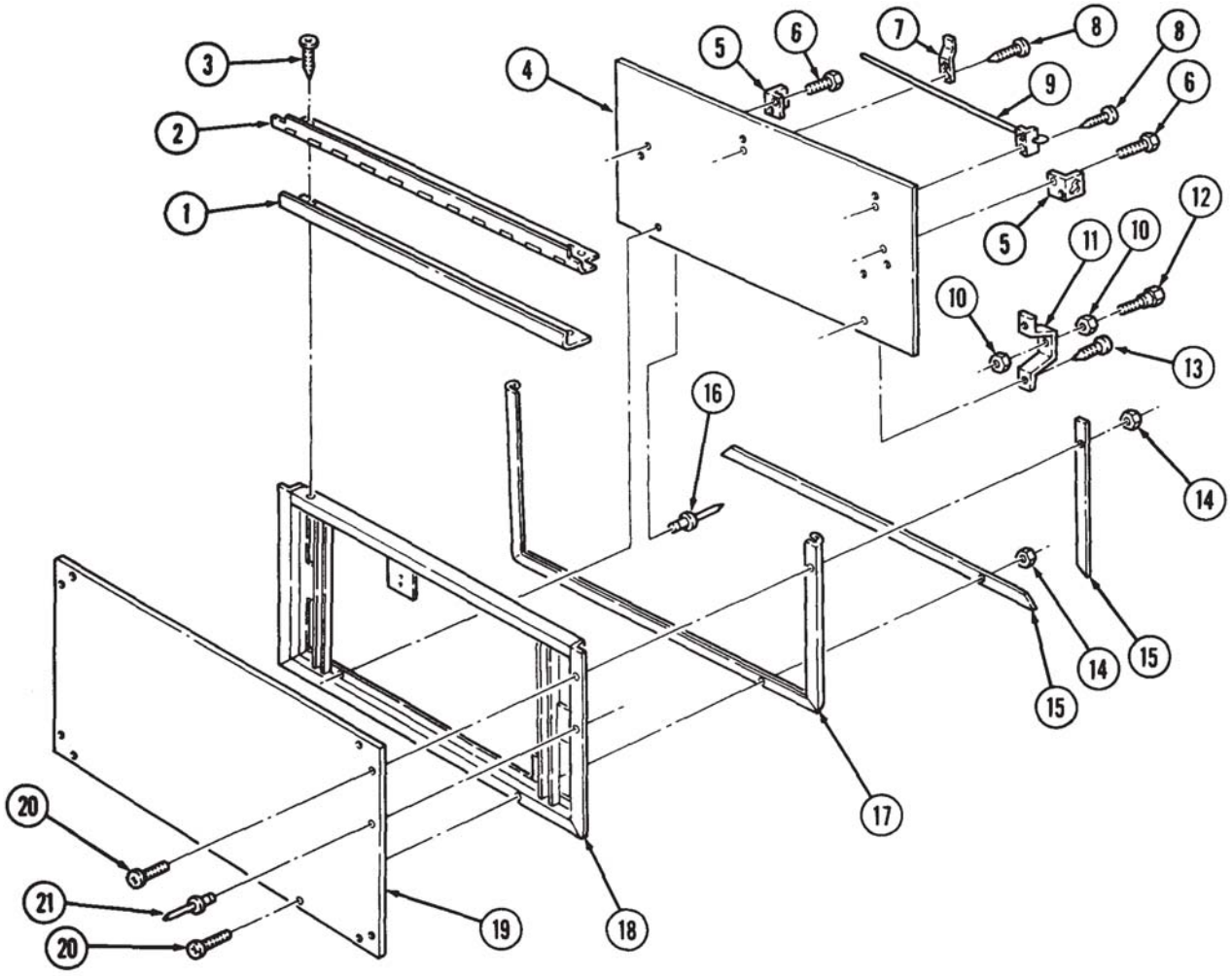

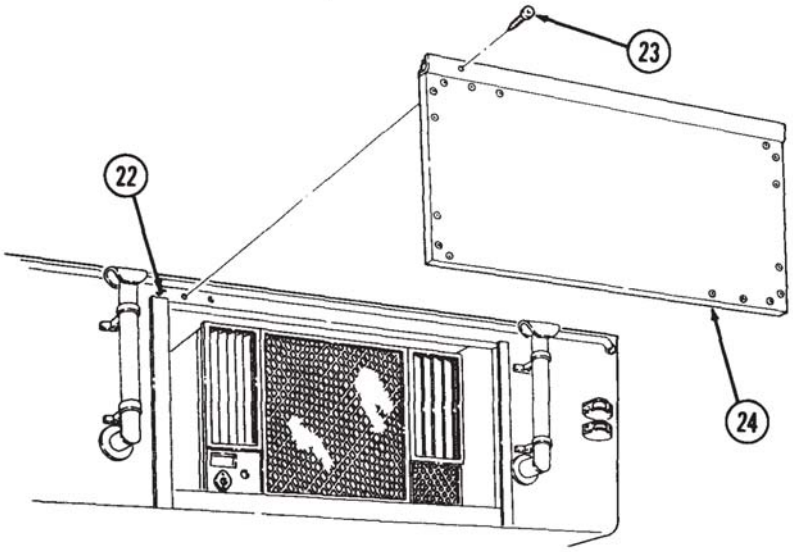

12-45. CEILING LIGHT FIXTURES MAINTENANCE

THIS TASK COVERS:

a. Fluorescent Light Fixture Removal
b. Ceiling Light Fixture Removal
c. Fluorescent Light Fixture Disassembly
d. Fluorescent Light Fixture Assembly
e. Fluorescent Light Fixture Installation
f. Ceiling Light Fixture Installation

INITIAL SETUP

APPLICABLE MODELS
M820, M820A2

MATERIALS/PARTS
Lockwasher
Four insulated wire splices

REFERENCES (TM)
TM 9-2320-260-10

EQUIPMENT CONDITION
- External power source disconnected (TM 9-2320-260-10).
- Battery ground cable disconnected (para. 4-48).
- Fluorescent lights removed (para. 12-42).
- Ceiling lights removed (TM 9-2320-260-10).

a. Fluorescent Light Fixture Removal

CAUTION

Use care when maintaining fluorescent light fixtures. Excessive snagging or pulling on wiring harnesses may damage wiring harness.

NOTE

Tag wires, cables, and leads for installation.

1. Remove twenty screws (7) and light fixture (8) from van ceiling (9).
2. Remove screw (10), nut (6), lockwasher (5), and ground wire (4) from light fixture (8). Discard lockwasher (5).
3. Disconnect two wires (3) and wires (1) from two insulated wire splices (2). Discard insulated wire splices (2).

b. Ceiling Light Fixture Removal

NOTE

All ceiling light fixtures are replaced the same. This procedure covers one ceiling light fixture.

1. Remove four screws (16) and center light fixture (15) from ceiling (11).

NOTE

Tag wires, cables, and leads for installation.

2. Disconnect two wires (12) and wires (14) from two insulated wire splices (13). Discard insulated wire splices (13).

12-45. CEILING LIGHT FIXTURES MAINTENANCE (Contd)

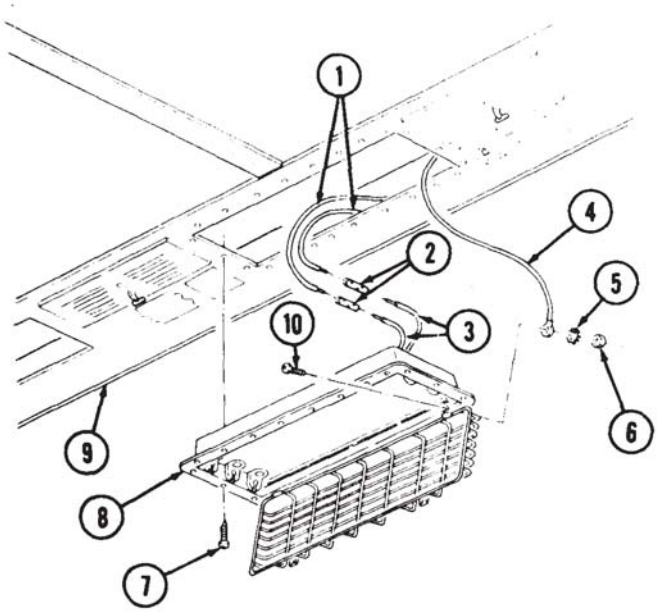

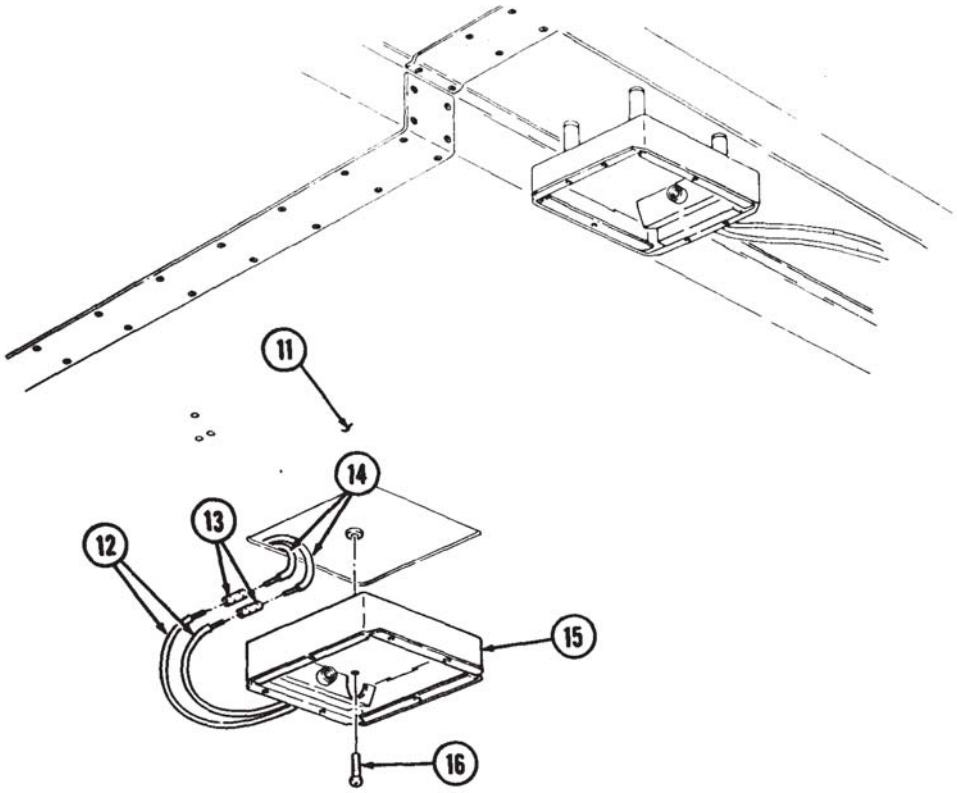

12-45. CEILING LIGHT FIXTURES MAINTENANCE (Contd)

c. Fluorescent Light Fixture Disassembly

1. Remove four screws (12), fixture (10), and two wires (3) from light fixture (1).
2. Remove six screws (9), nuts (6), and sockets (7) from fixture (10).

NOTE

Tag wires, cables, and leads for installation.

3. Remove twelve screws (5) and wires (4) from six sockets (7).
4. Remove six starters (8) from six sockets (7).
5. Remove grommet (2) from light fixture (1).

d. Fluorescent Light Fixture Assembly

1. Install grommet (2) in light fixture (1).
2. Install six starters (8) in six sockets (7).
3. Install six sockets (7) in fixture (10) with six screws (9) and nuts (6).
4. Install twelve wires (4) in six sockets (7) with twelve screws (5).
5. Route two wires (3) through grommet (2) in light fixture (1) and install fixture (10) on light fixture (1) with four screws (12).

e. Fluorescent Light Fixture Installation

1. Connect two wires (15) to two wires (13) with two new insulated wire splices (14).
2. Install ground wire (16) on light fixture (1) with screw (21), new lockwasher (17), and nut (18).
3. Install light fixture (2) in van ceiling (20) with twenty screws (19).

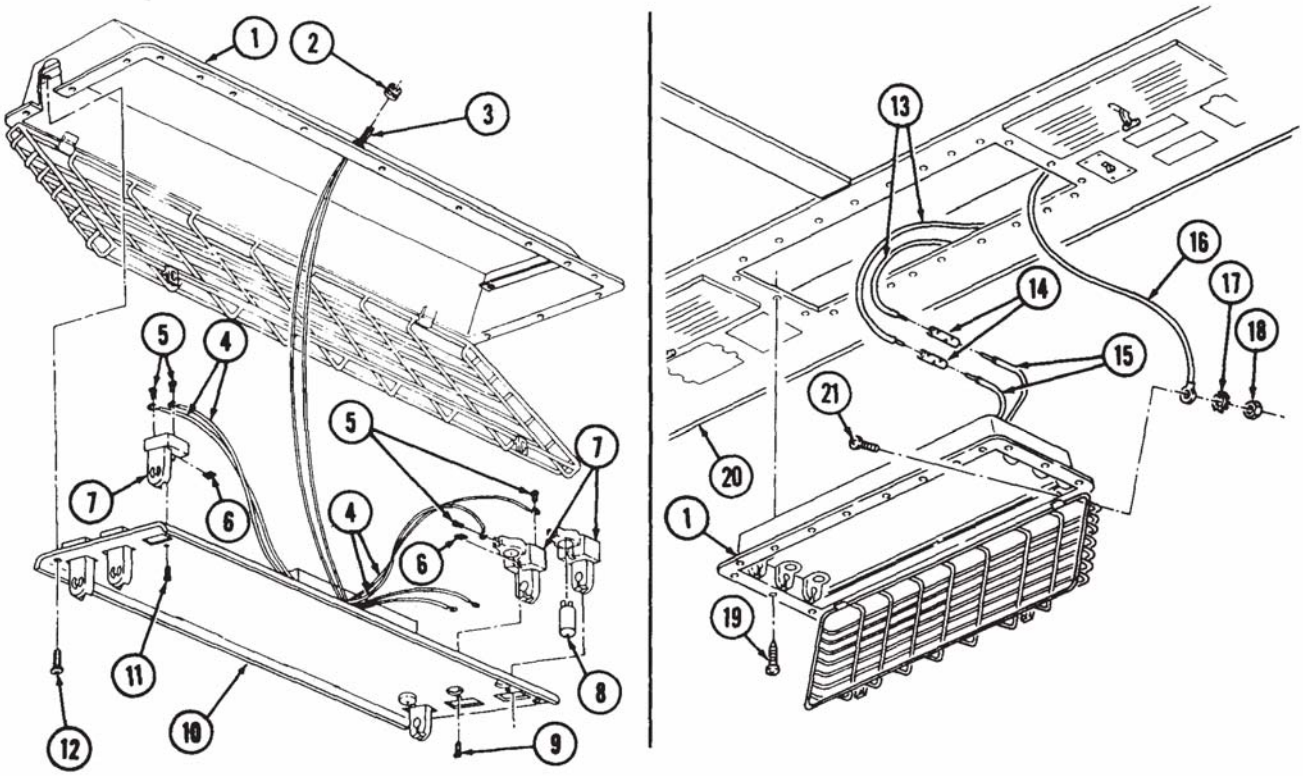

12-45. CEILING LIGHT FIXTURES MAINTENANCE (Contd)

f. Ceiling Light Fixture Installation

1. Connect two wires (22) to two wires (24) with two new insulated wire splices (23).
2. Install center ceiling light fixture (25) in ceiling (20) with four screws (26).

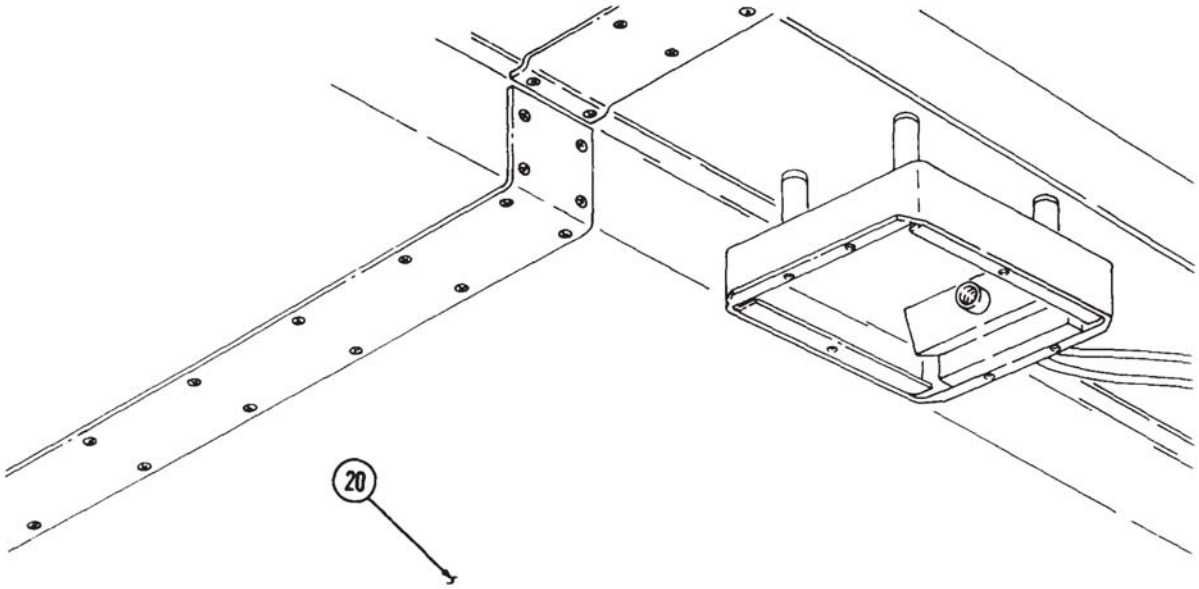

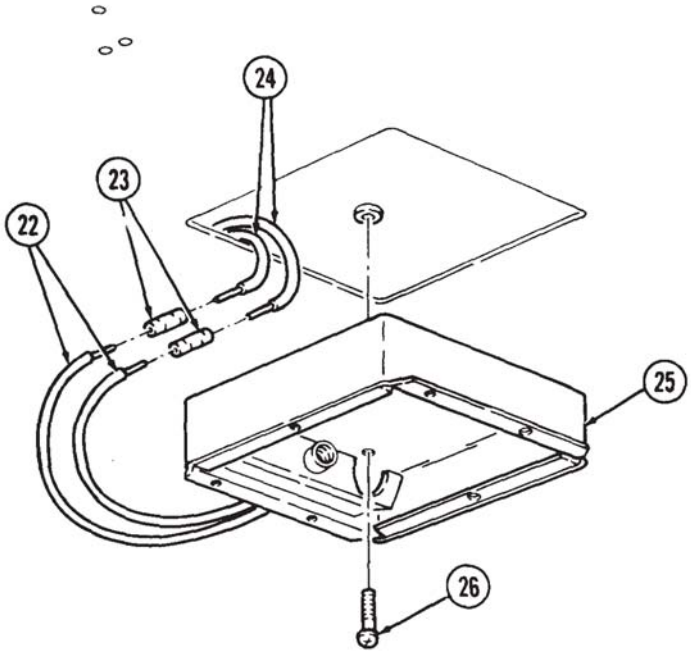

FOLLOW-ON TASKS:
- Connect battery ground cable (para. 4-48).
- Install fluorescent lights (para. 12-42).
- Install ceiling lights (TM 9-2320-260-10).

12-46. SPARE TIRE CARRIER REPLACEMENT

THIS TASK COVERS:

a. Removal **b. Installation**

INITIAL SETUP

APPLICABLE MODELS
M820, M820A1, M820A2

MATERIALS/PARTS
Twenty locknuts

REFERENCES (TM)
TM 9-2320-260-10
TM 9-2320-260-20P

EQUIPMENT CONDITION
- Parking brake set (TM 9-2320-260-10).
- Spare tires removed (TM 9-2320-260-10).

a. Removal

1. Remove six locknuts (2), screws (5), and four braces (3) from bracket (1) and tire support (13). Discard locknuts (2).
2. Remove two locknuts (14), screws (12), and bracket (1) from tire support (13). Discard locknuts (14).
3. Remove four locknuts (9), screws (4), and tire support (13) from two angle brackets (7). Discard locknuts (9).
4. Remove eight locknuts (11), screws (8), and two angle brackets (7) from frame (10). Discard locknuts (11).

b. Installation

1. Install two angle brackets (7) on frame (10) with eight screws (8) and new locknuts (11).
2. Install tire support (13) on two angle brackets (7) with four screws (4) and new locknuts (9).
3. Install bracket (1) on tire support (13) with two screws (12) and new locknuts (14).
4. Install four braces (3) on tire support (13) and bracket (1) with six screws (5) and new locknuts (2).

12-46. SPARE TIRE CARRIER REPLACEMENT (Contd)

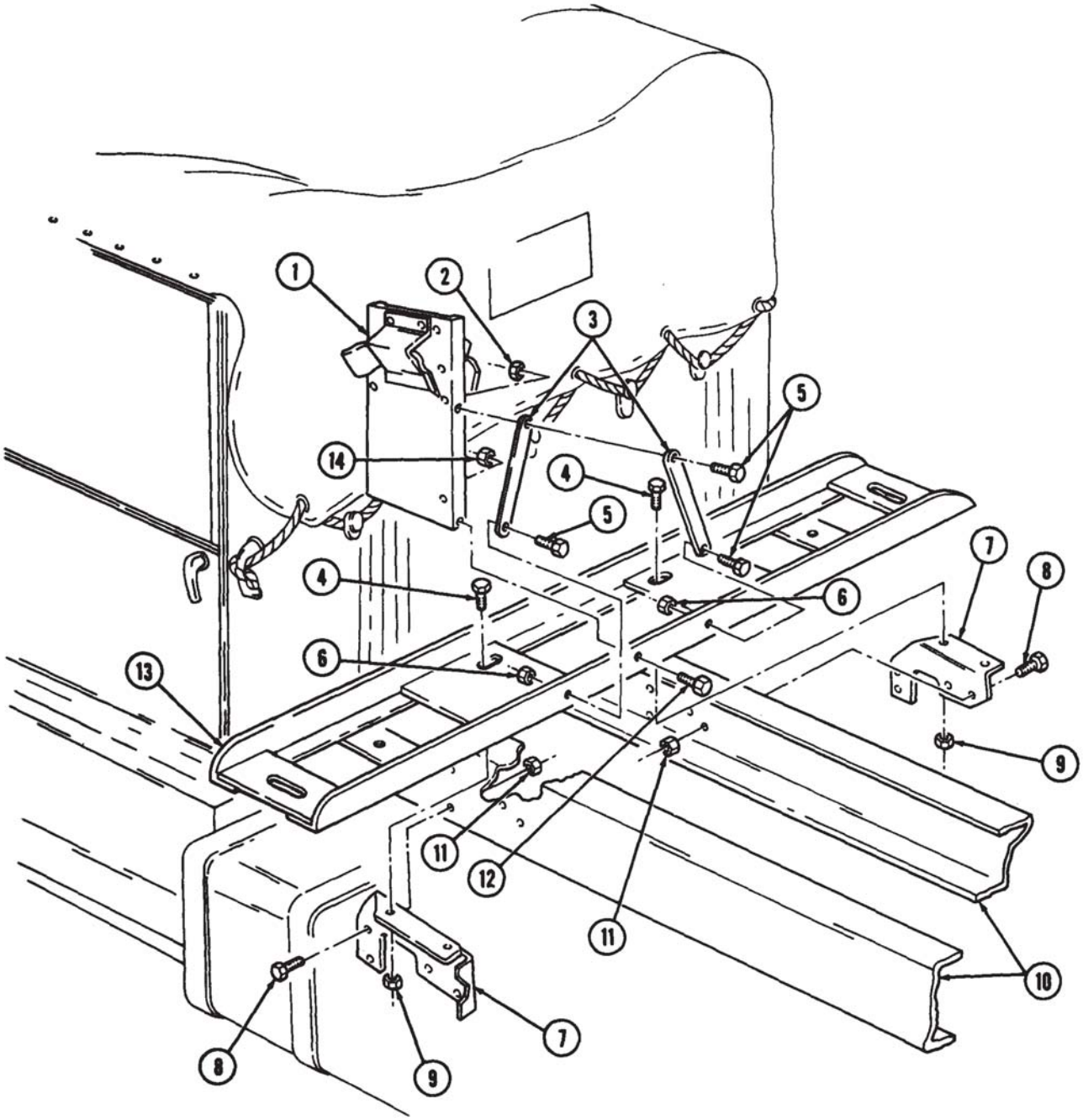

FOLLOW-ON TASK: Install spare tires (TM 9-2320-260-10).

12-47. VAN PIONEER TOOL KIT BRACKET REPLACEMENT

THIS TASK COVERS:

a. Removal **b. Installation**

INITIAL SETUP

APPLICABLE MODELS
M820A1 WO/W, M820A2 WO/W

MATERIALS/PARTS
Ten locknuts

REFERENCES (TM)
TM 9-2320-260-10
TM 9-2320-260-20P

EQUIPMENT CONDITION
Parking brake set (TM 9-2320-260-10).

a. Removal

1. Remove four locknuts (12), screws (2), washers (3), and tool kit bracket (1) from two mounting brackets (9). Discard locknuts (12).
2. Remove four locknuts (5), screws (8), three spacers (7), and two mounting brackets (9) from rail (6). Discard locknuts (5).
3. Remove two locknuts (11), screws (4), and support bracket (10) from rail (6). Discard locknuts (11).

b. Installation

1. Install support bracket (10) on rail (6) with two screws (4) and new locknuts (12).
2. Install two mounting brackets (9) on rail (6) with four screws (8), three spacers (7), and four new locknuts (5).
3. Install tool kit bracket (1) on two mounting brackets (9) with four screws (2), washers (3), and new locknuts (12).

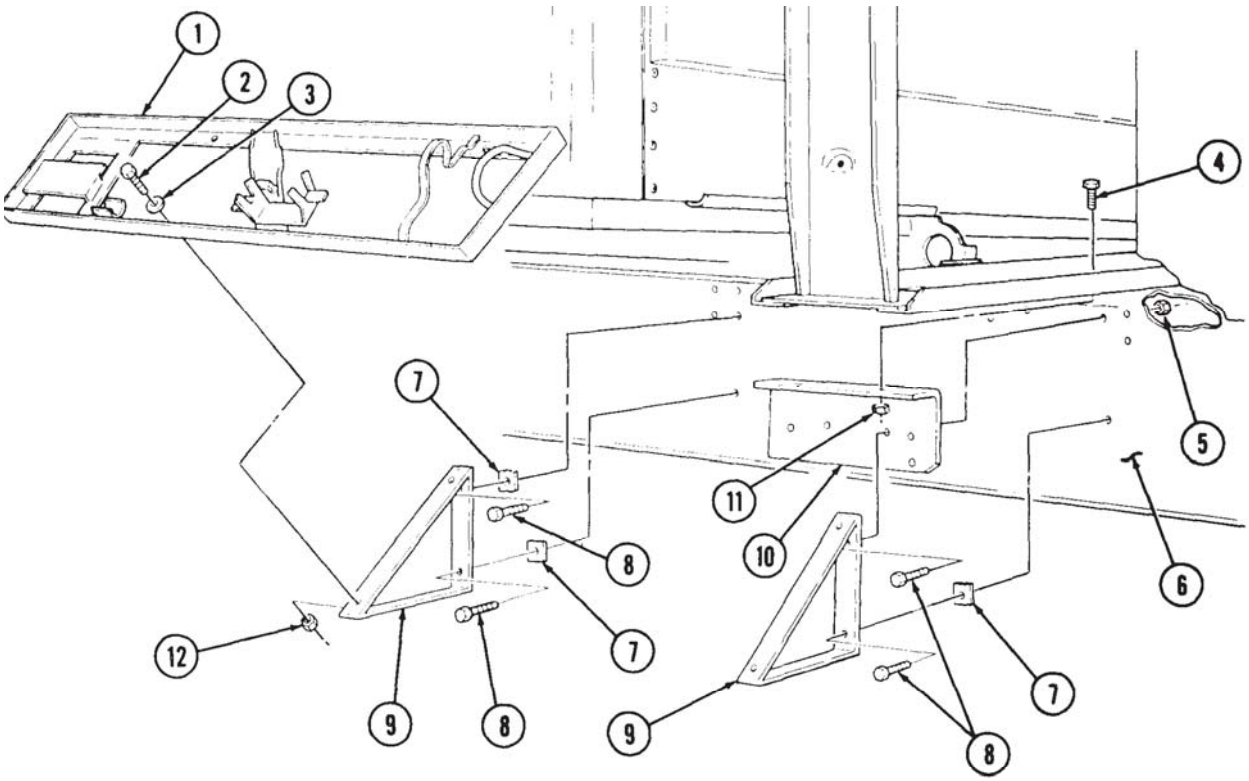

Section IV. WRECKER BODY MAINTENANCE

12-48. WRECKER BODY MAINTENANCE INDEX

PARA. NO.	TITLE	PAGE NO.
12-49.	Rear Splash Guard Replacement	12-102
12-50.	Front Splash Guard Replacement	12-104
12-51.	Taillight Bracket Replacement	12-106
12-52.	Outrigger Jack Replacement	12-108
12-53.	Vise and Mounting Bracket Replacement	12-110
12-54.	Fuel Can Brackets Replacement	12-111
12-55.	Wrecker Pioneer Tool Kit Bracket Replacement	12-112
12-56.	Deckplate Replacement	12-113
12-57.	Gondola Seat Cushions Replacement	12-114
12-58.	Wrecker Body Step Replacement	12-115

12-49. REAR SPLASH GUARD REPLACEMENT

THIS TASK COVERS:

a. Removal **b. Installation**

INITIAL SETUP

APPLICABLE MODELS
M816

MATERIALS/PARTS
Thirteen locknuts

REFERENCES (TM)
TM 9-2320-260-10
TM 9-2320-260-20P

EQUIPMENT CONDITION
Parking brake set (TM 9-2320-260-10).

a. Removal

1. Remove five locknuts (11), screws (10), retainer (8), and lower splash guard (9) from upper splash guard (13). Discard locknuts (11).
2. Remove two locknuts (12), screws (15), and braces (14) from upper splash guard (13). Discard locknuts (12).
3. Remove two locknuts (7), screws (5), washers (6), and braces (14) from frame (3). Discard locknuts (7).
4. Remove four locknuts (1), screws (4), two spacers (2), and upper splash guard (13) from frame (3). Discard locknuts (1).

b. Installation

1. Install two spacers (2) and upper splash guard (13) on frame (3) with four screws (4) and new locknuts (1).
2. Install two braces (14) on frame (3) with two screws (5), washers (6), and new locknuts (7).
3. Install two braces (14) on upper splash guard (13) with two screws (15) and new locknuts (12).
4. Install lower splash guard (9) and retainer (8) on upper splash guard (13) with five screws (10) and new locknuts (11).

12-49. REAR SPLASH GUARD REPLACEMENT (Contd)

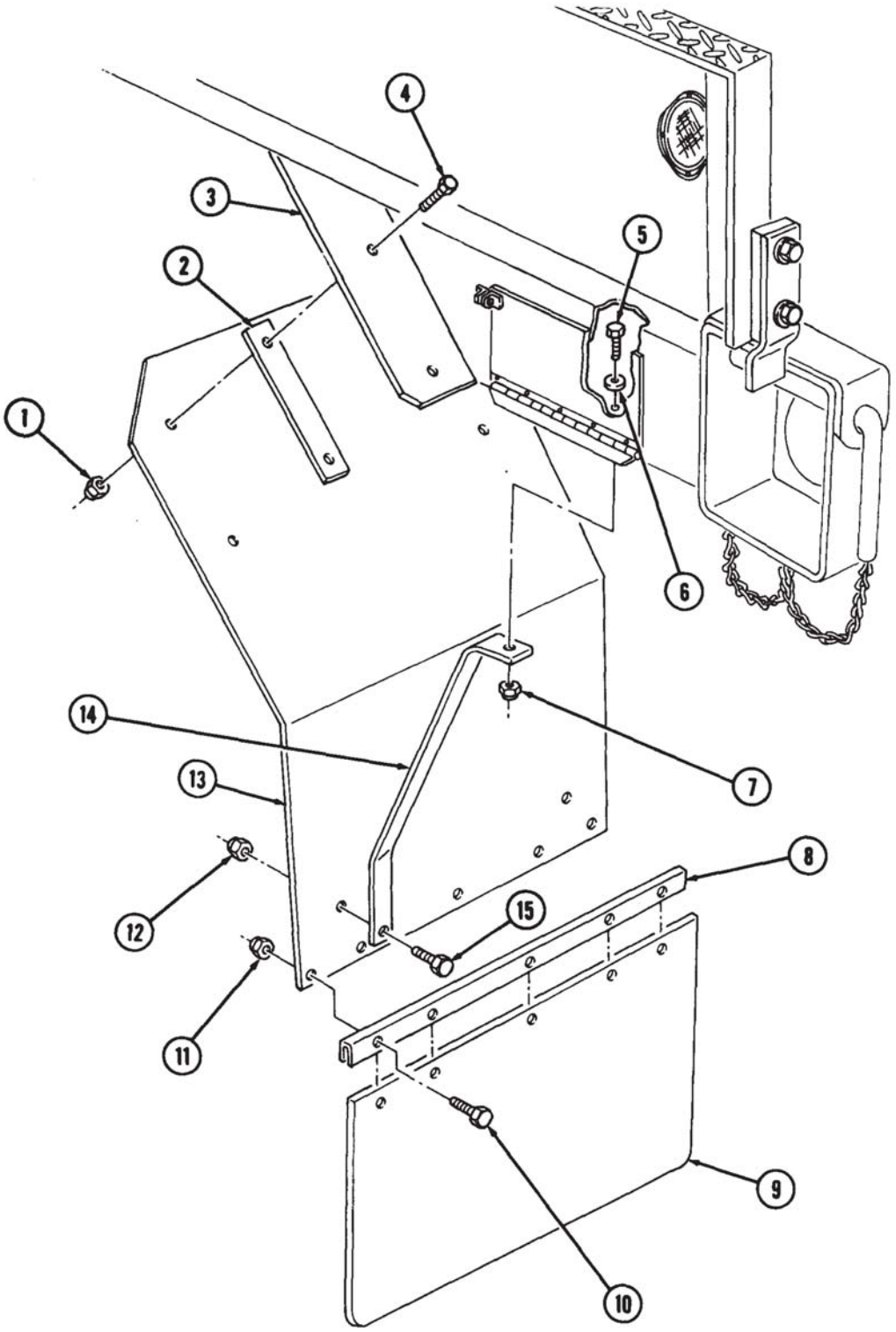

12-50. FRONT SPLASH GUARD REPLACEMENT

THIS TASK COVERS:

a. Removal **b. Installation**

INITIAL SETUP

APPLICABLE MODELS
M816

MATERIALS/PARTS
Seventeen locknuts

REFERENCES (TM)
TM 9-2320-260-10
TM 9-2320-260-20P

EQUIPMENT CONDITION
Parking brake set (TM 9-2320-260-10).

a. Removal

1. Remove five locknuts (11), screws (8), retainer (9), and lower splash guard (10) from upper splash guard (7). Discard locknuts (11).
2. Remove six locknuts (12), screws (6), and three brackets (13) from upper splash guard (7). Discard locknuts (12).
3. Remove three locknuts (1), screws (5), and brackets (13) from frame (3). Discard locknuts (1).
4. Remove three locknuts (4), screws (2), and upper splash guard (7) from frame (3). Discard locknuts (4).

b. Installation

1. Install upper splash guard (7) on frame (3) with three screws (2) and new locknuts (4).
2. Install three brackets (13) on frame (3) with three screws (5) and new locknuts (1).
3. Install three brackets (13) on upper splash guard (7) with six screws (6) and new locknuts (12).
4. Install lower splash guard (10) on upper splash guard (7) with retainer (9), five screws (8), and new locknuts (11).

12-50. FRONT SPLASH GUARD REPLACEMENT (Contd)

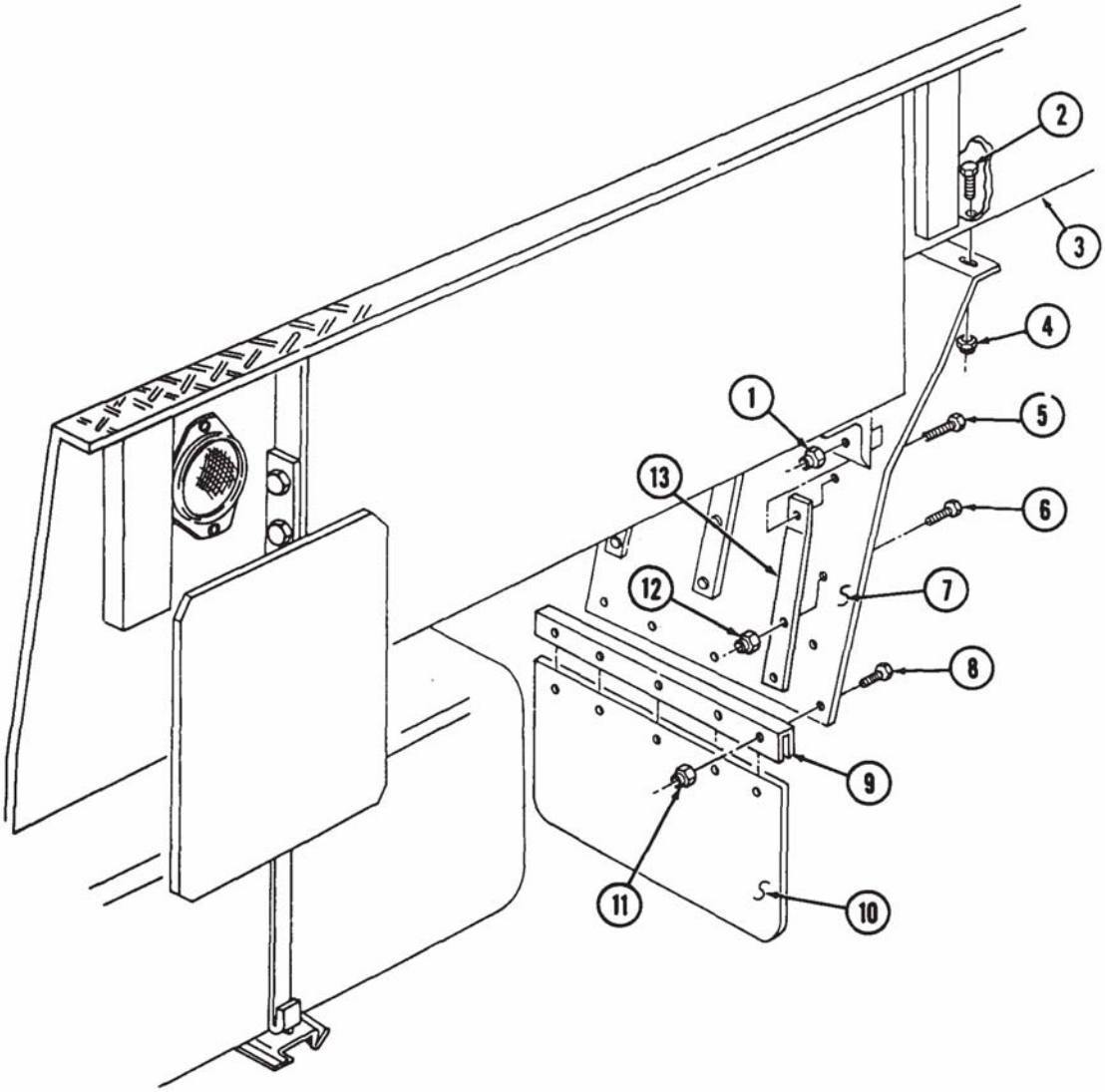

12-51. TAILLIGHT BRACKET REPLACEMENT

THIS TASK COVERS:

a. Removal **b. Installation**

INITIAL SETUP

APPLICABLE MODELS
M816

MATERIALS/PARTS
Two screw-assembled lockwashers
Four lockwashers
Two locknuts

REFERENCES (TM)
TM 9-2320-260-10
TM 9-2320-260-20P

EQUIPMENT CONDITION
- Parking brake set (TM 9-2320-260-10).
- Battery ground cable disconnected (para. 4-48).

a. Removal

NOTE
- Left and right taillight brackets are replaced the same way. This procedure covers the right taillight bracket.
- Tag all wires for installation.

1. Remove two nuts (6), lockwashers (7), screws (9), and reflector (8) from taillight guard (4). Discard lockwashers (7).
2. Remove four screws (5) and taillight guard (4) from bracket (11).
3. Disconnect four leads (12) from wires (10).
4. Remove two screw-assembled lockwashers (3) and housing (13) from bracket (11). Discard screw-assembled lockwashers (3).
5. Remove two locknuts (14), lockwashers (15), screws (2), and bracket (11) from ladder bracket (1). Discard locknuts (14) and lockwashers (15).

b. Installation

1. Install bracket (11) on ladder bracket (1) with two screws (2), new lockwashers (15), and new locknuts (14).
2. Install housing (13) on bracket (11) with two new screw-assembled lockwashers (3).
3. Insert four leads (12) through hole in bracket (11) and connect to four wires (10).
4. Install taillight guard (4) on bracket (11) with four screws (5).
5. Install reflector (8) on taillight guard (4) with two screws (9), new lockwashers (7), and nuts (6).

12-51. TAILLIGHT BRACKET REPLACEMENT (Contd)

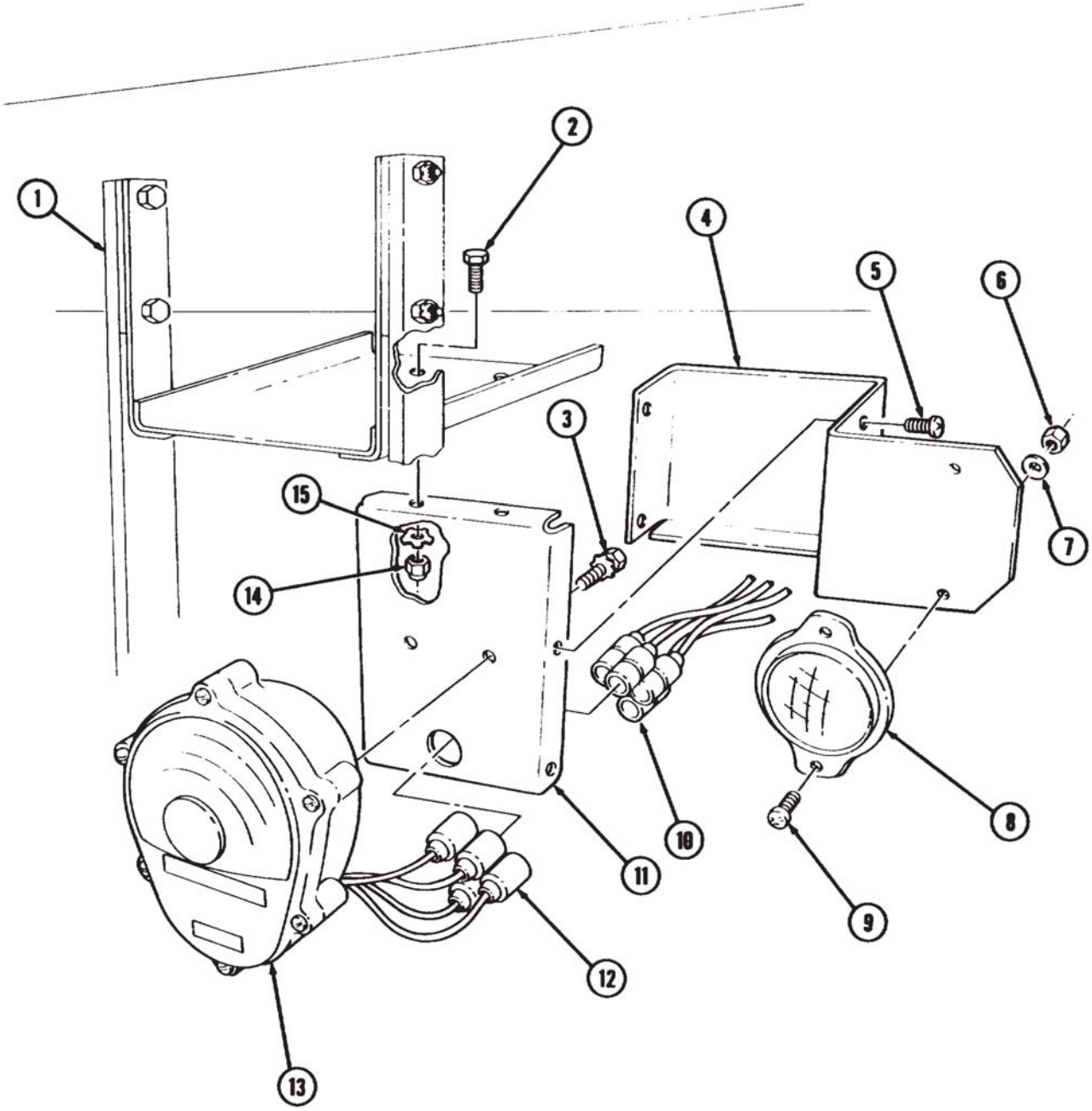

FOLLOW-ON TASK: Connect battery ground cable (para. 4-48).

12-52. OUTRIGGER JACK REPLACEMENT

THIS TASK COVERS:

a. Removal **b. Installation**

INITIAL SETUP

APPLICABLE MODELS
M816

MATERIALS/PARTS
Locking pin
Lockwasher
Pin
Locknut

REFERENCES (TM)
TM 9-2320-260-10
TM 9-2320-260-20P

EQUIPMENT CONDITION
- Parking brake set (TM 9-2320-260-10).
- Outrigger jacks extended (TM 9-2320-260-10).

a. Removal

NOTE

Front and rear outrigger jacks are replaced basically the same way. This procedure covers the rear outrigger jack.

1. Remove lockpin (15) and outrigger jack housing (5) from wrecker body (1).
2. Remove locking pin (6), pin (13), socket (14), and outrigger jack housing (5) from yoke (9). Discard locking pin (6).
3. Remove pin (8), collar (7), yoke (9), and washer (10) from adjusting screw (11). Discard pin (8).
4. Remove adjusting screw (11) from base (12).
5. Remove screw (2), lockwasher (3), and plate (4) from wrecker body (1). Discard lockwasher (3).

NOTE

Perform step 6 for front outrigger jacks.

6. Remove locknut (19), screw (17), washer (16), and plate (18) from wrecker body (1). Discard locknut (19).

b. Installation

NOTE

Perform step 1 for front outrigger jacks.

1. Install plate (18) on wrecker body (1) with washer (16), screw (17), and locknut (19).
2. Install plate (4) on wrecker body (1) with new lockwasher (3) and screw (2).
3. Install adjusting screw (11) in base (12).
4. Install washer (10) and yoke (9) on adjusting screw (11) with collar (7) and new pin (8).
5. Position socket (14) and outrigger jack housing (5) on yoke (9), and install with pin (13) and new locking pin (6).
6. Position outrigger jack housing (5) on wrecker body (1) and secure with lockpin (15).

12-52. OUTRIGGER JACK REPLACEMENT (Contd)

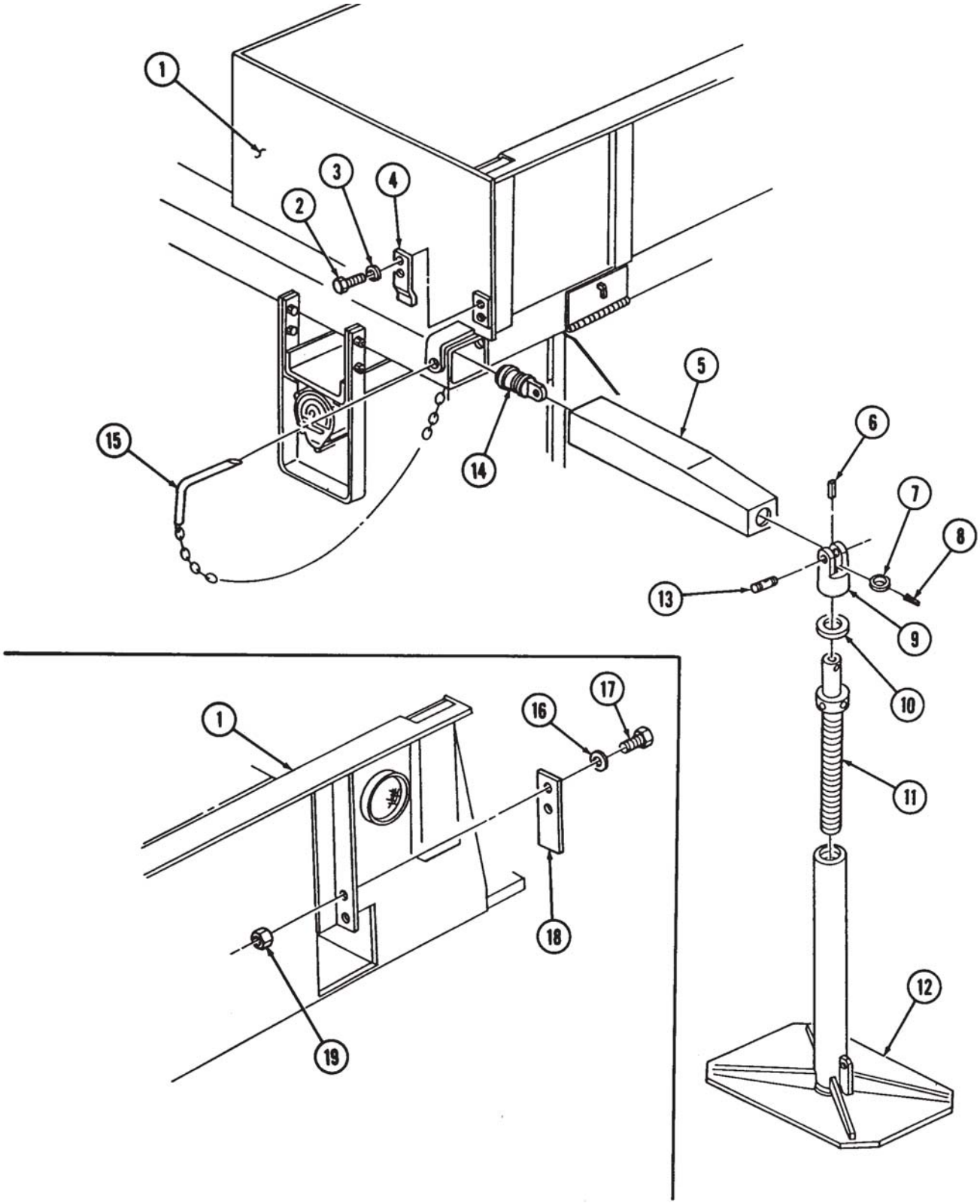

FOLLOW-ON TASK: Stow outrigger jacks (TM 9-2320-260-10).

12-53. VISE AND MOUNTING BRACKET REPLACEMENT

THIS TASK COVERS:

a. Removal

b. Installation

INITIAL SETUP

APPLICABLE MODELS
M816, M819

MATERIALS/PARTS
Eight locknuts

REFERENCES (TM)
TM 9-2320-260-10
TM 9-2320-260-20P

EQUIPMENT CONDITION
Parking brake set (TM 9-2320-260-10).

a. Removal

1. Remove four locknuts (5), screws (1), and vise (2) from vise bracket (4). Discard locknuts (5).
2. Remove four locknuts (7), screws (3), and vise bracket (4) from front bumper (6), frame extension (9), and upper plate (8). Discard locknuts (7).

b. Installation

1. Install vise bracket (4) on front bumper (6), upper plate (8), and frame extension (9) with four screws (3) and new locknuts (7).
2. Install vise (2) on vise bracket (4) with four screws (1) and new locknuts (5).

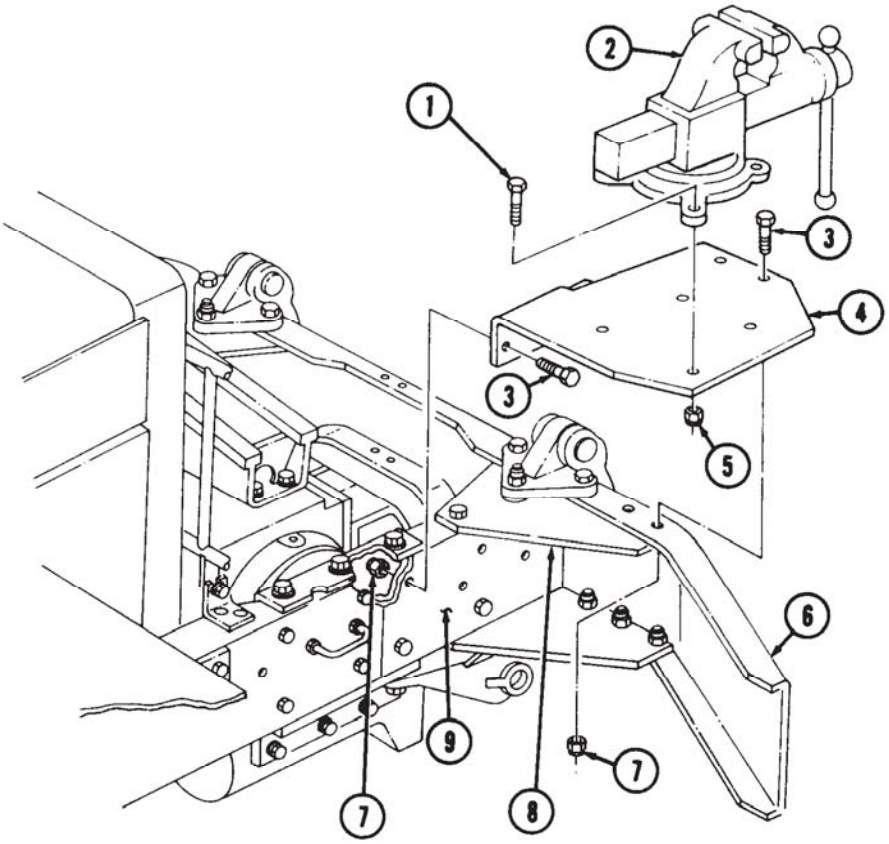

12-54. FUEL CAN BRACKETS REPLACEMENT

THIS TASK COVERS:

a. Removal **b. Installation**

INITIAL SETUP

APPLICABLE MODELS
M816

MATERIALS/PARTS
Eleven locknuts
Two lockwashers

REFERENCES (TM)
TM 9-2320-260-10
TM 9-2320-260-20P

EQUIPMENT CONDITION
Parking brake set (TM 9-2320-260-10).

a. Removal

1. Remove four locknuts (9), screws (2), and bracket assembly (3) from mounting bracket (7). Discard locknuts (9).
2. Remove two screws (4), lockwashers (5), and washers (6) from mounting bracket (7), angle bracket (10), and oil filter housing (12). Discard lockwashers (5).
3. Remove four locknuts (13), screws (14), and mounting bracket (7) from angle bracket (10). Discard locknuts (13).
4. Remove three locknuts (11), screws (8), and angle bracket (10) from fuel can (1). Discard locknuts (11).

b. Installation

1. Install angle bracket (10) on fuel can (1) with three screws (8) and new locknuts (11).
2. Install mounting bracket (7) on angle bracket (10) with four screws (14) and new locknuts (13).
3. Install two screws (4), new lockwashers (5), and washers (6) on mounting bracket (7), angle bracket (10), and oil filter housing (12).
4. Install bracket assembly (3) on mounting bracket (7) with four screws (2) and new locknuts (9).

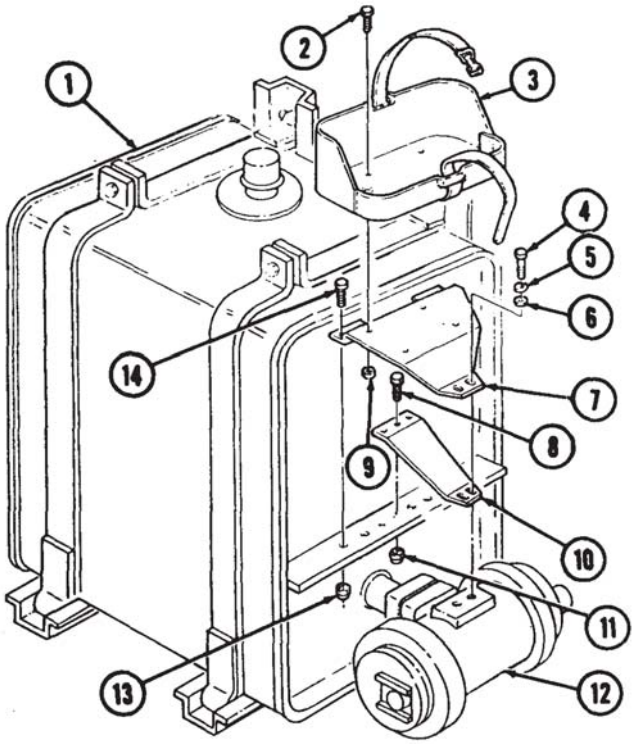

12-55. WRECKER PIONEER TOOL KIT BRACKET REPLACEMENT

THIS TASK COVERS:

a. Removal **b. Installation**

INITIAL SETUP

APPLICABLE MODELS
M819

MATERIALS/PARTS
Two locknuts

REFERENCES (TM)
TM 9-2320-260-10
TM 9-2320-260-20P

EQUIPMENT CONDITION
Parking brake set (TM 9-2320-260-10).

a. Removal

Remove two locknuts (1), screws (4), washers (5), and tool kit bracket (2) from frame (3). Discard locknuts (1).

b. Installation

Install tool kit bracket (2) on frame (3) with two washers (5), screws (4), and new locknuts (1).

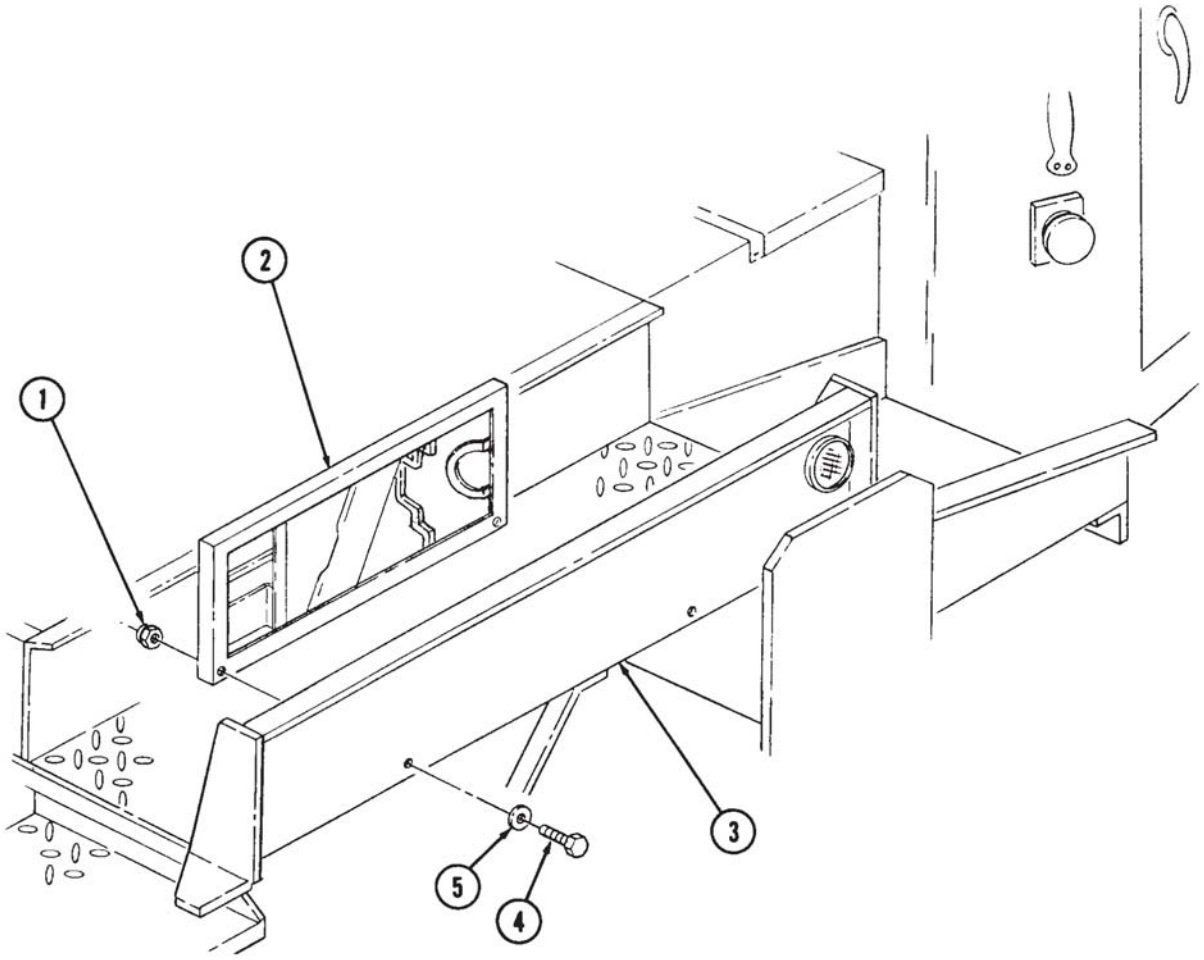

12-56. DECKPLATE REPLACEMENT

THIS TASK COVERS:

a. Removal **b. Installation**

INITIAL SETUP

APPLICABLE MODELS
M816

MATERIALS/PARTS
Six lockwashers

REFERENCES (TM)
TM 9-2320-260-10
TM 9-2320-260-20P

EQUIPMENT CONDITION
Parking brake set (TM 9-2320-260-10).

NOTE

The front and rear deckplates are replaced basically the same way. This procedure covers the rear deckplate only.

a. Removal

Remove six screws (1), lockwashers (2), washers (3), and plate (4) from underbody assembly (5). Discard lockwashers (2).

b. Installation

Install plate (4) on underbody assembly (5) with six washers (3), new lockwashers (2), and screws (1).

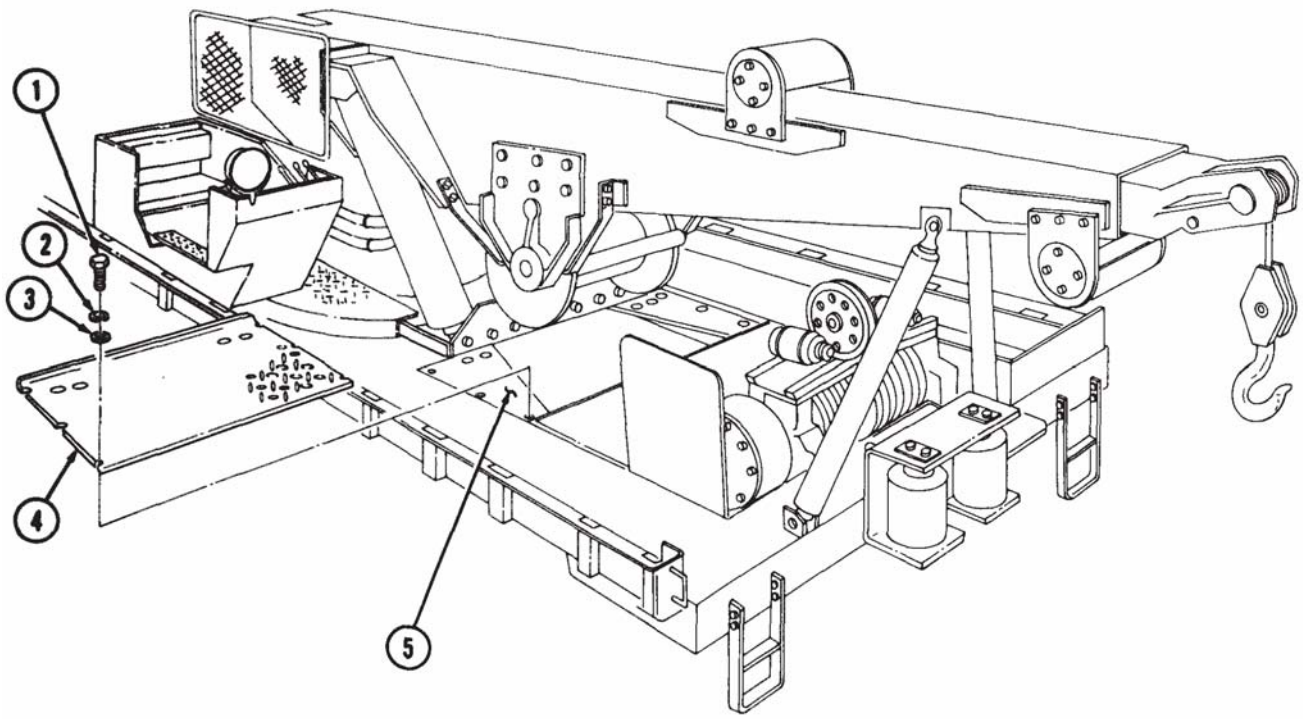

12-57. GONDOLA SEAT CUSHIONS REPLACEMENT

THIS TASK COVERS:

a. Removal **b. Installation**

INITIAL SETUP

APPLICABLE MODELS
M816

MATERIALS/PARTS
Four lockwashers

REFERENCES (TM)
TM 9-2320-260-10
TM 9-2320-260-20P

EQUIPMENT CONDITION
Parking brake set (TM 9-2320-260-10).

a. Removal

1. Remove two screws (1), lockwashers (2), and seat back cushion (3) from gondola (7). Discard lockwashers (2).
2. Remove two screws (5), lockwashers (6), and seat bottom cushion (4) from gondola (7). Discard lockwashers (6).

b. Installation

1. Install seat back cushion (3) on gondola (7) with two screws (1) and new lockwashers (2).
2. Install seat bottom cushion (4) on gondola (7) with two screws (5) and new lockwashers (6).

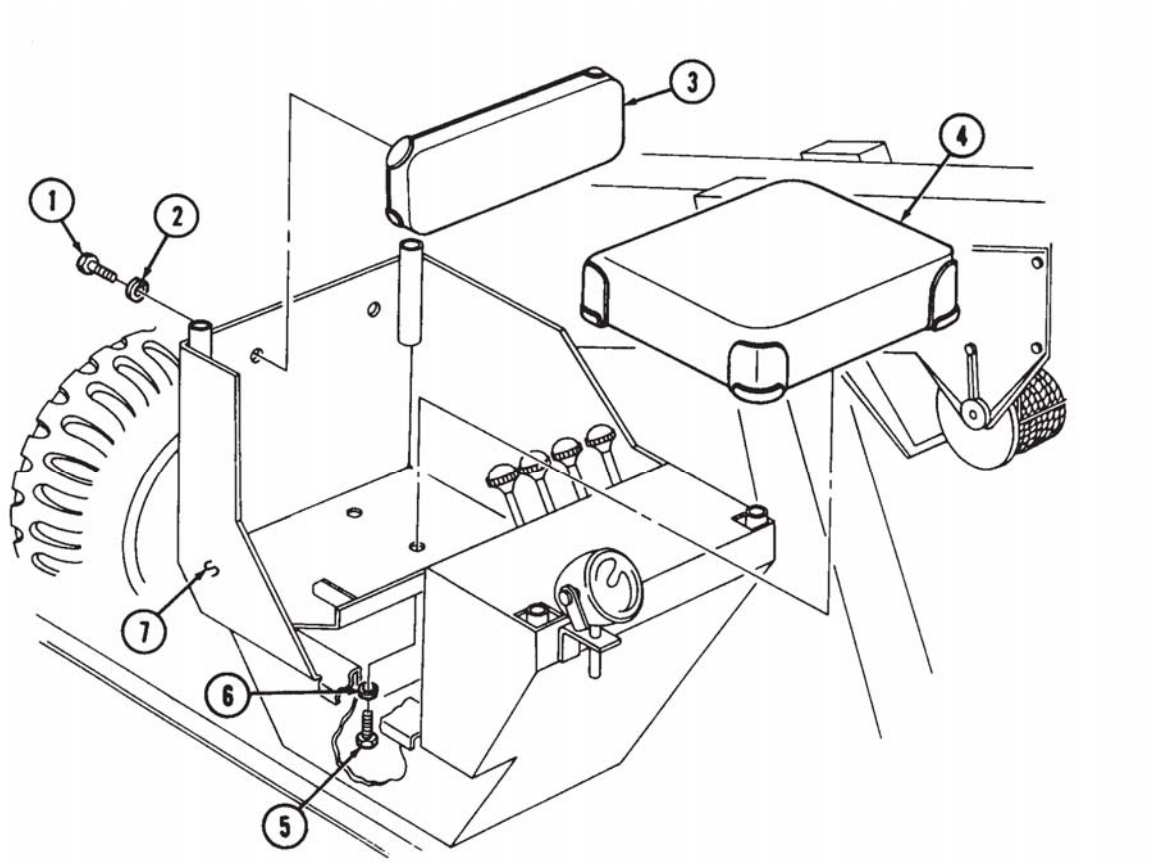

12-58. WRECKER BODY STEP REPLACEMENT

THIS TASK COVERS:

a. Removal **b. Installation**

INITIAL SETUP

APPLICABLE MODELS
M816

MATERIALS/PARTS
Two locknuts

REFERENCES (TM)
TM 9-2320-260-10
TM 9-2320-260-20P

EQUIPMENT CONDITION
Parking brake set (TM 9-2320-260-10).

a. Removal

Remove two locknuts (4), washers (3), pin (2), and step (1) from bracket (6) and wrecker body (5). Discard locknuts (4).

b. Installation

Install step (1) on bracket (6) and wrecker body (5) with pin (2), two washers (3), and new locknuts (4).

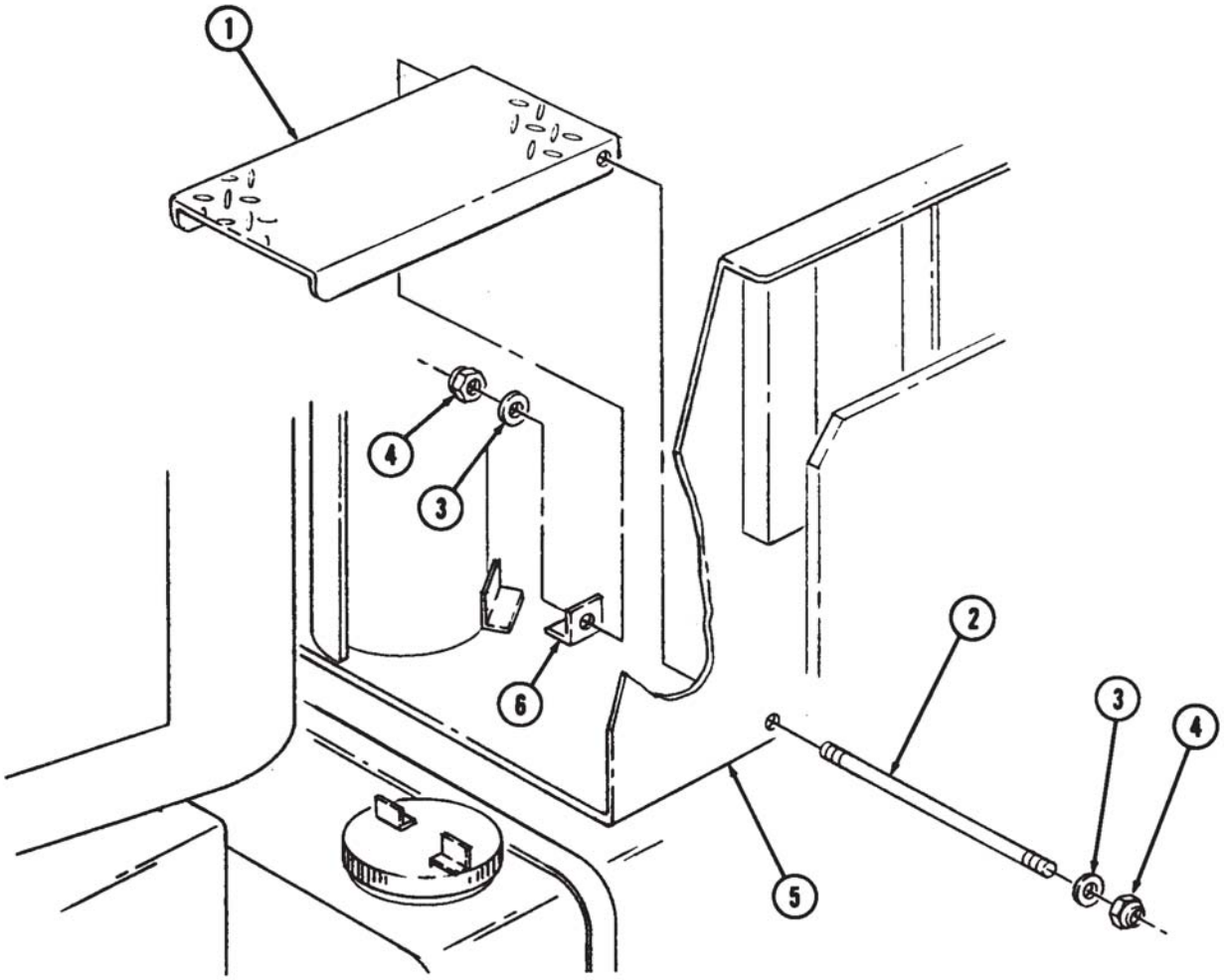

Section V. TRACTOR WRECKER BODY MAINTENANCE

12-59. TRACTOR WRECKER BODY MAINTENANCE INDEX

PARA. NO.	TITLE	PAGE NO.
12-60.	Front Splash Guard Replacement	12-116
12-61.	Rear Splash Guard Replacement	12-118
12-62.	Tractor Wrecker Body Step Replacement	12-119
12-63.	Tractor Wrecker Outrigger and Jack Replacement	12-120

12-60. FRONT SPLASH GUARD REPLACEMENT

THIS TASK COVERS:

a. Removal **b. Installation**

INITIAL SETUP

APPLICABLE MODELS
M819

MATERIALS/PARTS
Six lockwashers

REFERENCES (TM)
TM 9-2320-260-10
TM 9-2320-260-20P

EQUIPMENT CONDITION
Parking brake set (TM 9-2320-260-10).

a. Removal

1. Remove four nuts (3), lockwashers (4), screws (6), and splash guard (7) from two mounting brackets (8) and mounting bracket (5). Discard lockwashers (4).
2. Remove two nuts (9), lockwashers (10), screws (2), and mounting brackets (8) from wrecker body (1). Discard lockwashers (10).

b. Installation

1. Install two mounting brackets (8) on wrecker body (1) with two screws (2), new lockwashers (10), and nuts (9).
2. Install splash guard (7) on mounting bracket (5) and two mounting brackets (8) with four screws (6), new lockwashers (4), and nuts (3).

12-60. FRONT SPLASH GUARD REPLACEMENT (Contd)

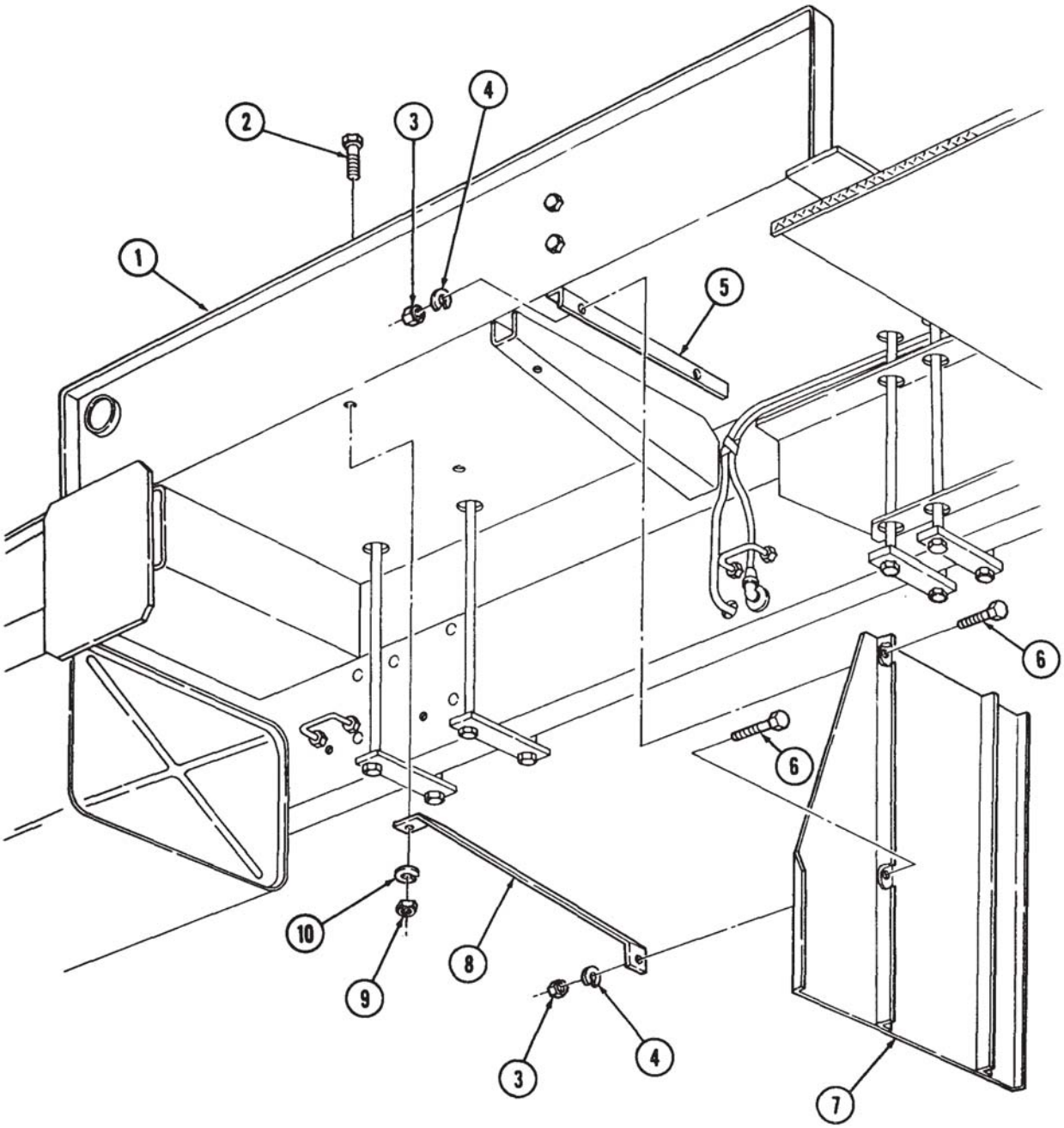

12-61. REAR SPLASH GUARD REPLACEMENT

THIS TASK COVERS:

a. Removal **b. Installation**

INITIAL SETUP

APPLICABLE MODELS
M819

MATERIALS/PARTS
Five lockwashers

REFERENCES (TM)
TM 9-2320-260-10
TM 9-2320-260-20P

EQUIPMENT CONDITION
Parking brake set (TM 9-2320-260-10).

a. Removal

Remove five nuts (7), lockwashers (6), washers (2), screws (3), retainer (4), and splash guard (5) from wrecker body (1). Discard lockwashers (6).

b. Installation

Install splash guard (5) on wrecker body (1) with retainer (4), five washers (2), screws (3), new lockwashers (6), and nuts (7).

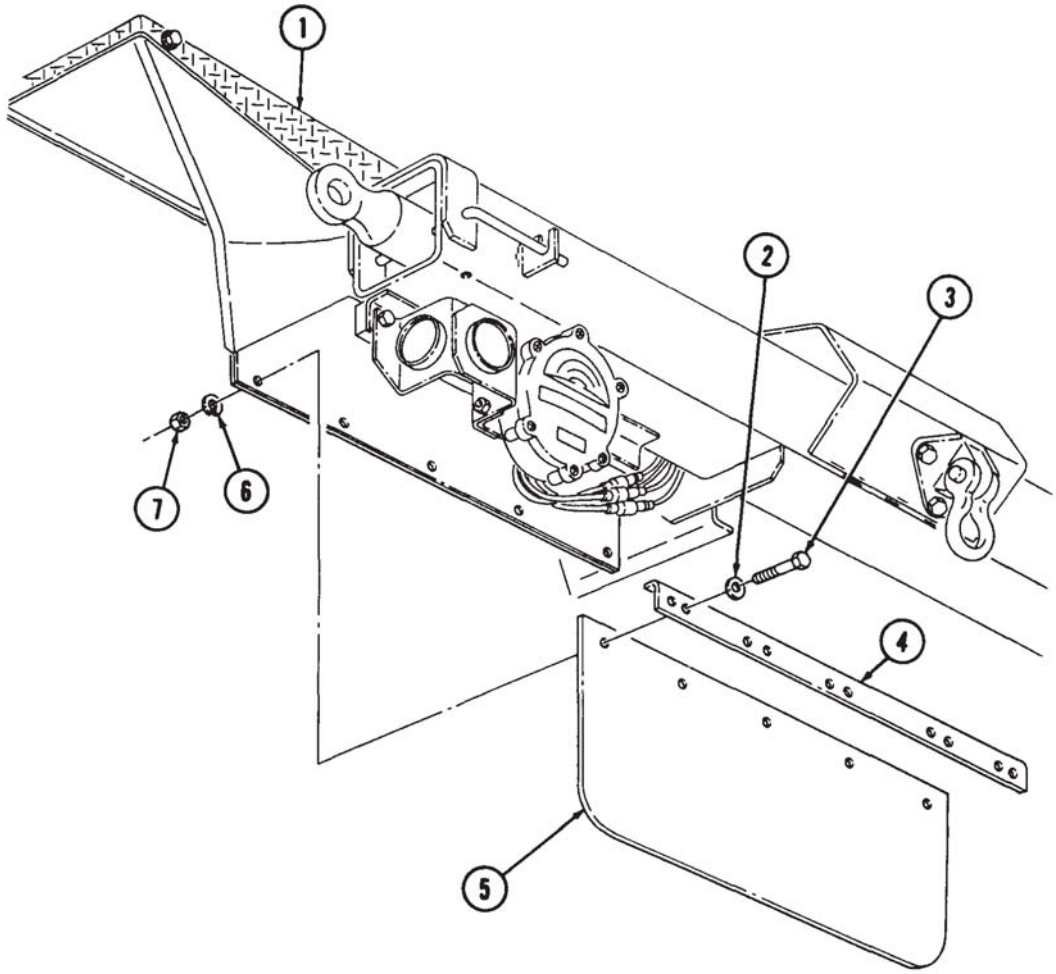

12-62. TRACTOR WRECKER BODY STEP REPLACEMENT

THIS TASK COVERS:

a. Removal

b. Installation

INITIAL SETUP

APPLICABLE MODELS
M819

MATERIALS/PARTS
Two lockwashers

REFERENCES (TM)
TM 9-2320-260-10
TM 9-2320-260-20P

EQUIPMENT CONDITION
Parking brake set (TM 9-2320-260-10).

a. Removal

Remove nut (6), two lockwashers (3), pin (2), and step (1) from bracket (5) and wrecker body (4). Discard lockwashers (3).

b. Installation

Install step (1) on bracket (5) and wrecker body (4) with pin (2), two new lockwashers (3), and nut (6).

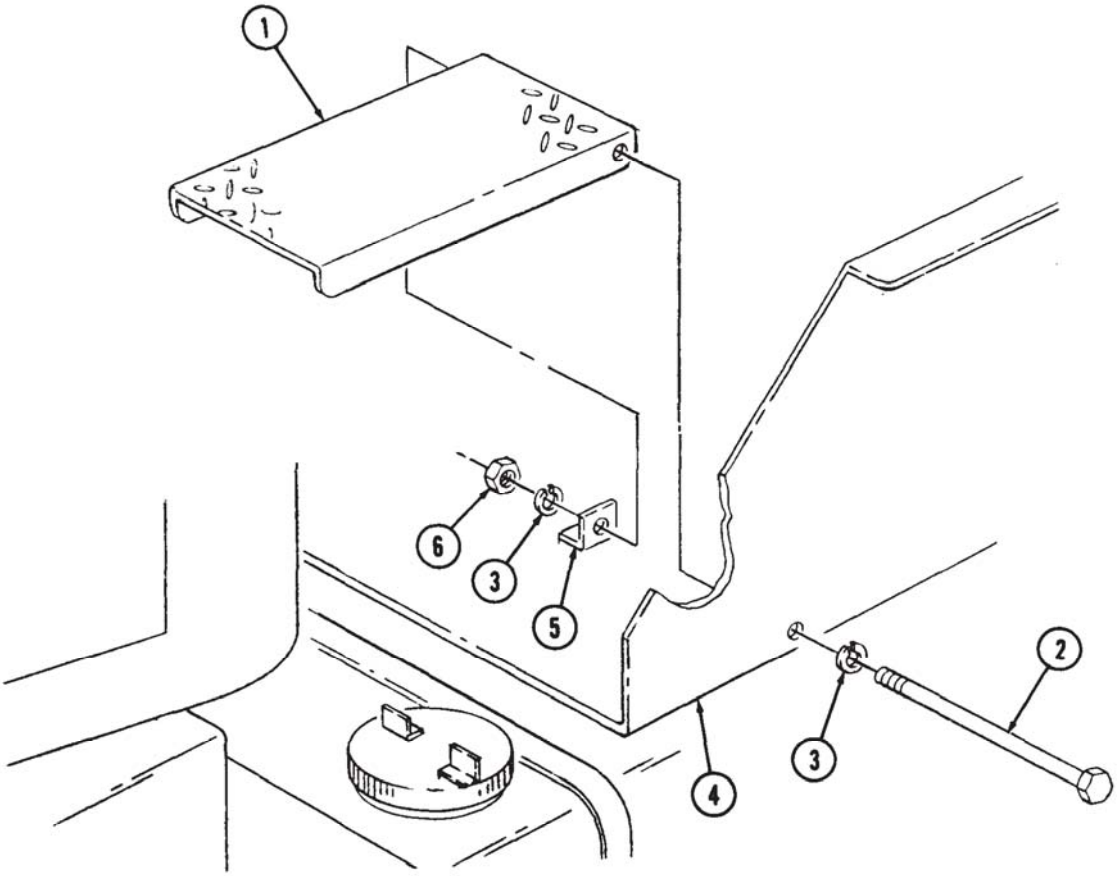

12-63. TRACTOR WRECKER OUTRIGGER JACK REPLACEMENT

THIS TASK COVERS:

a. Removal **b. Installation**

INITIAL SETUP

APPLICABLE MODELS
M819

MATERIALS/PARTS
Locking pin
Lockwasher
Pin

REFERENCES (TM)
TM 9-2320-260-10
TM 9-2320-260-20P

EQUIPMENT CONDITION
- Parking brake set (TM 9-2320-260-10).
- Outrigger jacks extended (TM 9-2320-260-10).

a. Removal

NOTE

Front and rear outrigger jacks are replaced basically the same way. This procedure covers the rear outrigger jack.

1. Remove lockpin (15) and outrigger jack housing (5) from wrecker body (1).
2. Remove locking pin (6), pin (13), yoke (9), and outrigger jack housing (5) from socket (14). Discard locking pin (6).
3. Remove pin (8), collar (7), yoke (9), and washer (10) from adjusting screw (11). Discard pin (8).
4. Remove adjusting screw (11) from base (12).
5. Remove screw (2), lockwasher (3), and plate (4) from wrecker body (1). Discard lockwasher (3).

b. Installation

1. Install plate (4) on wrecker body (1) with new lockwasher (3) and screw (2).
2. Install adjusting screw (11) in base (12).
3. Install washer (10) and yoke (9) on adjusting screw (11) with collar (7) and new pin (8).
4. Position socket (14) and outrigger jack housing (5) on yoke (9) and install with pin (13) and new locking pin (6).
5. Position outrigger jack housing (5) on wrecker body (1) and secure with lockpin (15).

12-63. TRACTOR WRECKER OUTRIGGER JACK REPLACEMENT (Contd)

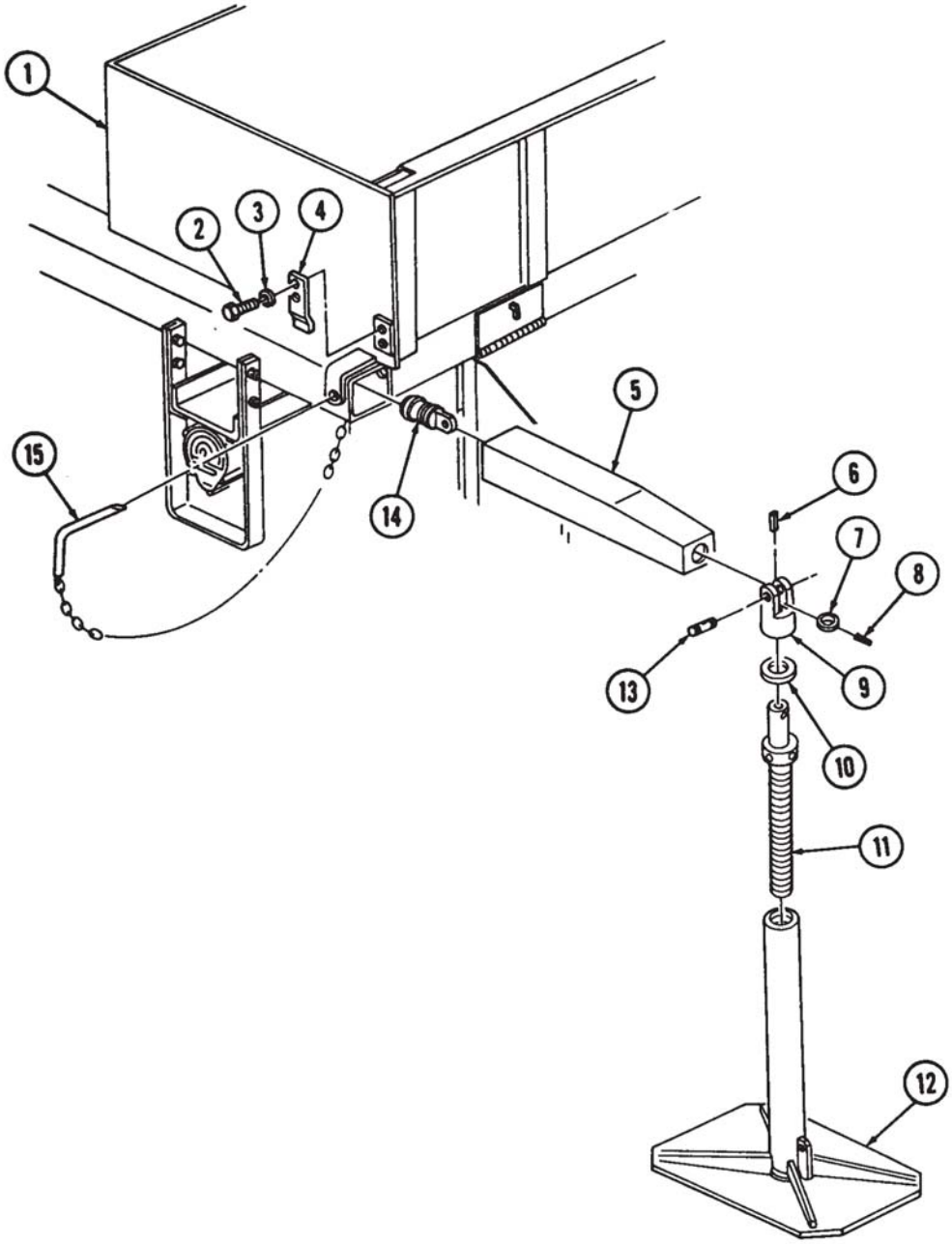

FOLLOW-ON TASK: Stow outrigger jacks (TM 9-2320-260-10).

Section VI. BOLSTER BODY MAINTENANCE

12-64. BOLSTER BODY MAINTENANCE INDEX

PARA. NO.	TITLE	PAGE NO.
12-65.	Spare Tire Carrier Replacement	12-122
12-66.	Bolster Pioneer Tool Kit Bracket Replacement	12-124
12-67.	Trailer Carrier Replacement	12-125
12-68.	Cab Protector Maintenance	12-126
12-69.	Bolster Replacement	12-128

12-65. SPARE TIRE CARRIER REPLACEMENT

THIS TASK COVERS:

a. Removal **b. Installation**

INITIAL SETUP

APPLICABLE MODELS
M815

MATERIALS/PARTS
Sixteen locknuts

PERSONNEL REQUIRED
Two

REFERENCES (TM)
TM 9-2320-260-10
TM 9-2320-260-20P

EQUIPMENT CONDITION
- Parking brake set (TM 9-2320-260-10).
- Spare tire removed (TM 9-2320-260-10).

a. Removal

1. Remove two locknuts (4), screws (1), and angle brackets (2) from bracket (3). Discard locknuts (4).
2. Remove two locknuts (16) and (6), screws (7) and (9), and two braces (23) from bracket (3) and spare tire carrier base (8). Discard locknuts (6) and (16).
3. Remove two locknuts (22), screws (15), and bracket (3) from spare tire carrier base (8). Discard locknuts (22).
4. Remove two locknuts (12) and (19), screws (5) and (21), and spare tire carrier base (8) from brackets (11) and (18). Discard locknuts (12) and (19).
5. Remove two locknuts (14) and (17), screws (10) and (20), and brackets (11) and (18) from frame (13). Discard locknuts (14) and (17).

12-65. SPARE TIRE CARRIER REPLACEMENT (Contd)

b. Installation

1. Install two brackets (11) and (18) on frame (13) with four screws (10) and (20) and new locknuts (14) and (17).
2. Install spare tire carrier base (8) on two brackets (11) and (18) with four screws (5) and (21) and new locknuts (12) and (19).
3. Install bracket (3) on spare tire carrier base (8) with two screws (15) and new locknuts (22).
4. Install two braces (23) on spare tire carrier base (8) and bracket (3) with four screws (7) and (9) and new locknuts (6) and (16).
5. Install two angle brackets (2) on bracket (3) with four screws (1) and new locknuts (4).

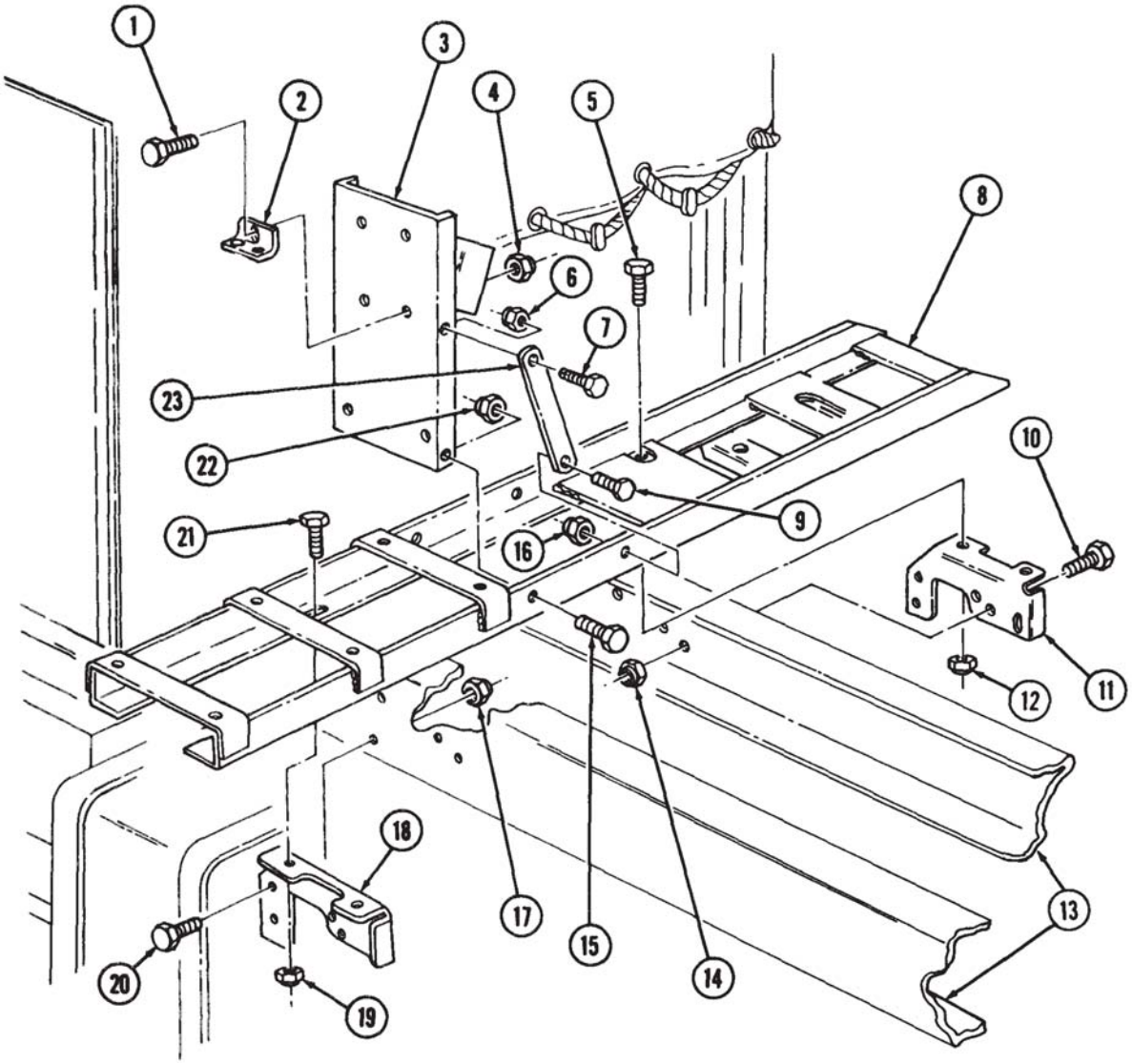

FOLLOW-ON TASK: Install spare tire (TM 9-2320-260-10).

12-66. BOLSTER PIONEER TOOL KIT BRACKET REPLACEMENT

THIS TASK COVERS:

a. Removal **b. Installation**

INITIAL SETUP

APPLICABLE MODELS
M815

MATERIALS/PARTS
Three locknuts

REFERENCES (TM)
TM 9-2320-260-10
TM 9-2320-260-20P

EQUIPMENT CONDITION
Parking brake set (TM 9-2320-260-10).

a. Removal

Remove three locknuts (2), screws (4), and pioneer tool kit bracket (3) from spare tire carrier frame (1). Discard locknuts (2).

b. Installation

Install pioneer tool kit bracket (3) on spare tire carrier frame (1) with three screws (4) and new locknuts (2).

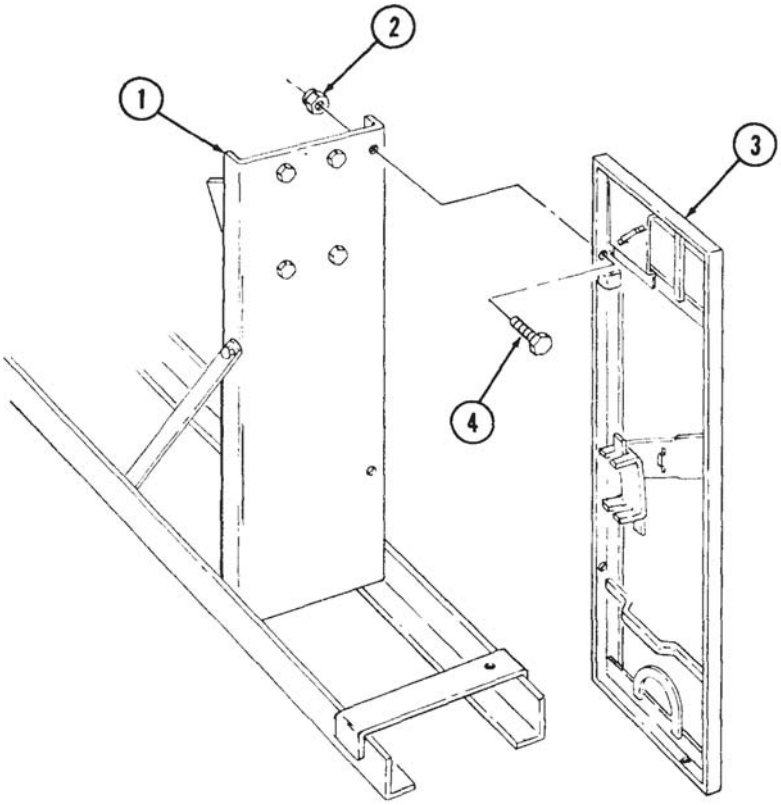

12-67. TRAILER CARRIER REPLACEMENT

THIS TASK COVERS:

a. Removal b. Installation

INITIAL SETUP

APPLICABLE MODELS
M815

MATERIALS/PARTS
Twelve locknuts

REFERENCES (TM)
TM 9-2320-260-10
TM 9-2320-260-20P

EQUIPMENT CONDITION
- Parking brake set (TM 9-2320-260-10).
- Rear composite lights removed (para. 4-45).

a. Removal

1. Remove four locknuts (5), screws (1), and front trailer carrier (2) from frame (7). Discard locknuts (5).
2. Remove eight locknuts (4), screws (6), and rear trailer carrier (3) from frame (7). Discard locknuts (4).

b. Installation

1. Install rear trailer carrier (3) on frame (7) with eight screws (6) and new locknuts (4).
2. Install front trailer carrier (2) on frame (7) with four screws (1) and new locknuts (5).

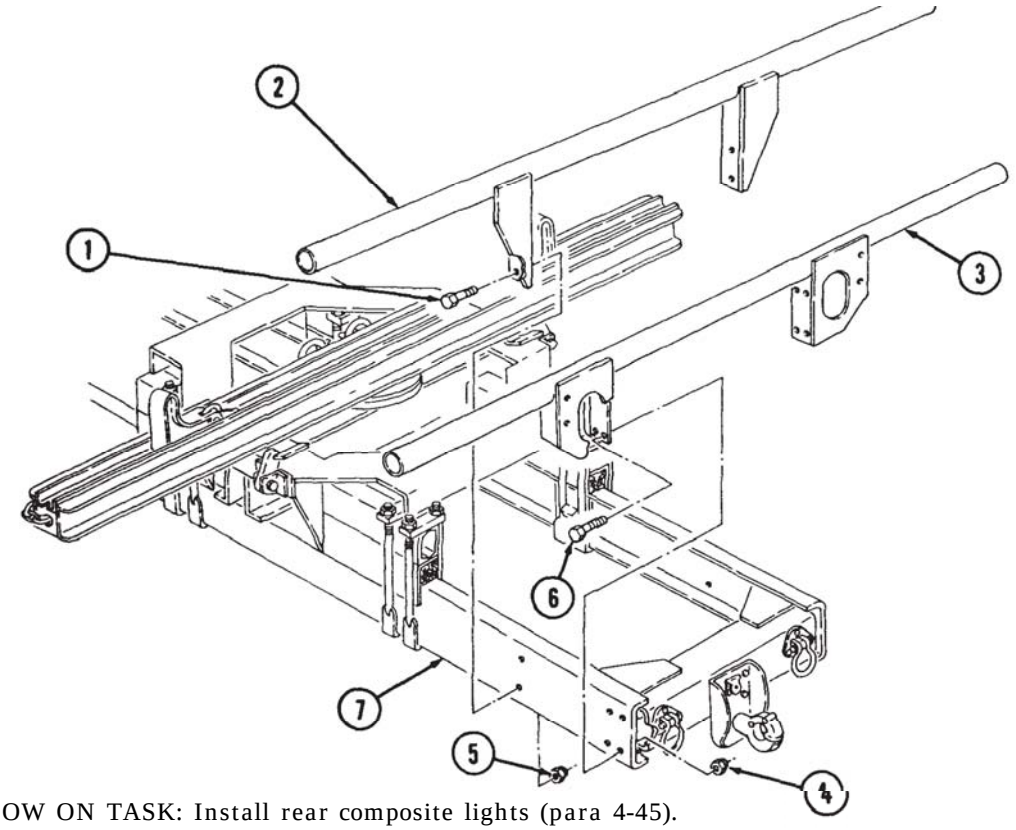

FOLLOW ON TASK: Install rear composite lights (para 4-45).

12-68. CAB PROTECTOR MAINTENANCE

THIS TASK COVERS:

a. Removal
b. Disassembly
c. Cleaning and Inspection
d. Assembly
e. Installation

INITIAL SETUP

APPLICABLE MODELS
M815

MATERIALS/PARTS
Sixty-four locknuts

PERSONNEL REQUIRED
Two

REFERENCES (TM)
TM 9-2320-260-10
TM 9-2320-260-20P

EQUIPMENT CONDITION
- Parking brake set (TM 9-2320-260-10).
- Midwinch removed (para. 13-12).
- Ramps removed (TM 9-2320-260-10).

GENERAL SAFETY INSTRUCTIONS
All personnel must stand clear during lifting operations.

a. Removal

1. Install chain on cab protector (3).
2. Install lifting device on chain. Remove slack from chain.
3. Remove sixteen locknuts (9) and screws (7) from cab protector (3) and frame (8). Discard locknuts (9).

WARNING

All personnel must stand clear during lifting operations. A swinging or shifting load may cause injury or death to personnel.

4. Raise cab protector (3) from frame (8) and lower onto supports.
5. Remove lifting device from chain.
6. Remove chain from cab protector (3).

b. Disassembly

1. Remove twenty-four locknuts (6), screws (4), and six wood boards (5) from cab protector (3). Discard locknuts (6).
2. Remove twenty-four locknuts (10), screws (1), and three wood boards (2) from cab protector (3). Discard locknuts (10).

c. Cleaning and Inspection

1. Clean cab protector (3).
2. Inspect cab protector (3) for cracks, breaks, and rust. Replace cab protector (3) if cracked, broken, or rusted.
3. Inspect nine wood boards (2) and (5) for split ends or severe rot. Replace boards (2) or (5) if damaged.

12-68. CAB PROTECTOR MAINTENANCE (Contd)

d. Assembly

1. Install three wood boards (2) on cab protector (3) with twenty-four screws (1) and new locknuts (10).
2. Install six wood boards (5) on cab protector (3) with twenty-four screws (4) and new locknuts (6).

e. Installation

1. Install chain on cab protector (3).
2. Install lifting device on chain.

WARNING

All personnel must stand clear during lifting operations. A swinging or shifting load may cause injury or death to personnel.

3. Raise cab protector (3) and position on frame (8).
4. Install cab protector (3) on frame (8) with sixteen screws (7) and new locknuts (9).
5. Remove lifting device on chain.
6. Remove chain from cab protector (3).

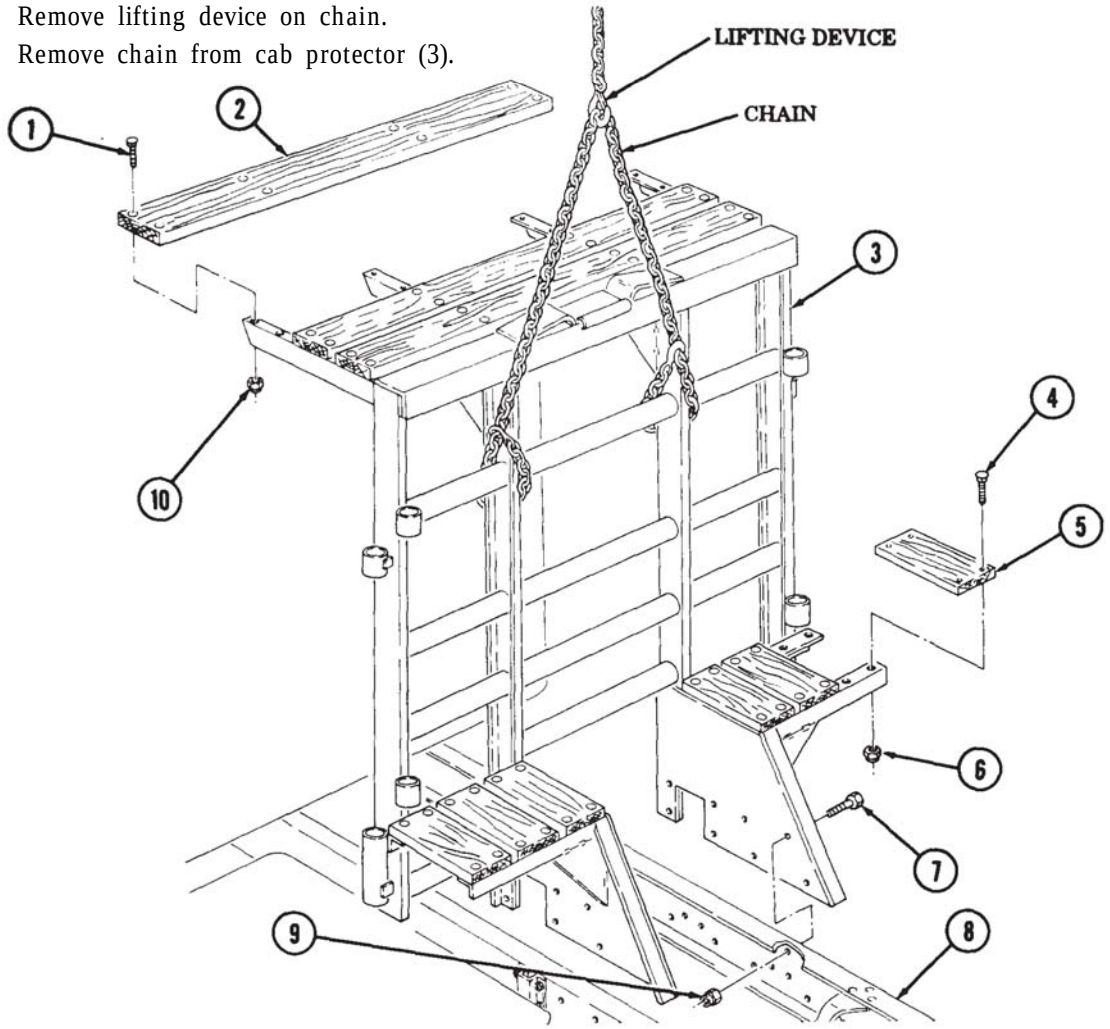

FOLLOW-ON TASKS:
- Install midwinch (para. 13-12).
- Install ramps in stowed position (TM 9-2320-260-10).

12-69. BOLSTER REPLACEMENT

THIS TASK COVERS:

a. Removal **b. Installation**

INITIAL SETUP

APPLICABLE MODELS
M815

MATERIALS/PARTS
Cotter pin

PERSONNEL REQUIRED
Two

REFERENCES (TM)
LO 9-2320-260-12
TM 9-2320-260-10
TM 9-2320-260-20P

EQUIPMENT CONDITION
Parking brake set (TM 9-2320-260-10).

GENERAL SAFETY INSTRUCTIONS
All personnel must stand clear during lifting operations.

a. Removal

1. Remove grease fitting (1) from kingpin (2).
2. Remove cotter pin (6), nut (5), and kingpin (2) from bolster (3) and fifth wheel (4). Discard cotter pin (6).
3. Install chain on bolster (3).
4. Install lifting device on chain.

WARNING

All personnel must stand clear during lifting operations. A swinging or shifting load may cause injury or death to personnel.

5. Raise bolster (3) and lower onto supports.
6. Remove lifting device from chain.
7. Remove chain from bolster (3).

b. Installation

1. Install chain on bolster (3).
2. Install lifting device on chain.

WARNING

All personnel must stand clear during lifting operations. A swinging or shifting load may cause injury or death to personnel.

3. Raise and position bolster (3) on fifth wheel (4).
4. Remove lifting device from chain.
5. Remove chain from bolster (3).
6. Install kingpin (2) in bolster (3) and fifth wheel (4) with nut (5).
7. Install new cotter pin (6) in nut (5) and kingpin (2).
8. Install grease fitting (1) on kingpin (2).

12-69. BOLSTER REPLACEMENT (Contd)

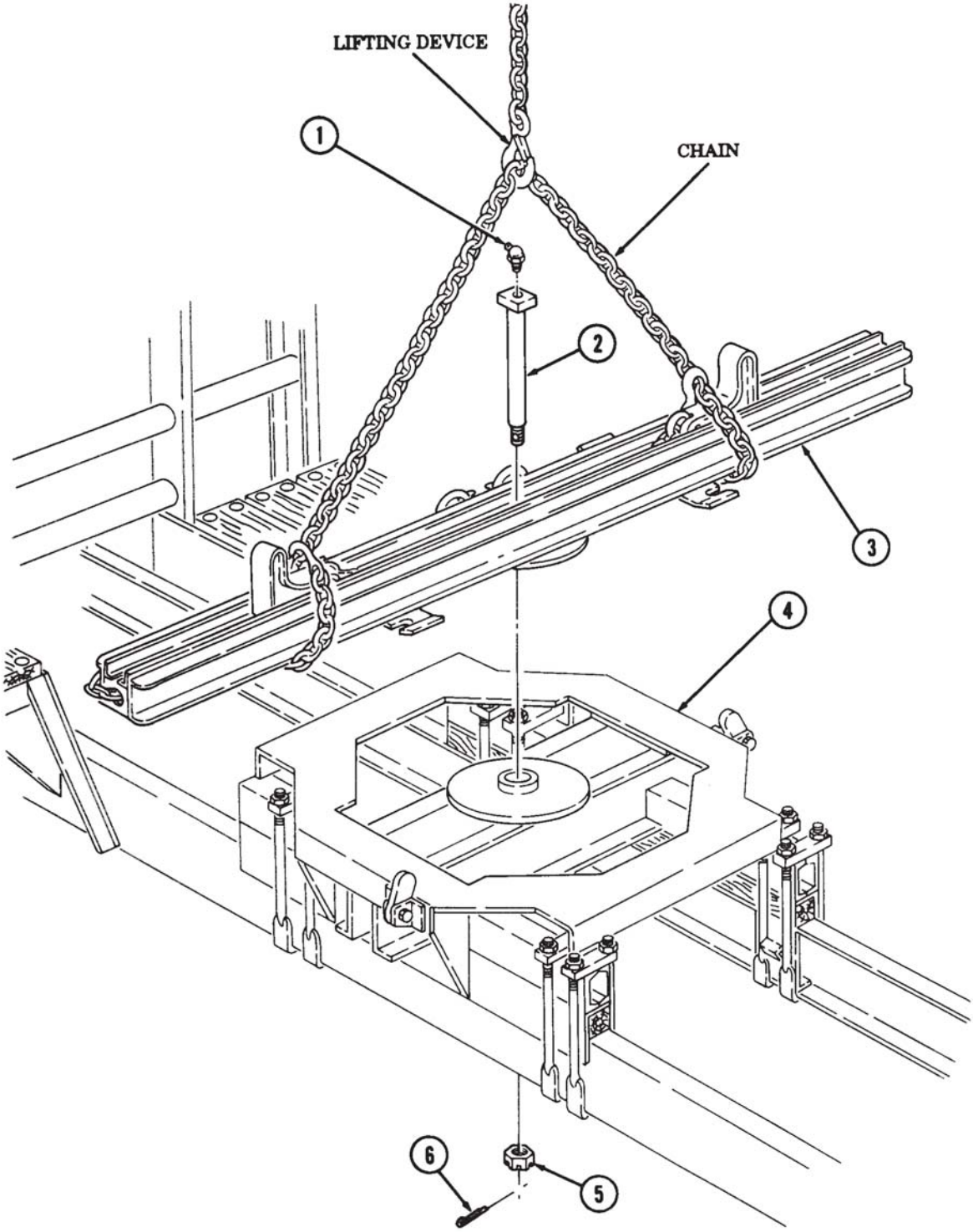

FOLLOW-ON TASK: Lubricate kingpin (LO 9-2320-260-12).

Section VII. TRACTOR BODY MAINTENANCE

12-70. TRACTOR BODY MAINTENANCE INDEX

PARA. NO.	TITLE	PAGE NO.
12-71.	Spare Tire Carrier Replacement	12-130
12-72.	Tractor Toolbox Replacement	12-132
12-73.	Splash Guard Replacement	12-133
12-74.	Tractor Pioneer Tool Kit Bracket Replacement	12-134
12-75.	Deckplate and Approach Plate Replacement	12-135

12-71. SPARE TIRE CARRIER REPLACEMENT

THIS TASK COVERS:

a. Removal **b. Installation**

INITIAL SETUP

APPLICABLE MODELS
M818

MATERIALS/PARTS
Twenty-four locknuts

PERSONNEL REQUIRED
Two

REFERENCES (TM)
TM 9-2320-260-10
TM 9-2320-260-20P

EQUIPMENT CONDITION
- Parking brake set (TM 9-2320-260-10).
- Spare tire removed (TM 9-2320-260-10).
- Toolbox removed (para. 12-72).

a. Removal

1. Remove locknut (24), screw (2), and bracket (1) from bracket (3). Discard locknut (24).
2. Remove locknut (23), screw (12), bracket (3), and spacer (8) from spare tire carrier (9). Discard locknut (23).
3. Remove four locknuts (15), screws (22), washers (21), and spare tire carrier (9) from two mounting brackets (14). Discard locknuts (15).
4. Remove locknut (4), screw (5), and bracket (3) from bracket (7).
5. Remove locknut (6), screw (10), and bracket (7) from spare tire carrier (9). Discard locknut (6).
6. Remove eight locknuts (19), screws (20), and spare tire carrier (9) from two brackets (11) and (17), Discard locknuts (19).
7. Remove eight locknuts (16), screws (18), and two brackets (11) and (17) from deckplates (13). Discard locknuts (16).

12-71. SPARE TIRE CARRIER REPLACEMENT (Contd)

b. Installation

1. Install two brackets (11) and (17) on deckplates (13) with eight screws (18) and new locknuts (16).
2. Install two brackets (11) and (17) on spare tire carrier (9) with eight screws (20) and new locknuts (19).
3. Install spare tire carrier (9) on two brackets (14) with four screws (22), washers (21), and new locknuts (15).
4. Install bracket (7) on spare tire carrier (9) with screw (10) and new locknut (6).
5. Install bracket (3) on bracket (7) with screw (5) and new locknut (4).
6. Install bracket (3) on spare tire carrier (9) with screw (12), spacer (8), and new locknut (23).
7. Install bracket (1) on bracket (3) with screw (2) and new locknut (24).

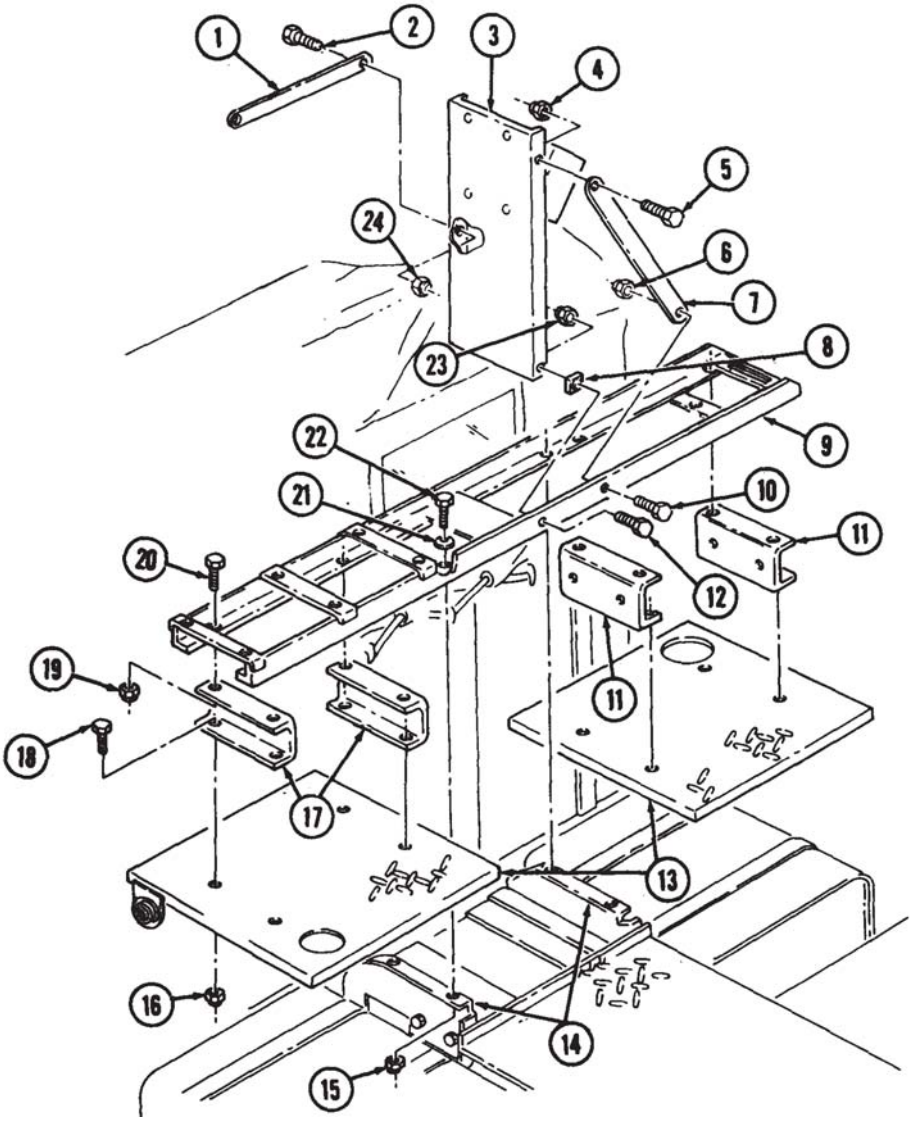

FOLLOW-ON TASKS: • Install toolbox (para. 12-72).
• Install spare tire (TM 9-2320-260-10).

12-72. TRACTOR TOOLBOX REPLACEMENT

THIS TASK COVERS:

a. Removal **b. Installation**

INITIAL SETUP

APPLICABLE MODELS
M818

MATERIALS/PARTS
Ten locknuts

PERSONNEL REQUIRED
Two

REFERENCES (TM)
TM 9-2320-260-10
TM 9-2320-260-20P

EQUIPMENT CONDITION
- Parking brake set (TM 9-2320-260-10).
- Spare tire removed (TM 9-2320-260-10).

a. Removal

1. Remove two locknuts (11), screws (1), and brace (2) from toolbox (10) and support bracket (4). Discard locknuts (11).
2. Remove two locknuts (12) and screws (3) from angle brackets (5) and toolbox (10). Discard locknuts (12).
3. Remove six locknuts (7), screws (9), washers (8), and toolbox (10) from mounting bracket (6). Discard locknuts (7).

b. Installation

1. Install toolbox (10) on mounting bracket (6) with six screws (9), washers (8), and new locknuts (7).
2. Install two angle brackets (5) on toolbox (10) with four screws (3) and new locknuts (12).
3. Install brace (2) on toolbox (10) and support bracket (4) with two screws (1) and new locknuts (11).

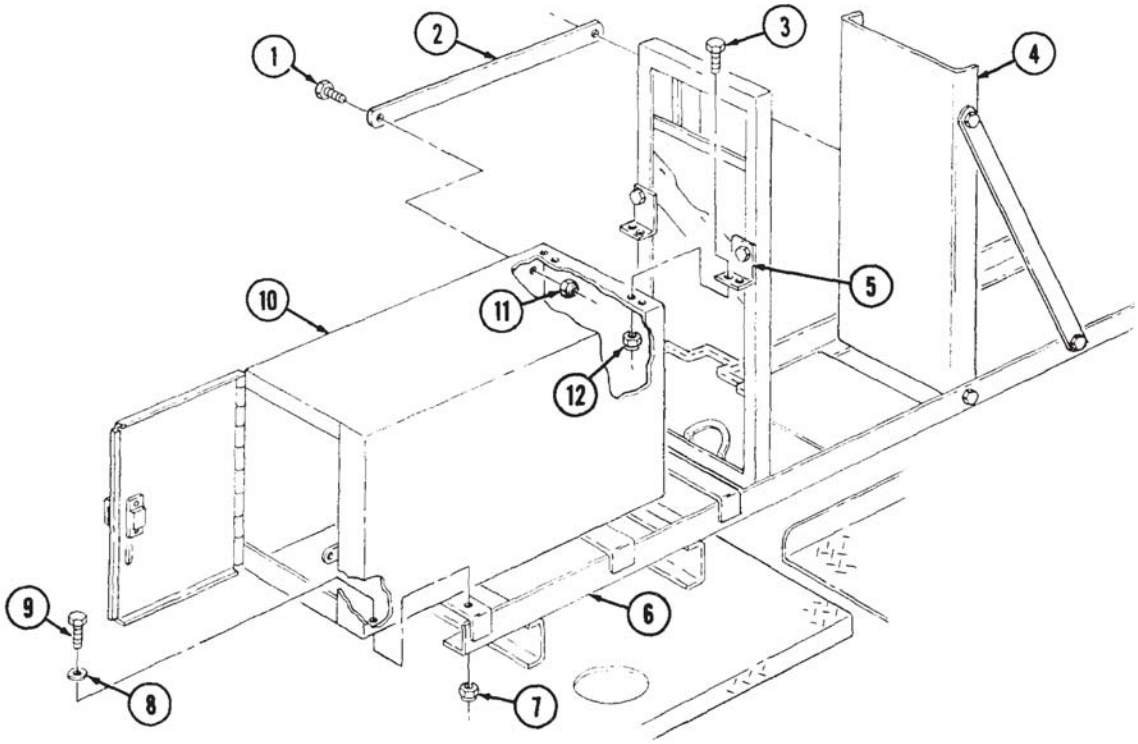

FOLLOW-ON TASK: Install spare tire (TM 9-2320-260-10).

12-73. SPLASH GUARD REPLACEMENT

THIS TASK COVERS:

a. Removal **b. Installation**

INITIAL SETUP

APPLICABLE MODELS
M818

MATERIAIS/PARTS
Fifteen locknuts

REFERENCES (TM)
TM 9-2320-260-10
TM 9-2320-260-20P

EQUIPMENT CONDITION
Parking brake set (TM 9-2320-260-10).

a. Removal

1. Remove three locknuts (14), washers (13), and screws (10) from support plate (11) and fuel tank hanger (15). Discard locknuts (14).
2. Remove three locknuts (7) washers (8), screws (12), and support plate (11) from splash guard (4). Discard locknuts (7).
9. Remove six locknuts (6), washers (5), screws (3), and splash guard (4) from bracket (9). Discard locknuts (6).
4. Remove three locknuts (1), screws (2), and bracket (9) from frame (16). Discard locknuts (1).

b. Installation

1. Install bracket (9) on frame (16) with three screws (2) and new locknuts (1).
2. Install splash guard (4) on bracket (9) with six screws (3), washers (5), and new locknuts (6).
3. Install support plate (11) on splash guard (4) with three screws (12), washers (8), and new locknuts (7).
4. Install support plate (11) on fuel tank hanger (15) with three screws (10), washers (13), and new locknuts (14).

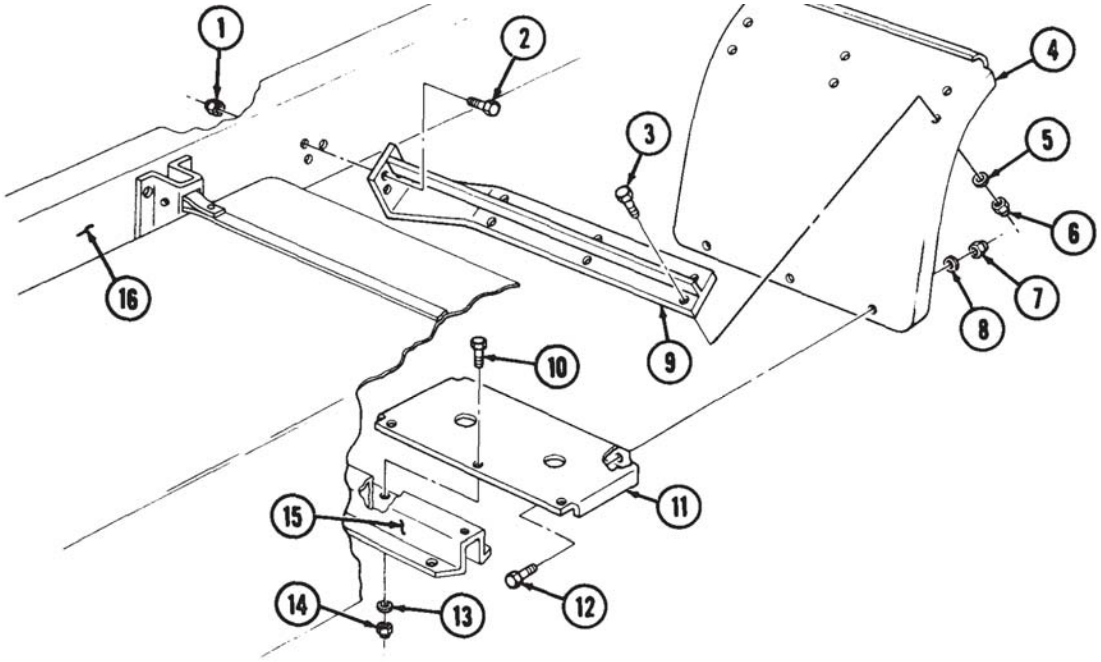

12-74. TRACTOR PIONEER TOOL KIT BRACKET REPLACEMENT

THIS TASK COVERS:

a. Removal **b. Installation**

INITIAL SETUP

APPLICABLE MODELS
M818

MATERIALS/PARTS
Eight locknuts

REFERENCES (TM)
TM 9-2320-260-10
TM 9-2320-260-20P

EQUIPMENT CONDITION
- Parking brake set (TM 9-2320-260-10).
- Pioneer tools removed (TM 9-2320-260-10).

a. Removal

1. Remove two locknuts (8) and screws (6) from support bracket (7) and pioneer tool kit bracket (4). Discard locknuts (8).
2. Remove four locknuts (9) and screws (1) from toolbox (10) and two angle brackets (3). Discard locknuts (9).
3. Remove two locknuts (5), screws (2), and angle brackets (3) from pioneer tool kit bracket (4). Discard locknuts (5).

b. Installation

1. Install two angle brackets (3) on pioneer tool kit bracket (4) with two screws (2) and new locknuts (5).
2. Install two angle brackets (3) on toolbox (10) with four screws (1) and new locknuts (9).
3. Install pioneer tool kit bracket (4) on support bracket (7) with two screws (6) and new locknuts (8).

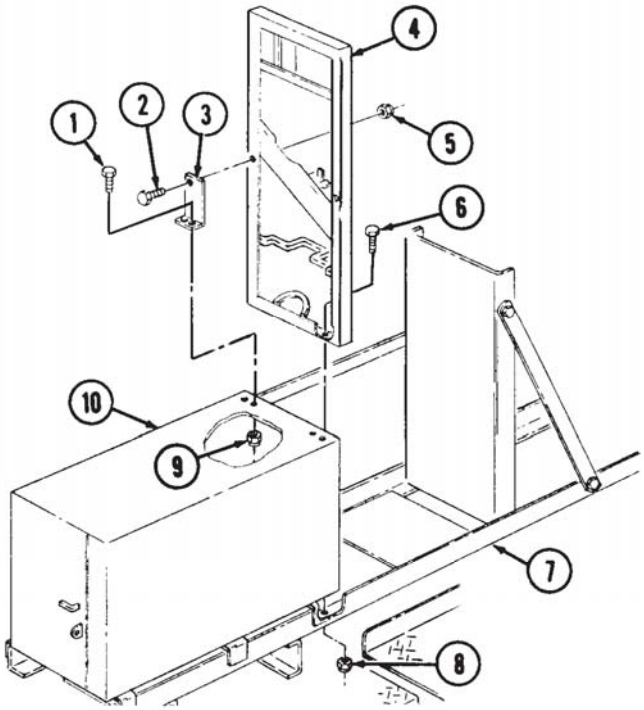

FOLLOW-ON TASK: Install pioneer tools (TM 9-2320-260-10).

12-75. DECKPLATE AND APPROACH PLATE REPLACEMENT

THIS TASK COVERS:

a. Deckplate Removal
b. Deckplate Installation
c. Approach Plate Removal
d. Approach Plate Installation

INITIAL SETUP

APPLICABLE MODELS
M818

MATERIALS/PARTS
Sixteen locknuts

REFERENCES (TM)
TM 9-2320-260-10
TM 9-2320-260-20P

EQUIPMENT CONDITION
Parking brake set (TM 9-2320-260-10).

a. Deckplate Removal

1. Remove four locknuts (8), screws (1), and clips (9) from deckplate (2). Discard locknuts (8).
2. Remove two locknuts (6), screws (4), washers (3), spacers (5), and deckplate (2) from frame (7). Discard locknuts (6).

b. Deckplate Installation

1. Install deckplate (2) on frame (7) with two spacers (5), washers (3), screws (4), and new locknuts (6).
2. Install four clips (9) on deckplate (2) with four screws (1) and new locknuts (8).

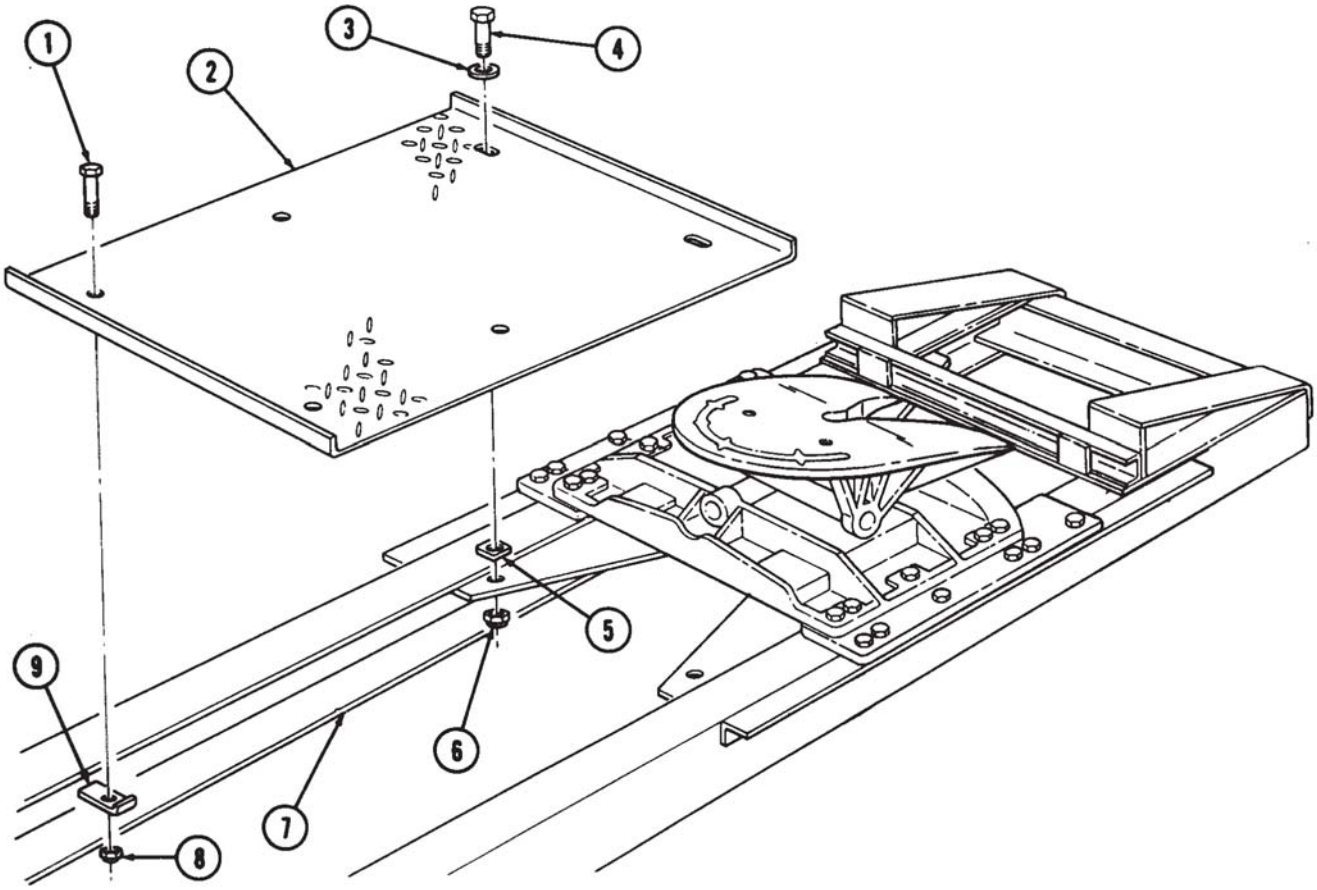

12-75. DECKPLATE AND APPROACH PLATE REPLACEMENT (Contd)

c. Approach Plate Removal

1. Remove two locknuts (1) and screws (6) from channel (11) and two approach plates (3). Discard locknuts (1).
2. Remove two locknuts (8), screws (10), and channel (11) from two approach plates (3). Discard locknuts (8).
3. Remove four locknuts (7) and screws (2) from two approach plates (3) and rails (9). Discard locknuts (7).
4. Remove two locknuts (5), screws (4), and approach plates (3) from rails (9). Discard locknuts (5).

d. Approach Plate Installation

1. Install two approach plates (3) on rails (9) with two screws (4) and new locknuts (5).
2. Install two approach plates (3) on rails (9) with four screws (2) and new locknuts (7).
3. Install channel (11) on two approach plates (3) and rails (9) with two screws (10) and new locknuts (8).
4. Install channel (11) on two approach plates (3) with two screws (6) and new locknuts (1).

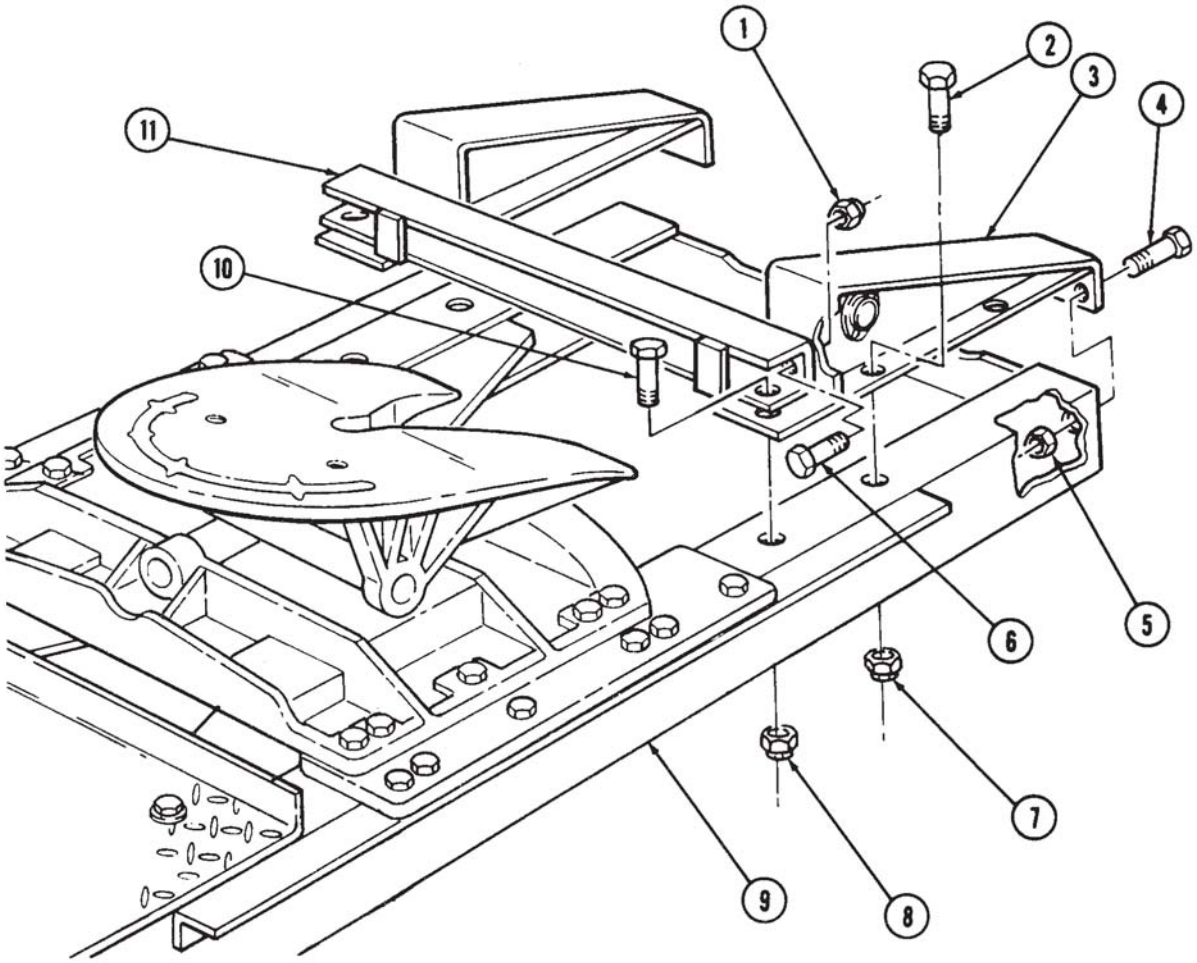

CHAPTER 13
HOIST, WINCH, AND CRANE MAINTENANCE

Section I. Hoist, Winch, and Crane Maintenance (page 13-1)
Section II. Wrecker Power Divider Maintenance (page 13-123)
Section III. Power Takeoff Linkage Controls Maintenance (page 13-134)

Section I. HOIST, WINCH, AND CRANE MAINTENANCE

13-1. HOIST, WINCH, AND CRANE MAINTENANCE INDEX

PARA. NO.	TITLE	PAGE NO.
13-2.	Shearpin Replacement	13-3
13-3.	Automatic Brake Test and Adjustment	13-4
13-4.	Drag Brake Test and Adjustment	13-8
13-5.	Winch Cable, Chain, and Hook Maintenance	13-10
13-6.	Hand Winch Maintenance (M821)	13-14
13-7.	Front Winch Frame Extension Replacement	13-16
13-8.	Front Winch Replacement	13-18
13-9.	Front Winch Propeller Shaft Replacement	13-22
13-10.	Front Winch Trolley Replacement	13-24
13-11.	Front Winch Cable Tensioner Replacement	13-26
13-12.	Bolster MidWinch Replacement	13-28
13-13.	Bolster MidWinch DriveChain and Sprockets Maintenance	13-30
13-14.	Bolster MidWinch Propeller Shaft Replacement	13-34
13-15.	Rear Winch Replacement	13-36
13-16.	Rear Winch Propeller Shaft Maintenance	13-40
13-17.	Rear Winch Drivechain and Sprockets Maintenance	13-42
13-18.	Rear Winch Controls Maintenance	13-44
13-19.	Engine Clutch Control Lever Replacement	13-46
13-20.	Rear Winch Cable Tensioner Valve Replacement	13-48
13-21.	Wrecker Rear Winch Cable Roller Replacement	13-50
13-22.	Rear Winch Airbrake Chamber Replacement	13-52
13-23.	Rear Winch Driveshaft Housing Maintenance	13-54
13-24.	Rear Winch Cable Tensioner Replacement	13-56
13-25.	Dump Hoist Safety Latch Maintenance	13-58
13-26.	Dump Hoist Control Box Maintenance	13-62
13-27.	Dump Controls Replacement	13-68
13-28.	Dump Control Linkage Maintenance	13-70
13-29.	Dump Hoist Pump Propeller Shaft Maintenance	13-72

13-1. HOIST, WINCH, AND CRANE MAINTENANCE INDEX (Contd)

PARA. NO.	TITLE	PAGE NO.
13-30.	Wrecker Hydraulic Oil Filter Element Replacement	13-74
13-31.	Wrecker Hydraulic Oil Reservoir Replacement	13-76
13-32.	Wrecker Restrictor Valve Replacement	13-78
13-33.	Wrecker Control Valve Replacement	13-80
13-34.	Wrecker Control Valve Hydraulic Hoses Replacement	13-82
13-35.	Wrecker Hydraulic Pressure Test and Adjustment	13-84
13-36.	Wrecker Lift Cylinder Packing Adjustment	13-86
13-37.	Wrecker Inner Boom Roller Adjustment	13-87
13-38.	Wrecker Boom Support Replacement (M816, M819)	13-88
13-39.	Wrecker Hoist Winch Block Replacement (M816, M819)	13-90
13-40.	Wrecker Throttle Control Lever Replacement	13-92
13-41.	Wrecker Throttle Control Cable Maintenance	13-94
13-42.	Hoist Winch Cable Replacement (M816, M819)	13-96
13-43.	Hoist Winch Autobrake Adjustment (M816, M819)	13-98
13-44.	Tractor Wrecker Control Valve Replacement	13-100
13-45.	Tractor Wrecker Hydraulic Lines Replacement	13-106
13-46.	Tractor Wrecker Hydraulic Pump Propeller Shaft Maintenance	13-109
13-47.	Van Liftgate Controls Maintenance	13-110
13-48.	Van Liftgate Safety Latch Replacement	13-112
13-49.	Van Liftgate Oil Tank Replacement	13-114
13-50.	Van Liftgate Pump Motor Replacement	13-116
13-51.	Van Liftgate Control Linkage Maintenance	13-118
13-52.	Van Lifigate Control Valve Replacement	13-120
13-53.	Van Liftgate Pump Propeller Shaft Replacement	13-122

13-2. SHEARPIN REPLACEMENT

THIS TASK COVERS:

a. Removal **b. Installation**

INITIAL SETUP

APPLICABLE MODELS
All W/W

MATERIALS/PARTS
Two cotter pins

REFERENCES (TM)
TM 9-2320-260-10
TM 9-2320-260-20P

EQUIPMENT CONDITION
Parking brake set (TM 9-2320-260-10).

NOTE

Shearpin removal and installation is performed basically the same for all winches. This procedure is for the front winch.

a. Removal

Rotate drum (1) as necessary, and remove two cotter pins (3) and shearpin (2) from coupling (4). Discard cotter pins (3).

b. Installation

Rotate drum (1) as necessary, and install shearpin (2) on coupling (4) with two new cotter pins (3).

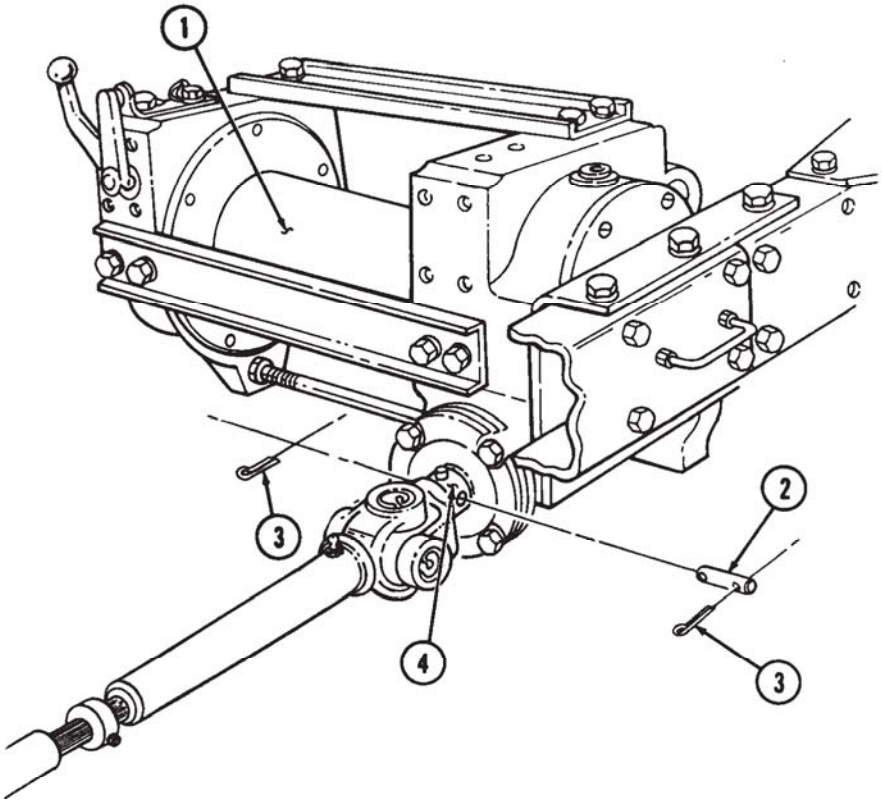

13-3. AUTOMATIC BRAKE TEST AND ADJUSTMENT

THIS TASK COVERS:

a. Testing **b. Adjustment**

INITIAL SETUP

APPLICABLE MODELS
All W/W

PERSONNEL REQUIRED
Two

REFERENCES (TM)
TM 9-2320-260-10
TM 9-2320-260-20P

EQUIPMENT CONDITION
- Parking brake set (TM 9-2320-260-10).
- Wheels chocked (TM 9-2320-260-10).

GENERAL SAFETY INSTRUCTIONS
- Wear hand protection when handling winch cable.
- Never stand between the winch and its load.
- A minimum of four turns of cable must remain on winch drum at all times.
- Use hand throttle to control engine speed when operating winch.
- Allow brake band cover and adjustment screw to cool before making adjustments.

NOTE

Testing and adjustment of the front winch, midship winch (M815), and rear winch (M816) automatic brakes are the same. This procedure covers the front winch automatic brake. Refer to TM 9-2320-260-10 for winch operation.

a. Testing

CAUTION

Selection of the grade used in this procedure should be within the tolerance capabilities of the second vehicle. Failure to do so may result in damage to equipment.

1. Position vehicle (1) at the top of a steep grade, facing downhill with the engine running (TM 9-2320-260-10).
2. Position second vehicle (2) at the bottom of a steep grade, facing uphill with engine running. Refer to second vehicle's operator manual.

CAUTION

Assistant must remain in the second vehicle to engage service brake in the event of winch failure. Failure to do so may result in damage to equipment.

WARNING

- Wear hand protection when handling winch cable. Broken wires may cause injury to personnel.
- Never stand between the winch and its load. Failure to comply may result in injury to personnel.
- A minimum of four turns of cable must remain on winch drum at all times. Failure to do this may result in injury to personnel or damage to equipment.

3. Using the second vehicle (2) as the load, rig the load (TM 9-2320-260-10).

13-3. AUTOMATIC BRAKE TEST AND ADJUSTMENT (Contd)

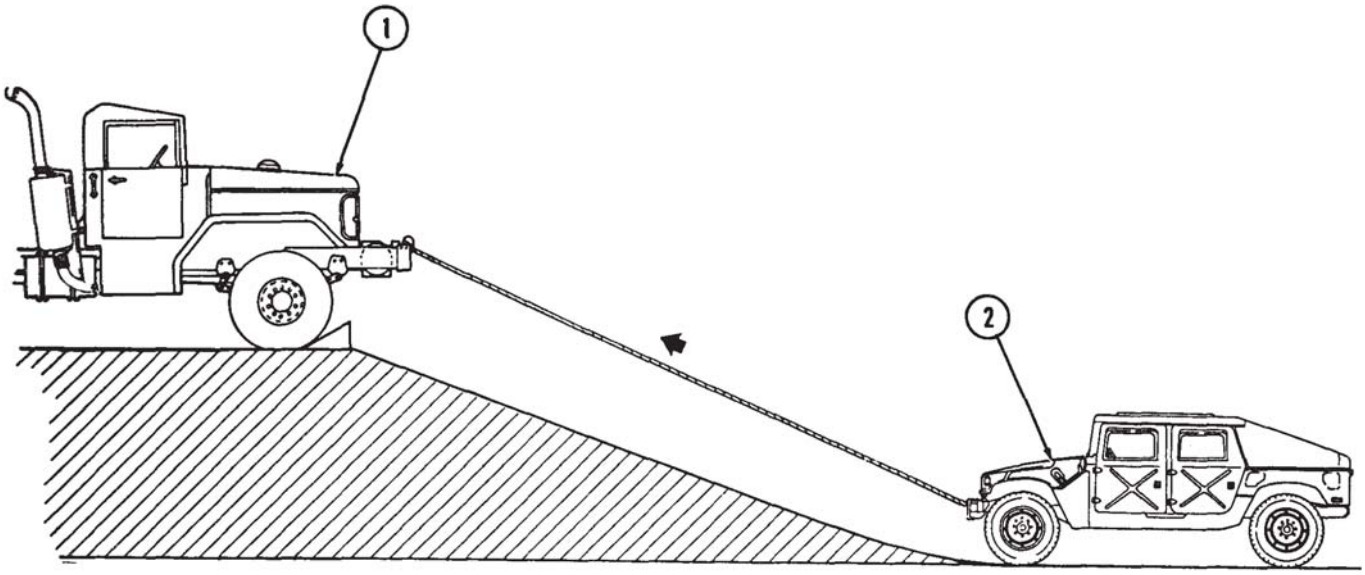

13-3. AUTOMATIC BRAKE TEST AND ADJUSTMENT (Contd)

4. Refer to second vehicle (2) operator's manual to prepare second vehicle (2) for towing as follows:
   a. Place transmission lever in "N" (neutral) position.
   b. Disengage parking brake.
   c. Disengage front wheel drive lever if engaged.

WARNING

Always use hand throttle to control engine speed when operating winch. Avoid sudden changes in speed. Rough or jerky operations may cause shearpin to break or cable to snap. Damage to vehicle or injury to personnel may result.

5. Using hand throttle, pull second vehicle (2) halfway up grade and observe movement of second vehicle (2).
6. Engage clutch of test vehicle (1). If second vehicle (2) rolls backward, go to task b and adjust automatic brake of test vehicle (1). If second vehicle (2) holds steady on the incline, no adjustment is required.
7. With clutch pedal depressed, place winch control lever in "R" (reverse) and unwind winch cable (3) until second vehicle (2) is on level ground.
8. With second vehicle (2) on level ground, shift winch control lever in upper "N" (neutral) position, disengage clutch, and disengage hand throttle.
9. Set parking brake on both vehicles (1) and (2).
10. Unrig the load, and stow cable (3) (TM 9-2320-260-10).

b. Adjustment

WARNING

Brake band cover and adjustment screw may be too hot to proceed with this task. If cover and screw are too hot, allow them to cool before continuing with adjustment. Failure to do this may result in injury to personnel.

1. Adjust brake band by turning adjusting screw (4) clockwise in 1/2-turn increments to increase braking action enough to hold second vehicle (2) steady on incline.
2. Repeat testing (task a, steps 5 through 9) and adjustment (task b, step 1) until correct adjustment is obtained.

13-3. AUTOMATIC BRAKE TEST AND ADJUSTMENT (Contd)

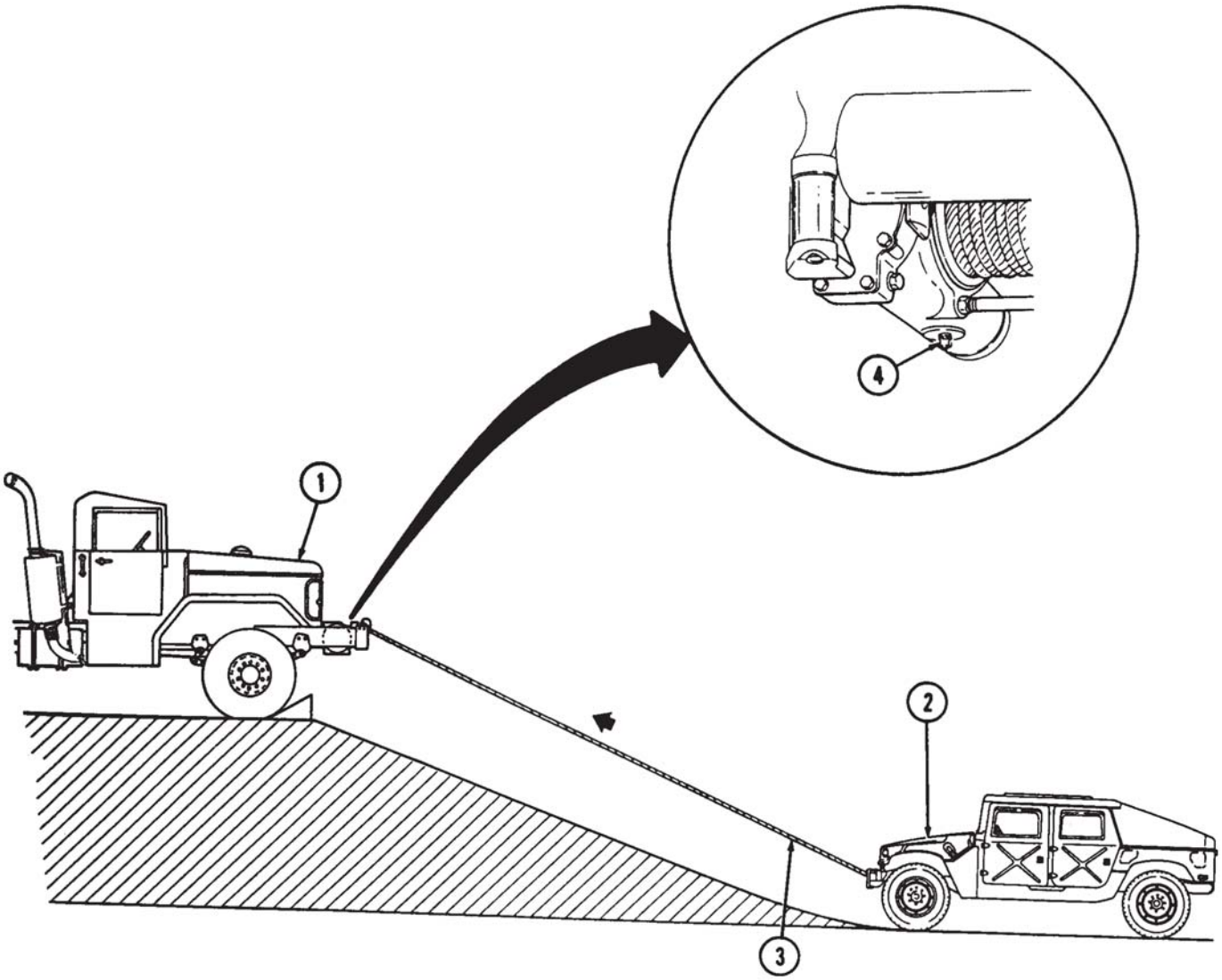

FOLLOW-ON TASK: Remove wheel chocks (TM 9-2320-260-10).

13-4. DRAG BRAKE TEST AND ADJUSTMENT

THIS TASK COVERS:

a. Testing **b. Adjustment**

INITIAL SETUP

APPLICABLE MODELS
All W/W

REFERENCES (TM)
TM 9-2320-260-10
TM 9-2320-260-20P

EQUIPMENT CONDITION
- Parking brake set (TM 9-2320-260-10).
- Prepare front winch for use (TM 9-2320-260-10).

GENERAL SAFETY INSTRUCTIONS
Wear hand protection when handling winch cable.

NOTE

The front winch and midship winch (M815) drag brakes are tested and adjusted the same way. This procedure covers the front winch drag brake.

a. Testing

WARNING

Wear hand protection when handling winch cable. Broken wires may cause injury to personnel.

1. Unwind cable (3) 3-4 ft (0.9-1.2 m) (TM 9-2320-260-10).
2. Pull cable (3) out 3-4 ft (0.9-1.2 m) and quickly release cable (3). Winch drum (1) should stop turning when cable (3) is released. If drum (1) does not stop turning, or does not pay out cable (3) when cable (3) is pulled, adjust drag brake.

b. Adjustment

NOTE

When performing step 1, turn adjusting screw in 1/2-turn increments until proper drag adjustment is accomplished.

1. Turn adjusting screw (2) clockwise to increase drag; counterclockwise to reduce drag.
2. Repeat drag test (task a, step 2) to ensure drag is correctly adjusted.

13-4. DRAG BRAKE TEST AND ADJUSTMENT (Contd]

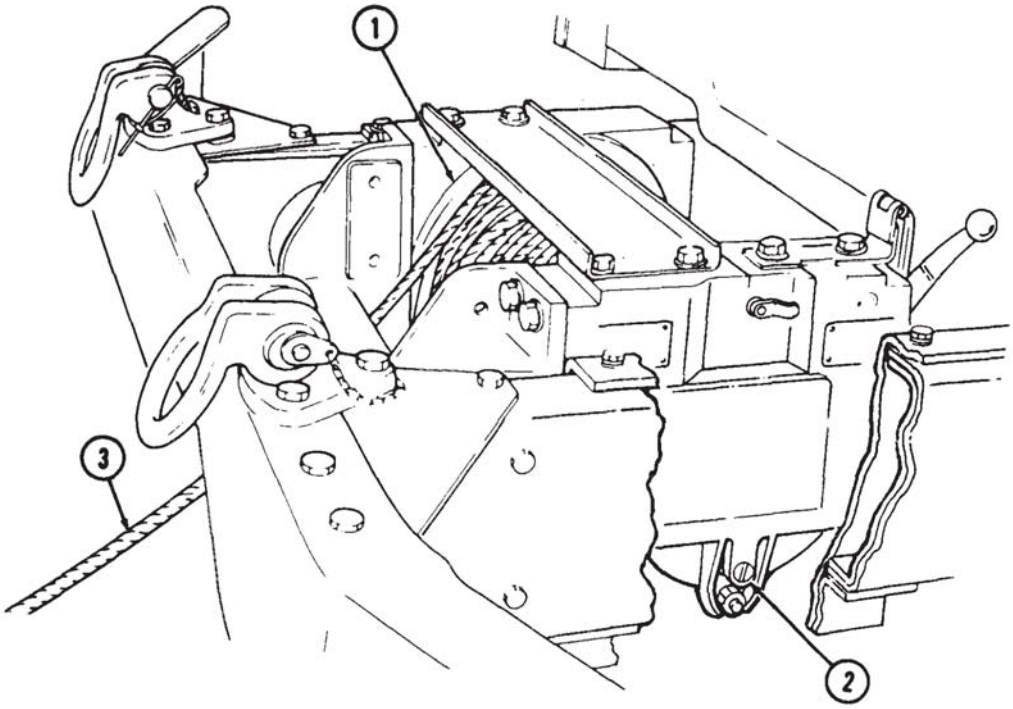

FOLLOW-ON TASK: Rewind and stow cable (TM 9-2320-260-10).

13-5. WINCH CABLE, CHAIN, AND HOOK MAINTENANCE

THIS TASK COVERS:

a. Removal
b. Cleaning and Inspection
c. Installation

INITIAL SETUP

APPLICABLE MODELS
All W/W

MATERIALS/PARTS
Lubricating oil (Appendix C, Item 19)
Rags (Appendix C, Item 22)

REFERENCES (TM)
LO 9-2320-260-12
TM 9-2320-260-10
TM 9-2320-260-20P

EQUIPMENT CONDITION
- Parking brake set (TM 9-2320-260-10).
- Winch prepared for use (TM 9-2320-260-10).

GENERAL SAFETY INSTRUCTIONS
- Wear hand protection when handling winch cable.
- Eye protection is required when using a wire brush for cleaning.

a. Removal

WARNING

Wear hand protection when handling winch cable. Broken wires may cause injury to personnel.

1. Unwind cable (4) from winch (2) (TM 9-2320-260-10).
2. Remove setscrew (1) and cable (4) from winch drum (3).

NOTE

Two types of cable connectors maybe found on M809 series winches.

3. Hollow clevis type:
   a. Remove nut (7), screw (5), and chain (8) from clevis yoke (6).
   b. Remove cap (10), cable (4), and plug (9) from clevis yoke (6).
   c. Remove plug (9) and cap (10) from cable (4).
4. Half clamp type:
   a. Remove clamp nut (13), loop (12), and half clamps (14) and (15) from cable (4).
   b. Remove hook (11) from loop (12).

13-5. WINCH CABLE, CHAIN, AND HOOK MAINTENANCE (Contd)

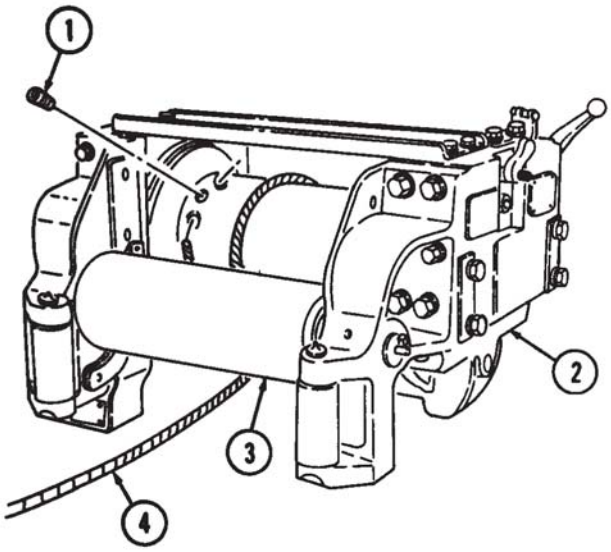

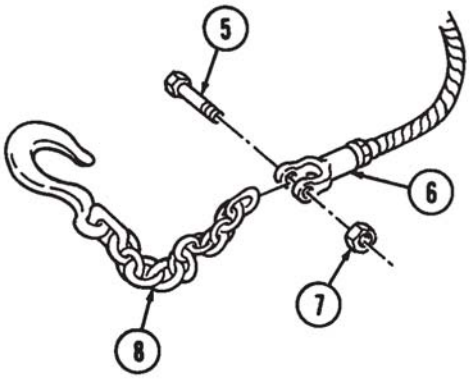

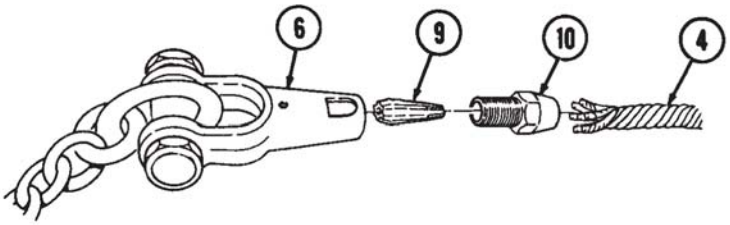

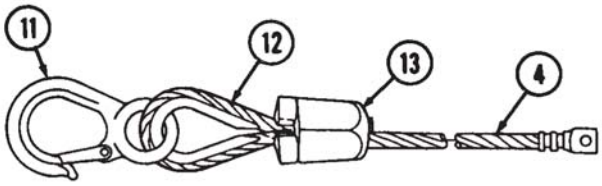

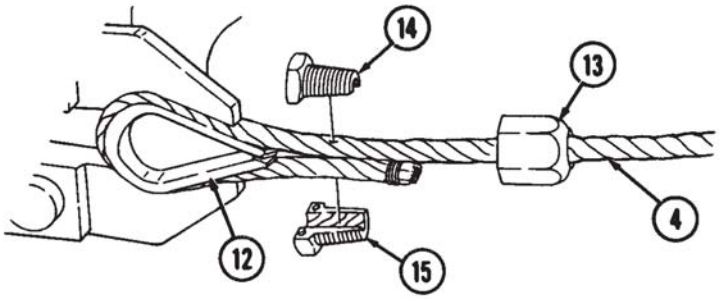

13-5. WINCH CABLE, CHAIN, AND HOOK MAINTENANCE (Contd)

b. Cleaning and Inspection

WARNING

Eye protection is required when using wire brush for cleaning.
Failure to do this may result in injury to personnel.

1. Soak cable (3) in lubricating oil (LO 9-2320-260-12). Clean cable (3) with wire brush.
2. Inspect cable (3) and parts for breaks and wear. Replace cable and/or parts if broken or worn.
3. Lubricate winch drum (15) and cable (3) with lubricating oil (LO 9-2320-260-12).

c. Installation

1. Half clamp type:
   a. Install hook (6) on loop (5).
   b. Install half clamps (1) and (4) on cable (3), close to loop (5), with clamp nut (2).
   c. If loop (5) can be removed from cable (3), perform steps a. and b. again.
2. Hollow clevis type:
   a. Position cap (9) on cable (3).
   b. Install plug (8) on cable (3).
   c. Install plug (8) and cable (3) into clevis yoke (7) with cap (9).
   d. Install chain (12) on clevis yoke (7) with screw (10) and nut (11).
3. Install cable (3) on winch drum (15) with setscrew (13).
4. Wind and stow cable (3) on winch (TM 9-2320-260-10).

13-5. WINCH CABLE, CHAIN, AND HOOK MAINTENANCE (Contd)

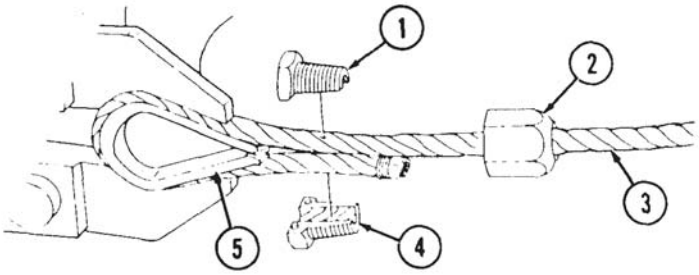

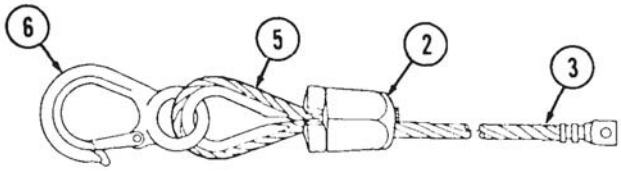

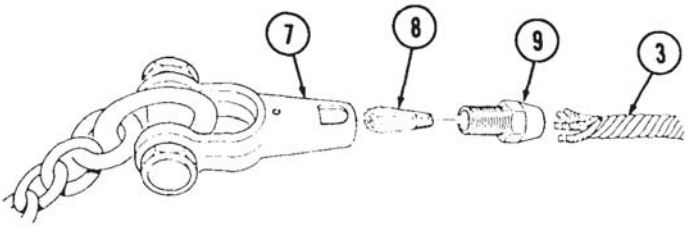

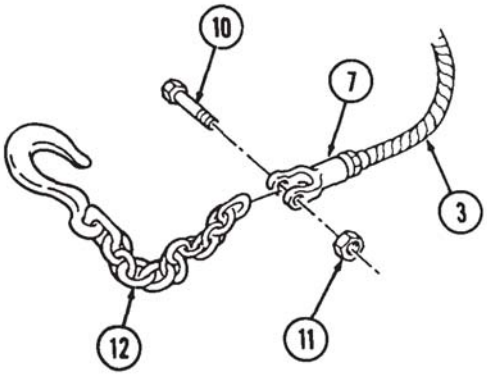

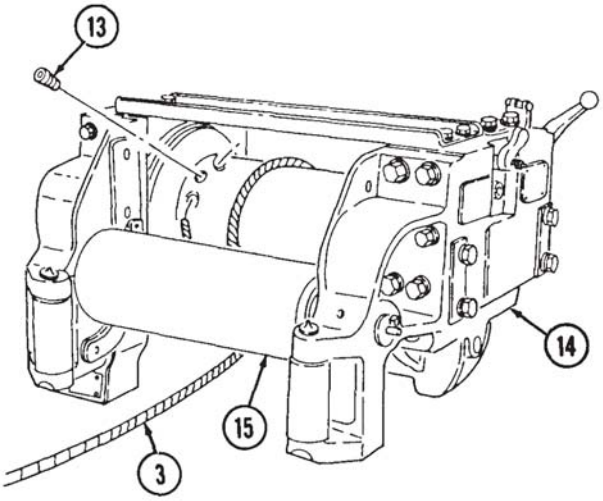

13-6. HAND WINCH MAINTENANCE (M821)

THIS TASK COVERS:

a. Removal
b. Cleaning and Inspection
c. Installation

INITIAL SETUP

APPLICABLE MODELS
M821

MATERIALS/PARTS
Woodruff key
Cotter pin

REFERENCES (TM)
TM 9-2320-260-10
TM 9-2320-260-20P

EQUIPMENT CONDITION
- Parking brake set (TM 9-2320-260-10).
- Winch cable, chain, and hook removed (para. 13-5).

a. Removal

1. Remove retaining pin (10) from collar (11).
2. Remove collar (11), lever (9), ratchet wheel (12), and woodruff key (8) from shaft (7). Discard woodruff key (8).
3. Remove retaining pin (6) from drum (5) and shaft (7).
4. Remove shaft (7) and drum (5) from winch supports (13) and (4).
5. Remove cotter pin (1) from nut (15). Discard cotter pin (1).
6. Remove nut (15), pawl (2), and spring (3) from stud (14).

b. Cleaning and Inspection

1. Inspect drum (5) for cracks or other damage. Replace drum (5) if damaged.
2. Inspect parts for cracks, bends, chips, warping, or scoring. Replace parts if damaged.

c. Installation

1. Install spring (3) and pawl (2) on stud (14) with nut (15) and new cotter pin (1).
2. Install drum (5) and shaft (7) on winch supports (13) and (4) with retaining pin (6).
3. Install new woodruff key (8) on shaft (7).
4. Install ratchet wheel (12) and lever (9) on shaft (7) with collar (11) and retaining pin (10).

13-6. HAND WINCH MAINTENANCE (M821) (Contd)

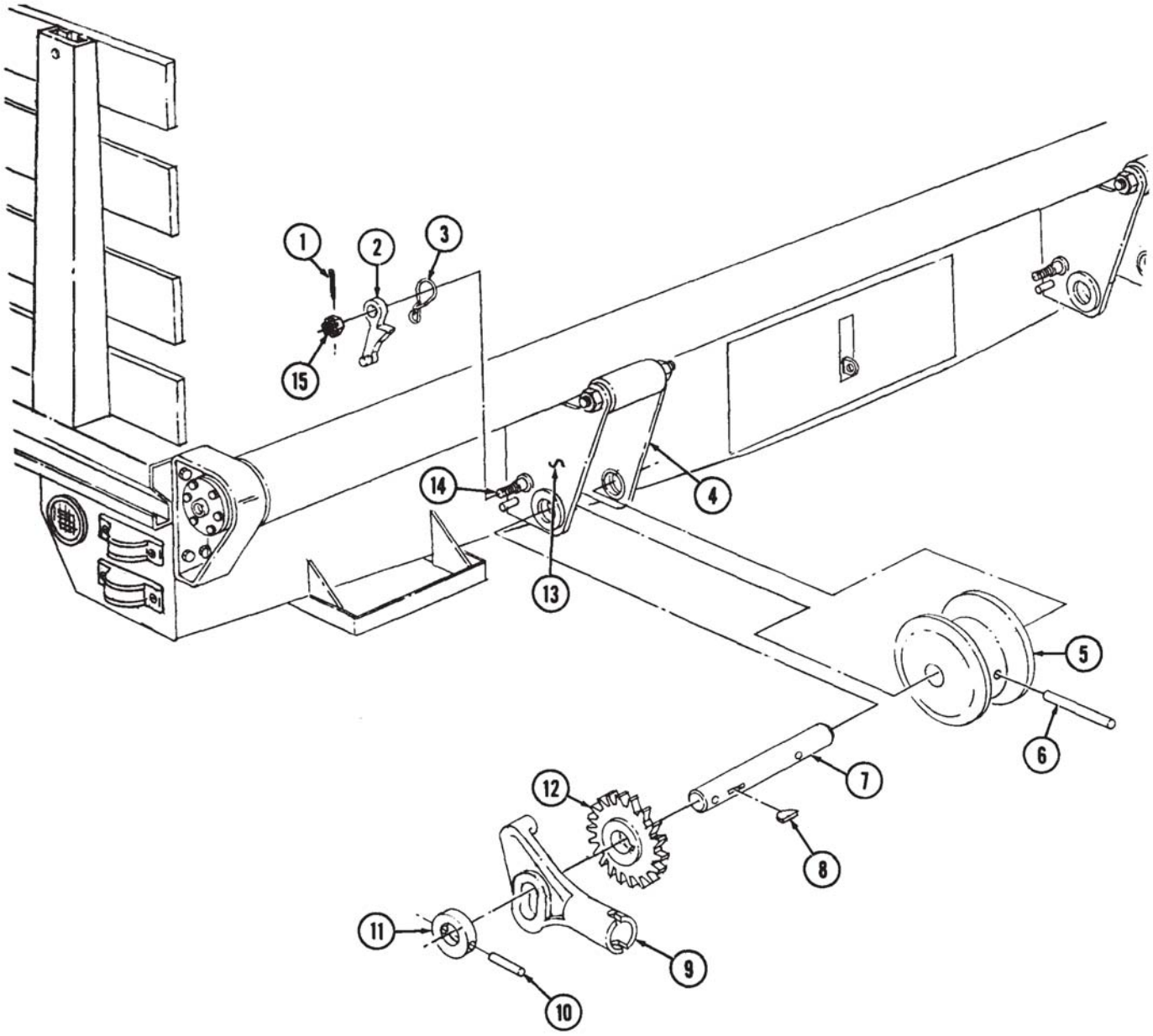

FOLLOW-ON TASK: Install winch cable, chain, and hook (para. 13-5).

13-7. FRONT WINCH FRAME EXTENSION REPLACEMENT

THIS TASK COVERS:

a. Removal **b. Installation**

INITIAL SETUP

APPLICABLE MODELS
M813A1 W/W, M818 W/W, M819 W/W

MATERIALS/PARTS
Eight locknuts
Three lockwashers

REFERENCES (TM)
TM 9-2320-260-10
TM 9-2320-260-20P

EQUIPMENT CONDITION
- Parking brake set (TM 9-2320-260-10).
- Front winch removed (para. 13-8).
- Vehicle tiedown loop removed (para. 10-2).

a. Removal

1. Remove three screws (10), lockwashers (9), washers (8), and angle bracket (7) from channel reinforcement (4). Discard lockwashers (9).
2. Remove four locknuts (6), screws (1), and rail extension (11) from channel reinforcement (4). Discard locknuts (6).
3. Remove four locknuts (5), screws (2), and channel reinforcement (4) from rail (3). Discard locknuts (5).

b. Installation

1. Install channel reinforcement (4) on rail (3) with four screws (2) and new locknuts (5).
2. Install rail extension (11) on channel reinforcement (4) with four screws (1) and new locknuts (6).
3. Install angle bracket (7) on channel reinforcement (4) with three washers (8), new lockwashers (9), and screws (10).

13-7. FRONT WINCH FRAME EXTENSION REPLACEMENT (Contd)

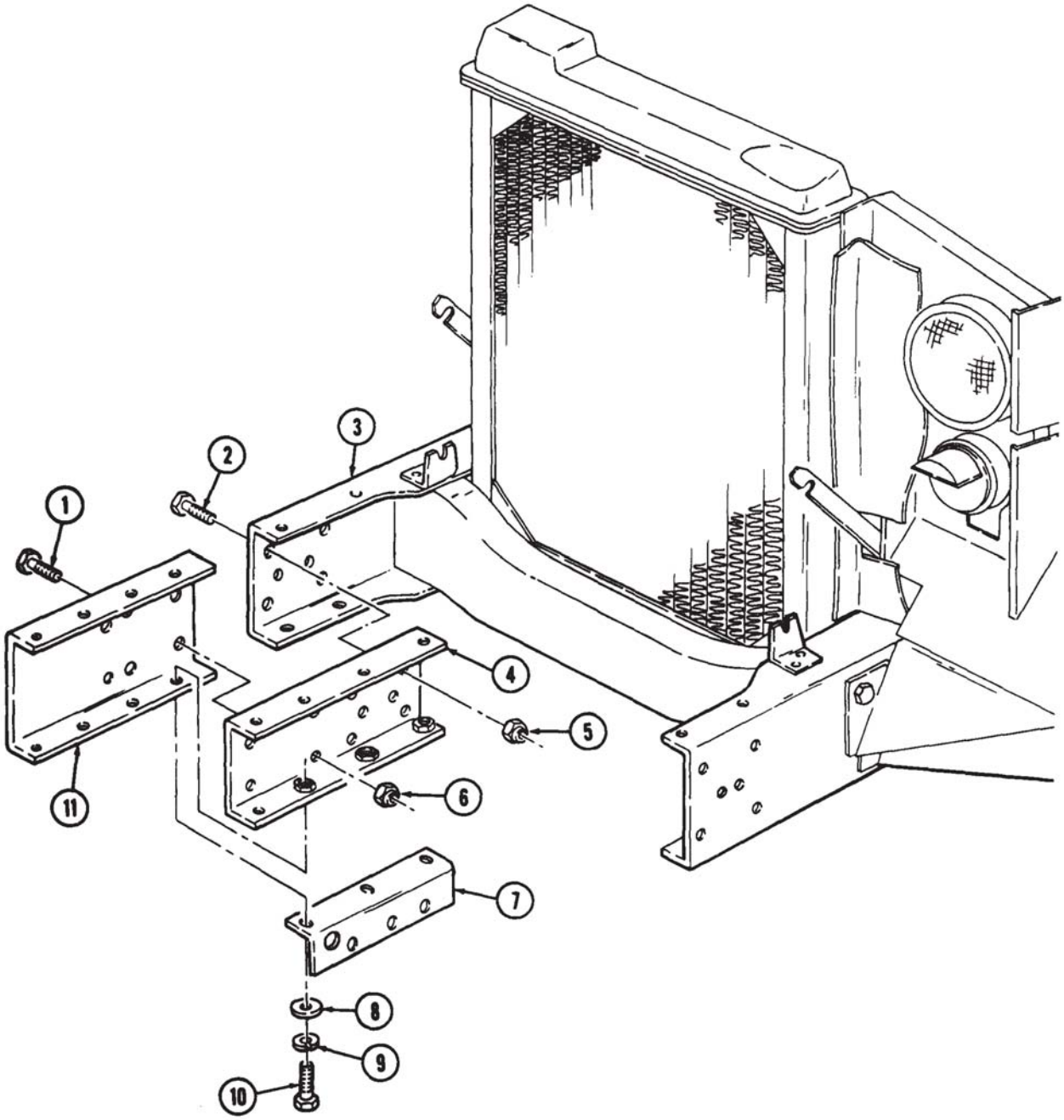

FOLLOW-ON TASKS: • Install vehicle tiedown loop (para. 10-2).
• Install front winch (para. 13-8).

13-8. FRONT WINCH REPLACEMENT

THIS TASK COVERS:

a. Removal **b. Installation**

INITIAL SETUP

APPLICABLE MODELS
All W/W

MATERIALS/PARTS
Six locknuts
Fourteen lockwashers

REFERENCES (TM)
LO 9-2320-260-12
TM 9-2320-260-10
TM 9-2320-260-20P

EQUIPMENT CONDITION
- Parking brake set (TM 9-2320-260-10).
- Winch cable, chain, and hook removed (para. 13-5).
- Front winch propeller shaft removed (para. 13-9).

GENERAL SAFETY INSTRUCTIONS
All personnel must stand clear during lifting operations.

a. Removal

1. Install chains around winch (2) and on lifting device.
2. Remove six locknuts (3), screws (7), and washers (8) from two support brackets (9) and mounting brackets (4). Discard locknuts (3).
3. Remove six screws (1), lockwashers (11), and washers (10) from two mounting brackets (4) and rail reinforcements (12). Discard lockwashers (11).

WARNING

All personnel must stand clear during lifting operations. A swinging or shifting load may cause injury to personnel.

NOTE

Assistant will help with step 4.

4. Raise winch (2) and two mounting brackets (4) from vehicle, and lower winch (2) onto supports.
5. Remove chains from winch (2) and lifting device.
6. Remove eight screws (6), lockwashers (5), and two mounting brackets (4) from winch (2). Discard lockwashers (5).

13-8. FRONT WINCH REPLACEMENT (Contd)

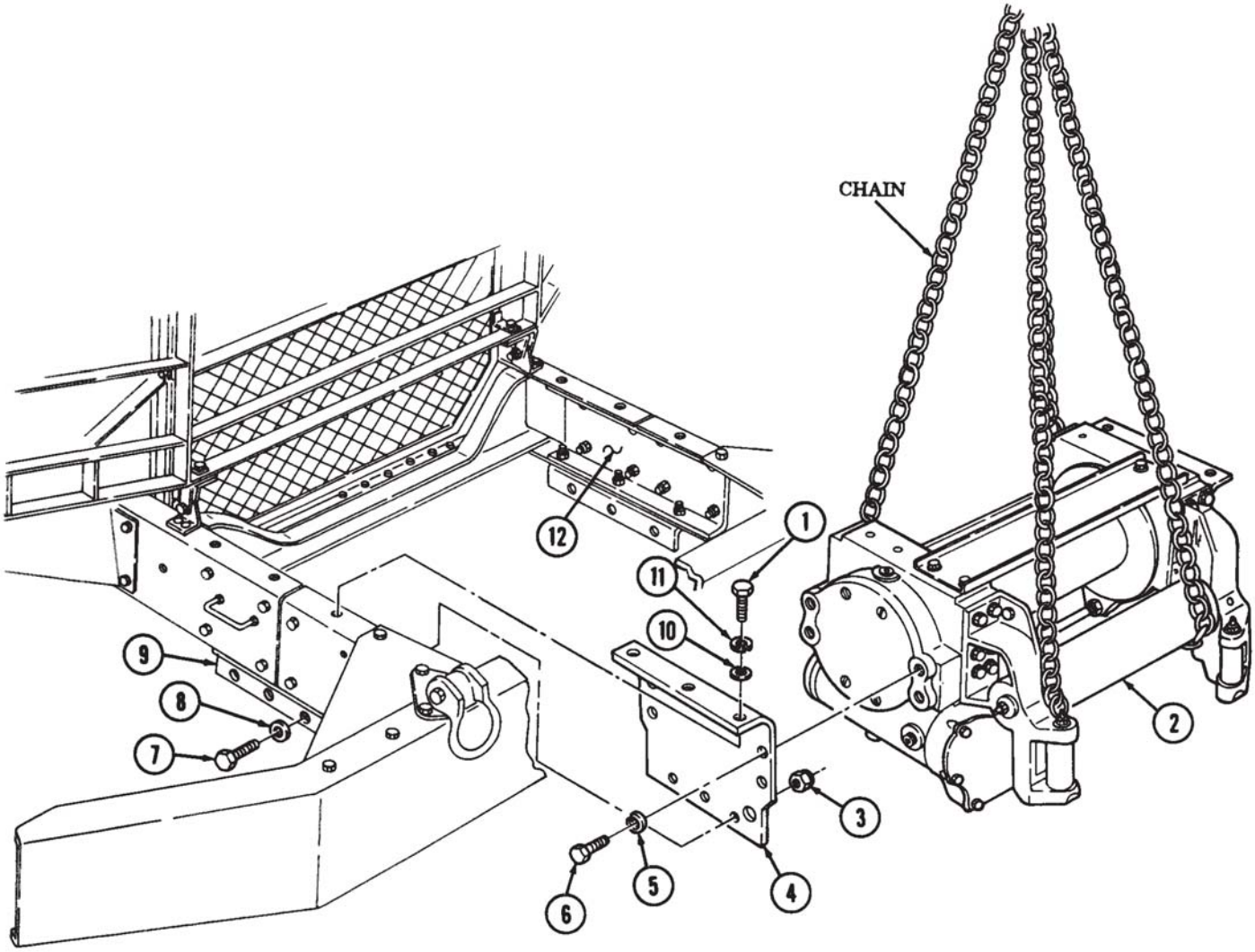

13-8. FRONT WINCH REPLACEMENT (Contd)

b. Installation

1. Install chains around winch (2) and on lifting device.
2. Install two mounting brackets (4) on winch (2) with eight new lockwashers (5) and screws (6).

WARNING

All personnel must stand clear during lifting operations. A swinging or shifting load may cause injury to personnel.

NOTE

Assistant will help with step 3.

3. Position winch (2) and two mounting brackets (4) on vehicle.
4. Install six screws (1), new lockwashers (11), and washers (10) on two mounting brackets (4) and rail reinforcements (12).
5. Install two mounting brackets (4) on support brackets (9) with six screws (7), washers (8), and new locknuts (3).
6. Remove chains from winch (2) and lifting device.

13-8. FRONT WINCH REPLACEMENT (Contd)

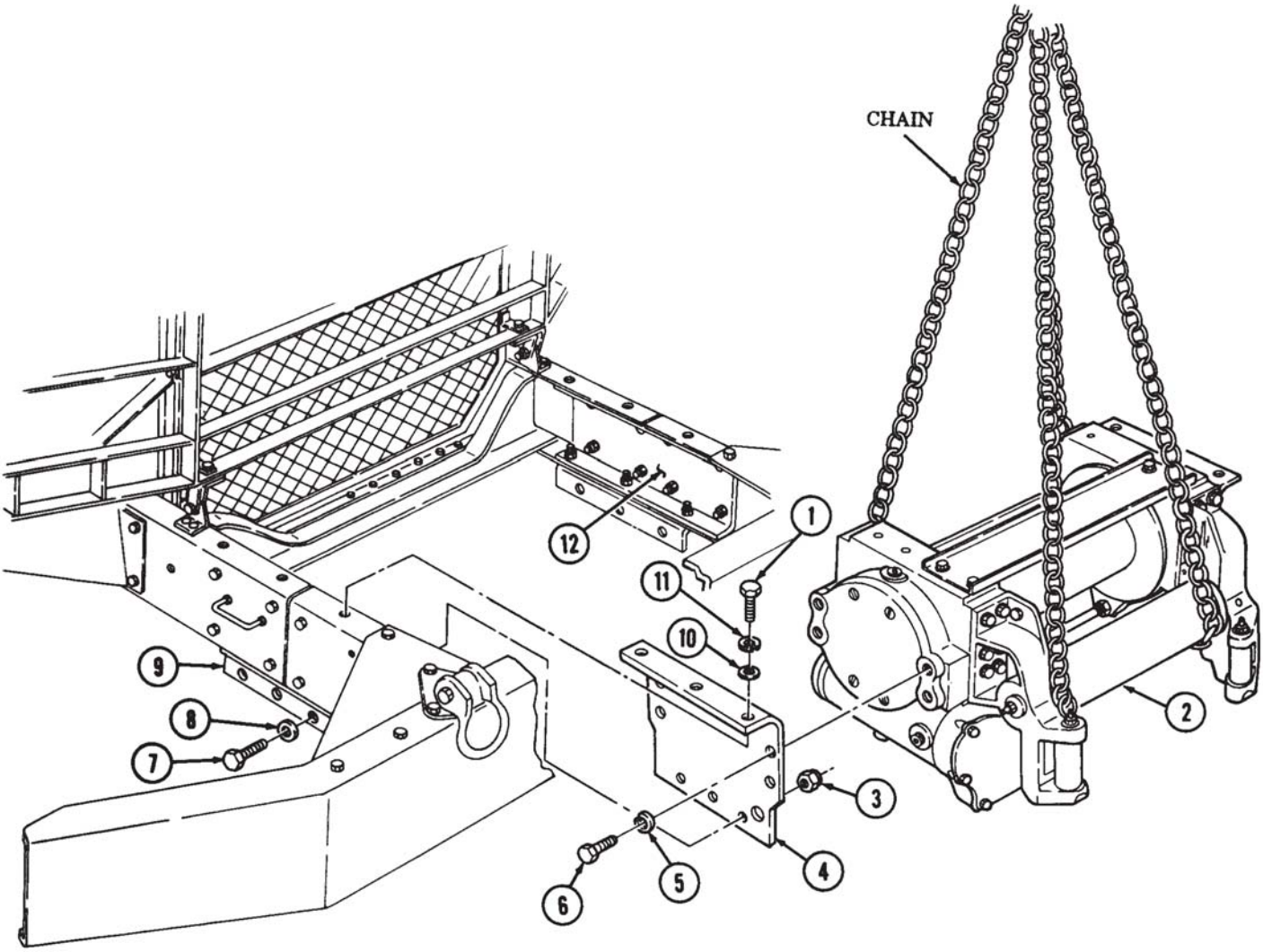

FOLLOW-ON TASKS:
- Install front winch propeller shaft (para. 13-9).
- Install winch cable, chain, and hook (para. 13-5).
- Check for proper operation of winch (TM 9-2320-260-10).

13-9. FRONT WINCH PROPELLER SHAFT REPLACEMENT

THIS TASK COVERS:

a. Removal **b. Installation**

INITIAL SETUP

APPLICABLE MODELS
All W/W

MATERIALS/PARTS
Woodruff key

REFERENCES (TM)
TM 9-2320-260-10
TM 9-2320-260-20P

EQUIPMENT CONDITION
- Parking brake set (TM 9-2320-260-10).
- Shearpin removed (para. 13-2).

a. Removal

1. Remove setscrews (6) and (7) from collar (3) and yoke (2).
2. Remove yoke (2) and woodruff key (1) from PTO shaft (8). Discard woodruff key (1).
3. Remove yoke (5) from winch shaft (4).

b. Installation

1. Install yoke (5) on winch shaft (4).
2. Install new woodruff key (1) on PTO shaft (8).
3. Aline yoke (2) with woodruff key (1) and install yoke (2) on PTO shaft (8) with setscrew (7).
4. Position and install collar (3) with setscrew (6).

13-9. FRONT WINCH PROPELLER SHAFT REPLACEMENT (Contd)

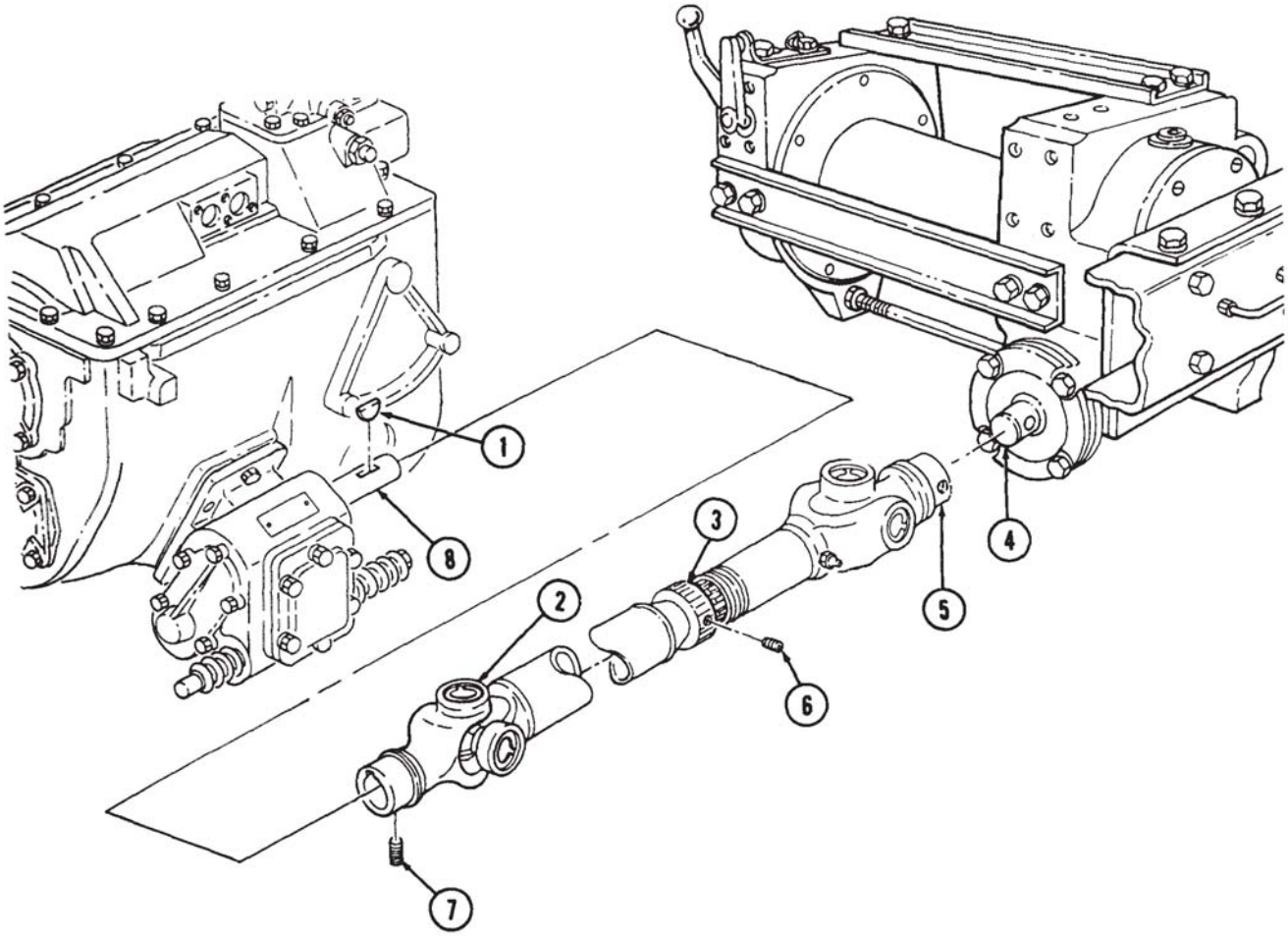

FOLLOW-ON TASK: Install shearpin (para. 13-2).

13-10. FRONT WINCH TROLLEY REPLACEMENT

THIS TASK COVERS:

a. Removal **b. Installation**

INITIAL SETUP

APPLICABLE MODELS
M816 W/W, M819 W/W, M821 W/W

MATERIALS/PARTS
Eight lockwashers

REFERENCES (TM)
LO 9-2320-260-12
TM 9-2320-260-10
TM 9-2320-260-20P

EQUIPMENT CONDITION
- Parking brake set (TM 9-2320-260-10).
- Winch cable, chain, and hook removed (para. 13-5).

a. Removal

1. Remove four screws (5) and lockwashers (6) from trolley (15) and front winch (8). Discard lockwashers (6).
2. Remove trolley (15), with level wind (1), from front winch (8).

NOTE

Rectangular holes are provided for removing screws. Slide the level wind from side-to-side until screws are visible through holes.

3. Remove four screws (13), lockwashers (14), and level wind (1) from trolley (15). Discard lockwashers (14).
4. Remove two nuts (7) from stopscrews (2).
5. Remove two stopscrews (2) and jamnuts (3) from the end plates of trolley (15).
6. Remove two nuts (12), lock latch (11), poppet nut (10), screw (4), and spring (9) from trolley (15).

b. Installation

1. Install spring (9) on trolley (15) with screw (4) and poppet nut (10).
2. Install lock latch (11) on screw (4) with two nuts (12).
3. Install two jamnuts (3) on stopscrews (2).
4. Insert two stopscrews (2) through the end plates of trolley (15) and install with two nuts (7).

NOTE

Slide level wind from side-to-side as needed to allow access to screw holes through rectangular slots in track frame.

5. Position level wind (1) on trolley (15) and install with four new lockwashers (14) and screws (13). Ensure level wind (1) travels freely on tracks of trolley (15) and lock latch (11) engages and holds level wind (1) in locked position.
6. Install trolley (15), with level wind (1), on front winch (8) with four new lockwashers (6) and screws (5).

13-10. FRONT WINCH TROLLEY REPLACEMENT (Contd)

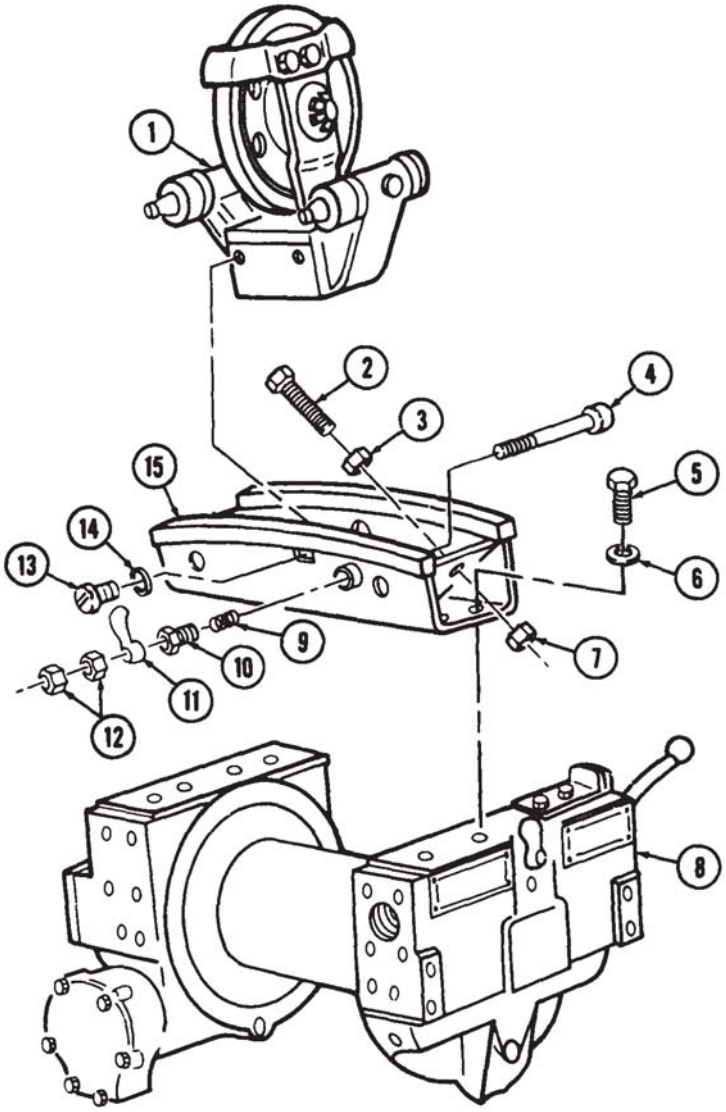

FOLLOW-ON TASKS: • Install winch cable, chain, and hook (para. 13-5).
• Lubricate level wind assembly (LO 9-2320-260-12).

13-11. FRONT WINCH CABLE TENSIONER REPLACEMENT

THIS TASK COVERS:

a. Removal **b. Installation**

INITIAL SETUP

APPLICABLE MODELS
M816 W/W, M819 W/W, M821 W/W

MATERIALS/PARTS
Four lockwashers
Woodruff key

REFERENCES (TM)
LO 9-2320-260-12
TM 9-2320-260-10
TM 9-2320-260-20P

EQUIPMENT CONDITION
- Parking brake set (TM 9-2320-260-10).
- Winch cable, chain, and hook removed (para. 13-5).

a. Removal

1. Remove four nuts (1), lockwashers (2), screws (4), spacers (5) and (6), and tensioner (11) from winch (3). Discard lockwashers (2).
2. Remove setscrew (9), poppet latch (10), handle (8), and woodruff key (7) from tensioner (11). Discard woodruff key (7).
3. Remove lubrication fittings (12) and (13) from tensioner (11).

b. Installation

1. Install lubrication fittings (12) and (13) on tensioner (11).
2. Install new woodruff key (7), handle (8), and poppet latch (10) on tensioner (11) with setscrew (9).
3. Install tensioner (11) and spacers (5) and (6) on winch (3) with four screws (4), new lockwashers (2), and nuts (1).

13-11. FRONT WINCH CABLE TENSIONER REPLACEMENT (Contd)

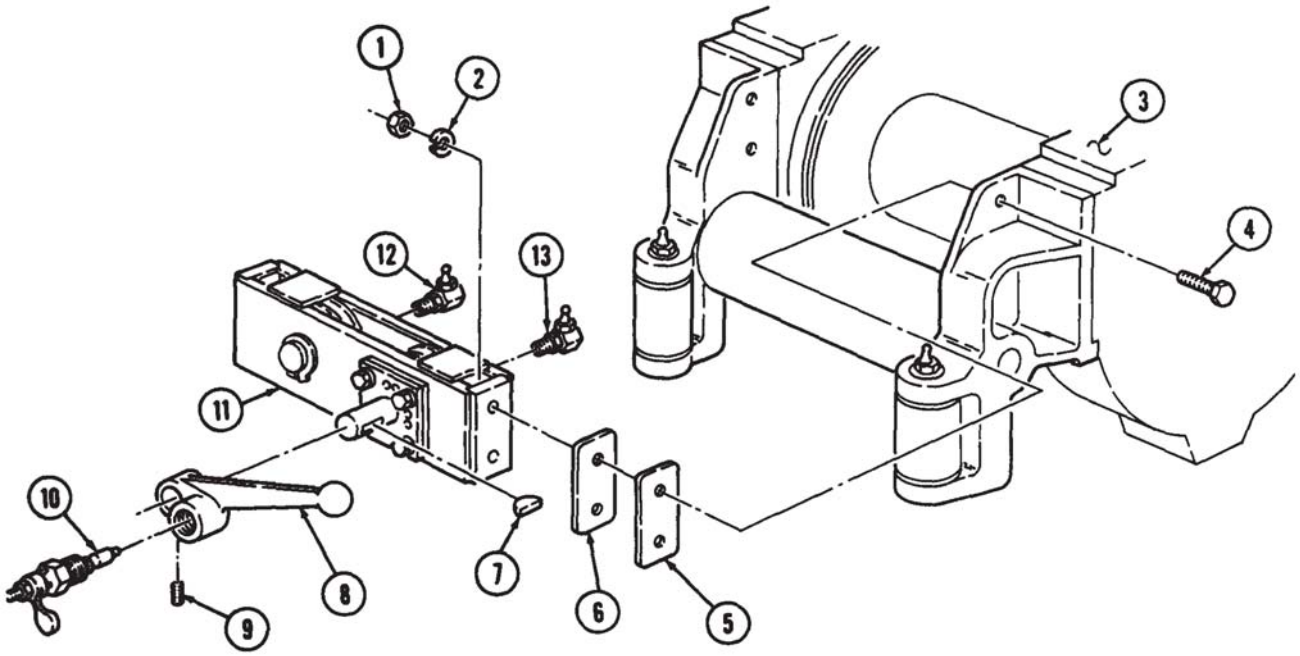

FOLLOW-ON TASKS: • Install winch cable, chain, and hook (para. 13-5).
• Lubricate front winch cable tensioner (TM 9-2320-260-12).

13-12. BOLSTER MIDWINCH REPLACEMENT

THIS TASK COVERS:

a. Removal **b. Installation**

INITIAL SETUP

APPLICABLE MODELS
M815

MATERIALS/PARTS
Eight locknuts
Eight lockwashers

REFERENCES (TM)
TM 9-2320-260-10
TM 9-2320-260-20P

EQUIPMENT CONDITION
- Parking brake set (TM 9-2320-260-10).
- Winch cable, chain, and hook removed (para. 13-5).
- Bolster midwinch drivechain and sprockets removed (para. 13-13).

GENERAL SAFETY INSTRUCTIONS
All personnel must stand clear during lifting operations.

a. Removal

1. Install chains on winch (2) and lifting device.
2. Remove eight screws (3) and locknuts (5) from two mounting flames (4) and mounting bracketa (1). Discard locknuts (5).

WARNING

All personnel must stand clear during lifting operations. A swinging or shifting load may cause injury to personnel.

NOTE

Assistant will help with step 3.

3. Raise winch (2) and brackets (1) from vehicle and lower winch (2) onto supports.
4. Remove chains from winch (2) and lifting device.
5. Remove eight screws (7), lockwashers (6), and two brackets (1) from winch (2). Discard lockwashers (6).
6. Remove two wood sills (8) from rails (9).

b. Installation

1. Install two mounting brackets (1) on winch (2) with eight new lockwashers (6) and screws (7).
2. Position two wood sills (8) on rails (9).
3. Install chains on winch (2) and lifting device.

WARNING

All personnel must stand clear during lifting operations. A swinging or shifting load may cause injury to personnel.

NOTE

Assistant will help with step 4.

4. Raise and position winch (2) and brackets (1) on vehicle.
5. Install two brackets (1) on mounting frames (4) with eight screws (3) and new locknuts (5).
6. Remove chains from winch (2) and lifting device.

13-12. BOLSTER MIDWINCH REPLACEMENT (Contd)

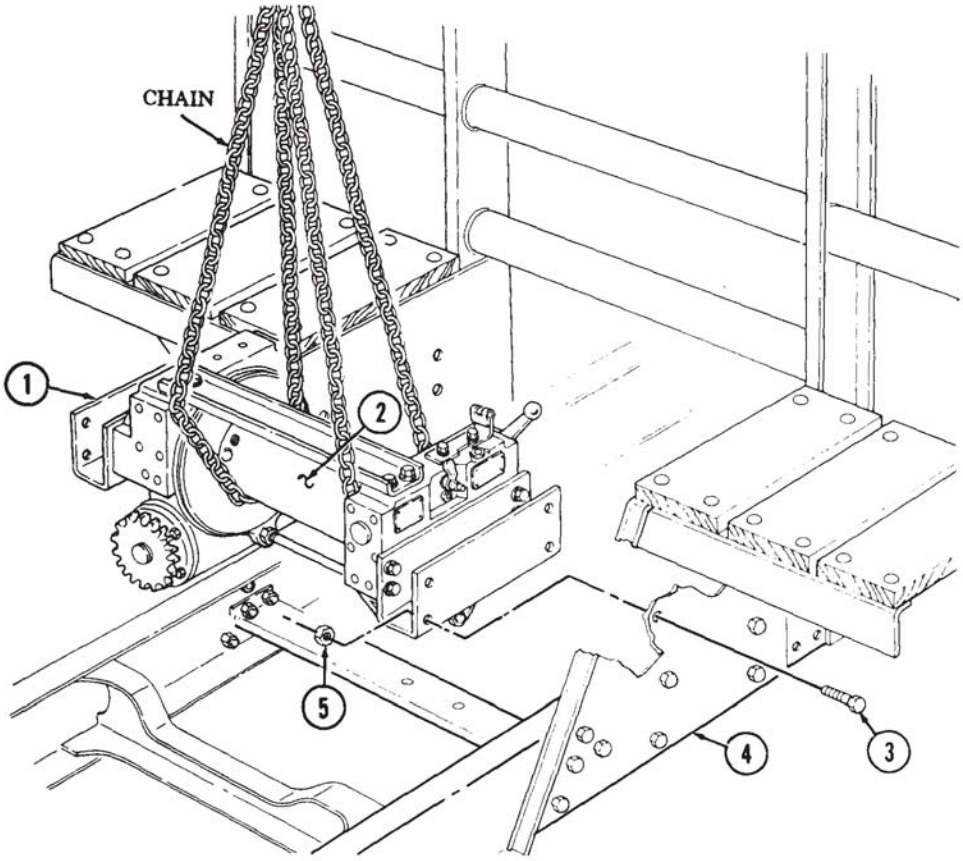

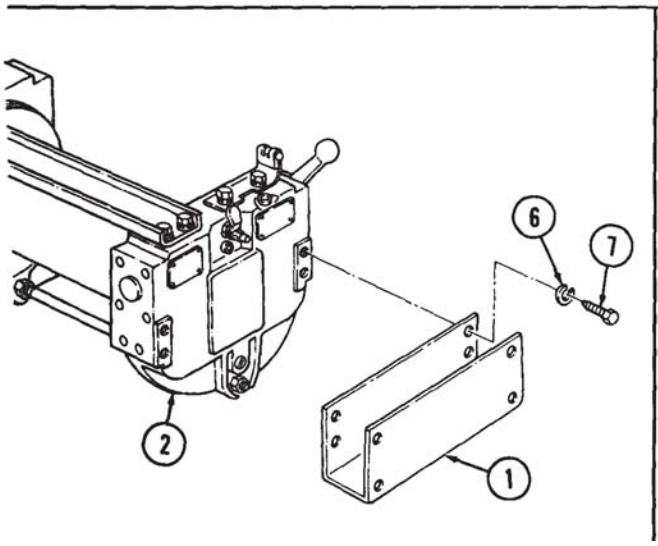

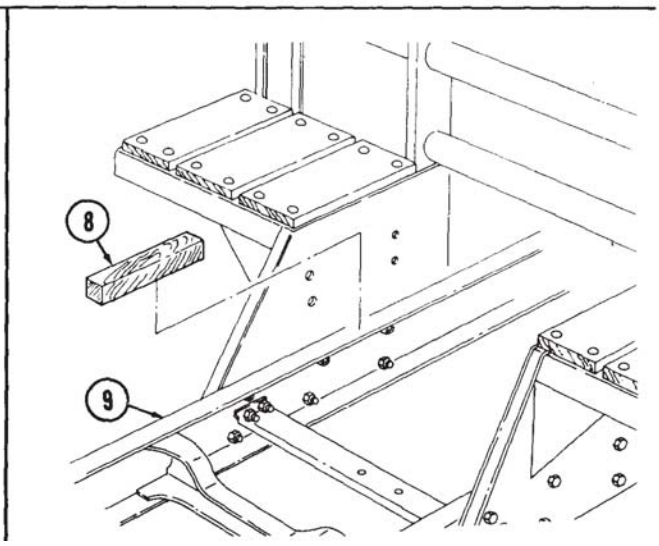

FOLLOW-ON TASKS: • Install bolster midwinch drivechain and sprockets (para. 13-13).
• Install winch cable, chain, and hook (para. 13-5).
• Check winch for proper operation (TM 9-2320-260-10).

13-13. BOLSTER MIDWINCH DRIVECHAIN AND SPROCKETS MAINTENANCE

THIS TASK COVERS:

a. Drivechain Removal
b. Sprockets Removal
c. Cleaning and Inspection
d. Sprockets Installation
e. Drivechain Installation
f. Drivechain Adjustment

INITIAL SETUP

APPLICABLE MODELS
M815

MATERIALS/PARTS
Two locknuts
Four cotter pins
Two woodruff keys
Drycleaning solvent (Appendix C, Item 29)
Rags (Appendix C, Item 22)

REFERENCES (TM)
LO 9-2320-260-12
TM 9-2320-260-10
TM 9-2320-260-20P

EQUIPMENT CONDITION
Parking brake set (TM 9-2320-260-10).

GENERAL SAFETY INSTRUCTIONS
Keep fire extinguisher nearby when using drycleaning solvent.

a. Drivechain Removal

1. Rotate drivechain (15) to gain access to master link (19).
2. Remove two cotter pins (17), cap (18), master link (19), and dnvechain (15) from midwinch sprocket (1) and propeller shaft sprocket (10). Discard cotter pins (17).

b. Sprockets Removal

1. Remove two locknuts (8) and screws (14) from sleeve bearing (11) and support bracket (16). Discard locknuts (8).
2. Remove lubrication fitting (13) and remove woodruff key (5), collar (12), and sleeve bearing (11) from propeller shaft (7). Discard woodruff key (5).
3. Remove setscrew (9) and remove propeller shaft sprocket (10) and woodruff key (6) from propeller shaft (7). Discard woodruff key (6).
4. Remove two cotter pins (3), shearpin (2), and midwinch sprocket (1) from midwinch shaft (4). Discard cotter pins (3).

c. Cleaning and Inspection

WARNING

Drycleaning solvent is flammable and will not be used near open flame. Use only in well-ventilated places. Failure to do so may result in injury to personnel. Keep fire extinguisher nearby when using drycleaning solvent.

1. Clean drivechain (15) and sprockets (1) and (10) with drycleaning solvent. Dry drivechain (15), and spockets (1) and (10) with a clean rag.
2. Inspect all parts for wear and damage. Replace parts if worn or damaged.

13-13. BOLSTER MIDWINCH DRIVECHAIN AND SPROCKETS MAINTENANCE (Contd)

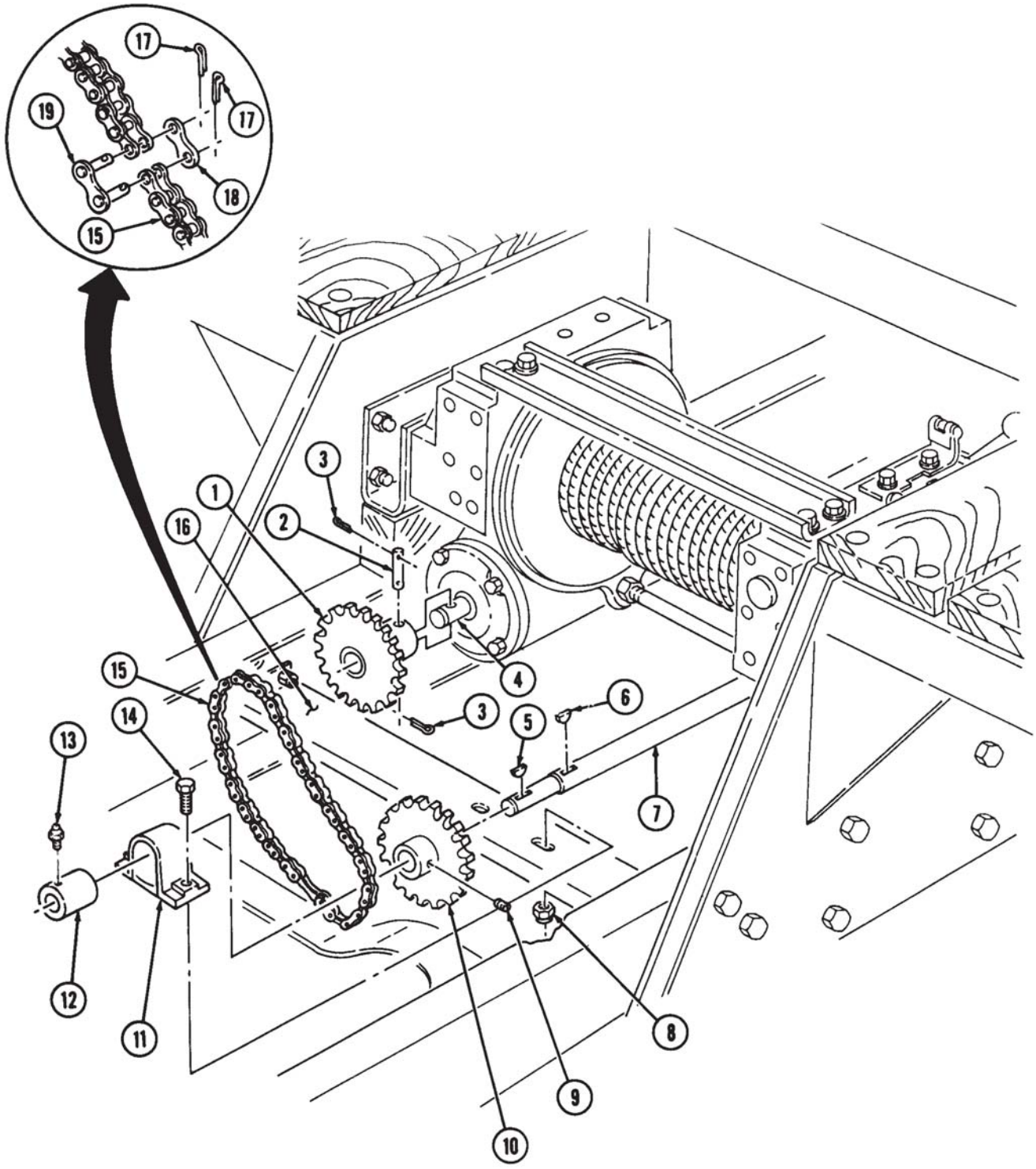

13-13. BOLSTER MIDWINCH DRIVECHAIN AND SPROCKETS MAINTENANCE (Contd)

d. Sprockets Installation

1. Install midwinch sprocket (1) on midwinch shaft (4) with shearpin (2) and new two cotter pins (3).
2. Position new woodruff key (6) and propeller shaft sprocket (10) on propeller shaft (7). Install setscrew (9).
3. Position sleeve bearing (11), new woodruff key (5), and collar (12) on propeller shaft (7). Install lubrication fitting (13).
4. Install sleeve bearing (11) on support bracket (16) with two screws (14) and new locknuts (8). Do not tighten lockhuts (8).

e. Drivechain Installation

1. Position drivechain (15) on midwinch sprocket (1) and propeller shaft sprocket (10). If drivechain (15) ends will not meet, perform adjustment (task f).
2. Install master link (19) and cap (18) on drivechain (15) with two new cotter pins (17).

f. Drivechain Adjustment

1. Using a straight edge as a gage, measure 7/16-9/16-in. (1.1-1.4-cm) deflection at upper midpoint of drivechain (15). If deflection is not correct, record measurement and adjust drivechain (15).
2. Slide sleeve bearing (11) right or left in slotted holes on support bracket (16) to tighten or loosen drivechain (15).
3. Repeat steps 1 and 2.
4. Tighten locknuts (8) when proper deflection is obtained.

13-13. BOLSTER MIDWINCH DRIVECHAIN AND SPROCKETS MAINTENANCE (Contd)

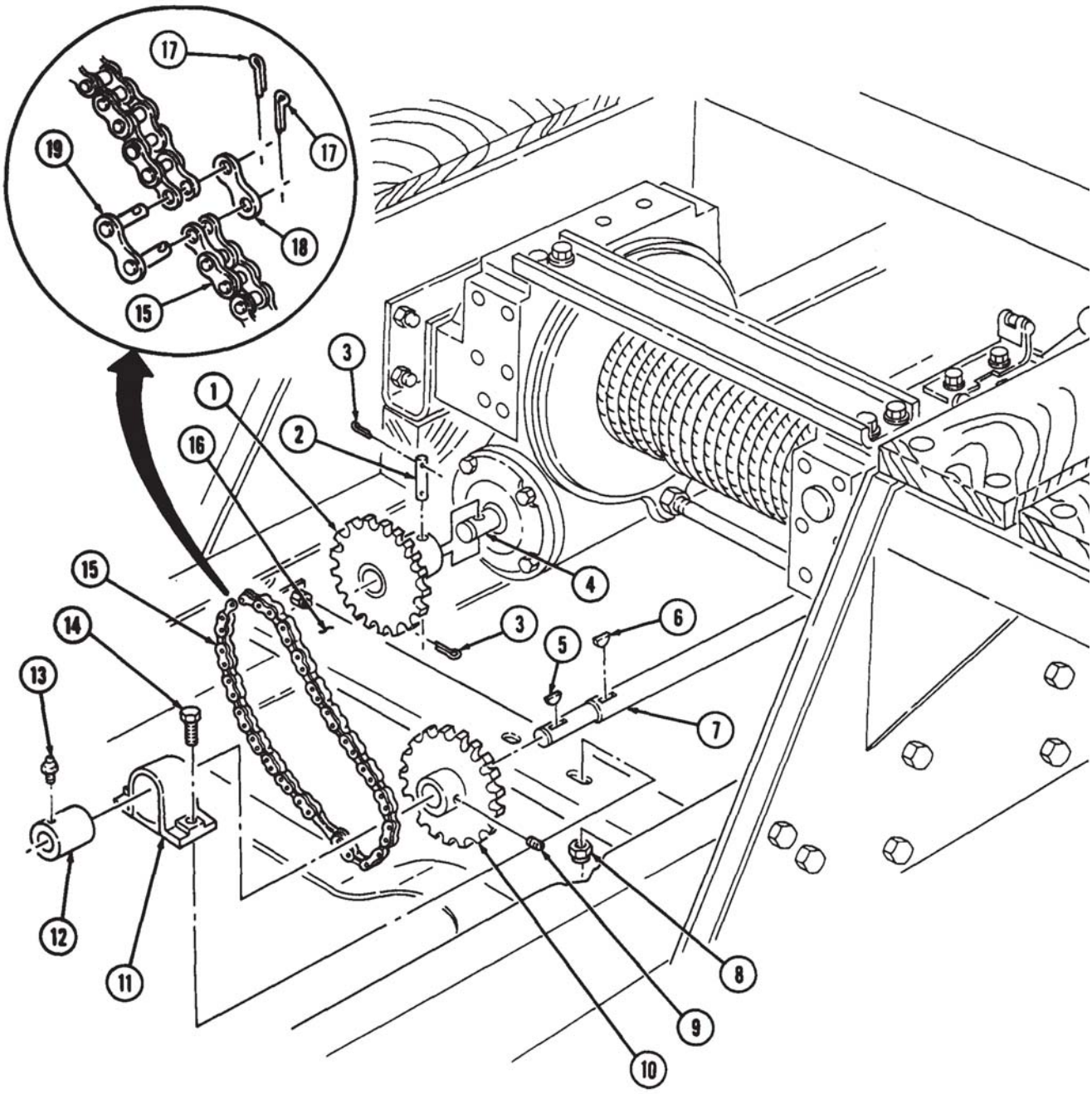

FOLLOW-ON TASKS: • Lubricate drivechain, sprocket, and pillow block (LO 9-2320-260-12).
• Operate midwinch several times to check for proper operation (TM 9-2320-260-10).

13-14. BOLSTER MIDWINCH PROPELLER SHAFT REPLACEMENT

THIS TASK COVERS:

a. Removal

b. Installation

INITIAL SETUP

APPLICABLE MODELS
M815 W/W

MATERIALS/PARTS
Two woodruff keys

REFERENCES (TM)
TM 9-2320-260-10
TM 9-2320-260-20P

EQUIPMENT CONDITION
- Parking brake set (TM 9-2320-260-10).
- Bolster midwinch drivechain and sprockets removed (para. 13-13).

a. Removal

1. Remove setscrew (3) and shaft (7) from universal joint (5).
2. Remove woodruff key (6) from shaft (7). Discard woodruff key (6).
3. Remove setscrew (4) from universal joint (5).
   Remove universal joint (5) and woodruff key (1) from PTO shaft (2). Discard woodruff key (1).

b. Installation

1. Install new woodruff key (1) and universal joint (5) on PTO shaft (2) with setscrew (4).
2. Install new woodruff key (6) on shaft (7).
3. Install shaft (7) on universal joint (5) with setscrew (3).

13-14. BOLSTER MIDWINCH PROPELLER SHAFT REPLACEMENT (Contd)

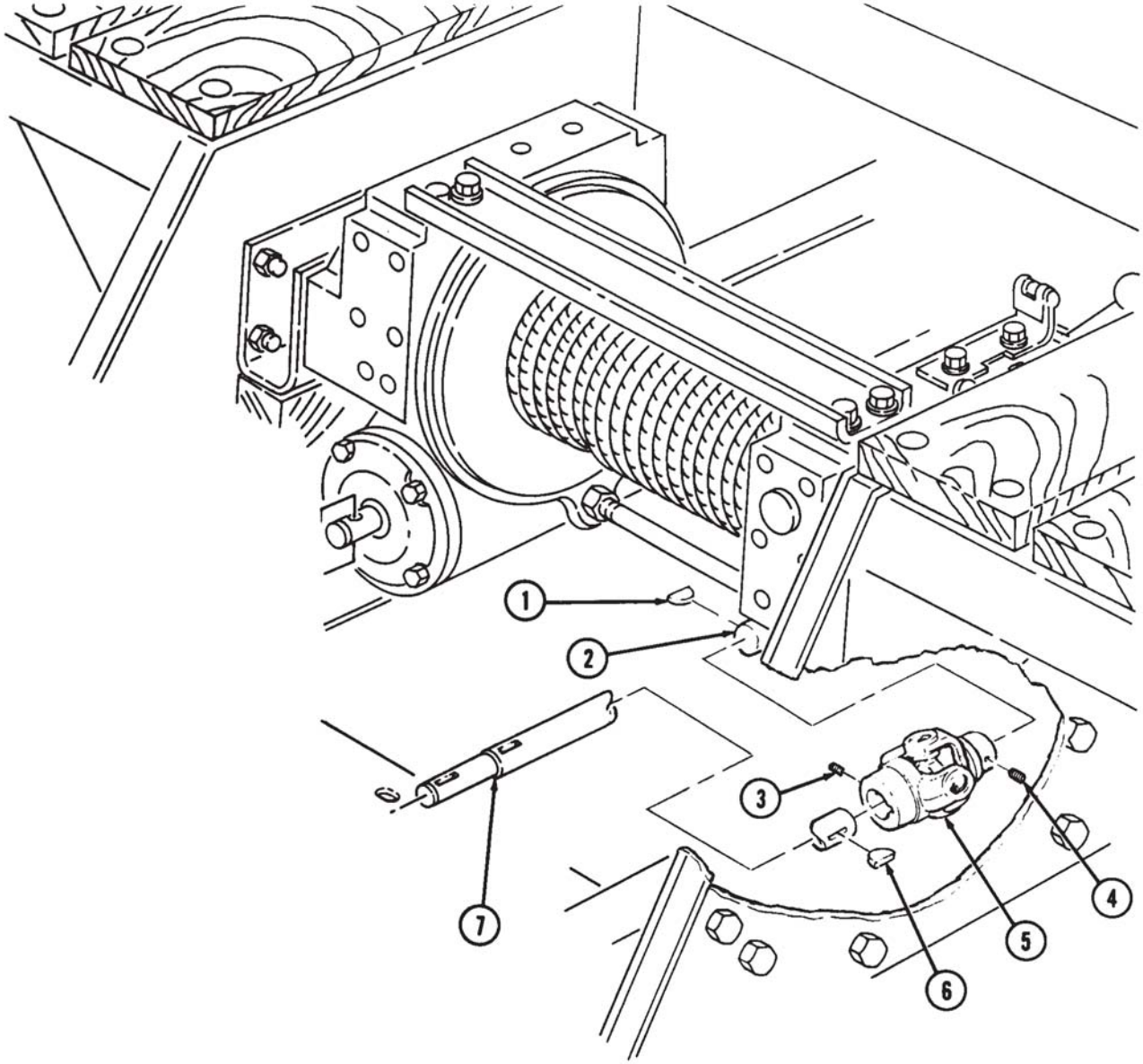

FOLLOW-ON TASK: Install bolster midwinch drivechain and sprockets (para. 13-13).

13-15. REAR WINCH REPLACEMENT

THIS TASK COVERS:

a. Removal **b. Installation**

INITIAL SETUP

APPLICABLE MODELS
M816

MATERIALS/PARTS
Three cotter pins
Four locknuts

REFERENCES (TM)
TM 9-2320-260-10
TM 9-2320-260-20P

EQUIPMENT CONDITION
- Parking brake set (TM 9-2320-260-10).
- Boom jack base plates removed (TM 9-2320-260-10).
- Rear winch drivechain and sprockets removed (para. 13-17).
- Winch cable, chain, and hook removed (para. 13-5).

GENERAL SAFETY INSTRUCTIONS
All personnel must stand clear during lifting operations.

a. Removal

1. Remove cotter pin (1), retaining pin (4), and yoke (3) from tensioner lever (2). Discard cotter pin (1).
2. Remove cotter pin (8), washer (9), and swivel block (7) from bracket (11). Discard cotter pin (8).
3. Remove cotter pin (10), retaining pin (12), and yoke (6) from lever (5). Discard cotter pin (10).
4. Install chains on rear winch (13) and lifting device.

NOTE

Assistant will help with steps 5 and 6.

5. Remove four locknuts (14), washers (15), and screws (16) from rear winch (13) and wrecker body (17). Discard locknuts (14).

WARNING

All personnel must stand clear during lifting operations. A swinging or shifting load may cause injury or death to personnel.

6. Remove rear winch (13) from wrecker body (17) and lower rear winch (13) onto supports.
7. Remove chains from lifting device and rear winch (13).

13-15. REAR WINCH REPLACEMENT Contd)

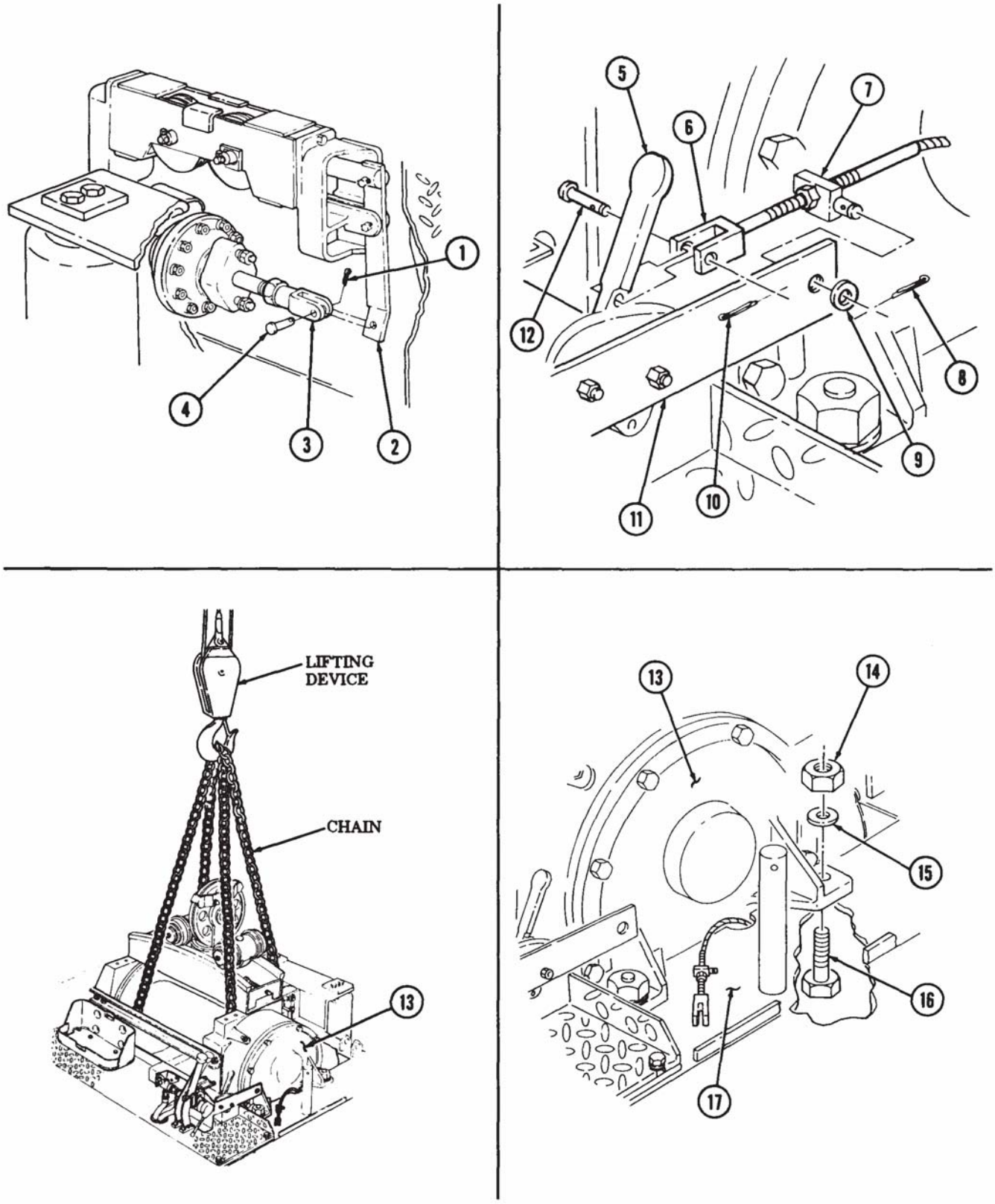

13-15. REAR WINCH REPLACEMENT (Contd)

b. Installation

1. Install chains on rear winch (1) and lifting device.

WARNING

All personnel must stand clear during lifting operations. A swinging or shifting load may cause injury or death to personnel.

NOTE

Assistant will help with steps 2 and 3.

2. Raise rear winch (1) from supports and position rear winch (1) on wrecker body (5).
3. Install rear winch (1) on wrecker body (5) with four screws (4), washers (3), and new locknuts (2). Tighten locknuts (2) 200-235 lb-ft (271-319 N•m).
4. Remove chains from lifting device and rear winch (1).
5. Install swivel block (8) on bracket (12) with washer (10) and new cotter pin (9).
6. Install yoke (7) on lever (6) with retaining pin (13) and new cotter pin (11).
7. Install yoke (16) on tensioner lever (15) with retaining pin (17) and new cotter pin (14).

13-15. REAR WINCH REPLACEMENT (Contd)

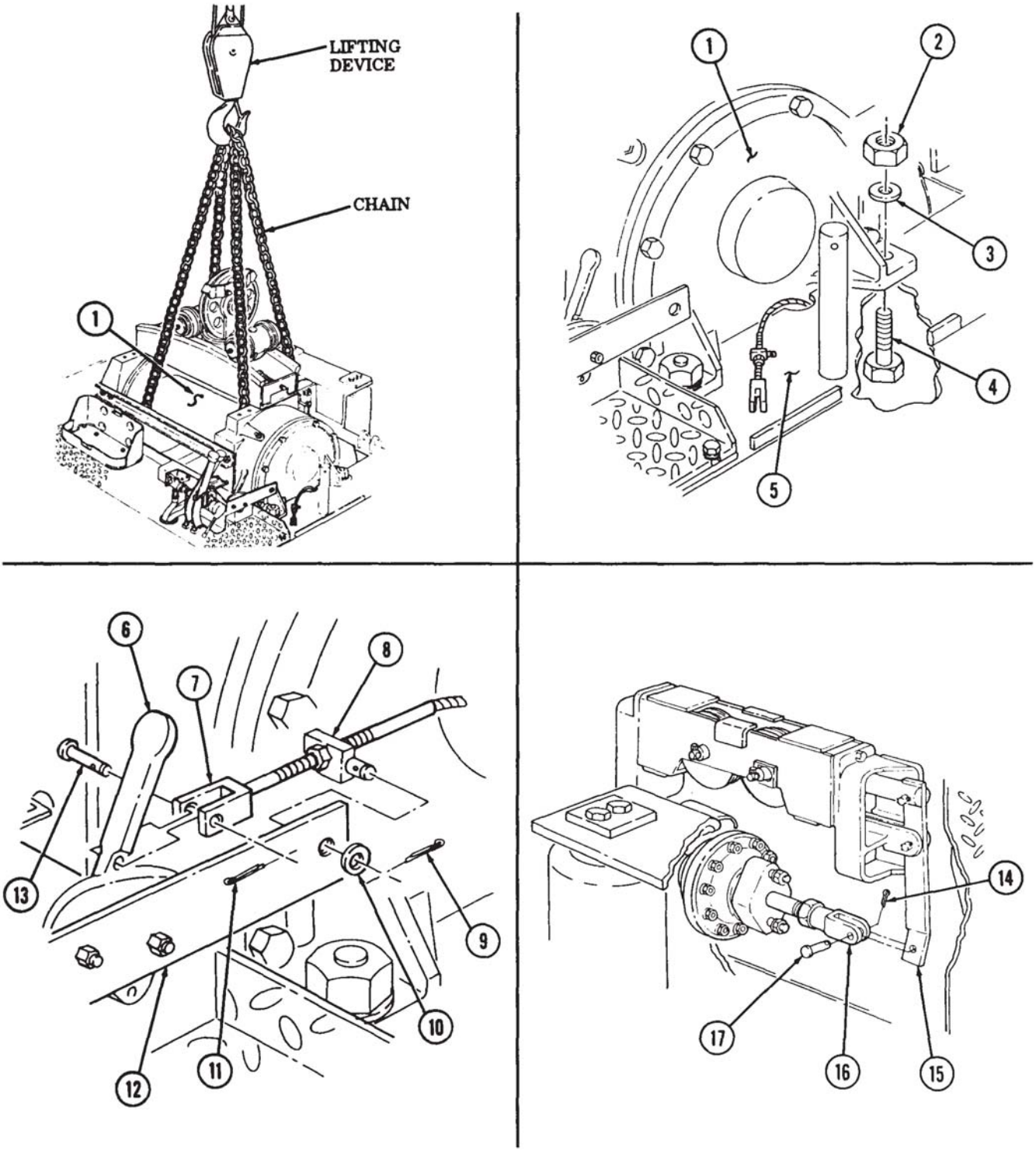

FOLLOW-ON TASKS:
- Install boom jack base plates (TM 9-2320-260-10).
- Install rear winch drivechain and sprockets (para. 13-17).
- Install winch cable, chain, and hook (para. 13-5).
- Check rear winch for proper operation (TM 9-2320-260-10).

13-16. REAR WINCH PROPELLER SHAFT MAINTENANCE

THIS TASK COVERS:

a. Removal
b. Cleaning and Inspection
c. Installation

INITIAL SETUP

APPLICABLE MODELS
M816

MATERIALS/PARTS
GAA grease (Appendix C, Item 16)

REFERENCES (TM)
TM 9-2320-260-10
TM 9-2320-260-20P

EQUIPMENT CONDITION
- Parking brake set (TM 9-2320-260-10).
- Rear winch driveshaft housing removed (para. 13-23).
- Wrecker rear winch cable rollers removed (para. 13-21).

a. Removal

Remove propeller shaft (2) from yoke (4) and sleeve bearing (3) and route through three rear crossmembers (1).

b. Cleaning and Inspection

Inspect propeller shaft (2) for breaks, cracks, bends, and damaged splines. Replace propeller shaft (2) if damaged.

c. Installation

Apply GAA grease to the splines of propeller shaft (2), route propeller shaft (2) through three rear crossmembers (1) and sleeve bearing (3), and install into yoke (4).

13-16. REAR WINCH PROPELLER SHAFT MAINTENANCE (Contd)

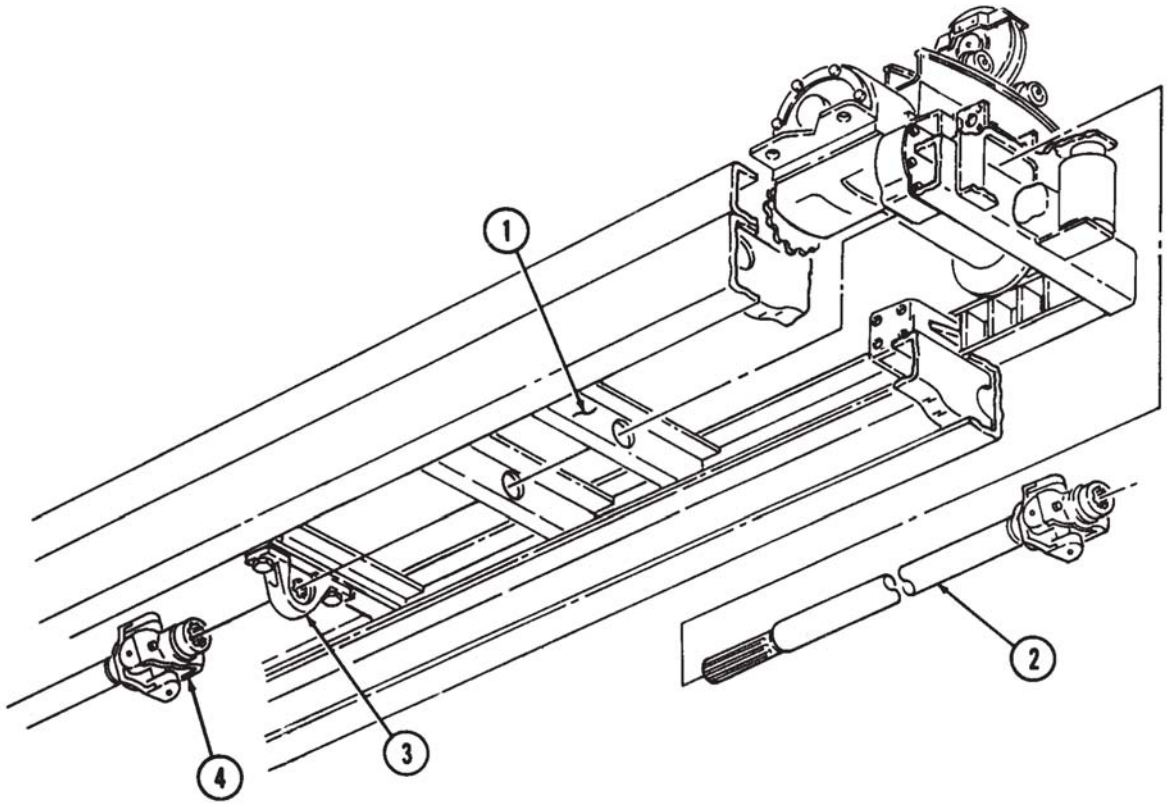

FOLLOW-ON TASKS: • Install rear winch driveshaft housing (para. 13-23).
• Install wrecker rear winch cable rollers (para. 13-21).

13-17. REAR WINCH DRIVECHAIN AND SPROCKETS MAINTENANCE

THIS TASK COVERS:

a. DriveChain Removal
b. Sprockets Removal
c. Cleaning and Inspection
d. Sprockets Installation
e. Drivechain Installation
f. Adjustment

INITIAL SETUP

APPLICABLE MODELS

M816

MATERIALS/PARTS

Three cotter pins
Lockwasher
Four locknuts
GAA grease (Appendix C, Item 16)
Drycleaning solvent (Appendix C, Item 29)
Rags (Appendix C, Item 22)

REFERENCES (TM)

TM 9-2320-260-10
TM 9-2320-260-20P

EQUIPMENT CONDITION

- Parking brake set (TM 9-2320-260-10).
- Deckplate removed (para. 12-56).

GENERAL SAFETY INSTRUCTIONS

Keep fire extinguisher nearby when using drycleaning solvent.

a. Drivechain Removal

1. Rotate drivechain (1) as necessary to gain access to master link (13).
2. Remove two cotter pins (11), cap (12), master link (13), and drivechain (1) from rear winch sprocket (8) and sprocket (5). Discard cotter pins (11).

b. Sprockets Removal

1. Remove screw (2), lockwasher (3), washer (4), and sprocket (5) from splined shaft (6). Discard lockwasher (3).
2. Remove cotter pin (9) from shearpin (7). Discard cotter pin (9).
3. Remove shearpin (7) from sprocket (8).
4. Remove rear winch sprocket (8) from rear winch shaft (10).

c. Cleaning and Inspection

WARNING

Drycleaning solvent is flammable and will not be used near open flame. Use only in well-ventilated places. Keep fire extinguisher nearby when using drycleaning solvent. Failure to do so may result in injury to personnel.

1. Clean drivechain (1) and sprockets (5) and (8) with drycleaning solvent.
2. Inspect all parts for wear or damage. Replace parts if worn or damaged.

d. Sprockets Installation

1. Apply light coat of GAA grease on shearpin (7) and install rear winch sprocket (8) on rear winch shaft (10) with shearpin (7) and new cotter pin (9).
2. Install sprocket (5) on splined shaft (6) with washer (4), new lockwasher (3), and screw (2). Tighten screw (2) 44-61 lb-ft (60-83 N•m).

13-17. REAR WINCH DRIVECHAIN AND SPROCKETS MAINTENANCE (Contd)

e. Drivechain Installation

1. Position drivechain (1) on rear winch sprocket (8) and sprocket (5). If drivechain (1) ends will not meet, perform adjustment (task f).
2. Install master link (13) and cap (12) on drivechain (1) with two new cotter pins (11).

f. Adjustment

1. Check deflection at upper midpoint of drivechain (1). Deflection should be 7/16-9/16-in. (1.1-1.4-cm). If deflection is not correct, record measurement and remove two locknuts (17) and (18), two studs (19), screws (14), and driveshaft housing (20) from frame (16). Discard locknuts (17) and (18)-
2. Add or subtract shims (15) as needed and install driveshaft housing (20) on frame (16) with two studs (19), screws (14), and two new locknuts (17) and (18). Tighten locknuts (17) and (18) 44-61 lb-ft (60-83 N•m).
3. Install drivechain (1) and check adjustment.

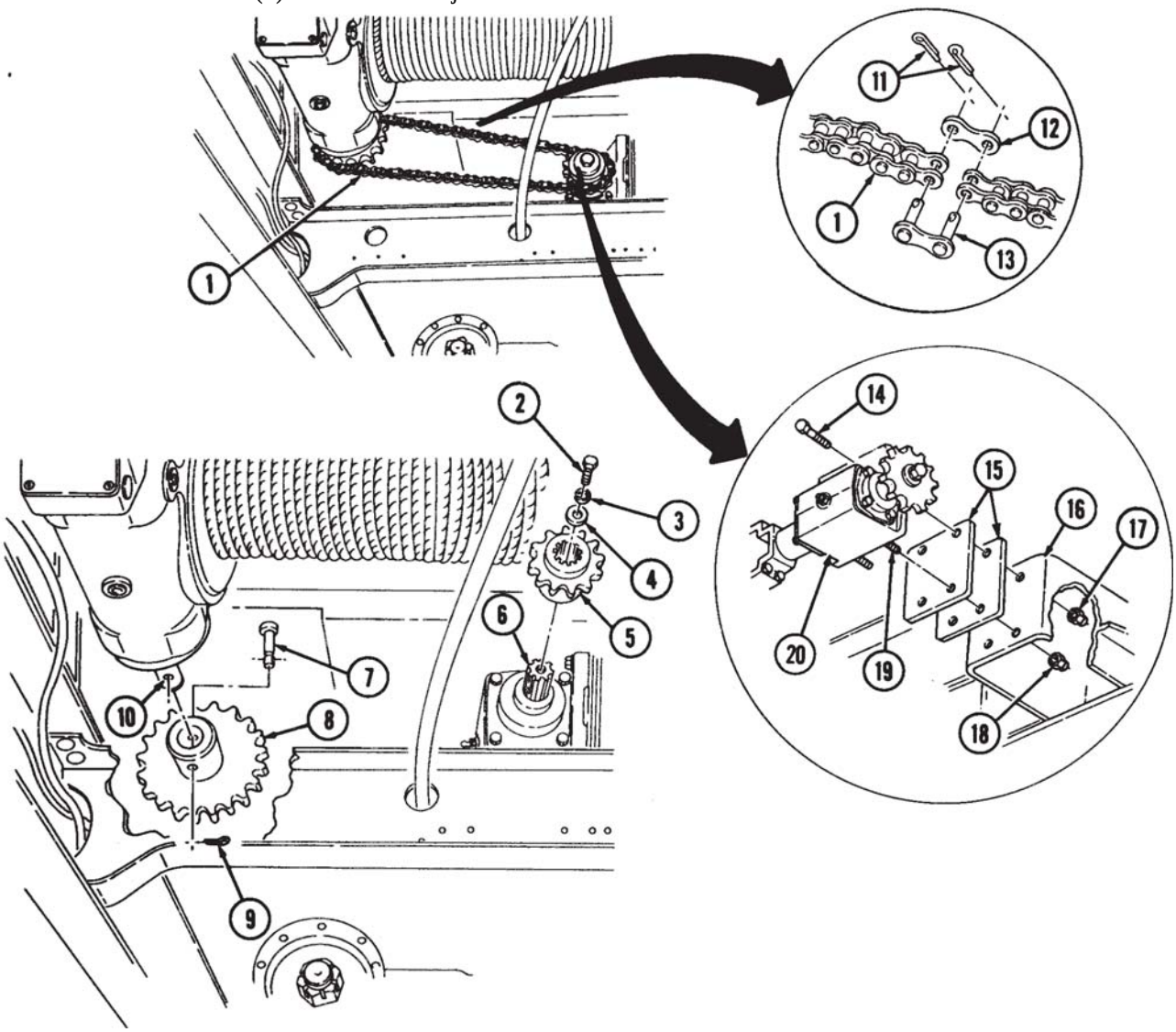

FOLLOW-ON TASK: Install deckplate (para. 12-56).

13-18. REAR WINCH CONTROLS MAINTENANCE

THIS TASK COVERS:

a. Removal
b. Inspection
c. Installation
d. Adjustment

INITIAL SETUP

APPLICABLE MODELS
M816

MATERIALS/PARTS
Four cotter pins

REFERENCES (TM)
TM 9-2320-260-10
TM 9-2320-260-20P

EQUIPMENT CONDITION
- Parking brake set (TM 9-2320-260-10).
- Deckplate removed (para. 12-56).

a. Removal

1. Remove two cotter pins (4), retaining pins (3), and clevis yokes (1) from levers (2). Discard cotter pins (4).
2. Remove two clevis yokes (1) and jamnuts (10) from rods (5).
3. Remove two rods (5) from couplings (6).
4. Remove two couplings (6) from rods (7).
5. Remove two jamnuts (8) and (9) from rods (5) and (7).

b. Inspection

1. Inspect two rods (5) for bends, cracks, and breaks. Replace rods (5) if damaged.
2. Inspect two couplings (6) for cracks, breaks, and stripped threads. Replace couplings (6) if damaged.
3. Inspect two clevis yokes (1) for cracks, breaks, and wear. Replace clevis yokes (1) if damaged.

c. Installation

1. Position two jamnuts (8) and couplings (6) on rods (7).
2. Install two jamnuts (9) on rods (5).
3. Install rods (5) into couplings (6).
4. Install two jamnuts (10) on rods (5).
5. Install two clevis yokes (1) on rods (5).
6. Install two clevis yokes (1) on levers (2) with retaining pins (3) and new cotter pins (4).
7. Tighten jamnuts (10), (9), and (8).

d. Adjustment

1. Remove two cotter pins (4), retaining pins (3), and clevis yokes (1) from levers (2). Discard cotter pins (4).
2. Loosen two jamnuts (10) and turn clevis yokes (1) until retaining pins (3) fit freely through clevis yokes (1) and levers (2).
3. Tighten jamnuts (10) and install clevis yokes (1) on levers (2) with two retaining pins (3) and new cotter pins (4).

13-18. REAR WINCH CONTROLS MAINTENANCE (Contd)

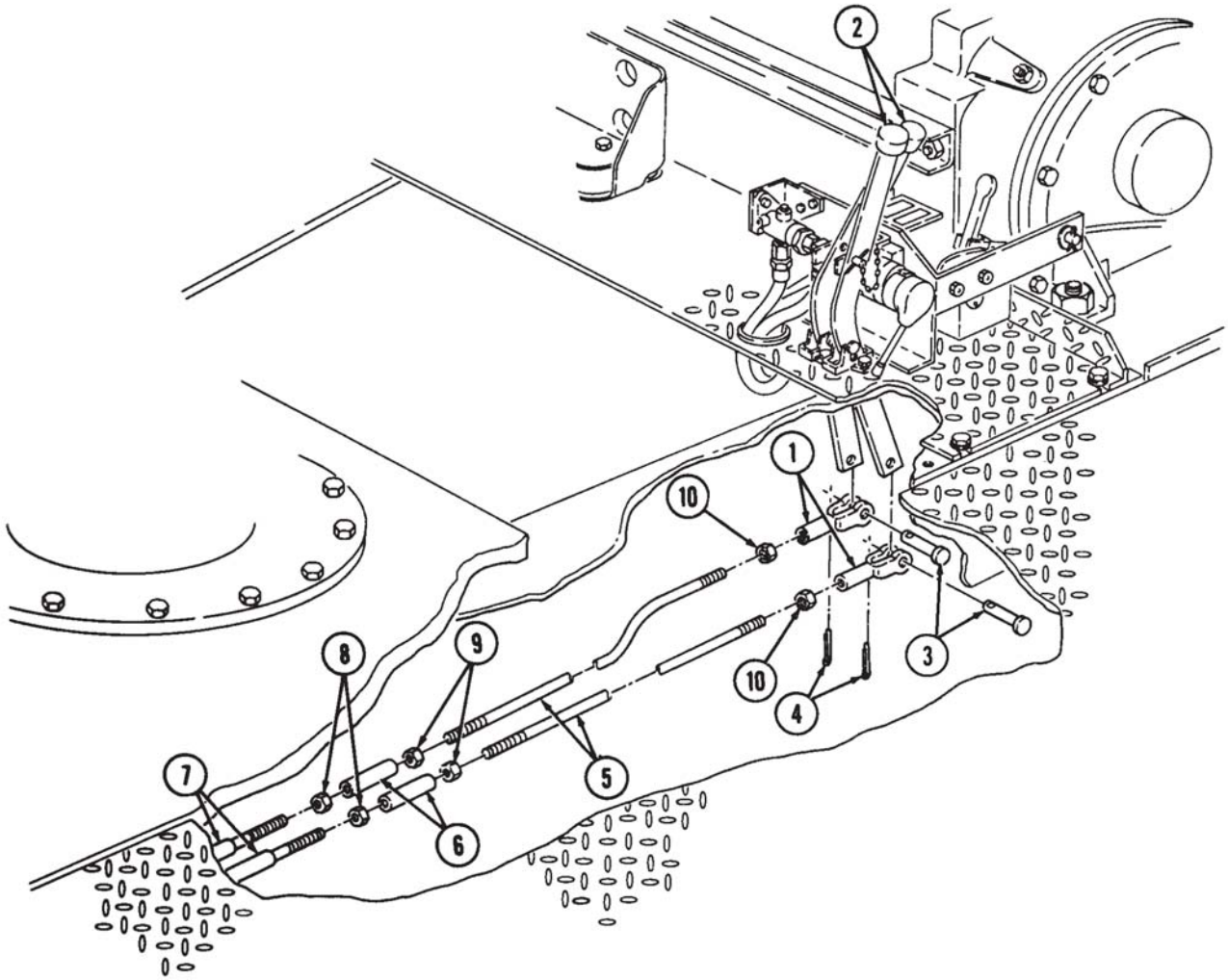

FOLLOW-ON TASK: Install deckplat.e (para. 12-56).

13-19. ENGINE CLUTCH CONTROL LEVER REPLACEMENT

THIS TASK COVERS:

a. Removal **b. Installation**

INITIAL SETUP

APPLICABLE MODELS
M816

EQUIPMENT CONDITION
Parking brake set (TM 9-2320-260-10).

REFERENCES (TM)
TM 9-2320-260-10
TM 9-2320-260-20P

a. Removal

1. Remove two connectors (5) from fittings (4).
2. Remove two screws (1) and control lever (3) from mounting bracket (2).
3. Remove two fittings (4) from control lever (3).

b. Installation

1. Install two fittings (4) on control lever (3).
2. Install control lever (3) on mounting bracket (2) with two screws (1).
3. Install two connectors (5) on fittings (4).

13-19. ENGINE CLUTCH CONTROL LEVER REPLACEMENT (Contd)

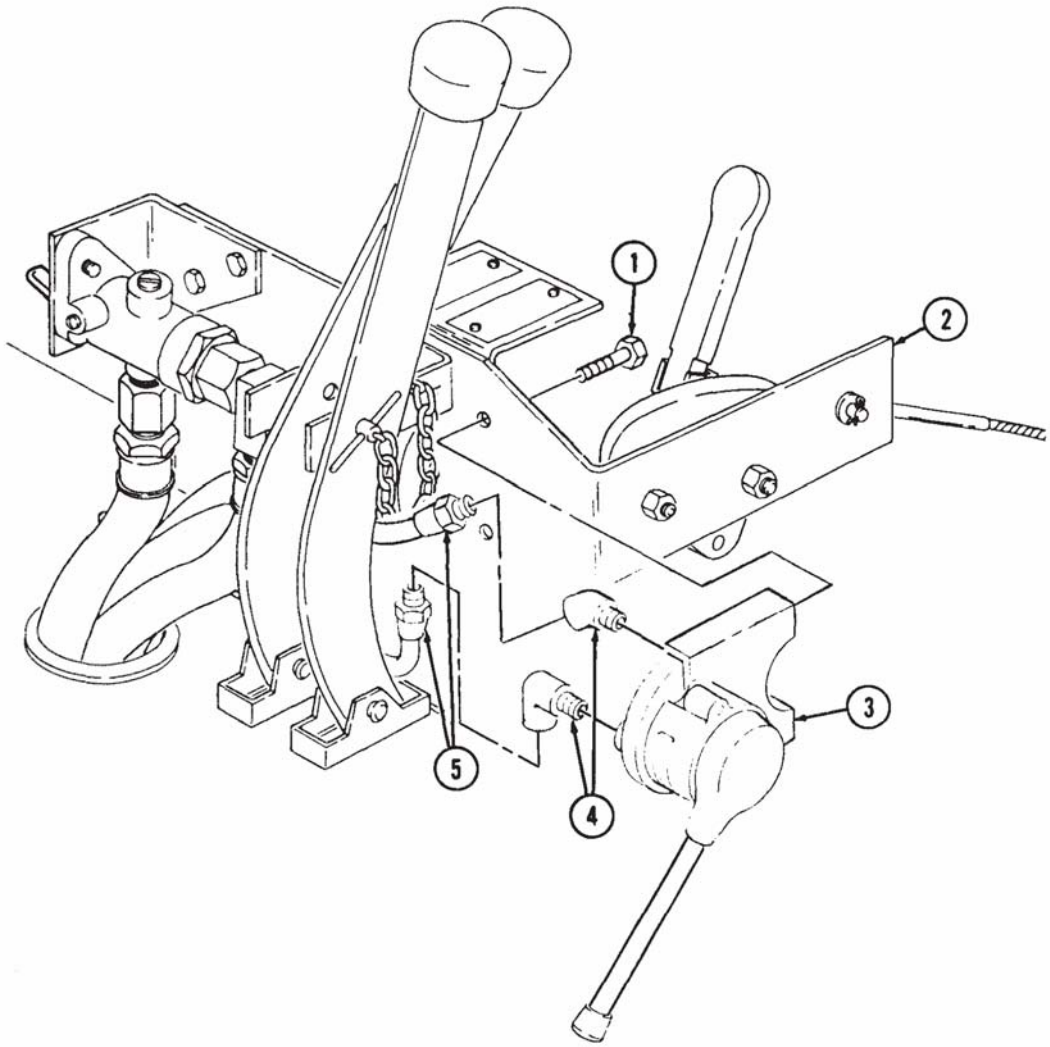

13-20. REAR WINCH CABLE TENSIONER VALVE REPLACEMENT

THIS TASK COVERS:

a. Removal **b. Installation**

INITIAL SETUP

APPLICABLE MODELS
M816

MATERIALS/PARTS
Two lockwashers

REFERENCES (TM)
TM 9-2320-260-10
TM 9-2320-260-20P

EQUIPMENT CONDITION
Parking brake set (TM 9-2320-260-10).

a. Removal

1. Remove connector (4) from valve (1).
2. Remove connector (3) from elbow fitting (2).
3. Remove two screws (7), lockwashers (6), and valve (1) from bracket (5). Discard lockwashers (6).
4. Remove elbow fitting (2) from valve (1).

b. Installation

1. Install elbow fitting (2) on valve (1).
2. Install valve (1) on bracket (5) with two new lockwashers (6) and screws (7).
3. Install connector (3) on elbow fitting (2).
4. Install connector (4) on valve (1).

13-20.

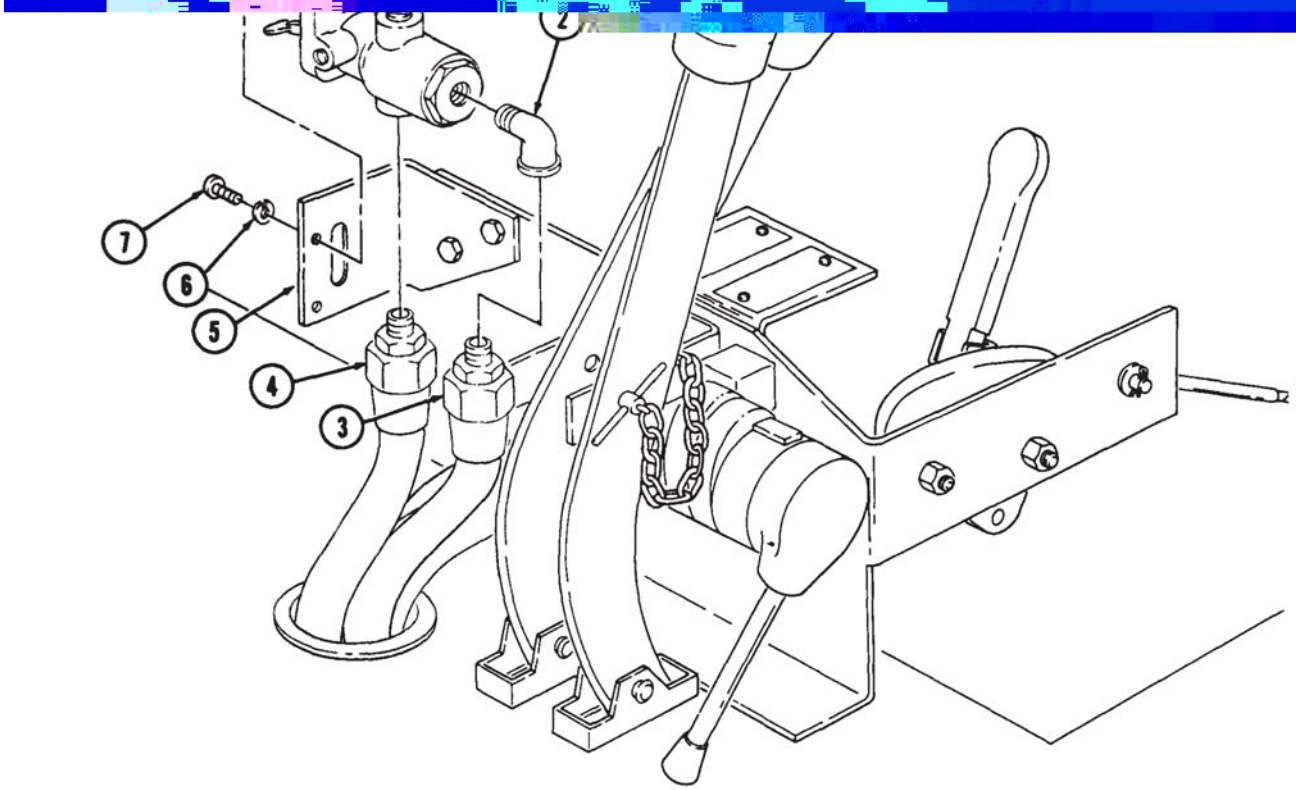

13-21. WRECKER REAR WINCH CABLE ROLLER REPLACEMENT

THIS TASK COVERS:

a. Removal **b. Installation**

INITIAL SETUP

APPLICABLE MODELS
M816

MATERIALS/PARTS
Four lockwashers

REFERENCES (TM)
TM 9-2320-260-10
TM 9-2320-260-20P

EQUIPMENT CONDITION
Parking brake set (TM 9-2320-260-10).

NOTE

All rear winch cable rollers are replaced basically the same. There are two rollers alined vertically, and two alined horizontally. This procedure is for vertically alined rollers.

a. Removal

1. Remove two screws (8), lockwashers (7), and plate (6) from bracket (5). Discard lockwashers (7).
2. Remove shaft (10) from roller (14).
3. Remove two lubrication fittings (9) from shaft (10).
4. Remove two screws (4), lockwashers (3), and plate (2) from bracket (5). Discard lockwashers (3).
5. Remove roller (14) from bracket (5).
6. Remove retainer (1), spacer (17), washer (16), bearings (15) and (13), washer (12), and spacer (11) from roller (14).

b. Installation

1. Install bearings (13) and (15), washer (12), spacer (11), washer (16), spacer (17), and retainer (1) on roller (14).
2. Position roller (14) on bracket (5).
3. Install plate (2) on bracket (5) with two new lockwashers (3) and screws (4).
4. Install two lubrication fittings (9) on shaft (10).
5. Position shaft (10) through roller (14) and install on bracket (5) with plate (6), two new lockwashers (7), and screws (8).

13-21. WRECKER REAR WINCH CABLE ROLLER REPLACEMENT (Contd)

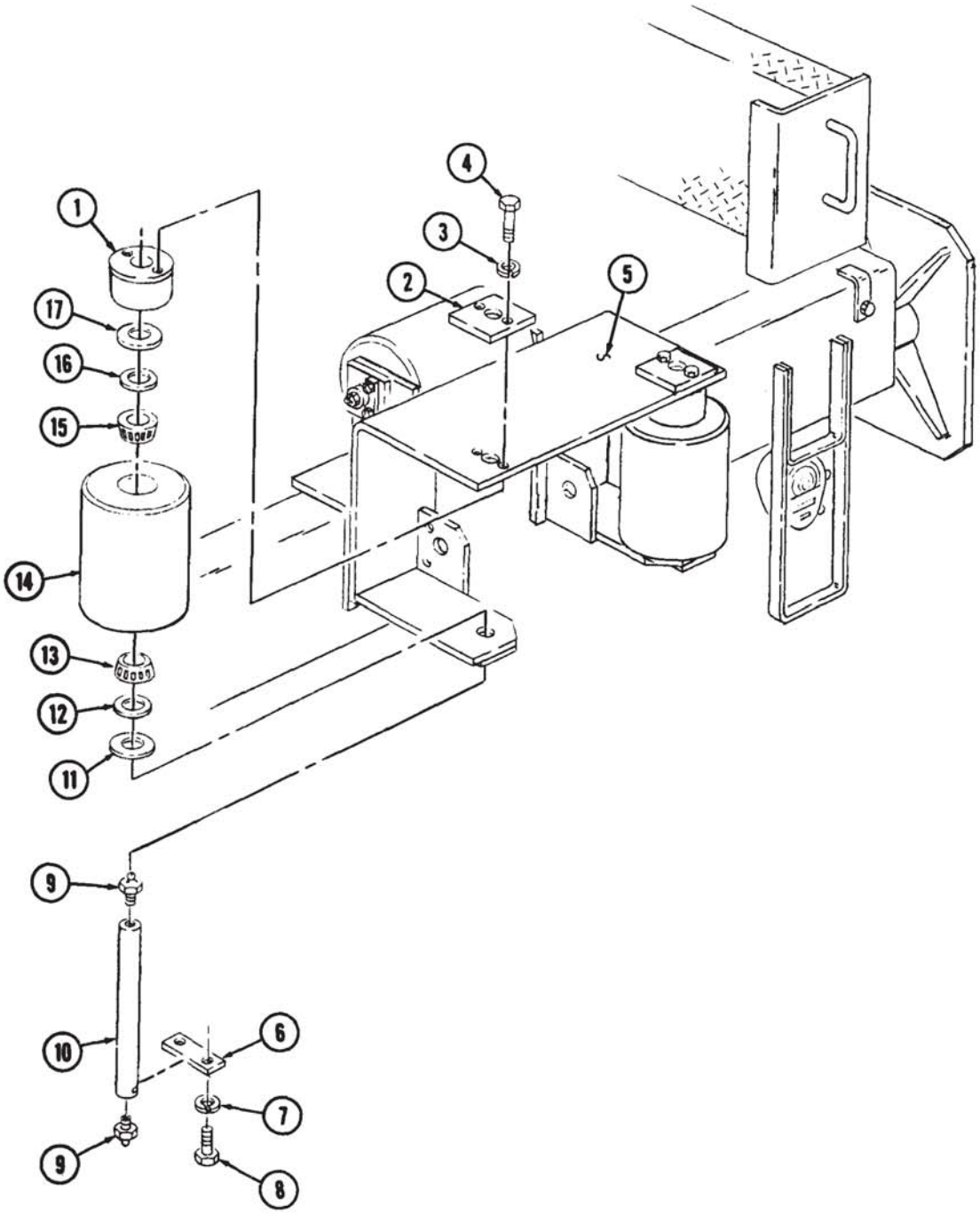

13-22. REAR WINCH AIRBRAKE CHAMBER REPLACEMENT

THIS TASK COVERS:

a. Removal

b. Installation

INITIAL SETUP

APPLICABLE MODELS

M816

MATERIALS/PARTS

Cotter pin
Two lockwashers

REFERENCES (TM)

TM 9-2320-260-10
TM 9-2320-260-20P

EQUIPMENT CONDITION

Parking brake set (TM 9-2320-260-10).

a. Removal

1. Remove connector (2) from fitting (1).
2. Remove fitting (1) from chamber (12).
3. Remove cotter pin (5) from retaining pin (7). Discard cotter pin (5).
4. Remove retaining pin (7) from clevis yoke (6) and lever (4).
5. Remove two nuts (9) and lockwashers (10) from chamber (12) and mounting bracket (3). Discard lockwashers (10).
6. Remove clevis yoke (6) and jamnut (8) from shaft (11).
7. Remove chamber (12) from mounting bracket (3).

b. Installation

1. Position chamber (12) on mounting bracket (3) and install with two new lockwashers (10) and nuts (9) on chamber (12).
2. Install jamnut (8) and clevis yoke (6) on shaft (11).
3. Position lever (4) on clevis yoke (6) and install with retaining pin (7) and new cotter pin (5).
4. Install fitting (1) on chamber (12).
5. Install connector (2) on fitting (1).

13-22. REAR WINCH AIRBRAKE CHAMBER REPLACEMENT (Contd)

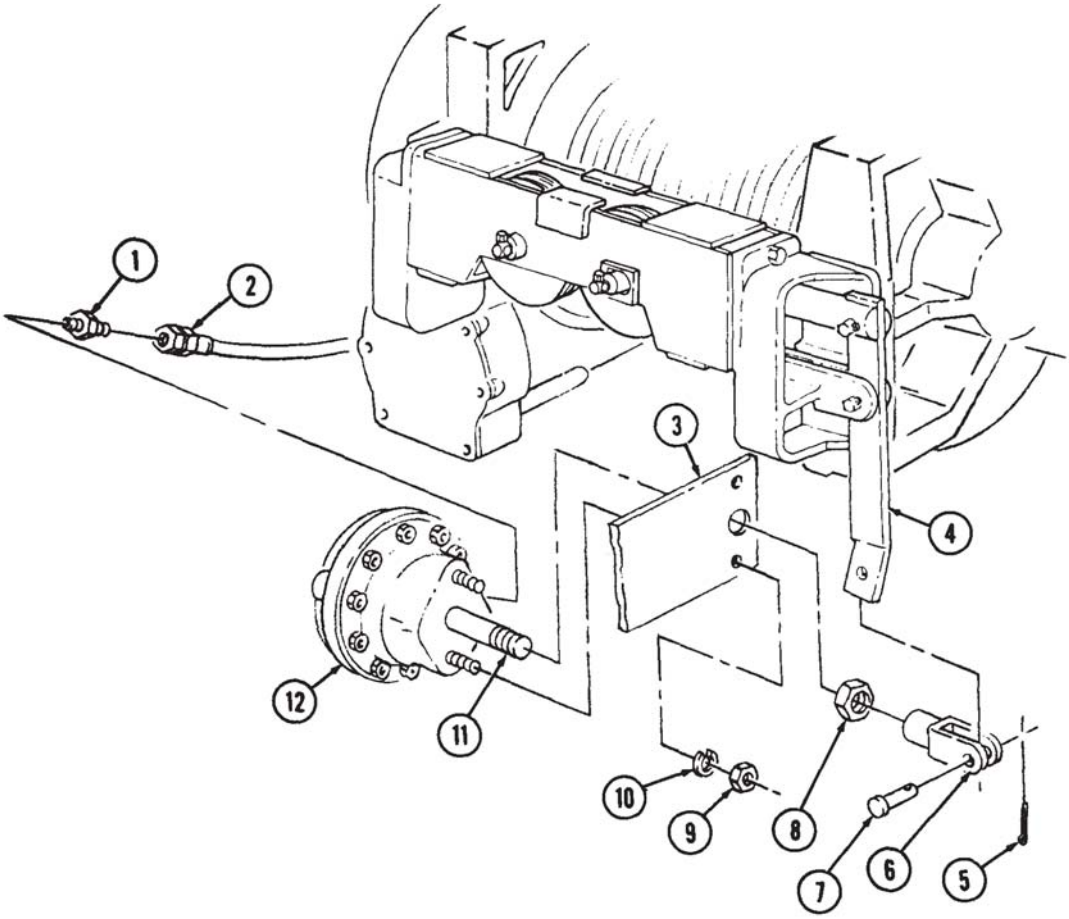

13-23. REAR WINCH DRIVESHAFT HOUSING MAINTENANCE

THIS TASK COVERS:

a. Removal
b. Disassembly
c. Cleaning and Inspection
d. Assembly
e. Installation

INITIAL SETUP

APPLICABLE MODELS

M816

MATERIALS/PARTS

Four locknuts
Two oil seals
Two gaskets
Eight lockwashers
Drycleaning solvent (Appendix C, Item 29)
Rags (Appendix C, Item 22)

REFERENCES (TM)

TM 9-214
TM 9-2320-260-10
TM 9-2320-260-20P

EQUIPMENT CONDITION

- Parking brake set (TM 9-2320-260-10).
- Rear winch drivechain and sprockets removed (para. 13-17).

GENERAL SAFETY INSTRUCTIONS

Keep fire extinguisher nearby when using drycleaning solvent.

a. Removal

1. Remove four locknuts (1), screws (2), rear winch driveshaft housing (3), and spacers (5) from mounting bracket (6). Discard locknuts (1).
2. Remove rear winch driveshaft housing (3) from yoke (4).

b. Disassembly

1. Remove four screws (10) and (18), lockwashers (11) and (17), covers (12) and (20), gaskets (8) and (16), oil seals (13) and (21), driveshaft (14), bearings (7) and (22), and lubrication fitting (15) from driveshaft housing (3). Discard gaskets (8) and (16), oil seals (13) and (21), and lockwashers (11) and (17).
2. Remove spacers (9) and (19) from covers (12) and (20).

WARNING

Drycleaning solvent is flammable and will not be used near open flame. Use only in well-ventilated places. Keep fire extinguisher nearby when using drycleaning solvent. Failure to do so may result in injury to personnel.

1. Clean bearings (7) and (22), driveshaft (14), and driveshaft housing (3) with drycleaning solvent.
2. Inspect bearings (7) and (22) (TM 9-214).
3. Inspect driveshaft (14) for nicks, burrs, and broken splines. Replace driveshaft (14) if damaged.
4. Inspect driveshaft housing (3) for cracks, breaks, and scored bearing surfaces. Replace driveshaft housing (3) if damaged.

13-23. REAR WINCH DRIVESHAFT HOUSING MAINTENANCE (Contd)

d. Assembly

1. Install lubrication fitting (15) on driveshaft housing (3).
2. Install spacers (9) and (19) on covers (12) and (20).
3. Install driveshaft (14) into driveshaft housing (3) with two bearings (7) and (22), new oil seals (13) and (21), new gaskets (8) and (16), covers (12) and (20), four new lockwashers (11) and (17), and screws (10) and (18).

e. Installation

1. Position rear winch driveshaft housing (3) cm yoke (4).
2. Install spacers (5) and rear winch driveshaft housing (3) on mounting bracket (6) with four screws (2) and new locknuts (1). Tighten locknuts (1) 44-61 lb-ft (60-83 N•m).

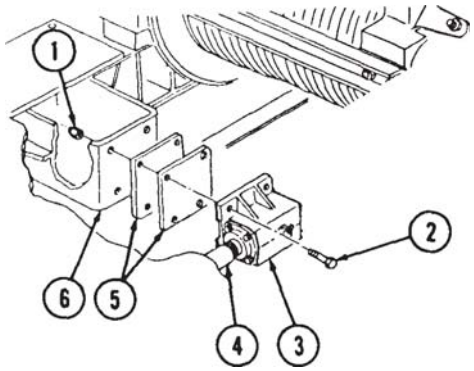

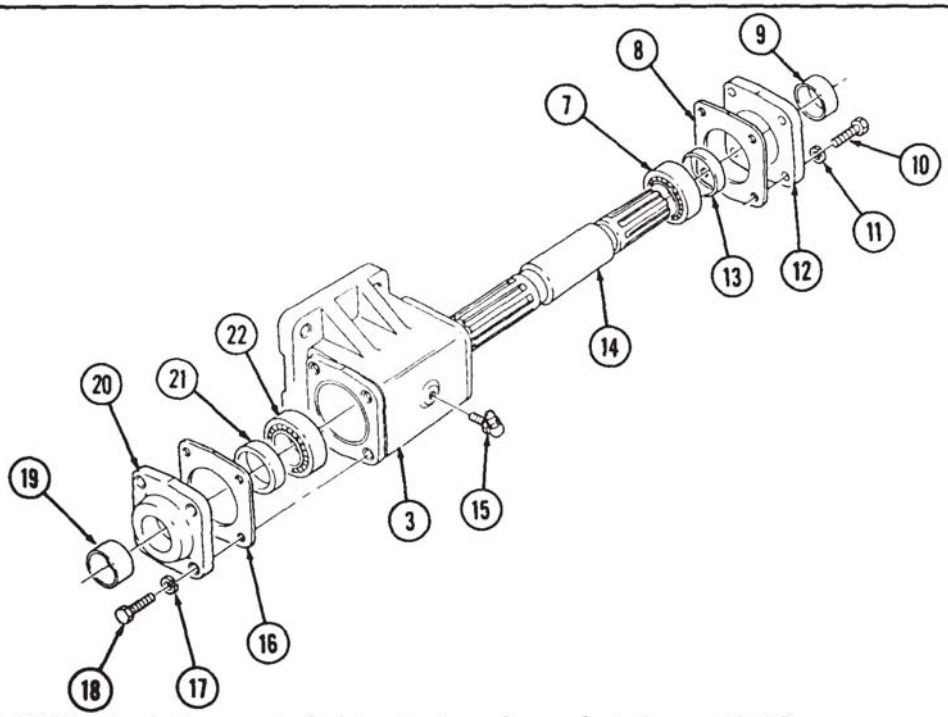

FOLLOW-ON TASK: Install rear winch drivechain and sprockets (para. 13-17).

13-24. REAR WINCH CABLE TENSIONER REPLACEMENT

THIS TASK COVERS:

a. Removal **b. Installation**

INITIAL SETUP

APPLICABLE MODELS
M816, M821

MATERIALS/PARTS
Four cotter pins
Eight lockwashers
Four locknuts

PERSONNEL REQUIRED
Two

REFERENCES (TM)
TM 9-2320-260-10
TM 9-2320-260-20P

EQUIPMENT CONDITION
- Parking brake set (TM 9-2320-260-10).
- Rear winch removed (para. 13-15).

a. Removal

1. Remove two cotter pins (8) and (10) from retaining pins (7) and (9). Discard cotter pins (8) and (10).
2. Remove retaining pins (7) and (9) and lever (5) from lever bracket (6) and tensioner shaft (20).
3. Remove four locknuts (3), washers (2) and (21), and screws (22) from lever bracket (6) and winch (1). Discard locknuts (3)
4. Remove four screws (13), lockwashers (14), and tensioner (11) from winch (l). Discard lockwashers (14).
5. Remove two nuts (17), lockwashers (16), screws (15), and bracket (12) from tensioner (11), Discard lockwashers (16).
6. Remove two nuts (18), lockwashers (19), screws (4), and lever bracket (6) from tensioner (11). Discard lockwashers (19).

b. Installation

1. Install lever bracket (6) on tensioner (11) with two screws (4), new lockwashers (19), and nuts (18).
2. Install bracket (12) on tensioner (11) with two screws (15), new lockwashers (16), and nuts (17).
3. Install bracket (12) on winch (1) with four new lockwashers (14) and screws (13).
4. Install lever bracket (6) on winch (1) with four screws (22), washers (21) and (2), and new locknuts (3).
5. Install lever (5) on lever bracket (6) and tensioner shaft (20) with retaining pins (7) and (9) and two new cotter pins (8) and (10).
6. Install lever (5) on lever bracket (6) and tensioner shaft with two new cotter pins (8) and (10).

13-24. REAR WINCH CABLE TENSIONER REPLACEMENT (Contd)

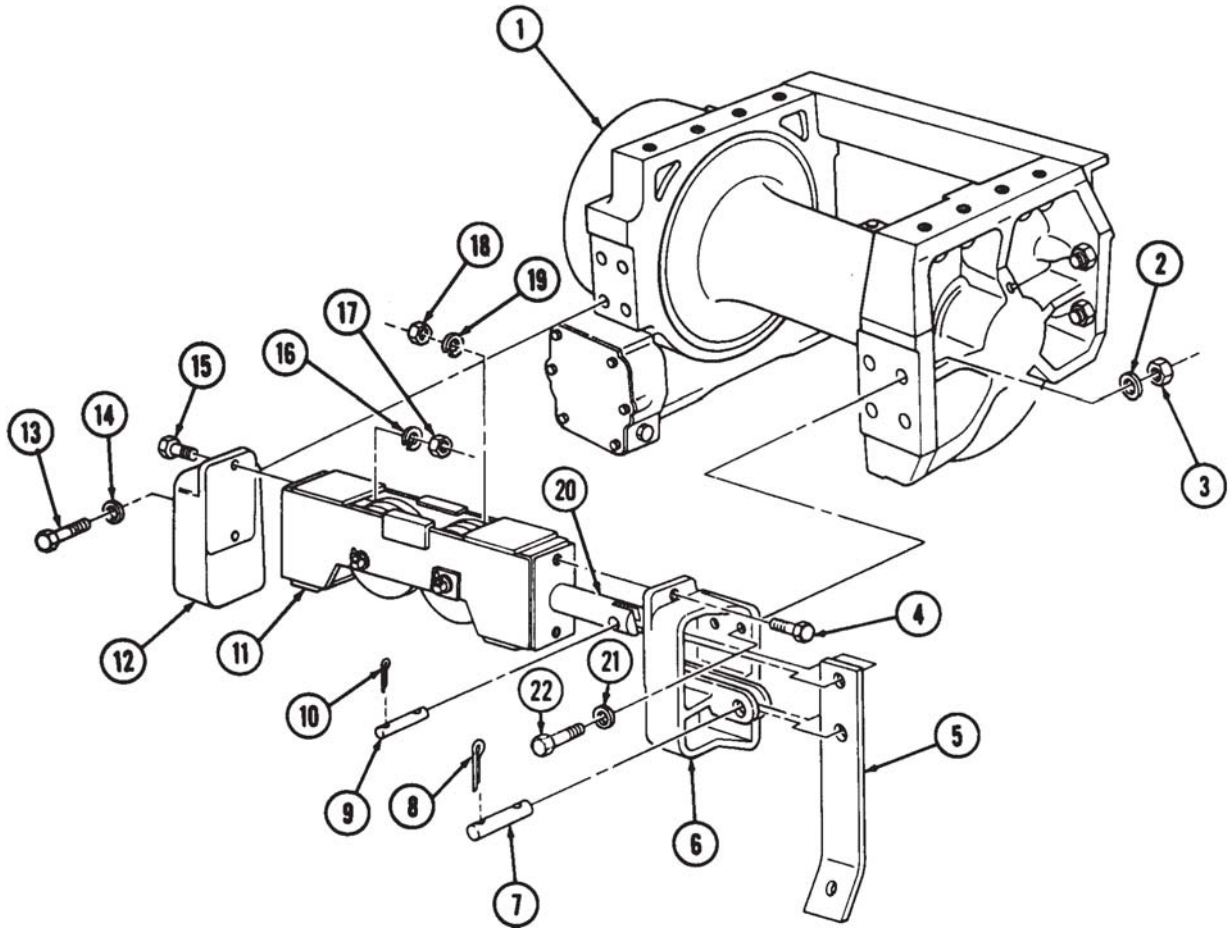

FOLLOW-ON TASK: Install rear winch (para. 13-15).

13-25. DUMP HOIST SAFETY LATCH MAINTENANCE

THIS TASK COVERS:

a. Removal
b. Disassembly
c. Cleaning and Inspection
d. Assembly
e. Installation

INITIAL SETUP

APPLICABLE MODELS

M817

MATERIALS/PARTS

Three cotter pins
Five locknuts
Two packings
Cap and plug set (Appendix C, Item 9)
Rags (Appendix C, Item 22)
Drycleaning solvent (Appendix C, Item 29)
Antiseize tape (Appendix C, Item 30)

REFERENCES (TM)

LO 9-2320-260-12
TM 9-2320-260-10
TM 9-2320-260-20P

EQUIPMENT CONDITION

- Parking brake set (TM 9-2320-260-10).
- Dump body raised and safety braces in place (TM 9-2320-260-10).
- Hydraulic reservoir drained (LO 9-2320-260-12).

GENERAL SAFETY INSTRUCTIONS

- Ensure safety braces are positioned before working under raised dump body.
- Eye protection is required when using a wire brush.
- Keep fire extinguisher nearby when using drycleaning solvent.

WARNING

Never work under raised dump body until safety braces are properly positioned. Injury to personnel may result if dump body suddenly lowers.

CAUTION

Cap or plug all openings immediately after disconnecting lines and hoses to prevent contamination. Remove caps or plugs prior to installation. Failure to do so may result in damage to equipment.

NOTE

- Tag hoses for installation.
- Have drainage container ready to catch hydraulic oil,

a. Removal

1. Disconnect two hydraulic hoses (1) from safety latch cylinder (10).
2. Remove two packings (2) from safety latch cylinder (10). Discard packings (2).
3. Remove four locknuts (7), washers (8), screws (3), locknut (6), screw (4), and safety latch assembly (9) from subframe (5). Discard locknuts (7) and (6).

b. Disassembly

1. Remove cotter pin (23) and washer (22) from pin (13). Discard cotter pin (23).
2. Slowly release spring (12) and remove pin (13) and spring (12) from mounting bracket (14) and safety hook (11).
3. Remove cotter pin (19), pin (16), and two washers (20) from safety latch cylinder (10) and safety hook (11). Discard cotter pin (19).
4. Remove safety hook (11) from safety latch cylinder (10) and mounting bracket (14).
5. Remove two lubrication fittings (21) from safety hook (11).
6. Remove cotter pin (18), pin (17), four washers (15), and safety latch cylinder (10) from mounting bracket (14). Discard cotter pin (18).

13-25. DUMP HOIST SAFETY LATCH MAINTENANCE (Contd)

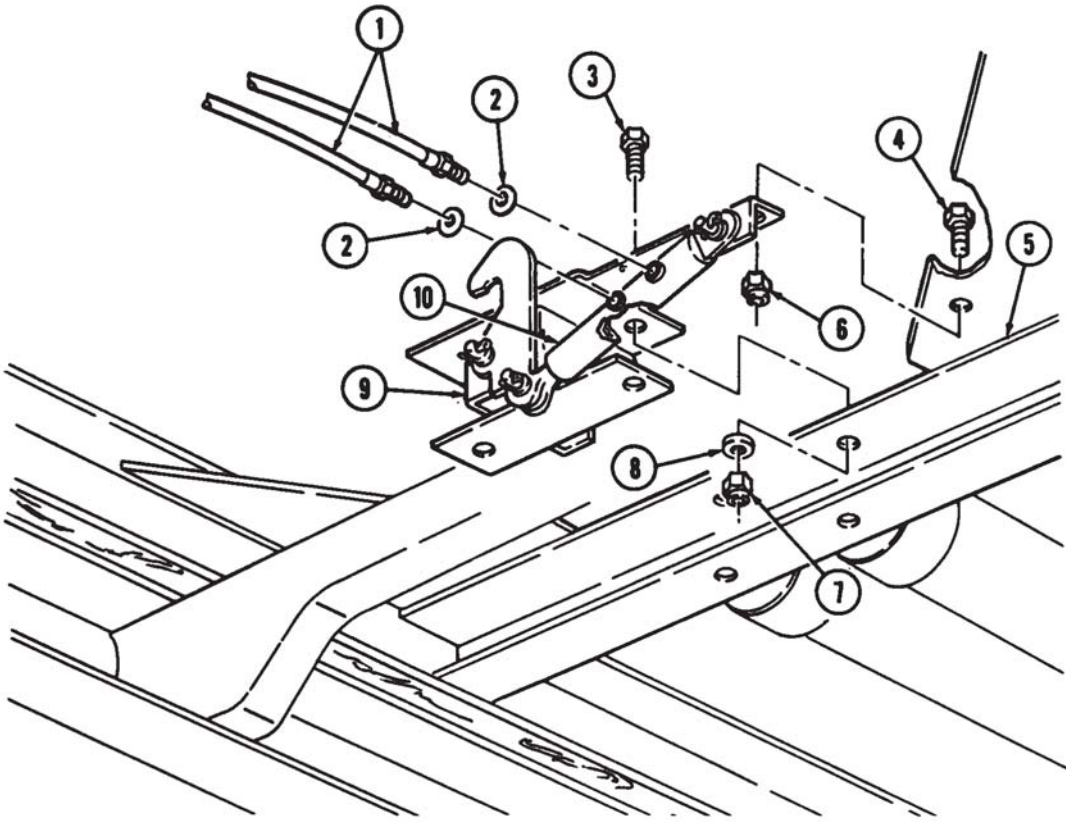

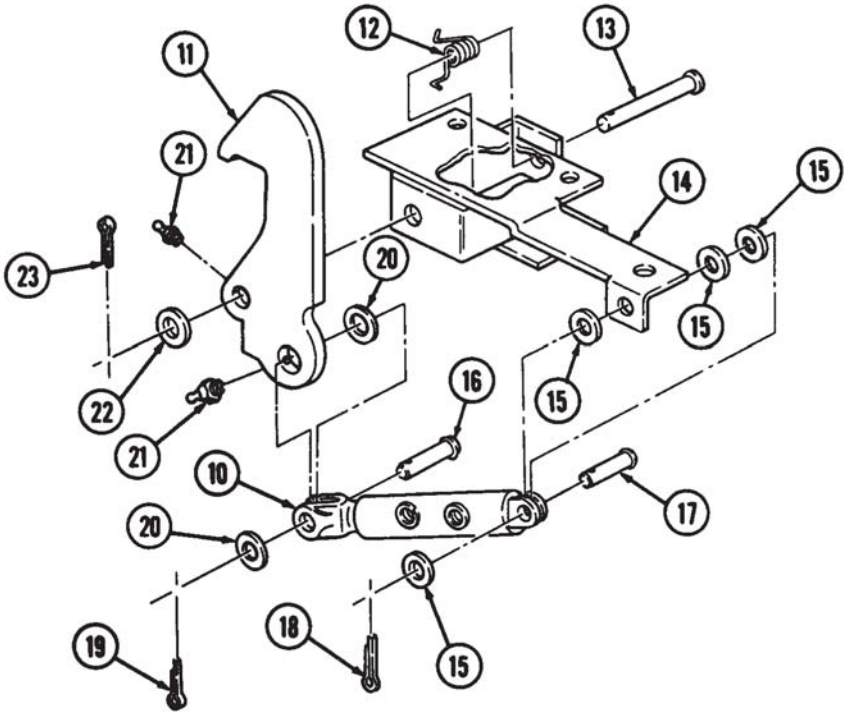

13-25. DUMP HOIST SAFETY LATCH MAINTENANCE (Contd)

c. Cleaning and Inspection

WARNING

Eye protection is required when using a wire brush for cleaning. Failure to do so may result in injury to personnel.

1. Clean all parts with a wire brush to remove dirt, rust, and corrosion.

WARNING

Drycleaning solvent is flammable and will not be used near open flame. Use only in well-ventilated places. Keep fire extinguisher nearby when using drycleaning solvent. Failure to do so may result in injury to personnel.

2. Clean all parts with drycleaning solvent. Dry each part with a clean rag.
3. Inspect parts for cracks and breaks. Replace parts if cracked or broken.
4. Inspect parts for wear and damage. Replace parts if worn or damaged.

d. Assembly

1. Install safety latch cylinder (8) on mounting bracket (4) with four washers (5), pin (7), and new cotter pin (9).
2. Install two lubrication fittings (12) on safety hook (1).
3. Install safety hook (1) on mounting bracket (4) with spring (2), pin (3), washer (13), and new cotter pin (14).
4. Install safety hook (1) on safety latch cylinder (8) with washer (11), pin (6), washer (11), and new cotter pin (10).

e. Installation

1. Install mounting bracket (4) and safety latch assembly (23) on subframe (19) with four screws (17), screw (18), four washers (22), new locknuts (21), and new locknut (20).
2. Install two new packings (16) in safety latch cylinder (8).
3. Connect two hydraulic hoses (15) to safety latch cylinder (8).

13-25. DUMP HOIST SAFETY LATCH MAINTENANCE (Contd)

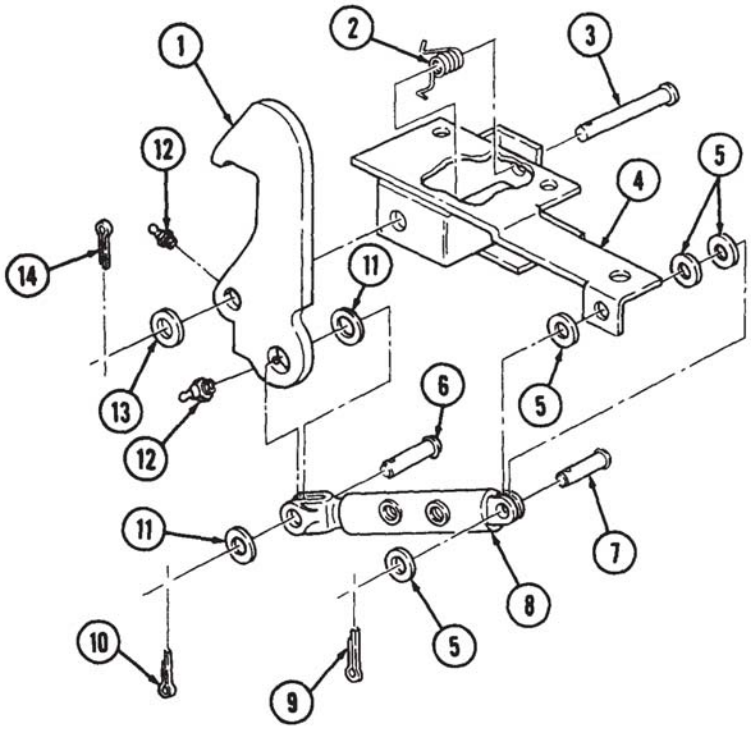

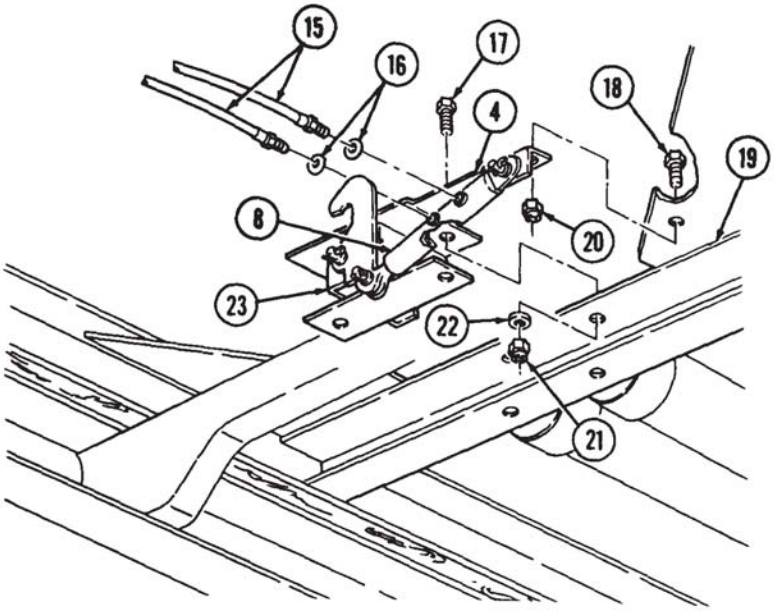

FOLLOW-ON TASKS:
- Fill hydraulic reservoir to proper oil level (LO 9-2320-260-12).
- Remove safety braces and lower dump body (TM 9-2320-260-10).
- operate dump body through full range (TM 9-2320-260-10).
- Check for leaks and proper operation (TM 9-2320-260-10).

13-26. DUMP HOIST CONTROL BOX MAINTENANCE

THIS TASK COVERS:

a. Removal
b. Disassembly
c. Cleaning and Inspection
d. Assembly
e. Installation

INITIAL SETUP

APPLICABLE MODELS
M817

MATERIALS/PARTS
Two cotter pins
Six lockwashers
Four woodruff keys
Gasket
Rags (Appendix C, Item 22)
Drycleaning solvent (Appendix C, Item 29)

REFERENCES (TM)
TM 9-2320-260-10
TM 9-2320-260-20P

EQUIPMENT CONDITION
Parking brake set (TM 9-2320-260-10).

GENERAL SAFETY INSTRUCTIONS
- Eye protection is required when using a wire brush.
- Keep fire extinguisher nearby when using drycleaning solvent.

a. Removal

1. Remove two cotter pins (18), straight pins (16), and clevises (17) from levers (2). Discard cotter pins (18).
2. Remove nut (14), lockwasher (13), and screw (11) from two control box levers (12). Discard lockwasher (13).
3. Remove two control box levers (12) from control valve trunnion (8) and control box (15).
4. Remove two screws (1), lockwashers (3), nuts (4), and levers (2) from control box (15). Discard lockwashers (3).
5. Remove four woodruff keys (9) from shafts (10). Discard woodruff keys (9).
6. Remove three screws (6), lockwashers (7), and control box (15) from subframe (5). Discard lockwashers (7).

13-26. DUMP HOIST CONTROL BOX MAINTENANCE (Contd)

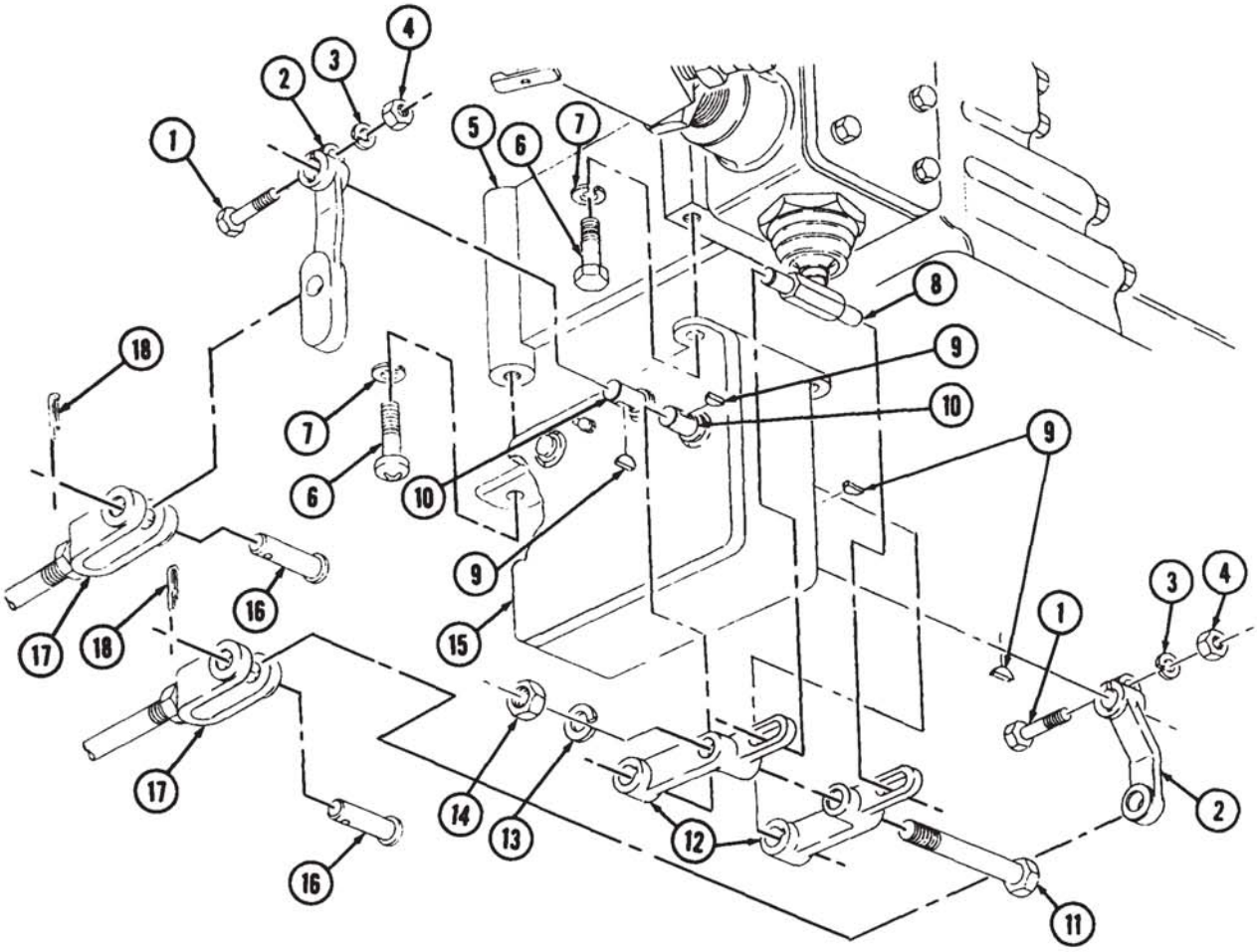

13-26. DUMP HOIST CONTROL BOX MAINTENANCE (Contd)

b. Disassembly

1. Remove four screw-assembled washers (7) and lubrication fitting (8) from cover (1).
2. Remove cover (1), two cams (2), lever (6), and gasket (4) from housing (5). Discard gasket (4).
3. Remove two rollers (3) from lever (6).

c. Cleaning and Inspection

WARNING

Eye protection is required when using a wire brush for cleaning. Failure to do so may result in injury to personnel.

1. Clean all parts with a wire brush to remove dirt, rust, and corrosion.

WARNING

Drycleaning solvent is flammable and will not be used near open flame. Use only in well-ventilated places. Keep fire extinguisher nearby when using drycleaning solvent. Failure to do so may result in injury to personnel.

2. Clean all parts with drycleaning solvent. Dry each part with a clean rag.
3. Inspect parts for cracks and breaks. Replace parts if cracked or broken.
4. Inspect parts for wear and damage. Replace parts if worn or damaged.

d. Assembly

1. Install two rollers (3) on lever (6).
2. Position new gasket (4), lever (6), two cams (2), and cover (1) on housing (5).
3. Secure cover (1) on housing (5) with four screw-assembled washers (7).
4. Install lubrication fitting (8) on cover (1).

13-26. DUMP HOIST CONTROL BOX MAINTENANCE (Contd)

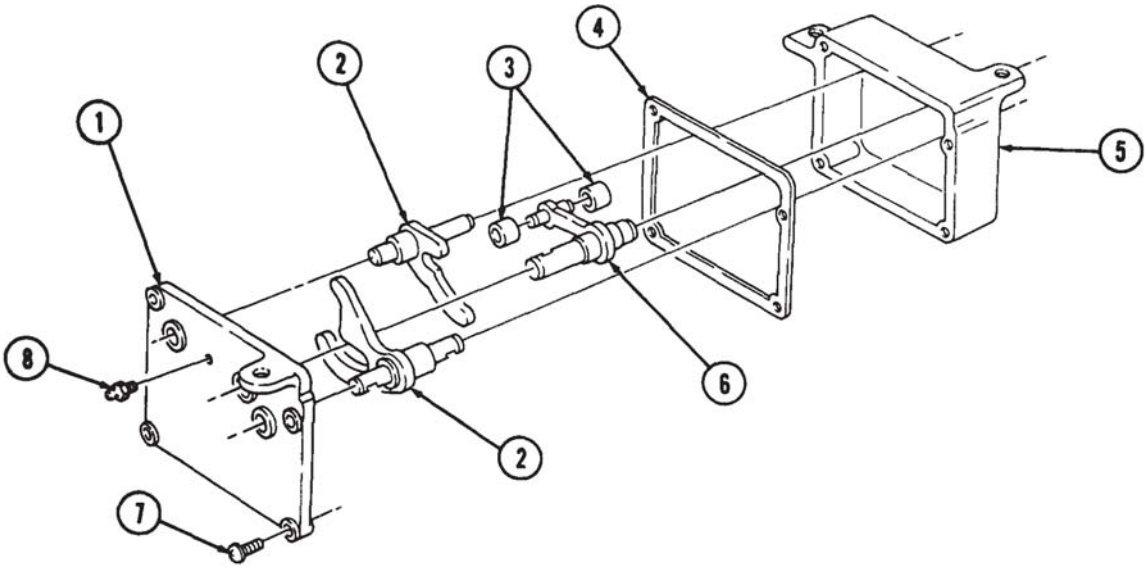

13-26. DUMP HOIST CONTROL BOX MAINTENANCE (Contd)

e. Installation

1. Install control box (15) on subframe (5) with three new lockwashers (7) and screws (6).
2. Install four new woodruff keys (9) on shafts (10).
3. Install two levers (2) on control box (15) and secure with two screws (1), new lockwashers (3), and nuts (4).
4. Position two control box levers (12) on control valve trunnion (8) and control box (15).
5. Install screw (11) through two control box levers (12) and secure with new lockwasher (13) and nut (14).
6. Install two clevises (17) on levers (2) with two straight pins (16) and new cotter pins (18).

13-26 DUMP HOIST CONTROL BOX MAINTENANCE (Contd)

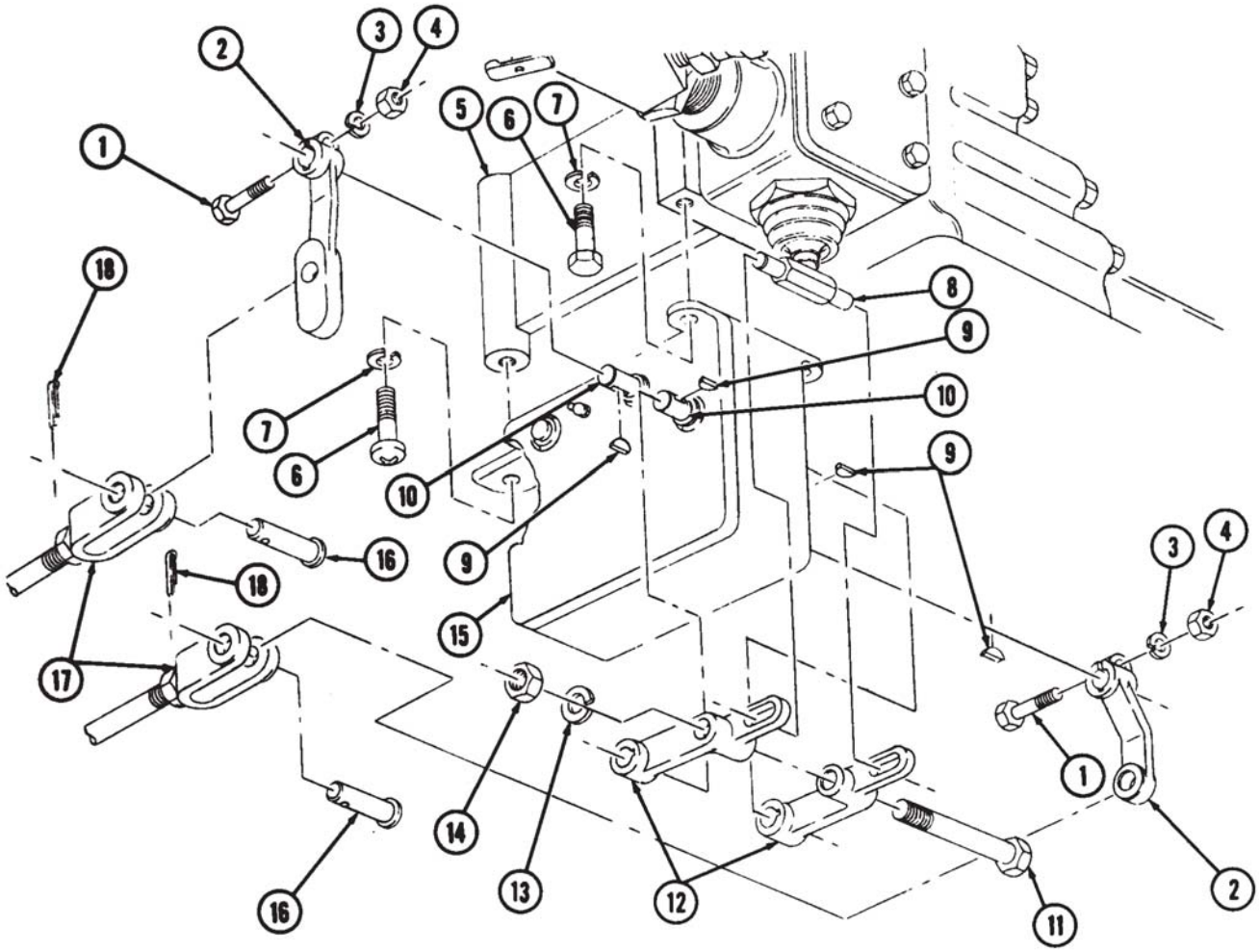

FOLLOW-ON TASK: Operate dump body through full range (TM 9-2320-260-10).

13-27. DUMP CONTROLS REPLACEMENT

THIS TASK COVERS:

a. Removal **b. Installation**

INITIAL SETUP

APPLICABLE MODELS
M817

MATERIALS/PARTS
Cotter pin
Woodruff key
Six locknuts

REFERENCES (TM)
TM 9-2320-260-10
TM 9-2320-260-20P

EQUIPMENT CONDITION
- Parking brake set (TM 9-2320-260-10).
- Driver's seat removed (para. 11-32).

a. Removal

1. Remove cotter pin (11), clevis pin (9), and control rod (10) from lever (15). Discard cotter pin (11),
2. Bend four tabs (20) and remove boot (12) from floor (8).

NOTE

Assistant will help with step 3.

3. Remove four locknuts (13), screws (14), and two brackets (7) from floor (8). Discard locknuts (13).
4. Remove locknut (17), screw (16), lever (15), and woodruff key (18) from shaft (l). Discard locknut (17) and woodruff key (18).
5. Remove two brackets (7) from shaft (1).
6. Remove locknut (6), washer (5), spring (4), and lock (2) from lever (3). Discard locknut (6).
7. Remove two grease fittings (19) from brackets (7).

b. Installation

1. Install two grease fittings (19) on brackets (7).
2. Install lock (2) on lever (3) with spring (4), washer (5), and new locknut (6).
3. Position two brackets (7) on shaft (1).
4. Install new woodruff key (18) on shaft (1).
5. Install lever (15) on shaft (1) with screw (16) and new locknut (17).

NOTE

Assistant will help with step 6.

6. Install two brackets (7) on floor (8) with four screws (14) and new locknuts (13).
7. Install boot (12) through opening in floor (8) and bend tabs (20) to secure in place.
8. Install control rod (10) on lever (15) with clevis pin (9) and new cotter pin (11).

13-27. DUMP CONTROLS REPLACEMENT (Contd)

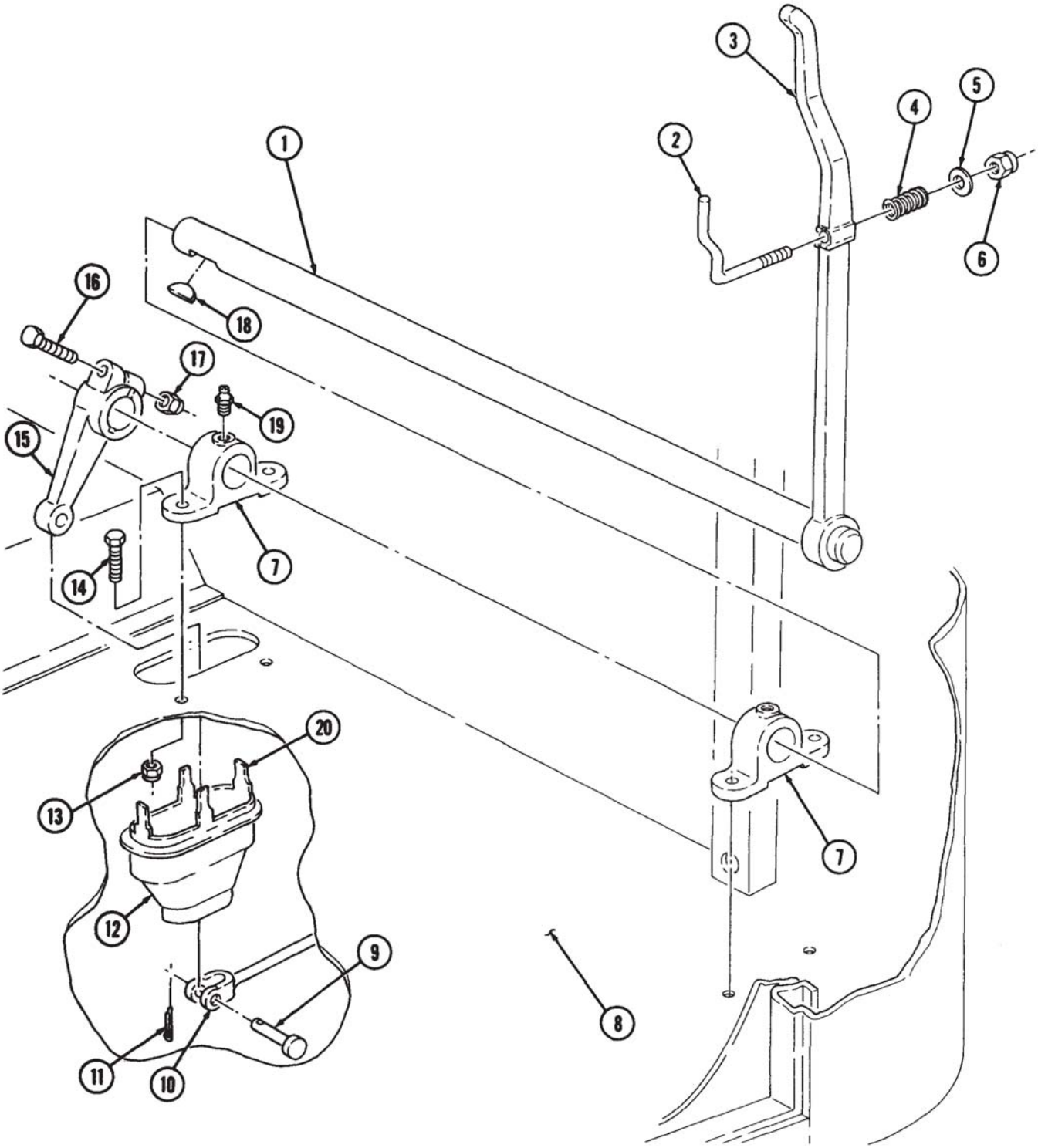

FOLLOW-ON TASKS: • Install driver's seat (para. 11-32).
• Operate dump body through full range (TM 9-2320-260-10).

13-28. DUMP CONTROL LINKAGE MAINTENANCE

THIS TASK COVERS:

a Removal
b. Inspection
c. Installation

INITIAL SETUP

APPLICABLE MODELS
M817

MATERIALS/PARTS
Eight locknuts
Three cotter pins

REFERENCES (TM)
TM 9-2320-260-10
TM 9-2320-260-20P

EQUIPMENT CONDITION
Parking brake set (TM 9-2320-260-10).

a. Removal

1. Remove two cotter pins (5), pins (3), and rod (2) from lever (14) and power takeoff (4). Discard cotter pins (5).
2. Remove cotter pin (7), pin (9), and rod (8) from lever (11). Discard cotter pin (7).
3. Remove eight locknuts (13), screws (6), two brackets (1), and shaft (12) with levers (11) and (14) from crossmember (15). Discard locknuts (13).
4. Remove two pins (10), levers (11) and (14), and brackets (1) from shaft (12).

b. Inspection

Inspect shaft (12), rod (2), levers (11) and (14), and brackets (1) for cracks, breaks, and twists. Replace if damaged.

c. Installation

1. Install two brackets (1) on shaft (12).
2. Install levers (11) and (14) on shaft (12) with two pins (10).
3. Install two brackets (1) and shaft (12) with levers (11) and (14) on crossmember (15) with eight screws (6) and new locknuts (13).
4. Install rod (8) on lever (11) with pin (9) and new cotter pin (7).
5. Install rod (2) on lever (14) and power takeoff (4) with two pins (3) and new cotter pins (5).

13-28. DUMP CONTROL LINKAGE MAINTENANCE (Contd)

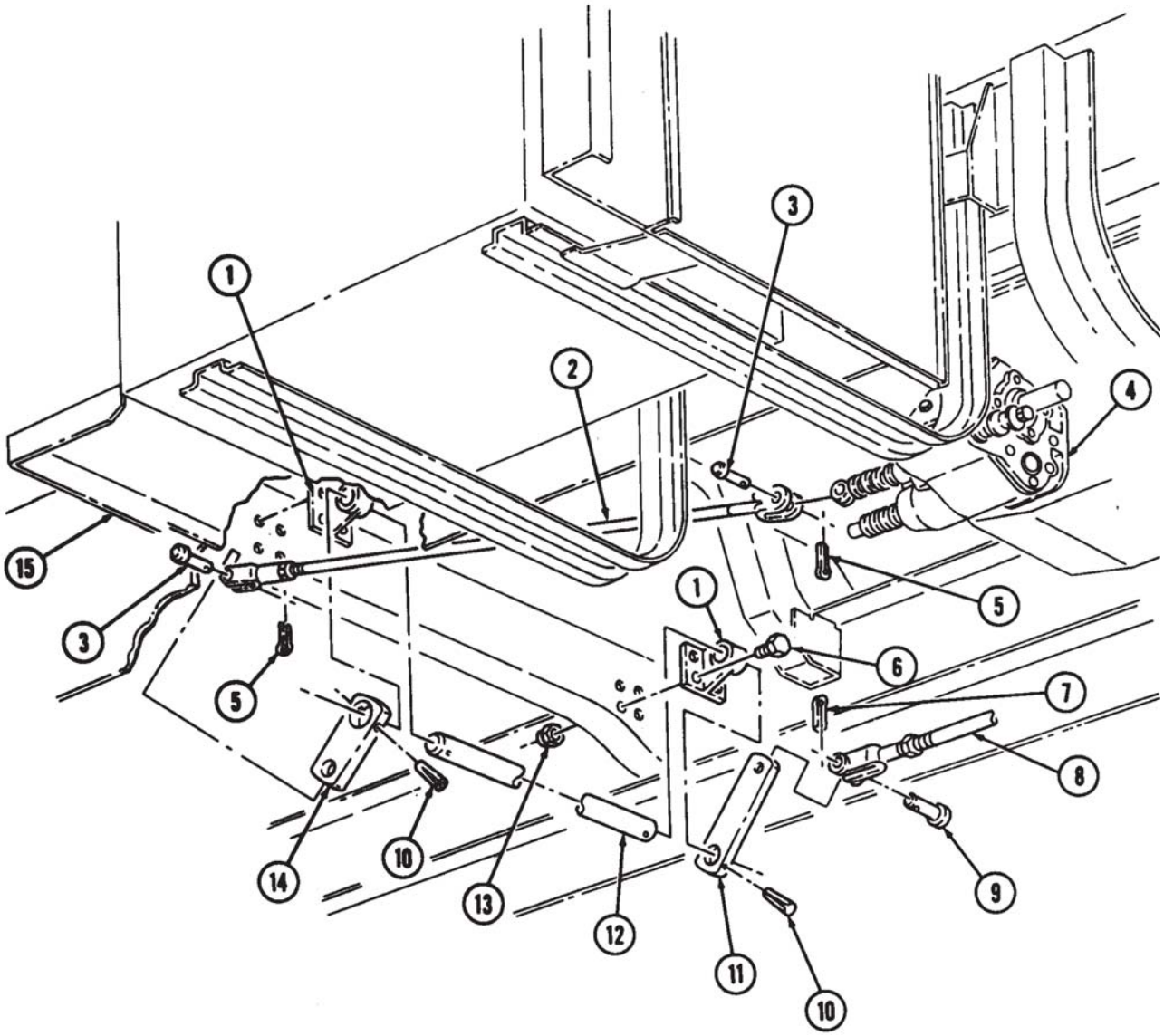

13-29. DUMP HOIST PUMP PROPELLER SHAFT MAINTENANCE

THIS TASK COVERS:

a. Removal
b. Cleaning and Inspection
c. Installation

INITIAL SETUP

APPLICABLE MODELS
M817

MATERIALS/PARTS
Three woodruff keys
Rags (Appendix C; Item 22)
Drycleaning solvent (Appendix C, Item 29)

REFERENCES (TM)
TM 9-2320-260-10
TM 9-2320-260-20P

EQUIPMENT CONDITION
Parking brake set (TM 9-2320-260-10).

GENERAL SAFETY INSTRUCTIONS
- Eye protection is required when using a wire brush.
- Keep fire extinguisher nearby when using drycleaning solvent.

a. Removal

1. Loosen two setscrews (4) on yokes (5) and (9).
2. Slide propeller shaft (6) toward power takeoff (10) and remove yoke (5) and woodruff key (2) from hydraulic pump (3). Discard woodruff key (2).
3. Remove propeller shaft (6) and woodruff key (1) from power takeoff (10). Discard woodruff key (1).
4. Remove yoke (5) from propeller shaft (6).
5. Loosen setscrew (8) and remove yoke (9) and woodruff key (7) from propeller shaft (6). Discard woodruff key (7).

b. Cleaning and Inspection

WARNING

Eye protection is required when using a wire brush for cleaning. Failure to do so may result in injury to personnel.

1. Clean all parts with a wire brush to remove dirt, rust, and corrosion.

WARNING

Drycleaning solvent is flammable and will not be used near open flame. Use only in well-ventilated places. Keep fire extinguisher nearby when using drycleaning solvent. Failure to do so may result in injury to personnel.

2. Clean all parts with drycleaning solvent. Dry each part with a clean rag.
3. Inspect parts for cracks and breaks. Replace parts if cracked or broken.
4. Inspect parts for wear and damage. Replace parts if worn or damaged.

c. Installation

1. Install new woodruff key (7) and yoke (9) on propeller shaft (6) and tighten setscrew (8).
2. Install yoke (5) on propeller shaft (6).
3. Install new woodruff key (1) on power takeoff (10).
4. Install yoke (9) and propeller shaft (6) on power takeoff (10).
5. Install new woodruff key (2), yoke (5), and propeller shaft (6) on hydraulic pump (3).
6. Tighten two setscrews (4) on yokes (5) and (9).

13-29. DUMP HOIST PUMP PROPELLER SHAFT MAINTENANCE (Contd)

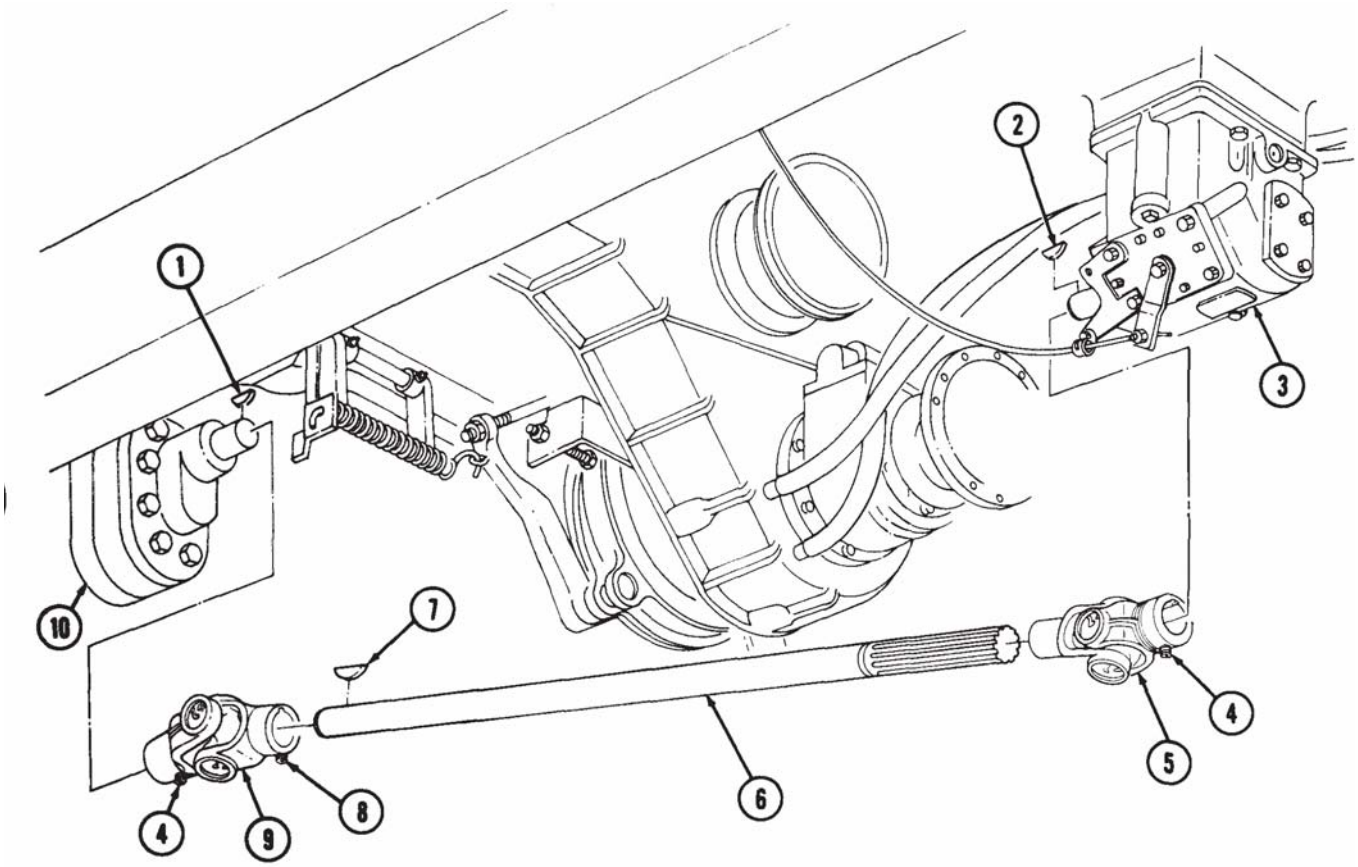

13-30. WRECKER HYDRAULIC OIL FILTER ELEMENT REPLACEMENT

THIS TASK COVERS:

a. Removal

b. Installation

INITIAL SETUP

APPLICABLE MODELS
M816

MATERIALS/PARTS
O-ring

REFERENCES (TM)
LO 9-2320-260-12
TM 9-2320-260-10
TM 9-2320-260-20P

EQUIPMENT CONDITION
- Parking brake set (TM 9-2320-260-10).
- Hydraulic oil reservoir drained (LO 9-2320-260-12).

a. Removal

NOTE

Have drainage container ready to catch hydraulic oil.

1. Remove four screws (9), rear cover (8), and filter element (1) from hydraulic oil filter housing (4).
2. Remove filter element (1) and O-ring (7) from rear cover (8). Discard O-ring (7).
3. Remove seal ring (3) from front head (2).
4. Remove three screws (6), rear head (5), and filter element (1) from front head (2).

b. Installation

1. Install filter element (1) on front head (2) with rear head (5) and three screws (6).
2. Install seal ring (3) on front head (2).
3. Position new O-ring (7) and filter element (1) on rear cover (8).
4. Install filter element (1) and rear cover (8) on hydraulic oil filter housing (4) with four screws (9).

13-30. WRECKER HYDRAULIC OIL FILTER ELEMENT REPLACEMENT (Contd)

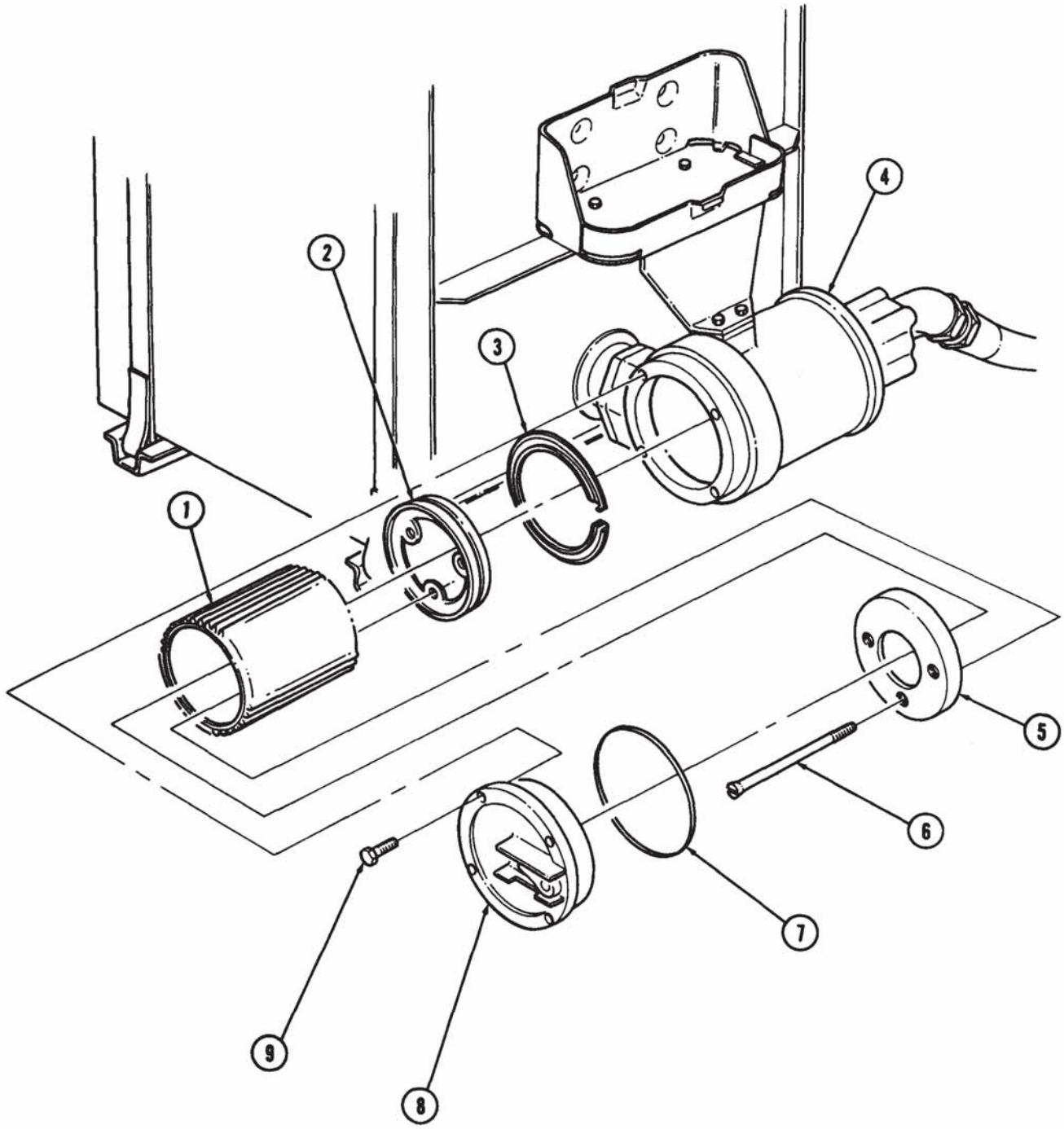

FOLLOW-ON TASK: Fill hydraulic oil reservoir (LO 9-2320-260-12).

13-31. WRECKER HYDRAULIC OIL RESERVOIR REPLACEMENT

THIS TASK COVERS:

a. Removal **b. Installation**

INITIAL SETUP

APPLICABLE MODELS
M816

MATERIALS/PARTS
Nine locknuts
Six lockwashers
Gasket

REFERENCES (TM)
LO 9-2320-260-12
TM 9-2320-260-10
TM 9-2320-260-20P

EQUIPMENT CONDITION
- Parking brake set (TM 9-2320-260-10).
- Hydraulic oil reservoir drained (LO 9-2320-260-12).
- Water can removed (TM 9-2320-260-10).

a. Removal

1. Remove hydraulic line (2) from oil reservoir (1).
2. Remove seven locknuts (14) and screws (4) from upper water can bracket (15) and oil reservoir (1). Discard locknuts (14).
3. Remove two screws (5), lockwashers (6), washers (7), upper water can bracket (15), and lower water can bracket (8) from hydraulic filter (9). Discard lockwashers (6).
4. Remove four screws (12), lockwashers (11), hydraulic filter (9), and gasket (10) from oil reservoir (1). Discard lockwashers (11) and gasket (10).
5. Remove two locknuts (3) and screws (17) from straps (16). Discard locknuts (3).
6. Remove oil reservoir (1) from two supports (13).

b. Installation

1. Install oil reservoir (1) on two supports (13) with straps (16), screws (17), and new locknuts (3).
2. Install new gasket (10) and hydraulic filter (9) on oil reservoir (1) with four new lockwashers (11) and screws (12).
3. Install upper water can bracket (15) and lower water can bracket (8) on hydraulic filter (9) with two washers (7), new lockwashers (6), and screws (5).
4. Install upper water can bracket (15) on oil reservoir (1) with seven screws (4) and new locknuts (14).
5. Install hydraulic line (2) on oil reservoir (1).

13-31. WRECKER HYDRAULIC OIL RESERVOIR REPLACEMENT (Contd)

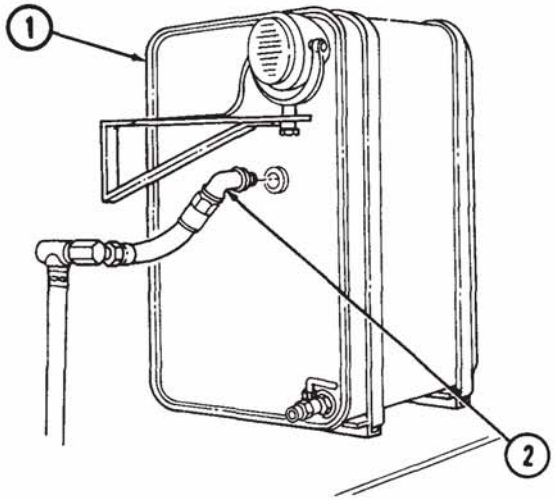

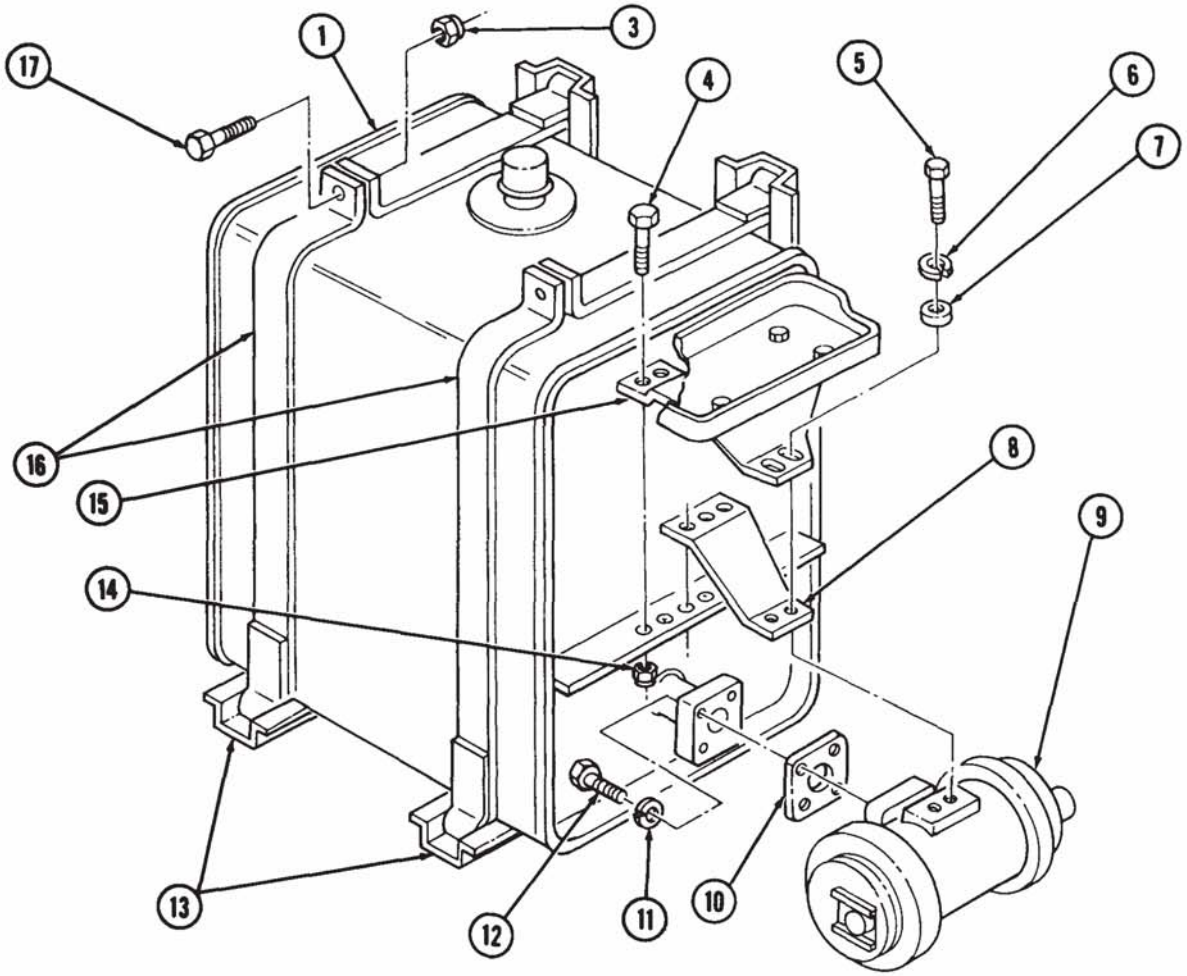

FOLLOW-ON TASKS: • Fill hydraulic oil reservoir (LO 9-2320-260-12).
• Install water can (TM 9-2320-260-10).

13-32. WRECKER RESTRICTOR VALVE REPLACEMENT

THIS TASK COVERS:

a. Removal **b. Installation**

INITIAL SETUP

APPLICABLE MODELS
M816

MATERIALS/PARTS
Two locknuts
Six screw-assembled lockwashers
Cap and plug set (Appendix C, Item 9)

REFERENCES (TM)
TM 9-2320-260-10
TM 9-2320-260-20P

EQUIPMENT CONDITION
Parking brake set (TM 9-2320-260-10).

CAUTION

Cap or plug all openings immediately after disconnecting lines and hoses to prevent contamination. Remove cap or plugs prior to installation. Failure to do so may result in damage to equipment.

a. Removal

NOTE

Have drainage container ready to catch hydraulic fluid.

1. Remove six screw-assembled lockwashers (4) and cover (2) from gondola (1). Discard screw-assembled lockwashers (4).
2. Remove two locknuts (8) and clamps (7) from hoses (11) and (3). Discard locknuts (8).
3. Remove hose (3) from extension lever connection (6).
4. Remove hose (9) from extension cylinder connection (5).
5. Remove two hoses (3) and (9) and restrictor valve (10) from gondola (1).
6. Remove two hoses (3) and (9) from restrictor valve (10).

b. Installation

CAUTION

Arrow marked on restrictor valve must face extension lever. Failure to do so may cause damage to equipment.

1. Install two hoses (3) and (9) on restrictor valve (10).
2. Route two hoses (3) and (9) and restrictor valve (10) through gondola (1).
3. Install hose (9) on extension cylinder connection (5).
4. Install hose (3) on extension lever connection (6).
5. Install two clamps (7) on hoses (3) and (11) with two new locknuts (8).
6. Install cover (2) on gondola (1) with six new screw-assembled lockwashers (4).

13-32. WRECKER RESTRICTOR VALVE REPLACEMENT (Contd)

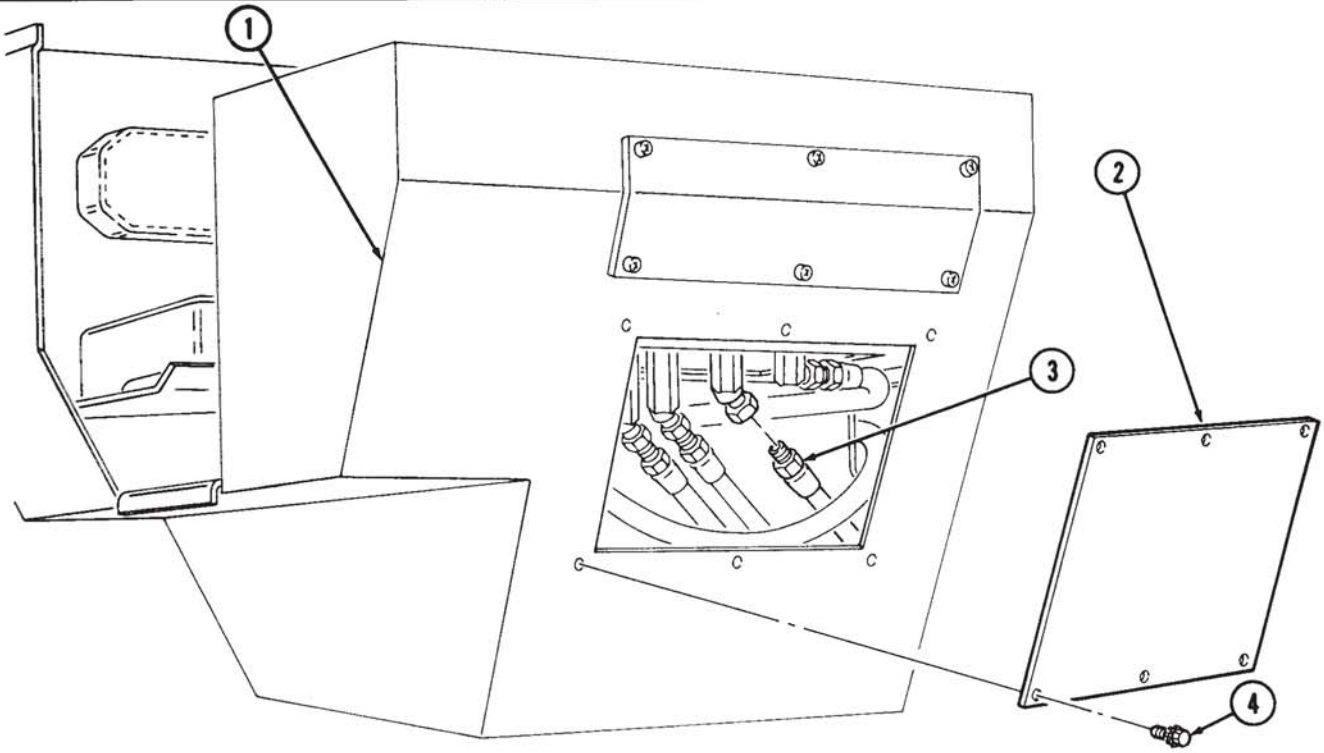

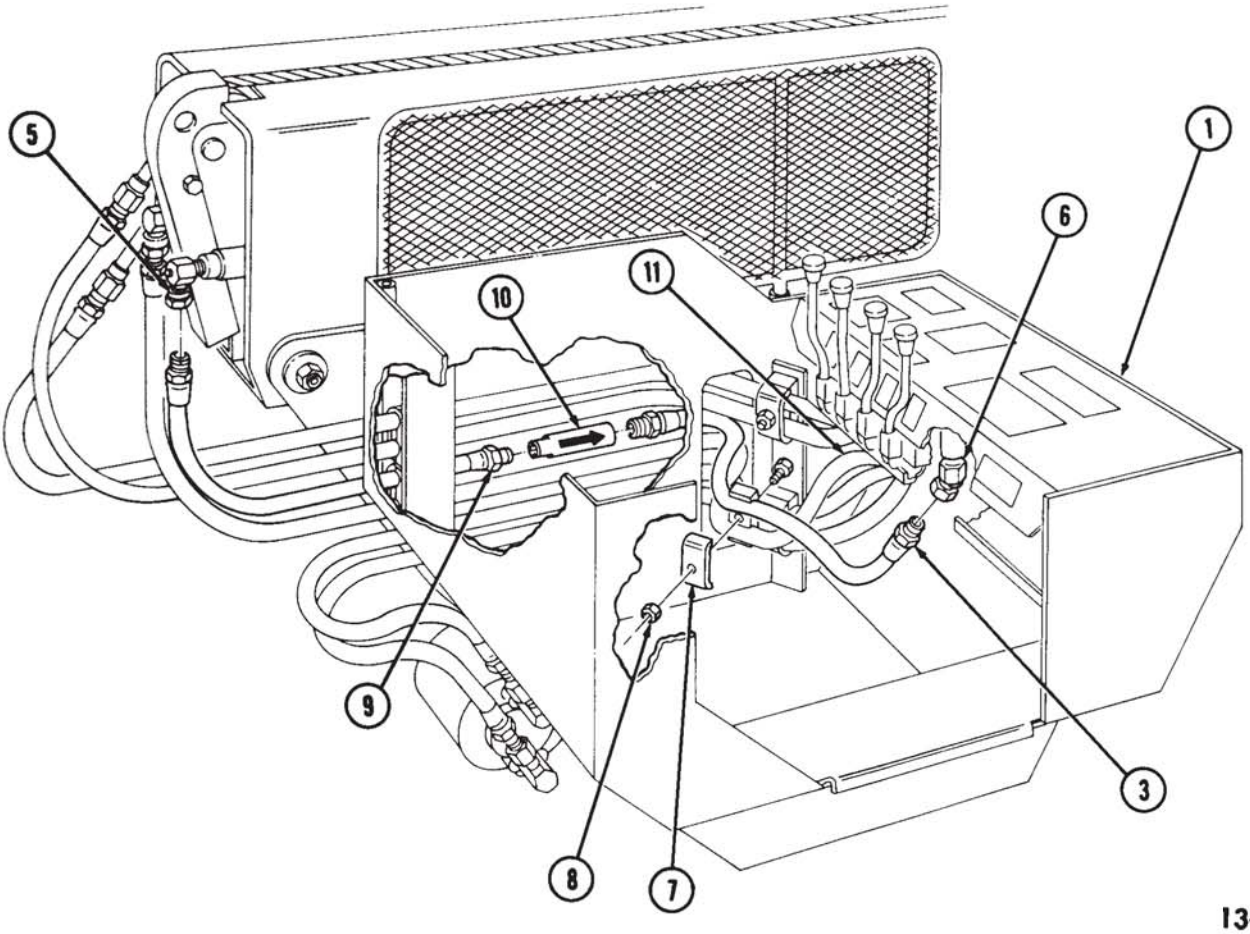

13-33. WRECKER CONTROL VALVE REPLACEMENT

THIS TASK COVERS:

a. Removal

b. Installation

INITIAL SETUP

APPLICABLE MODELS
M816

MATERIALS/PARTS
Four lockwashers
Four locknuts

REFERENCES (TM)
LO 9-2320-260-12
TM 9-2320-260-10
TM 9-2320-260-20P

EQUIPMENT CONDITION
- Parking brake set (TM 9-2320-260-10).
- Hydraulic oil reservoir drained (LO 9-2320-260-12).

GENERAL SAFETY INSTRUCTIONS
- All personnel must stand clear during lifting operations.
- Ensure lifting capacity is greater than weight of control valve.

a. Removal

1. Remove five screws (1) and control panel (2) from gondola (7).
2. Attach two chains to lifting device and control valve (4) and remove slack from chains.

NOTE

Tag all hoses for installation.

3. Disconnect nine hoses (9) from control valve (4).

WARNING

- All personnel must stand clear during lifting operations. A swinging or shifting load may cause injury to personnel.
- Ensure lifting capacity is greater than weight of control valve. Failure to do so may result in injury to personnel or damage to equipment.

4. Remove elbow fitting (3) and tube (5) from control valve (4).
5. Remove four locknuts (8), screws (6), and control valve (4) from gondola (7). Discard locknuts (8).
6. Remove eight retaining rings (16), pins (17), and four control levers (10) from control valve (4) and mounting base (11).
7. Remove four nuts (14), lockwashers (15), screws (12), two mounting brackets (13), and mounting base (11) from control valve (4). Place control valve (4) on wooden supports. Discard lockwashers (15).
8. Remove chains from lifting device and control valve (4).

b. Installation

1. Attach two chains and lifting device to control valve (4).

WARNING

- All personnel must stand clear during lifting operations. A swinging or shifting load may cause injury to personnel.
- Ensure lifting capacity is greater than weight of control valve. Failure to do so may result in injury to personnel or damage to equipment.

2. Lift control valve (4) from wooden supports and install two mounting brackets (13) and mounting base (11) on control valve (4) with four screws (12), new lockwashers (15), and nuts (14).

13-33. WRECKER CONTROL VALVE REPLACEMENT (Contd)

3. Install four control levers (10) on control valve (4) and mounting base (11) with eight pins (17) and retaining rings (16).
4. Install control valve (4) on gondola (7) with four screws (6) and new locknuts (8).
5. Remove chains from lifting device and control valve (4).
6. Install tube (5) and elbow fitting (3) on control valve (4).
7. Connect nine hoses (9) to control valve (4).
8. Install control panel (2) on gondola (7) with five screws (1).

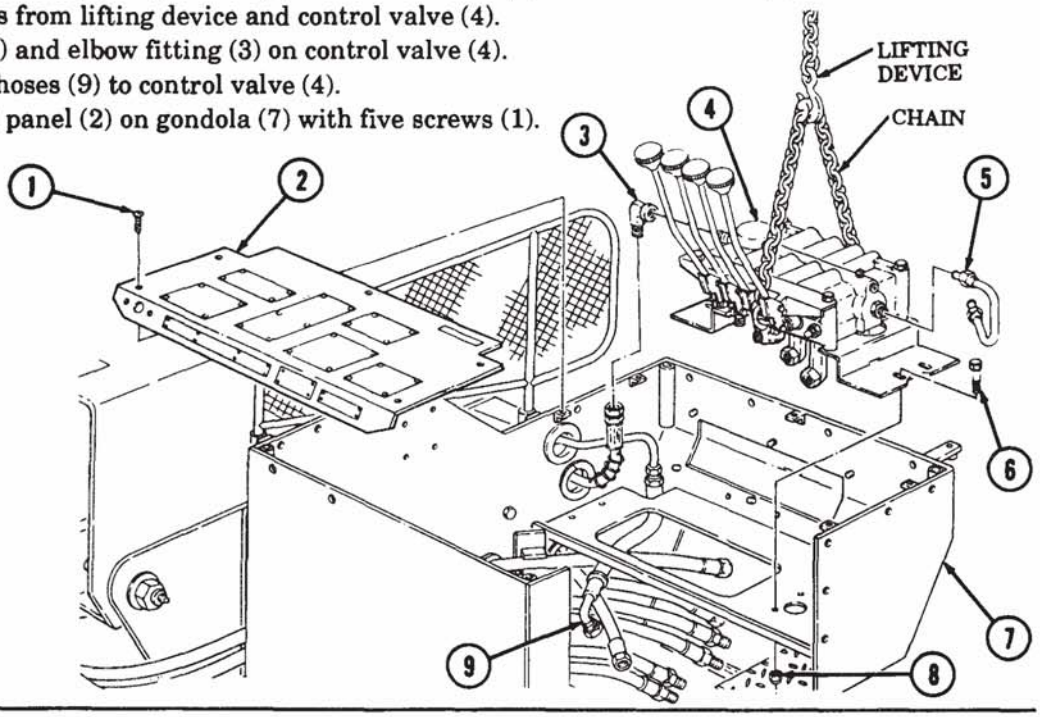

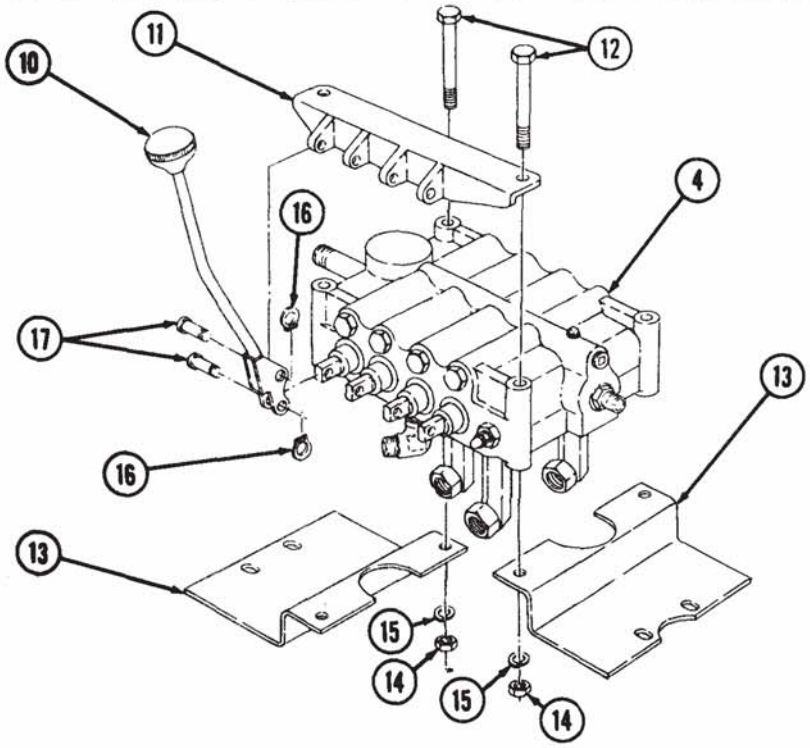

FOLLOW-ON TASK: Fill hydraulic oil reservoir (LO 9-2320-260-12).

13-34. WRECKER CONTROL VALVE HYDRAULIC HOSES REPLACEMENT

THIS TASK COVERS:

a. Removal **b. Installation**

INITIAL SETUP

APPLICABLE MODELS
M816

MATERIALS/PARTS
Two locknuts

REFERENCES (TM)
LO 9-2320-260-12
TM 9-2320-260-10
TM 9-2320-260-20P

EQUIPMENT CONDITION
- Parking brake set (TM 9-2320-260-10).
- Hydraulic oil reservoir drained (LO 9-2320-260-12).
- Restrictor valve removed (para. 13-32).

a. Removal

NOTE

- All hydraulic hoses are replaced basically the same. This procedure covers the replacement of one hydraulic hose.
- Tag and number all hose connectors with their corresponding fitting before removing the part.
- Have drainage container ready to catch oil.

1. Remove two locknuts (6) and hose clamps (5) from gondola (2). Discard locknuts (6).
2. Remove hose (4) from extension lever connection (3).
3. Remove hose (4) from extension cylinder connection (1).

NOTE

Move tags from a damaged part to a replacement part before discarding the damaged part.

4. Remove hose (4) from gondola (2).

b. Installation

1. Position hose (4) on gondola (2).

NOTE

Verify numbers marked on tags before installing hose connectors on fittings.

2. Install hose (4) on extension cylinder connection (1).
3. Install hose (4) on extension lever connection (3).
4. Install hose (4) on gondola (2) with two clamps (5) and new locknuts (6).

13-34. WRECKER CONTROL VALVE HYDRAULIC HOSES REPLACEMENT (Contd)

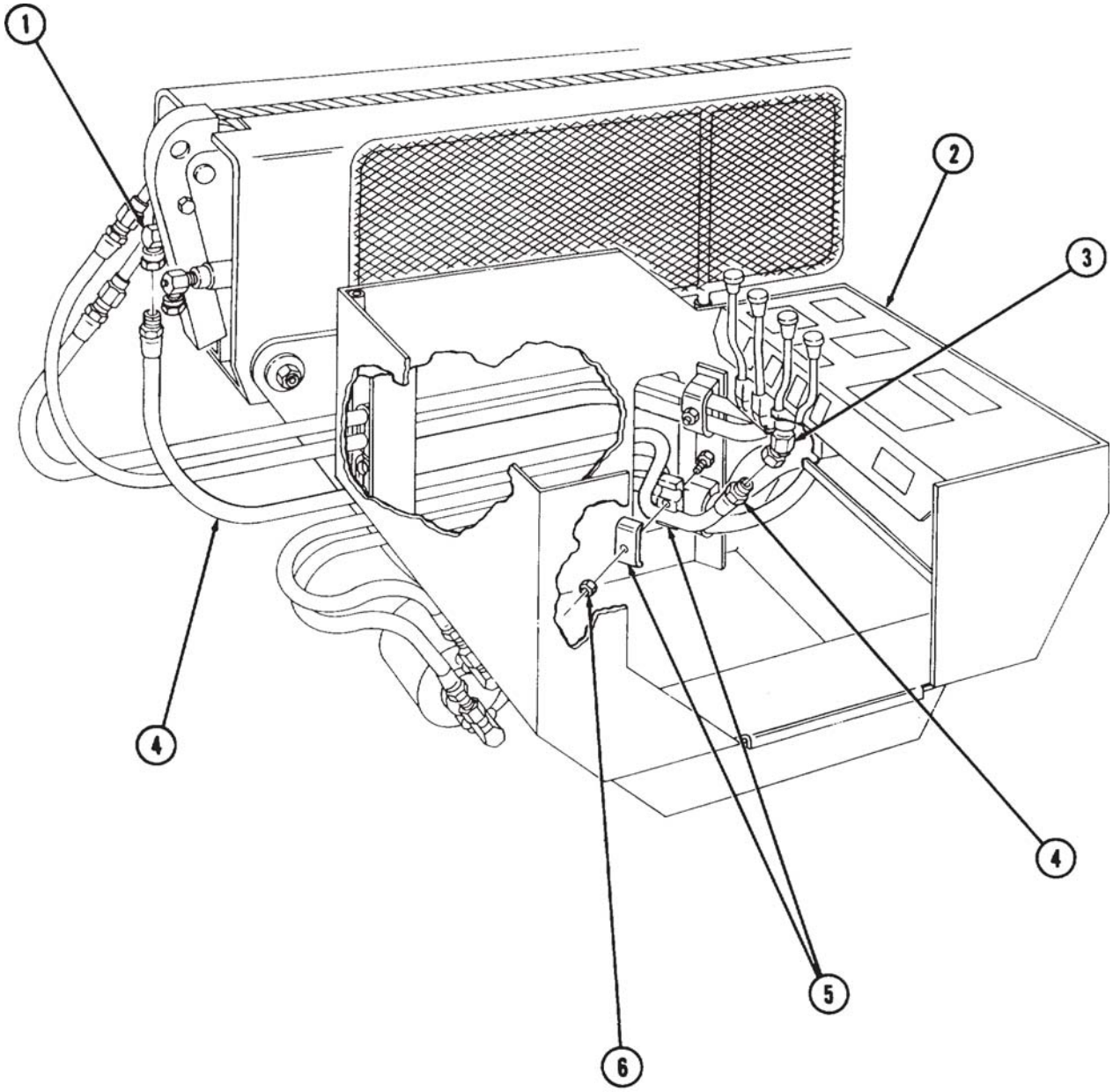

FOLLOW-ON TASKS: • Install restrictor valve (para. 13-32).
. Fill hydraulic oil reservoir (LO 9-2320-260-12).

13-35. WRECKER HYDRAULIC PRESSURE TEST AND ADJUSTMENT

THIS TASK COVERS:

a. Testing **b. Adjustment**

INITIAL SETUP

APPLICABLE MODELS

M816

REFERENCES (TM)

TM 9-2320-260-10
TM 9-2320-260-20P

EQUIPMENT CONDITION

- Parking brake set (TM 9-2320-260-10).
- Boom fully retracted (TM 9-2320-260-10).

a. Testing

1. Remove plug (6) from elbow (7).
2. Install hydraulic pressure gage fitting (5) on elbow (7).
3. Start engine (TM 9-2320-260-10).
4. Lower cable hook (1) enough to provide travel for pressure testing hydraulic system.
5. Hold boom crowd control lever (4) in retracted position and hoist control lever (3) in up position. Record reading on hydraulic pressure gage (2).
6. Reading on hydraulic pressure gage (2) should be 1200 psi (8274 kpa). If reading is not 1200 psi (8274 kpa), adjustment is required.

b. Adjustment

CAUTION

Never adjust relief valve without using pressure gage. Equipment failure will occur.

1. Remove capnut (11) from relief valve (8) and loosen nut (9).
2. Turn setscrew (10) clockwise to increase hydraulic pressure, or counterclockwise to decrease hydraulic pressure.
3. Hold setscrew (10) and tighten nut (9) on relief valve (8).
4. Install capnut (11) on relief valve (8).
5. Retest hydraulic pressure system.

13-35. WRECKER HYDRAULIC PRESSURE TEST AND ADJUSTMENT (Contd)

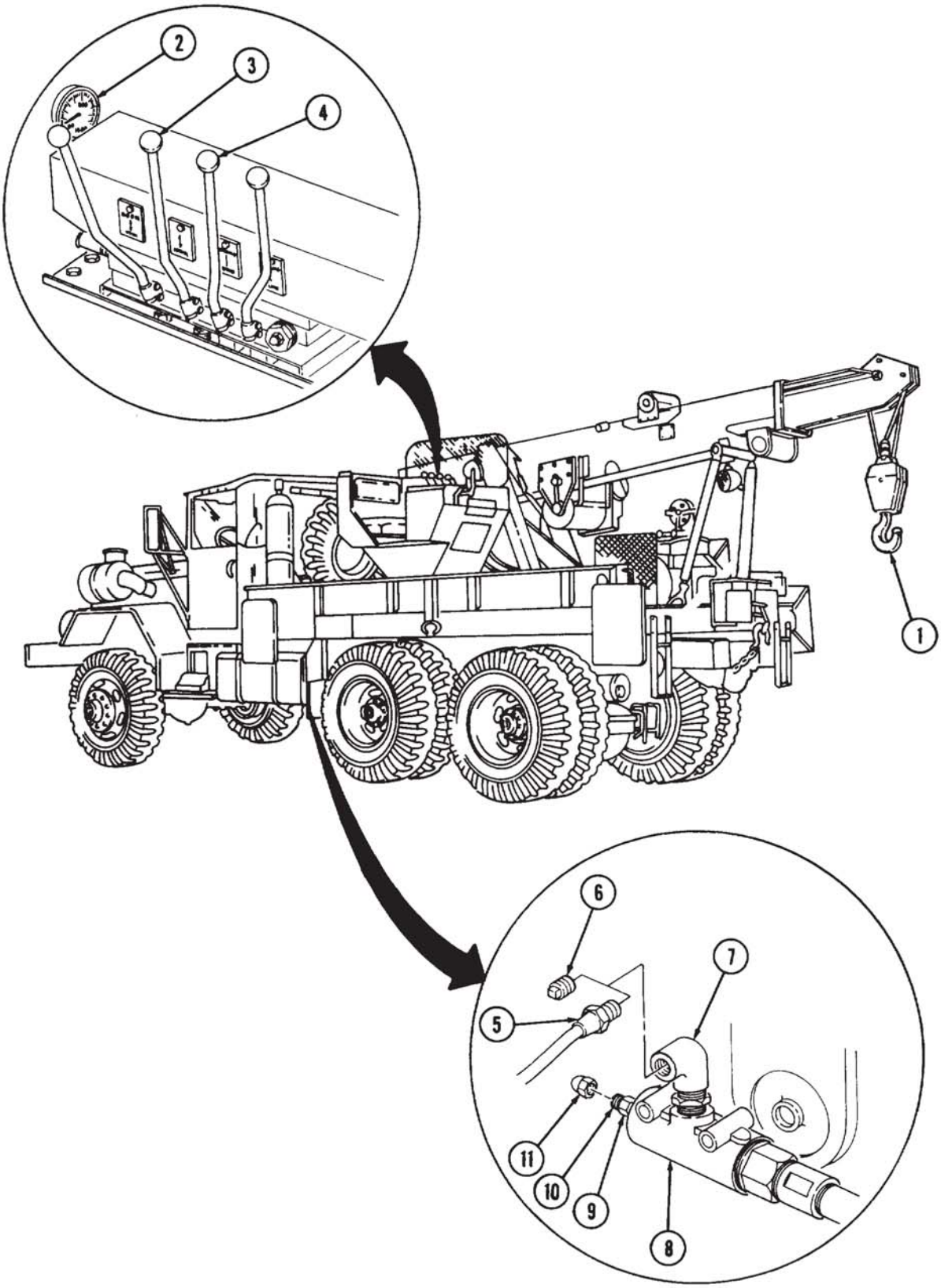

13-36. WRECKER LIFT CYLINDER PACKING ADJUSTMENT

THIS TASK COVERS:

Adjustment

INITIAL SETUP

APPLICABLE MODELS
M816

SPECIAL TOOLS
Spanner wrench P/N 11602326

REFERENCES (TM)
TM 9-2320-260-10
TM 9-2320-260-20P

EQUIPMENT CONDITION
Parking brake set (TM 9-2320-260-10).

Adjustment

1. Use spanner wrench (1) to tighten cylinder packing nut (3).
2. Raise and lower boom (2) (TM 9-2320-260-10) and inspect for oil leaks.
3. If cylinder packing nut (3) becomes tight and oil leak does not stop, notify your supervisor.

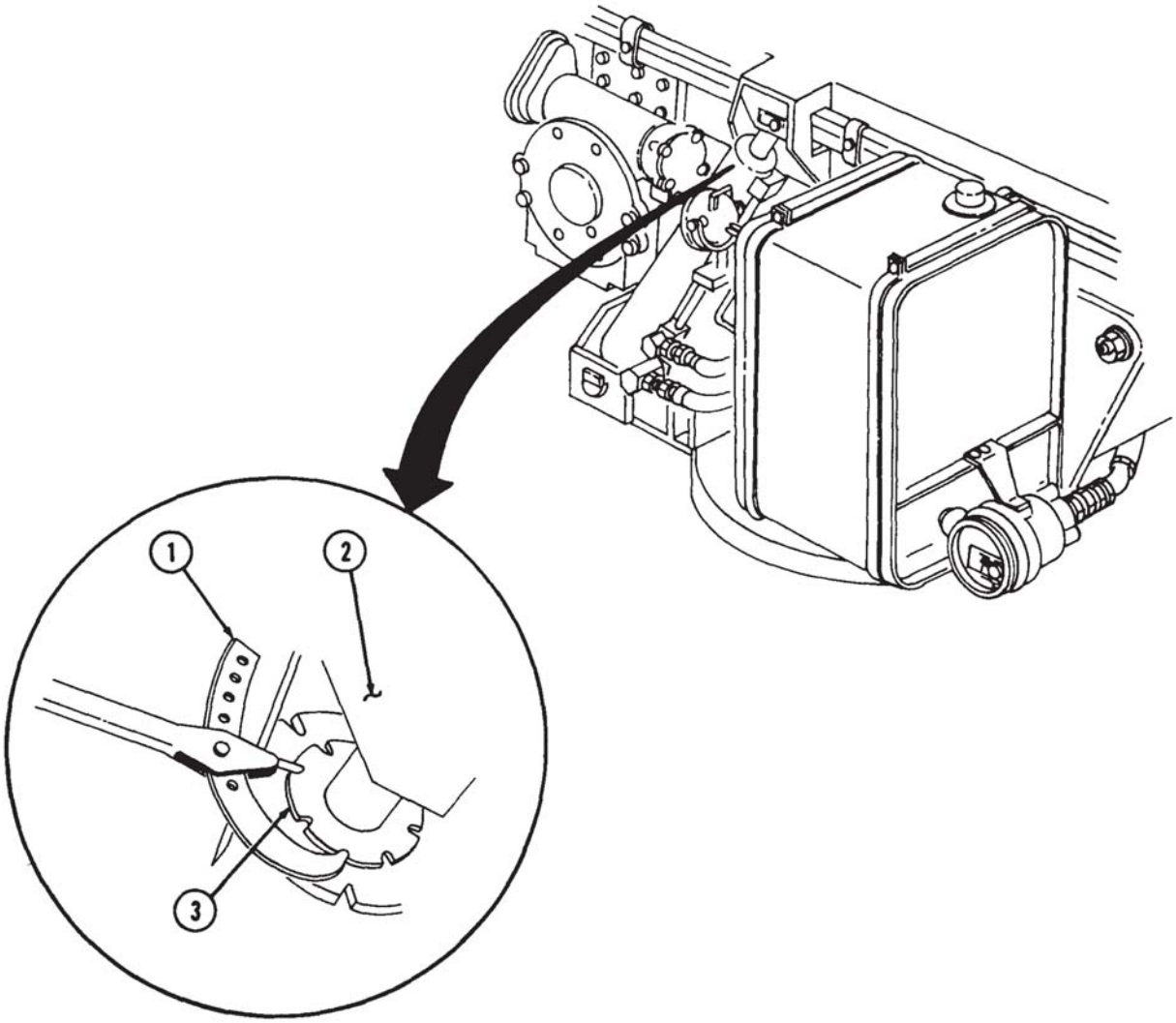

13-37. WRECKER INNER BOOM ROLLER ADJUSTMENT

THIS TASK COVERS:

Adjustment

INITIAL SETUP

APPLICABLE MODELS
M816

MATERIALS/PARTS
Sixteen lockwashers

REFERENCES (TM)
TM 9-2320-260-10
TM 9-2320-260-20P

EQUIPMENT CONDITION
Parking brake set (TM 9-2320-260-10).

Adjustment

1. Extend inner boom (2) 12 ft (4 m) (TM 9-2320-260-10).
2. Remove eight screws (3) and lockwashers (4) from two adjustment caps (5) (one on each side). Discard lockwashers (4).
3. Turn two mounting caps (5) until inner boom (2) is parallel with outer boom (1). Turn mounting caps clockwise to lower inner boom (2) or counterclockwise to raise inner boom (2).
4. Install eight new lockwashers (4) and screws 3) in two adjustment caps (5).
5. Extend inner boom 15 ft (5 m) (TM 9-2320-260-10).
6. Repeat steps 2,3, and 4 for upper boom roller (6).

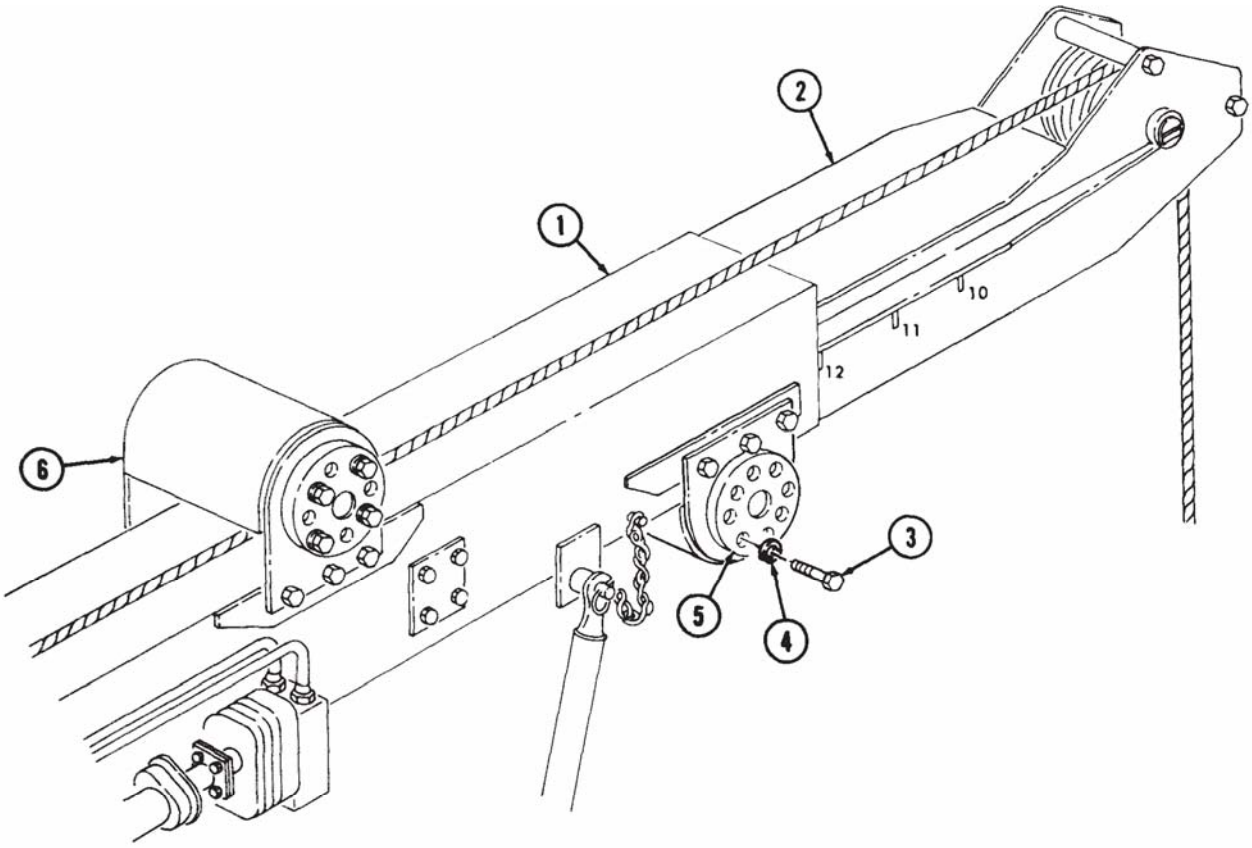

13-38. WRECKER BOOM SUPPORT REPLACEMENT (M816, M819)

THIS TASK COVERS:

a. Removal b. Installation

INITIAL SETUP

APPLICABLE MODELS
M816, M819

PERSONNEL REQUIRED
Two

REFERENCES (TM)
TM 9-2320-260-10
TM 9-2320-260-20P

EQUIPMENT CONDITION
Parking brake set (TM 9-2320-260-10).

a. Removal

1. Remove cotter pin (1) from retaining pin (8).
2. Remove retaining pin (8) from outer support tube (2) and inner support tube (9).
3. Remove lockpins (7) and (5) from nipples (6) and (4).
4. Remove inner support tube (9) and outer support tube (2) from boom (3).

1. Position inner support tube (9) and outer support tube (2) on boom (3).
2. Install retaining pin (8) on outer support tube (2) and inner support tube (9) with cotter pin (1).
3. Install lockpins (7) and (5) on nipples (6) and (4).

13-38. WRECKER BOOM SUPPORT REPLACEMENT (M816, M819) (Contd)

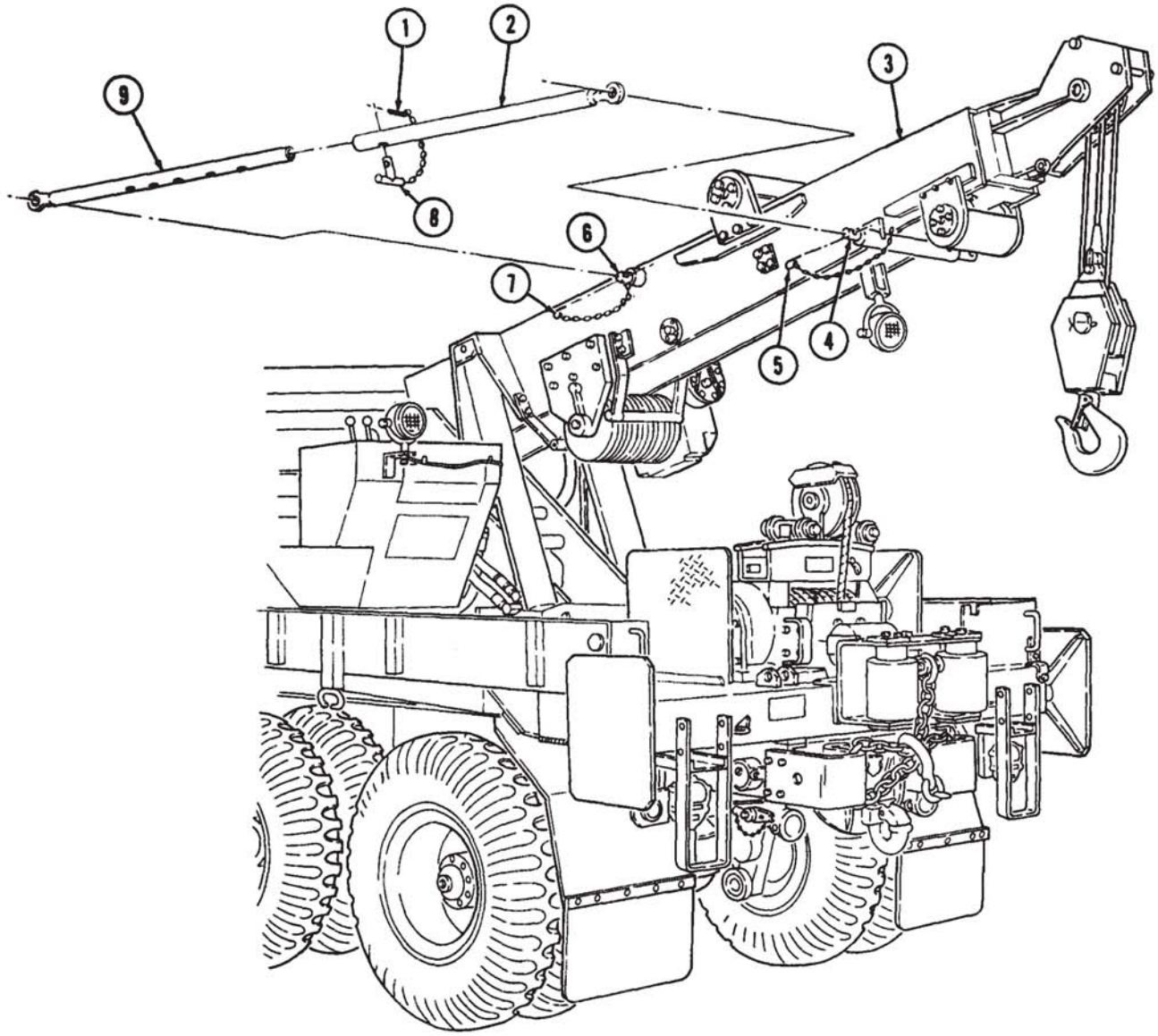

13-39. WRECKER HOIST WINCH BLOCK REPLACEMENT (M816, M819)

THIS TASK COVERS:

a. Direct Block Removal
b. Direct Block Installation
c. Pulley Block Removal
d. Pulley Block Installation

INITIAL SETUP

APPLICABLE MODELS
M816, M819

MATERIALS/PARTS
Two locknuts

REFERENCES (TM)
TM 9-2320-260-10
TM 9-2320-260-20P

EQUIPMENT CONDITION
- Parking brake set (TM 9-2320-260-10).
- Pay out cable (TM 9-2320-260-10).

GENERAL SAFETY INSTRUCTIONS
Wear hand protection when handling winch cable.

WARNING

Wear hand protection when handling winch cable. Broken wires may cause injury to personnel.

NOTE

- Maintain manual tension on hoist cable when removing block from cable.
- Winch block may be installed various ways for different loads. This procedure covers two block rigging methods.

a. Direct Block Removal

Remove locknut (3), screw (1), and block (4) from clevis (2). Discard locknut (3).

b. Direct Block Installation

Install block (4) on clevis (2) with screw (1) and new locknut (3).

c. Pulley Block Removal

1. Remove locknut (7), screw (5), and clevis (10) from boom (6). Discard locknut (7).
2. Remove cable (9) from block (8).

d. Pulley Block Installation

1. Install block (8) on cable (9).
2. Install clevis (10) on boom (6) with screw (5) and new locknut (7).

13-39. WRECKER HOIST WINCH BLOCK REPLACEMENT (M816, M819) (Contd)

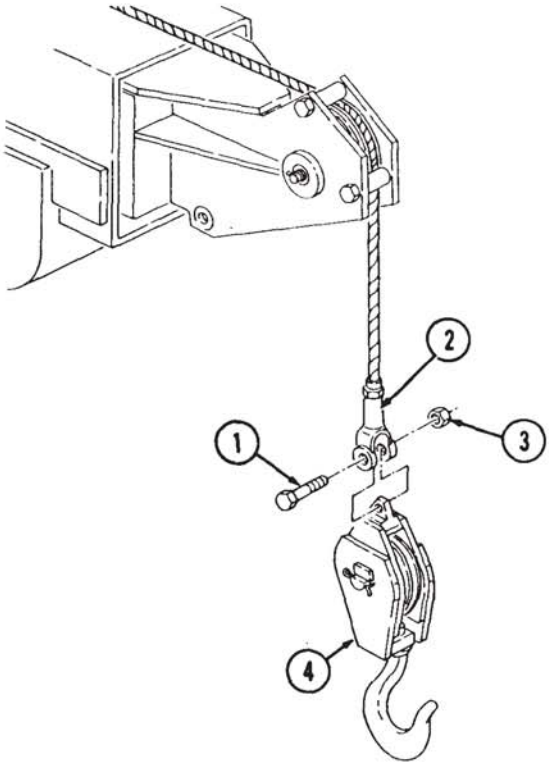

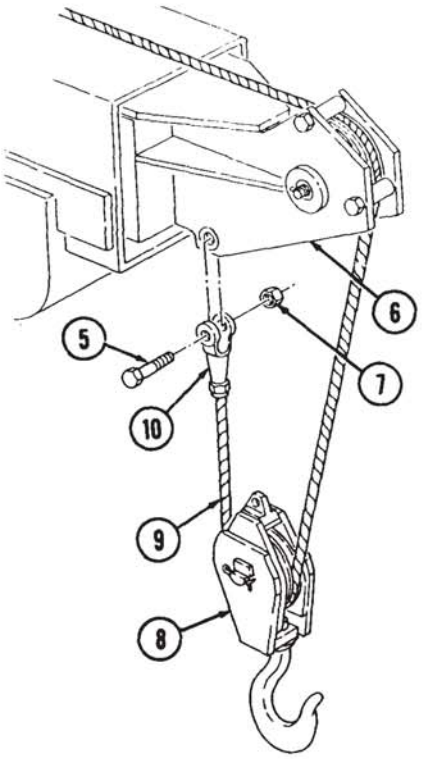

13-40. WRECKER THROTTLE CONTROL LEVER REPLACEMENT

THIS TASK COVERS:

a. Removal **b. Installation**

INITIAL SETUP

APPLICABLE MODELS
M816

MATERIALS/PARTS
Locknut
Cotter pin
Two lockwashers

REFERENCES (TM)
TM 9-2320-260-10
TM 9-2320-260-20P

EQUIPMENT CONDITION
Parking brake set (TM 9-2320-260-10).

a. Removal

1. Remove locknut (7) and washer (8) from stud (10). Discard locknut (7).
2. Remove cotter pin (5) from retaining pin (6). Discard cotter pin (5).
3. Remove retaining pin (6) and clevis yoke (9) from lever (4).
4. Remove lever (4) from stud (10).
5. Remove stud (10) from selector plate (1).
6. Remove indicator point (2) from stud (3).
7. Remove stud (3) from lever (4).
8. Remove two nuts (14), lockwashers (13), screws (11). and selector plate (1) from mounting bracket (12). Discard lockwashers (13).

b. Installation

1. Install selector plate (1) on mounting bracket (12) with two screws (11), new lockwashers (13), and nuts (14).
2. Install stud (3) on lever (4).
3. Install indicator point (2) on stud (3).
4. Install stud (10) on selector plate (1).
5. Position lever (4) on stud (10).
6. Install clevis yoke (9) on lever (4) with retaining pin (6) and new cotter pin (5).
7. Install washer (8) and new locknut (7) on stud (10).

13-40. WRECKER THROTTLE CONTROL LEVER REPLACEMENT (Contd)

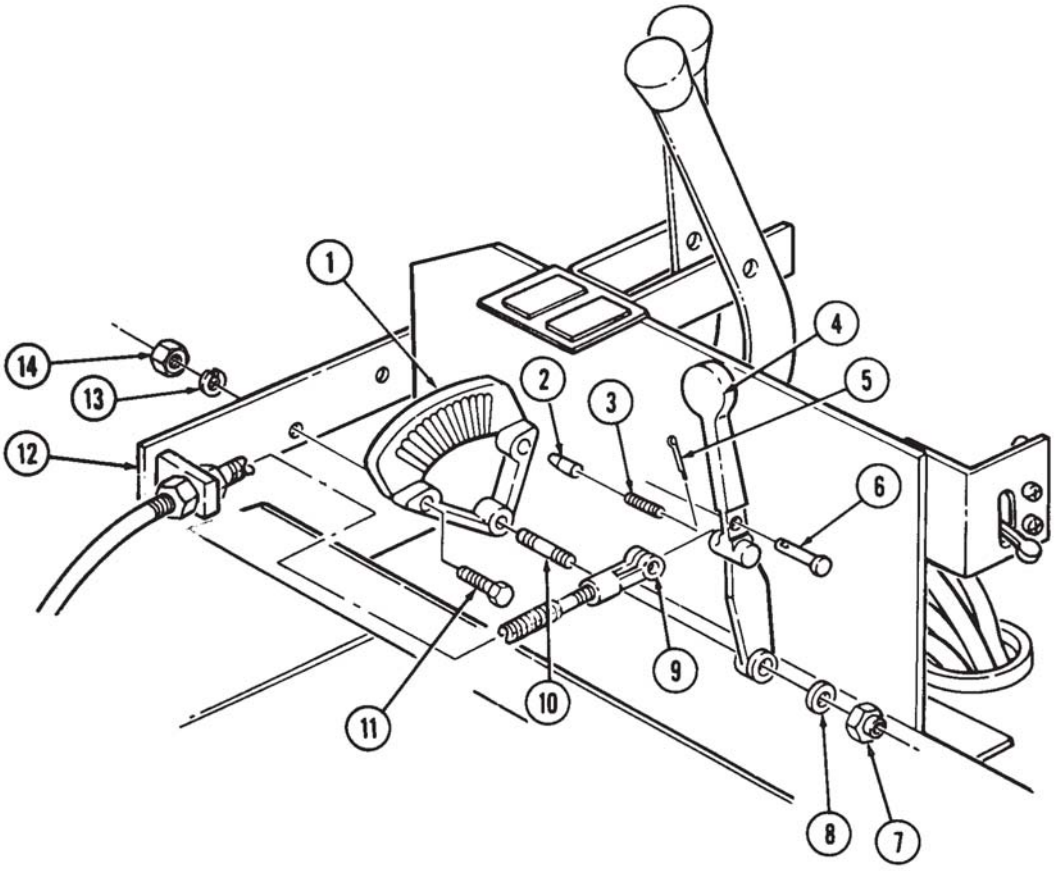

13-41. WRECKER THROTTLE CONTROL CABLE MAINTENANCE

THIS TASK COVERS:

a. Removal
b. hstallation
c. Adjustment

INITIAL SETUP

APPLICABLE MODELS
M816

MATERIALS/PARTS
Two locknuts

REFERENCES (TM)
TM 9-2320-260-10
TM 9-2320-260-20P

EQUIPMENT CONDITION
- Parking brake set (TM 9-2320-260-10).
- Throttle control lever removed (para. 13-40).

a. Removal

1. Remove clevis yoke (4) and nuts (3) and (2) from cable (l).
2. Remove cable (1) from bracket (5).

NOTE

Tag location of clamps before removing cable.

3. Remove locknut (10), washer (9), and cable clamp (8) from accelerator stop (7). Discard locknut (10).
4. Remove locknut (13), washer (12), screw (6), and cable clamp (14) from bracket (11). Discard locknut (13).
5. Remove setscrew (17), collar (16), and cable (1) from cable linkage (15).
6. Remove cable clamps (8) and (14) from cable (1).

b. Installation

1. Position cable clamps (8) and (14) on cable (1).
2. Install cable (1) on cable linkage (15) with collar (16) and setscrew (17).
3. Install cable clamp (14) on bracket (11) with screw (6), washer (12), and new locknut (13). Do not tighten locknut (13).
4. Install cable clamp (8) on accelerator stop (7) with washer (9) and new locknut (10). Do not tighten locknut (10).
5. Install cable (1) on bracket (5) with nuts (2) and (3) and clevis yoke (4).
6. Tighten locknuts (10) and (13).

c. Adjustment

1. Remove locknuts (10) and (13) and washers (9) and (12) from cable clamps (8) and (14).
2. Position cable (1), as necessary, and secure with washers (9) and (12) and new locknuts (10) and (13).

13-41. WRECKER THROTTLE CONTROL CABLE MAINTENANCE (Contd)

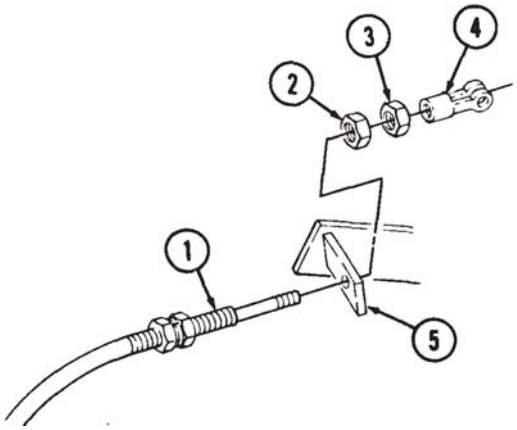

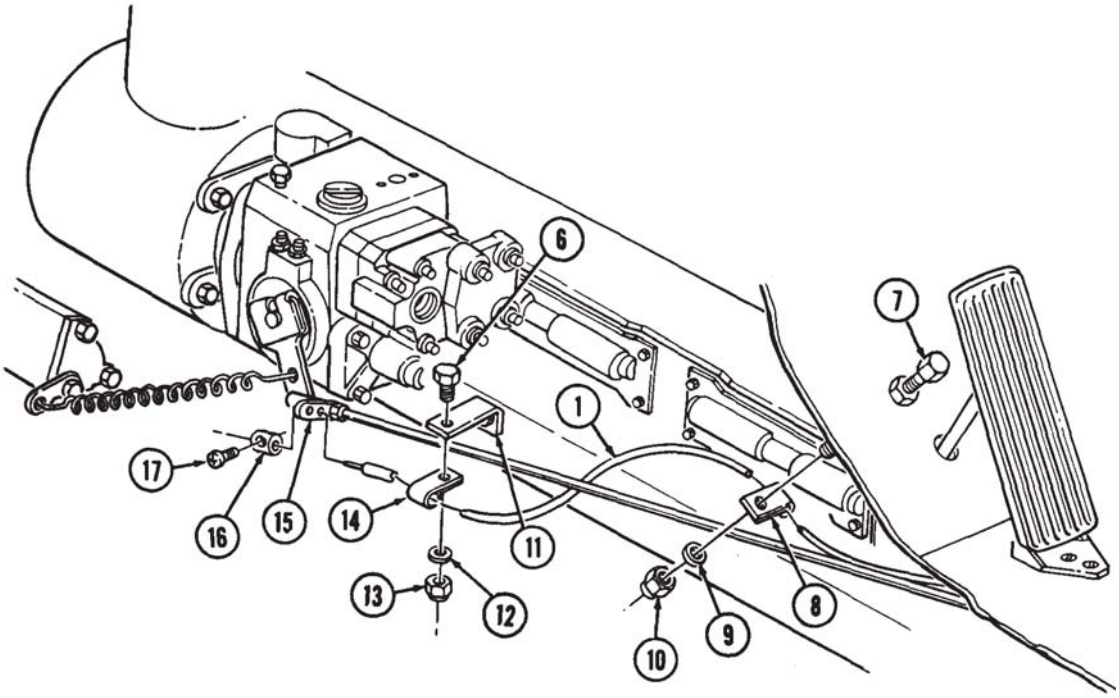

FOLLOW-ON TASK: Install throttle control lever (para. 13-40).

13-42. HOIST WINCH CABLE REPLACEMENT (M816, M819)

THIS TASK COVERS:

a. Removal **b. Installation**

INITIAL SETUP

APPLICABLE MODELS
M816, M819

MATERIALS/PARTS
Four lockwashers
Two locknuts

PERSONNEL REQUIRED
Two

REFERENCES (TM)
TM 9-2320-260-10
TM 9-2320-260-20P

EQUIPMENT CONDITION
- Parking brake set (TM 9-2320-260-10).
- Wrecker hoist winch block removed (para. 13-39).

GENERAL SAFETY INSTRUCTIONS
Wear hand protection when handling winch cable.

WARNING

Wear hand protection when handling winch cable. Broken wires may cause injury to personnel.

NOTE

Maintain manual tension on hoist cable.

a. Removal

1. Remove four screws (7), lockwashers (6), washers (5), and guard (4) from rear sheaves (8). Discard lockwashers (6).
2. Remove two locknuts (2), screws (11), and spacers (1) from inner boom (10). Discard locknuts (2).
3. Remove setscrew (12) and cable (9) from hoist winch drum (13).
4. Firmly grasp cable (9) and remove cable (9) from boom (3),

b. Installation

1. Guide and position cable (9) on boom (3) and rear sheaves (8).
2. Install cable (9) on hoist winch drum (13) with setscrew (12).
3. Install two spacers (1) on inner boom (10) with two screws (11) and new locknuts (2).
4. Install guard (4) on boom (3) with four washers (5), new lockwashers (6), and screws (7).

13-42. HOIST WINCH CABLE REPLACEMENT (M816, M819) (Contd)

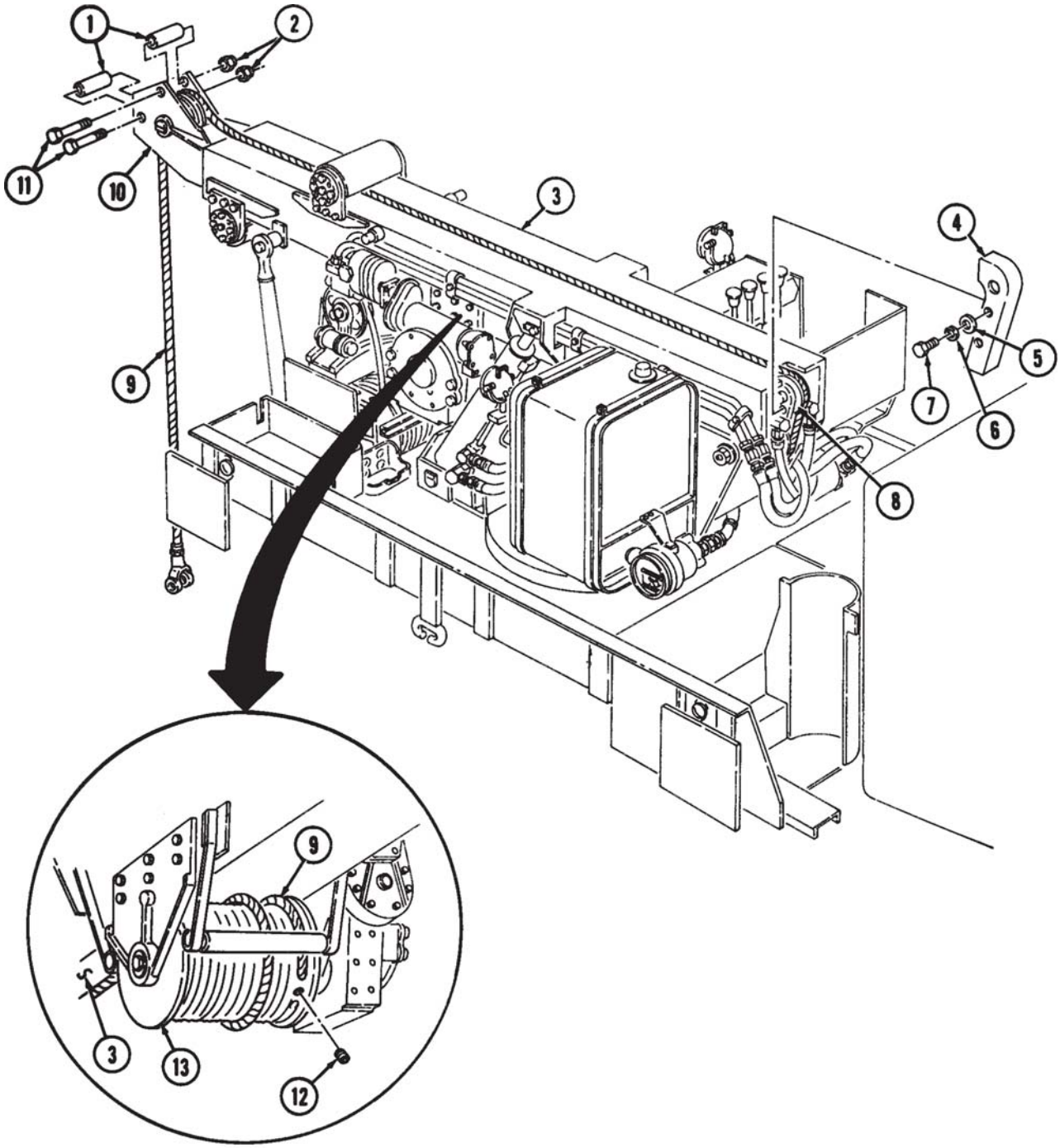

FOLLOW-ON TASK: Install wrecker hoist winch block (para. 13-39).

13-43. HOIST WINCH AUTOBRAKE MAINTENANCE (M816, M819)

THIS TASK COVERS:

a. Removal
b. Adjustment
c. Installation

INITIAL SETUP

APPLICABLE MODELS
M816, M819

MATERIALS/PARTS
Gasket
Six screw-assembled lockwashers

REFERENCES (TM)
TM 9-2320-260-10
TM 9-2320-260-20P

EQUIPMENT CONDITION
Parking brake set (TM 9-2320-260-10).

a. Removal

1. Remove six screw-assembled lockwashers (1), cover (2), and gasket (3) from brake housing case (4). Discard gasket (3) and screw-assembled lockwashers (1).
2. Clean gasket (3) remains from brake housing case (4).

b. Adjustment

Adjust screw (5) until gap between housing (4) wall and brake band (6) is 1-3/16 to 1-1/4 in. (30-32 mm).

c. Installation

Install new gasket (3) and cover (2) on brake housing case (4) with six new screw-assembled lockwashers (1).

13-43. HOIST WINCH AUTOBRAKE MAINTENANCE (M816, M819) (Contd)

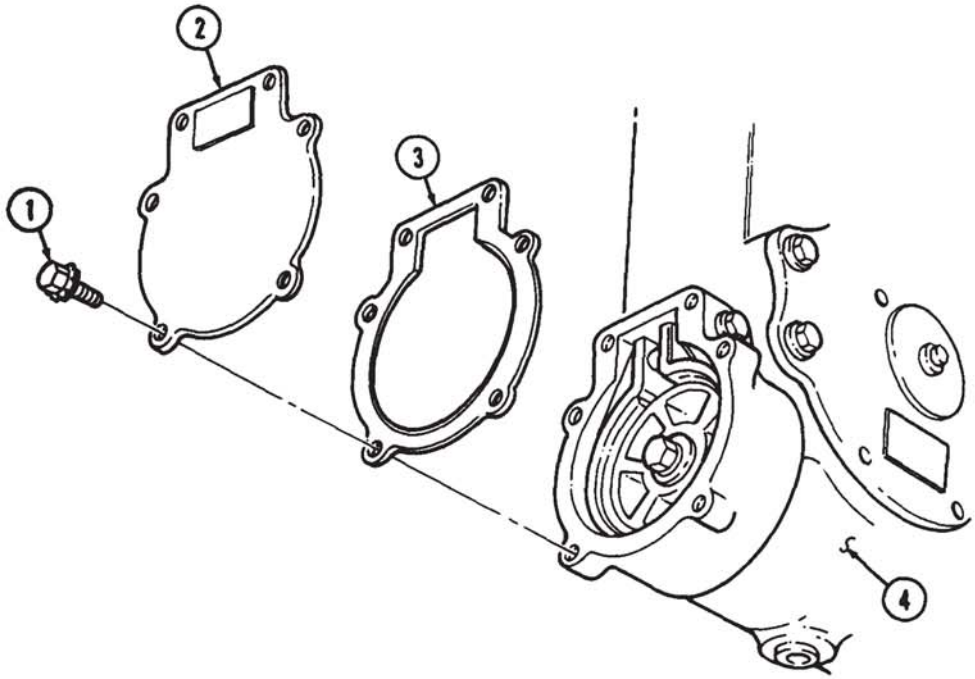

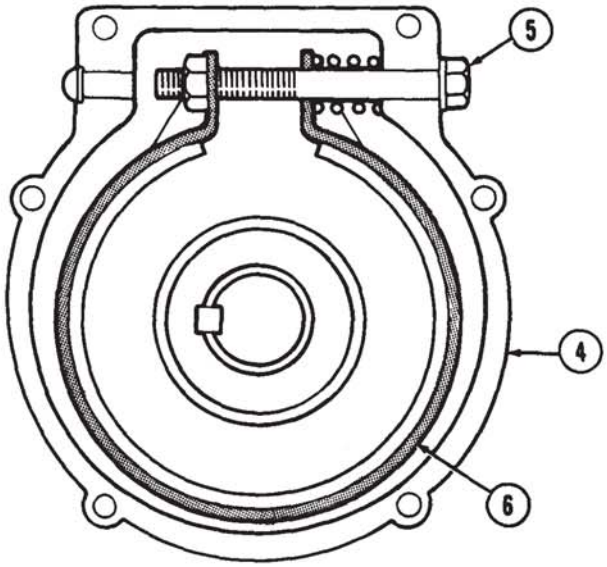

13-44. TRACTOR WRECKER CONTROL VALVE REPLACEMENT

THIS TASK COVERS:

a. Removal

b. Installation

INITIAL SETUP

APPLICABLE MODELS

M819

MATEWALS/PARTS

Three locknuts
Antiseize tape (Appendix C, Item 30)
Cap and plug set (Appendix C, Item 9)

REFERENCES (TM)

LO 9-2320-260-12
TM 9-2320-260-10
TM 9-2320-260-20P

EQUIPMENT CONDITION

- Parking brake set (TM 9-2320-260-10).
- Hydraulic oil tank drained (LO 9-2320-260-12).
- Battery ground cable disconnected (para. 4-48).

GENERAL SAFETY INSTRUCTIONS

- All personnel must stand clear during lifting operations.
- Ensure lifting capacity is greater than weight of control valve bank.

a. Removal

1. Remove screw (4) and wire (3) from windshield wiper motor (2).
2. Remove screw (9) and wiper arm (8) from shaft (5).
3. Remove slotted nut (10) and adapter (11) from shaft (5).
4. Remove two nuts (7), lockwasher (12), washer (13), and seal (14) from shaft (5).
5. Remove windshield wiper motor (2) from cab front panel (15).
6. Working inside cab, remove seven screws (1) and plate panel (23) from two cab brackets (16).
7. Remove two nuts (19) and clamp (20) from two studs (21) and tubes (6) on inside left wall of cab (22).

CAUTION

- Clean area around hoses and lines before removal to prevent entry of dirt. Damage will occur if dirt or dust enters system.
- Cap or plug all openings immediately after disconnecting lines and hoses to prevent contamination. Remove caps or plugs prior to installation. Failure to do so may result in damage to hydraulic system.

NOTE

- Have drainage container ready to catch oil.
- Tag hydraulic hoses and tubes for installation.

8. Remove seven tubes (6) and four hoses (18) from control valve (17).

13-44. TRACTOR WRECKER CONTROL VALVE REPLACEMENT (Contd)

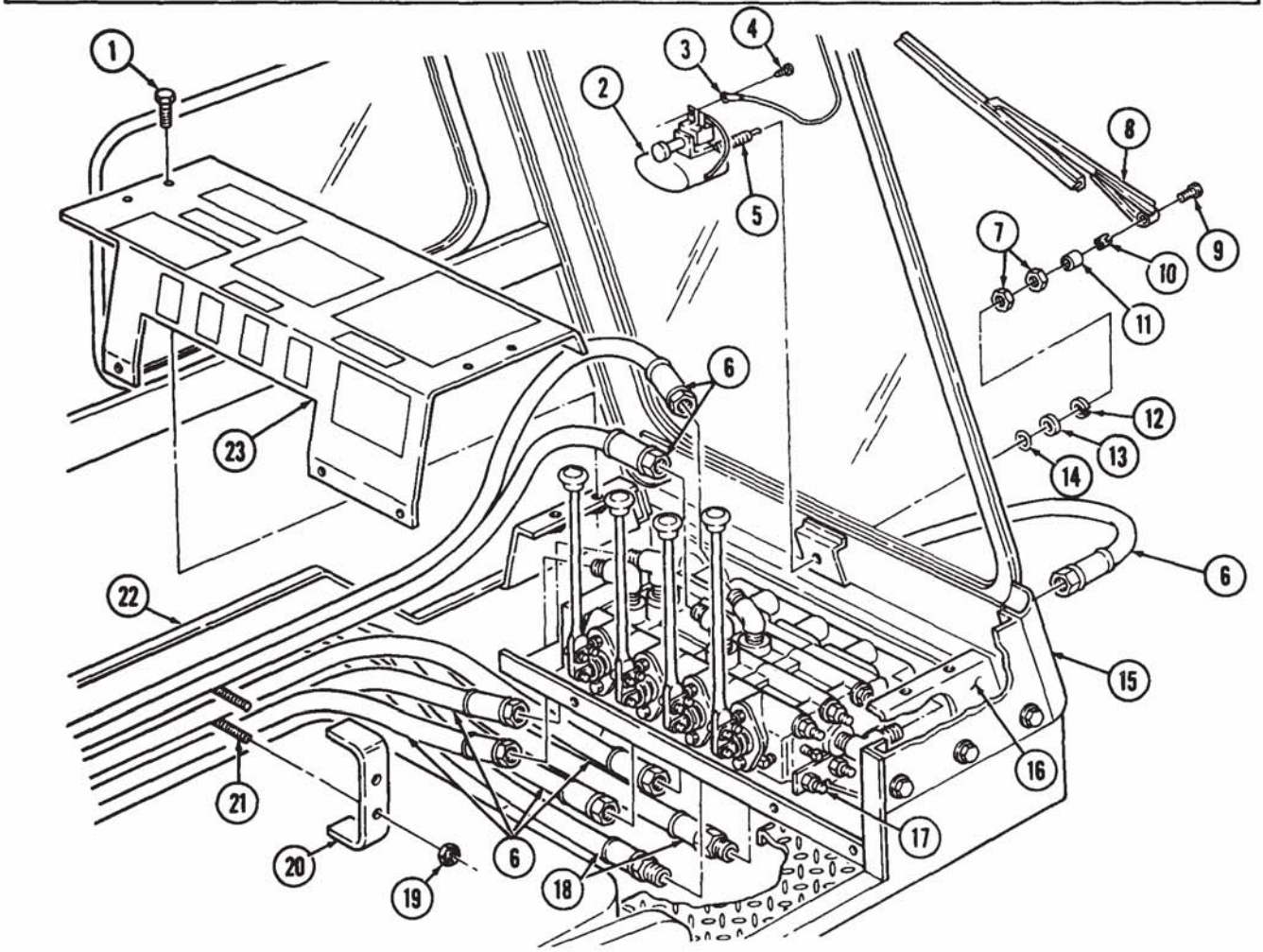

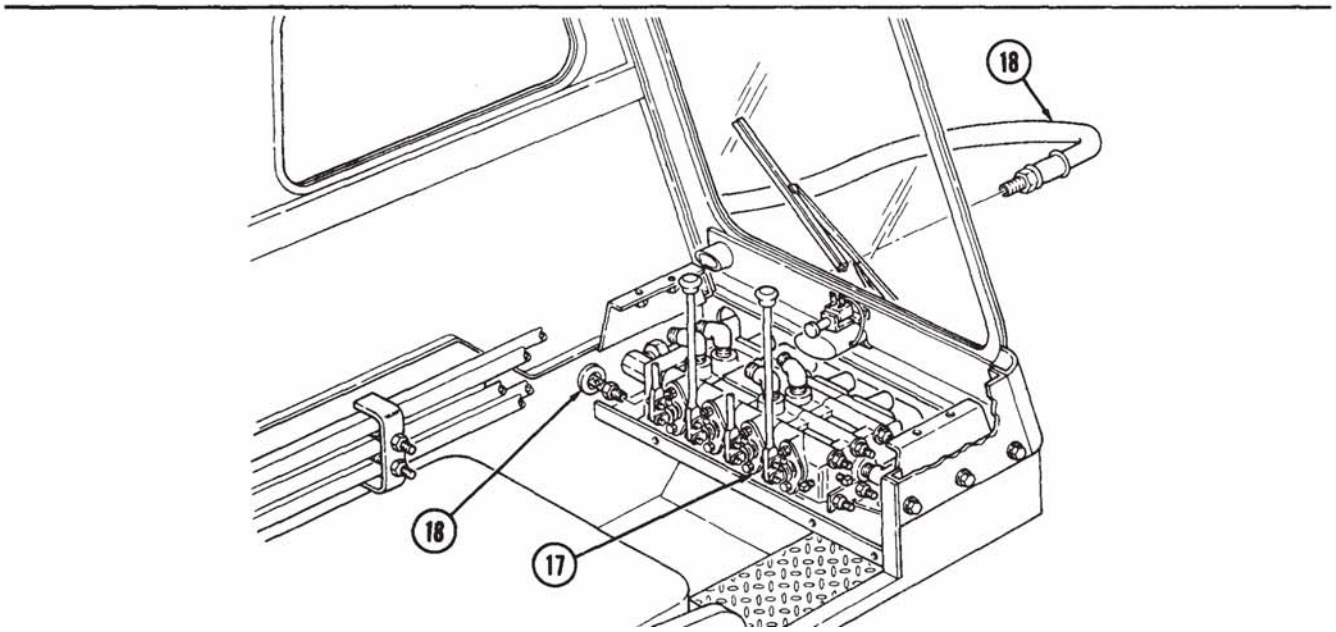

13-44. TRACTOR WRECKER CONTROL VALVE REPLACEMENT (Contd)

9. Remove three locknuts (4) and screws (1) from control valve (2) and bracket (5). Discard locknuts (4).
10. Attach chain to control valve (2) and lifting device.

WARNING

- All personnel must stand clear during lifting operations. A swinging or shifting load may cause injury to personnel.
- Ensure lifting capacity is greater than weight (165 lb (75 kg)) of control valve. Failure to do so may result in injury to personnel or damage to equipment.

NOTE

Assistant will help with step 11.

11. Remove control valve (2) from cab (3) and place in work area.
12. Remove chain from control valve (2) and lifting device.

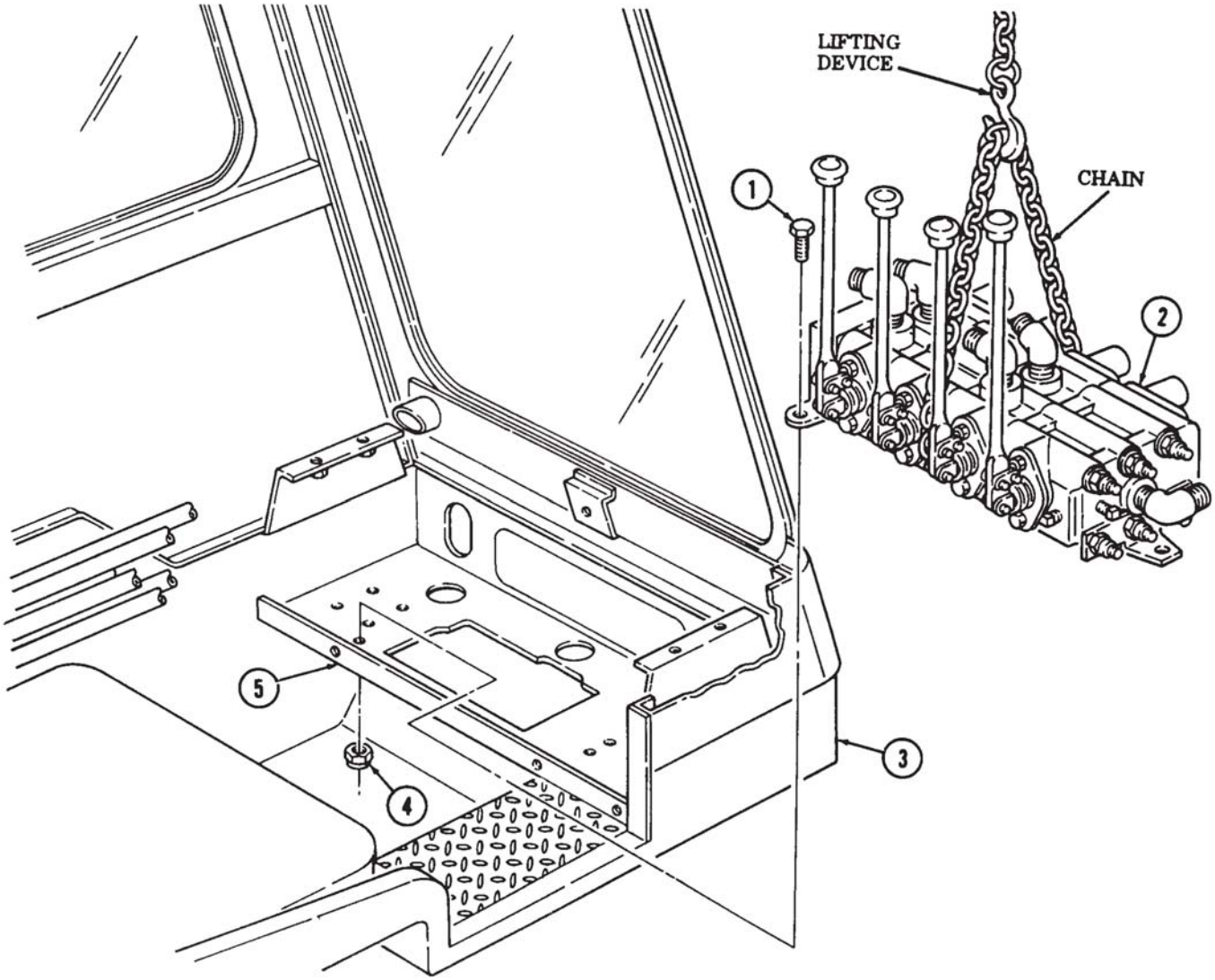

13-44. TRACTOR WRECKER CONTROL VALVE REPLACEMENT (Contd)

NOTE

- Perform steps 13 and 14 if new control valve is to be installed.
- Tag elbows and adapter elbows for installation.
- Record angle positions of fittings for assembly.

13. Remove elbow (8) and adapter elbow (6) from control valve (2).
14. Remove six elbows (7) and two adapter elbows (9) from control valve (2).

b. Installation

NOTE

Perform steps 1,2, and 3 for installation of new control valve.

1. Wrap male threads of six elbows (7), two adapter elbows (9), elbow (8), and adapter elbow (6) with antiseize tape.
2. Install six elbows (7) and two adapter elbows (9) on control valve (2) to angle positions previously recorded.

NOTE

Elbow and adapter elbow must point to rear of control valve when tightened.

3. Install elbow (8) and adapter elbow (6) on ends of control valve (2).

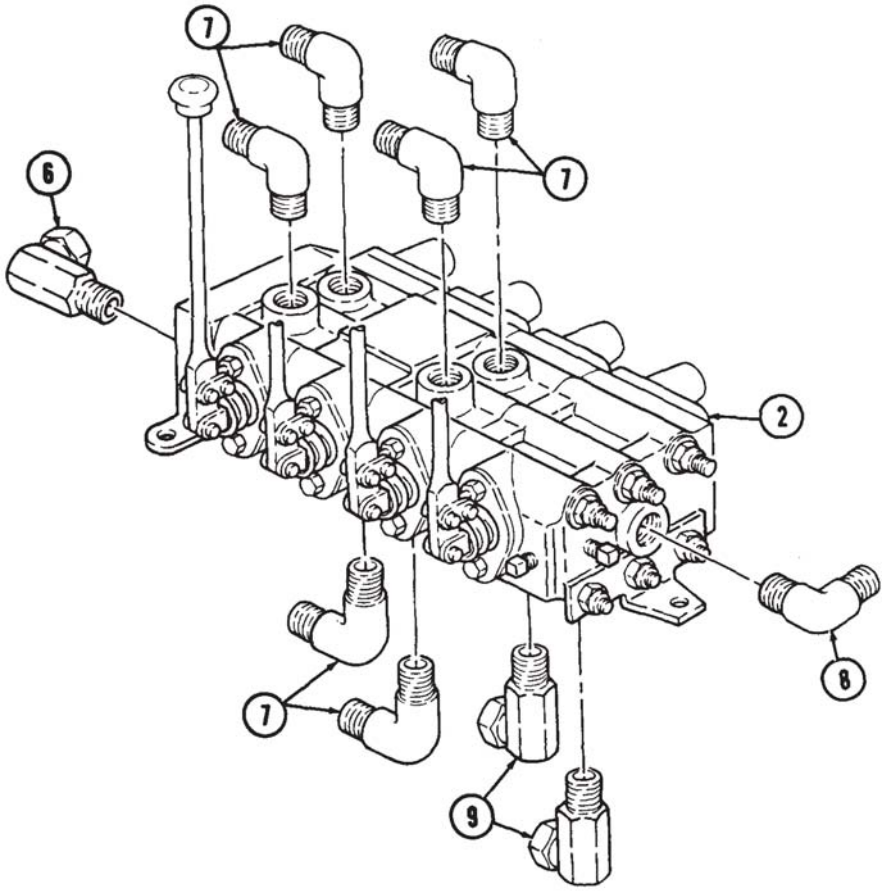

13-44. TRACTOR WRECKER CONTROL VALVE REPLACEMENT (Contd)

4. Attach chain to control valve (2) and lifting device.

WARNING

- All personnel must stand clear during lifting operations. A swinging or shifting load may cause injury to personnel.
- Ensure lifting capacity is greater than weight (165 lb (75 kg)) of control valve. Failure to do so may result in injury to personnel or damage to equipment.

NOTE

Assistant will help with step 5.

5. Move control valve (2) from work area and install on bracket (5) in cab (3) with three screws (1) and new locknuts (4).
6. Remove chain from control valve (2) and lifting device.
7. Wrap male threads of four hoses (6) with anti seize tape.
8. Connect seven tubes (13) and four hoses (6) to control valve (2).
9. Position clamp (24) over seven tubes (13) and install clamp (24) on two studs (25) with nuts (23).
10. Install plate panel (7) on two brackets (5) with seven screws (8).
11. Position windshield wiper motor (9) on front panel of cab (3) and install with seal (22), washer (21), lockwasher (20), and nuts (19) and (14).
12. Install adapter (18) and slotted nut (15) on shaft (12).
13. Install wiper arm (16) on shaft (12) with screw (17).
14. Connect wire (10) to windshield wiper motor (9) with screw (11).

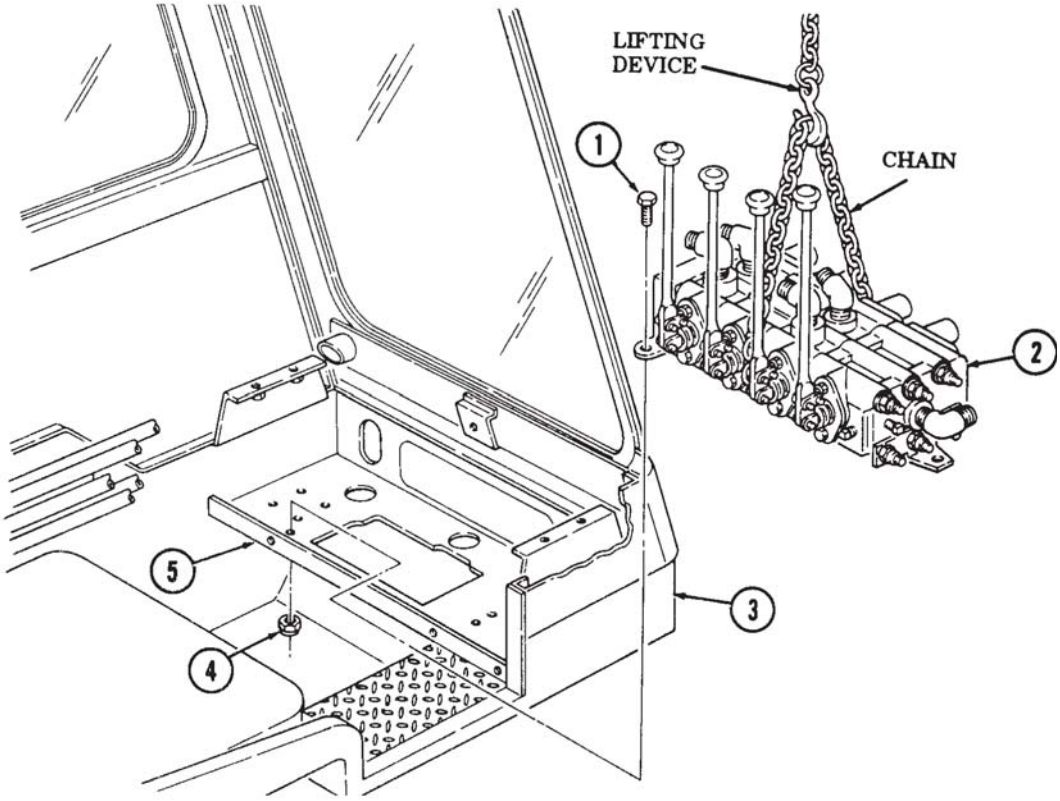

13-44. TRACTOR WRECKER CONTROL VALVE REPLACEMENT (Contd)

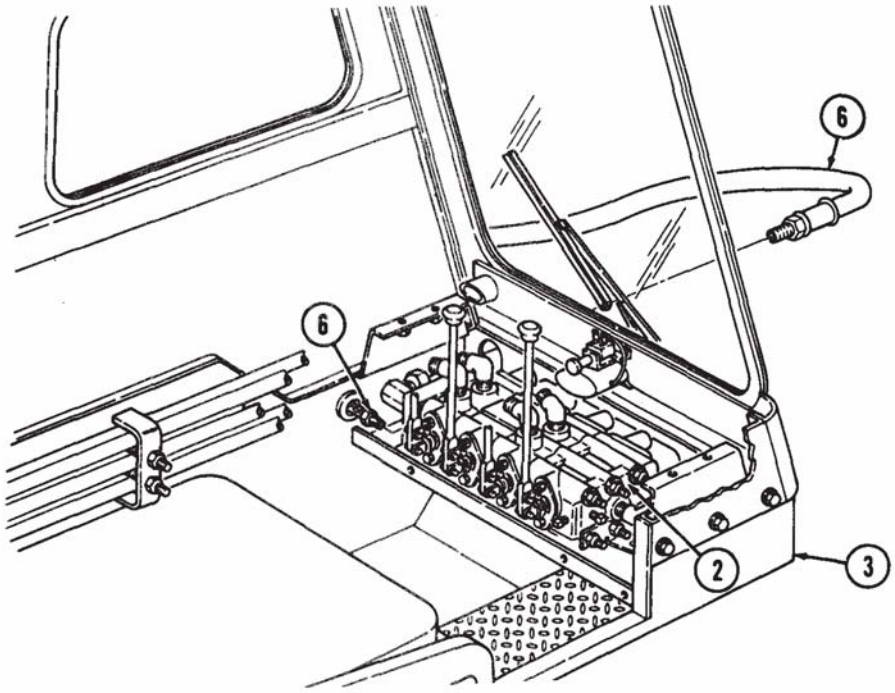

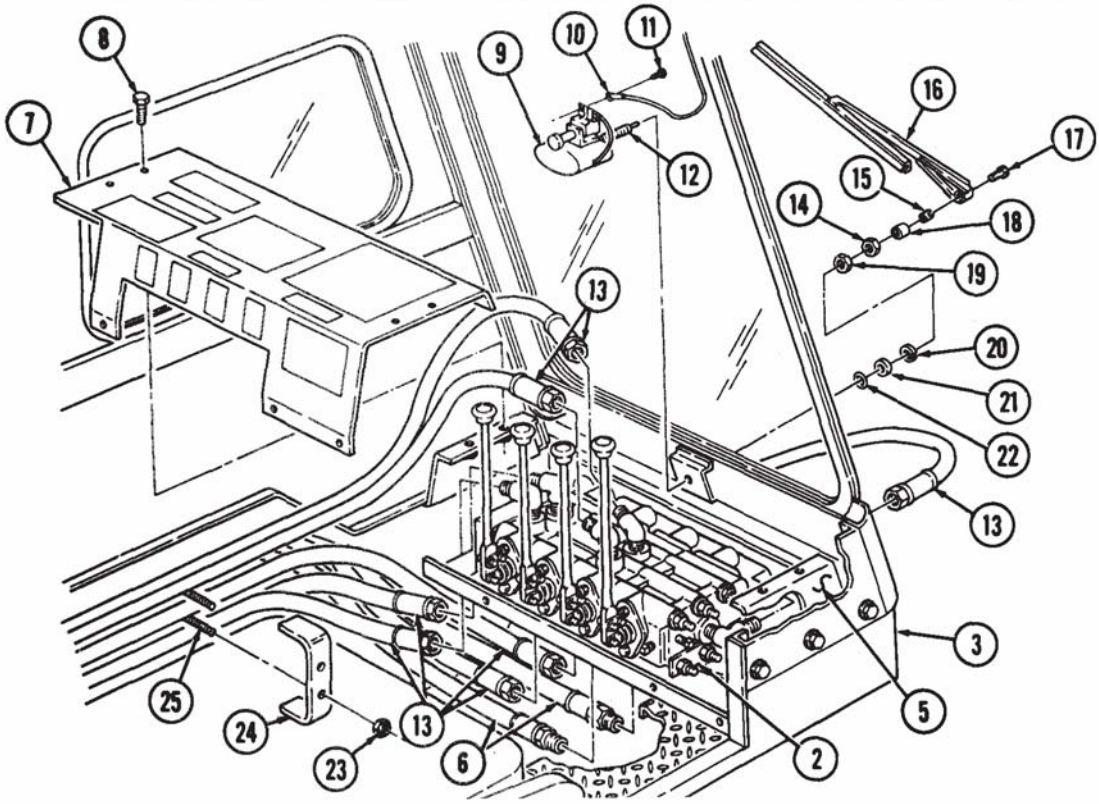

FOLLOW-ON TASKS: • Connect battery ground cable (para. 4-48).
• Fill hydraulic oil tank (LO 9-2320-260-12).
• Check crane operation and check for leaks (TM 9-2320-260-10).

13-45. TRACTOR WRECKER HYDRAULIC LINES REPLACEMENT

THIS TASK COVERS:

a. Removal **b. Installation**

INITIAL SETUP

APPLICABLE MODELS
M816, M819

MATERIALS/PARTS
Cap and plug set (Appendix C, Item 9)

REFERENCES (TM)
LO 9-2320-260-12
TM 9-2320-260-10
TM 9-2320-260-20P

EQUIPMENT CONDITION
- Parking brake set (TM 9-2320-260-10).
- Shipper brake placed in travel position (TM 9-2320-260-10).
- Drain hydraulic system (LO 9-2320-260-12).

NOTE

There are three types of hydraulic hose and tube connections found on the M816 and M819 wreckers. This procedure covers the solid female and swivel male connection.

a. Removal

CAUTION

- Clean area around hoses and lines before removal to prevent entry of dirt. Damage will occur if dirt or dust enters system.
- Cap or plug all openings after disconnecting tubes and hoses to prevent contamination. Remove caps or plugs prior to installation. Failure to do so may result in hydraulic pump damage.
- Do not twist hose during removal. Damage to hose may occur,

NOTE

- Tag all hoses and tubes for installation.
- Use more than one wrench for removal and installation of hoses and tubes.
- Hose and fittings connected by a single hexagonal nut cannot be disconnected until the swivel nut connection at the opposite end is removed. The entire hose must be free to turn when removing this type of hose connection.
- Have drainage container ready to catch oil.

1. Separate hoses (1) and (2) from tubes (7) and (8).
2. Remove hose (2) from checkvalve (4).
3. Remove hose (1) from elbow (3).
4. Remove bypass hose (6) from elbow (5).
5. Remove bypass hose (6) from elbow (9).

13-45. TRACTOR WRECKER HYDRAULIC LINES REPLACEMENT (Contd)

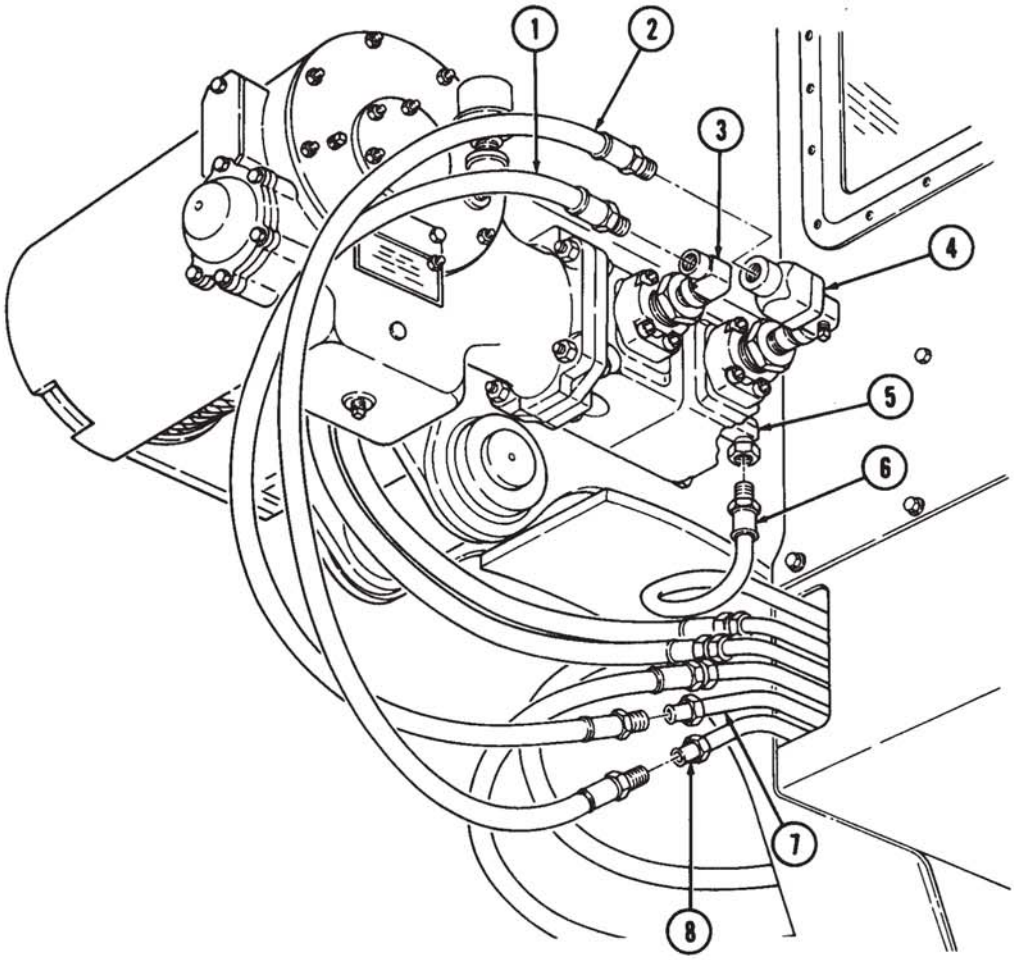

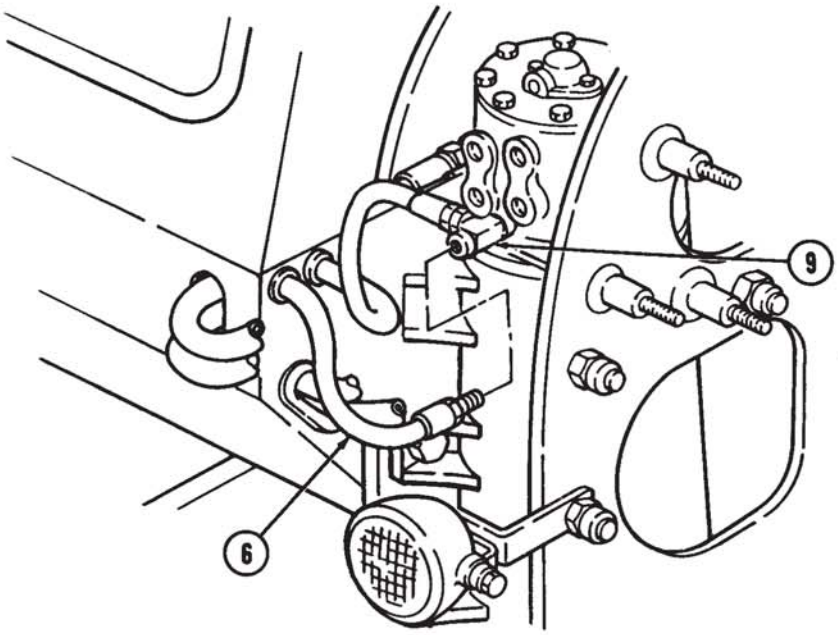

13-45. TRACTOR WRECKER HYDRAULIC LINES REPLACEMENT (Contd)

b. Installation

1. Install bypass hose (6) on elbow (9).
2. Install bypass hose (6) on elbow (5).
3. Install hose (1) on elbow (3).
4. Install hose (2) on checkvalve (4).
5. Connect hoses (1) and (2) to tubes (7) and (8).

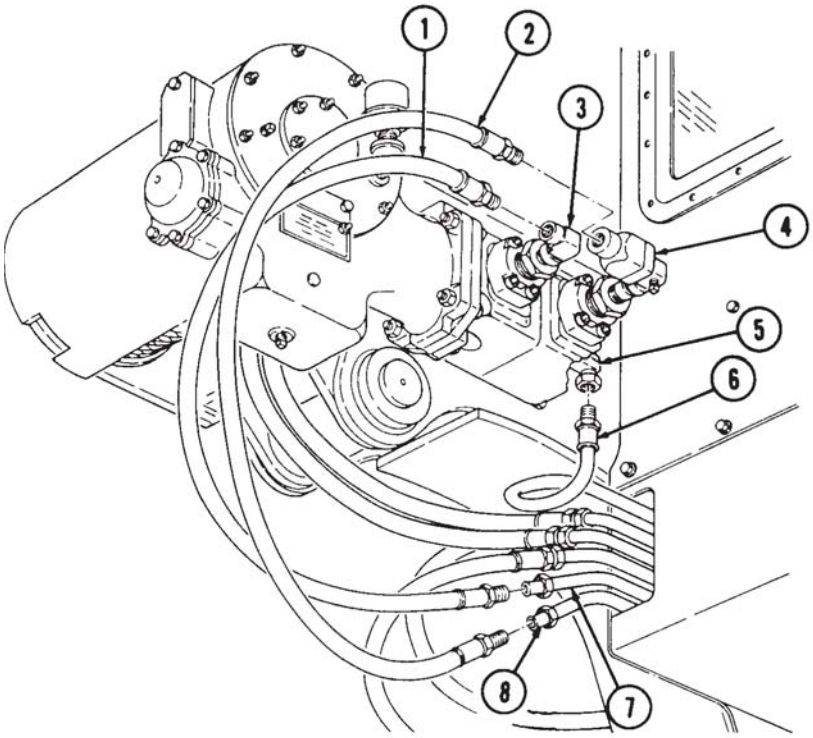

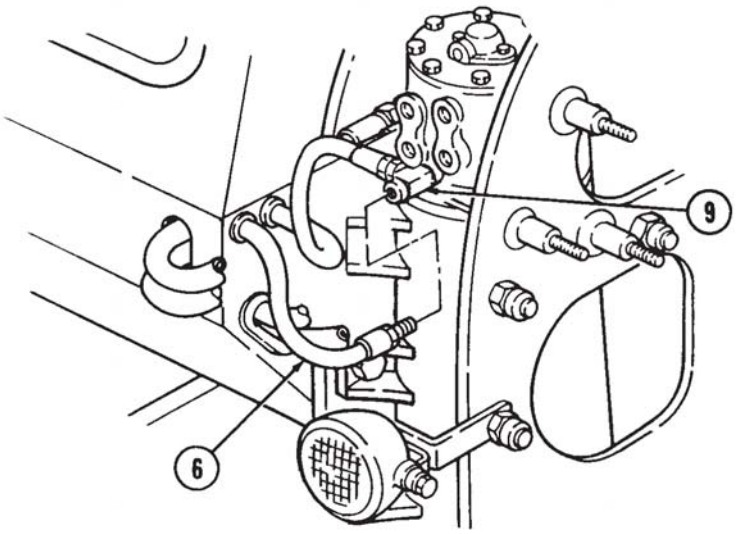

FOLLOW-ON TASKS: • Fill hydraulic oil tank (LO 9-2320-260-12).
• Operate hoist winch (TM 9-2320-260-10) and check for leaks.

13-46. TRACTOR WRECKER HYDRAULIC PUMP PROPELLER SHAFT MAINTENANCE

THIS TASK COVERS:

a Removal
b. Inspection
c. Installation

INITIAL SETUP

APPLICABLE MODELS
M819

MATERIALS/PARTS
Four lockplates

REFERENCES (TM)
TM 9-2320-260-10
TM 9-2320-260-20P

EQUIPMENT CONDITION
Parking brake set (TM 9-2320-260-10).

a. Removal

1. Bend tabs on four lockplates (2) and remove eight screws (1) from two U-joints (4) and flanges (3). Discard lockplates (2).
2. Remove two U-joints (4) and propeller shaft (5) from two flanges (3).

b. Inspection

Inspect universal joints (3) for looseness or roughness. Replace universal joints (3) if damaged (para. 7-5).

c. Installation

1. Position propeller shaft (5) with two U-joints (4) on flanges (3).
2. Install two U-joints (4) on flanges (3) with four new lockplates (2) and eight screws (1).
3. Bend tabs on four lockplates (2) against eight screws (1).

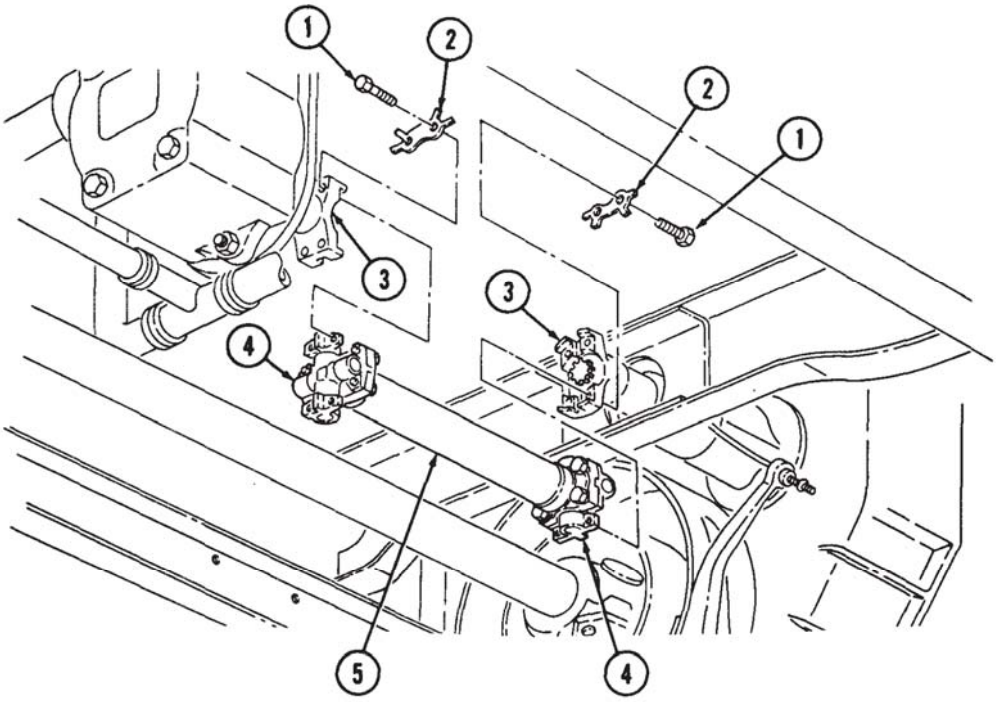

13-47. VAN LIFTGATE CONTROLS MAINTENANCE

THIS TASK COVERS:

a. Removal
b. Disassembly
c. Inspection
d. Assembly
e. Installation

INITIAL SETUP

APPLICABLE MODELS
M820A2

MATERIALS/PARTS
Four lockwashers
Two cotter pins

REFERENCES (TM)
TM 9-2320-260-10
TM 9-2320-260-20P

EQUIPMENT CONDITION
- Parking brake set (TM 9-2320-260-10).
- Van liftgate safety latch removed (para. 13-48).

NOTE

The left and right side control levera are replaced the same way. This procedure covers the left side only.

a. Removal

Remove two cotter pins (1), retaining pin (2), and control rod (4) from frame bracket (3). Discard cotter pins (1).

b. Disassembly

1. Remove jamnut (5), nut (6), bracket (7), spring (8), nut (9), and jamnut (10) from rod (11).
2. Remove lubrication fitting (12) from bracket (7).
3. Remove jamnut (19), nut (18), tubescrew (17), spring (16), nut (15), and jamnut (14) from rod (13).

c. Inspection

1. Inspect rods (11) and (13) for cracks, breaks, and twists. Replace rod (11) or (13) if damaged.
2. Inspect springs (8) and (16) for distortion and warping. Replace spring (8) or (16) if damaged.

d. Assembly

1. Install jamnut (14), nut (15), spring (16), tubescrew (17), nut (18), and jamnut (19) on rod (13).
2. Install grease fitting (12) on bracket (7).
3. Install jamnut (10), nut (9), spring (8), bracket (7), nut (6), and jamnut (5) on rod (11).

e. Installation

Install control rod (4) on frame bracket (3) with retaining pin (2) and two new cotter pins (1).

13-47. VAN LIFTGATE CONTROLS MAINTENANCE (Contd)

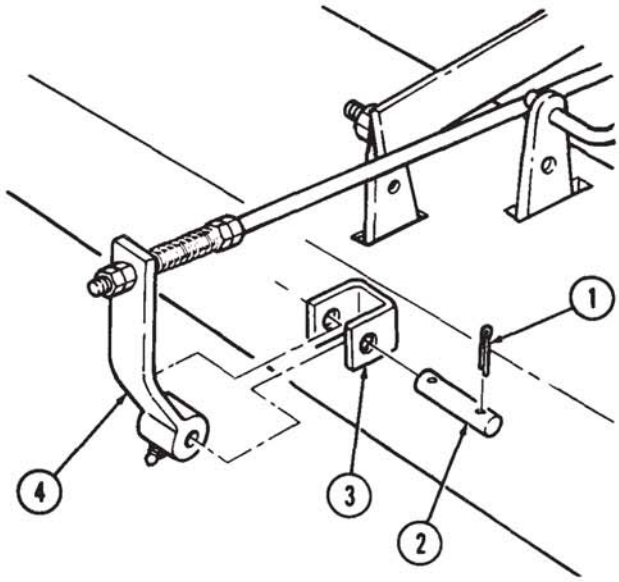

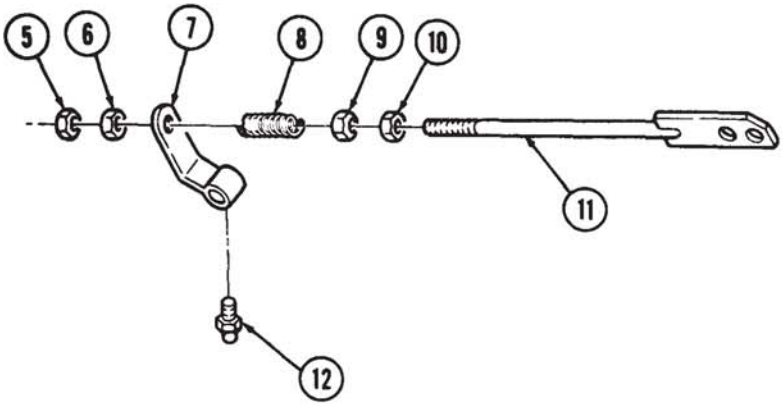

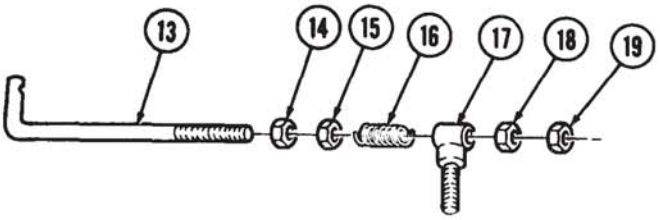

FOLLOW-ON TASK: Install van liftgate safety latch (para. 13-48).

13-48. VAN LIFTGATE SAFETY LATCH REPLACEMENT

THIS TASK COVERS:

a. Removal **b. Installation**

INITIAL SETUP

APPLICABLE MODELS
M820A2

MATERIALS/PARTS
Cotter pin

REFERENCES (TM)
TM 9-2320-260-10
TM 9-2320-260-20P

EQUIPMENT CONDITION
- Parking brake set (TM 9-2320-260-10).
- Liftgate lowered to ground level (TM 9-2320-260-10).

a. Removal

NOTE

The left and right latches are replaced the same way. This procedure covers the left side only.

1. Remove cotter pin (3) from control lever (5). Discard cotter pin (3).
2. Remove two snaprings (4) from retaining pin (10).
3. Remove retaining pin (10) and two spacers (2) from safety latch (1).
4. Remove jamnut (8), nut (7), washer (6), and control lever (5) from angle linkage (9).
5. Remove safety latch (1) from control lever (5).

b. Installation

1. Position safety latch (1) on control lever (5).
2. Install control lever (5) on angle linkage (9) with washer (6), nut (7), and jamnut (8).
3. Install retaining pin (10) on safety latch (1) with two spacers (2) and snaprings (4).
4. Install new cotter pin (3) on control lever (5).

13-48. VAN LIFTGATE SAFETY LATCH REPLACEMENT (Contd)

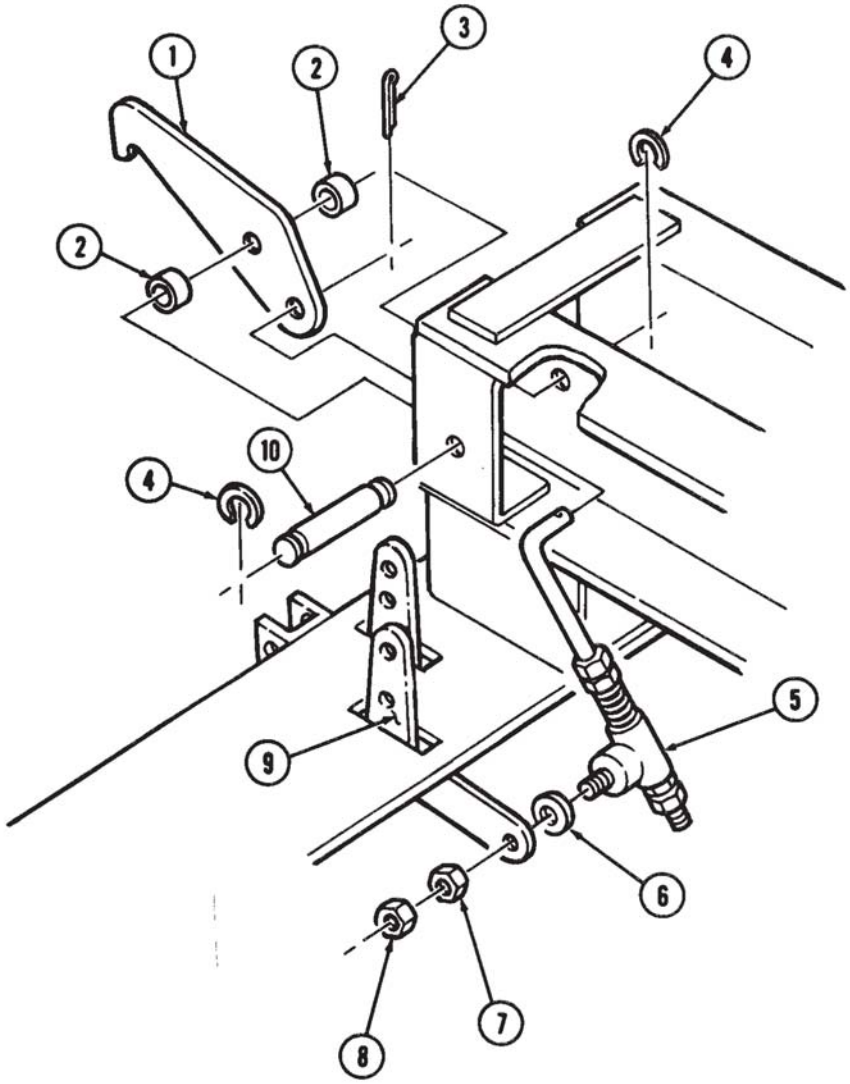

FOLLOW-ON TASK: Raise liftgate (TM 9-2320-260-10).

13-49. VAN LIFTGATE OIL TANK REPLACEMENT

THIS TASK COVERS:

a. Removal

b. Installation

INITIAL SETUP

APPLICABLE MODELS

M820A2

MATERIALS/PARTS

Two lockwashers
Cap and plug set (Appendix C, Item 9)
Antiseize tape (Appendix C, Item 30)

REFERENCES (TM)

LO 9-2320-260-12
TM 9-2320-260-10
TM 9-2320-260-20P

EQUIPMENT CONDITION

- Parking brake set (TM 9-2320-260-10).
- Drain hydraulic system (LO 9-2320-260-12).

CAUTION

- Clean area around hoses and lines before removal to prevent entry of dirt. Damage will occur if dirt or dust enters system.
- Cap or plug all openings immediately after disconnecting lines and hoses to prevent contamination. Remove caps or plugs prior to installation. Failure to do so may result in damage to equipment

NOTE

Tag all lines and hoses for installation.

a. Removal

1. Remove hydraulic hose (3) from adapter (4).
2. Remove hydraulic hose (11) from adapter (10).
3. Remove hydraulic hose (9) from elbow (8).
4. Remove two nuts (7), screws (1), lockwashers (2), brackets (12), and oil tank (5) from frame (6). Discard lockwashers (2).
5. Remove adapter (4) and elbow (18) from oil tank (5).
6. Remove elbow (8), adapters (10) and (16), and tee (17) from oil tank (5).
7. Remove breather cap (14), bushing (13), and plug (15) from oil tank (5).

b. Installation

1. Wrap male threads on adapters (4), (10), and (16), hydraulic hoses (3), (9), and (11), tee (17), and elbows (8) and (18) with antiseize tape.
2. Install bushing (13), breather cap (14), and plug (15) on oil tank (5).
3. Install elbow (8), adapters (10) and (16), and tee (17) on oil tank (5).
4. Install elbow (18) and adapter (4) on oil tank (5).
5. Install oil tank (5) on frame (6) with two brackets (12), screws (1), new lockwashers (2), and nuts (7).
6. Install hydraulic hose (3) on adapter (4).
7. Install hydraulic hose (11) on adapter (10).
8. Install hydraulic hose (9) on elbow (8).

13-49. VAN LIFTGATE OIL TANK REPLACEMENT (Contd)

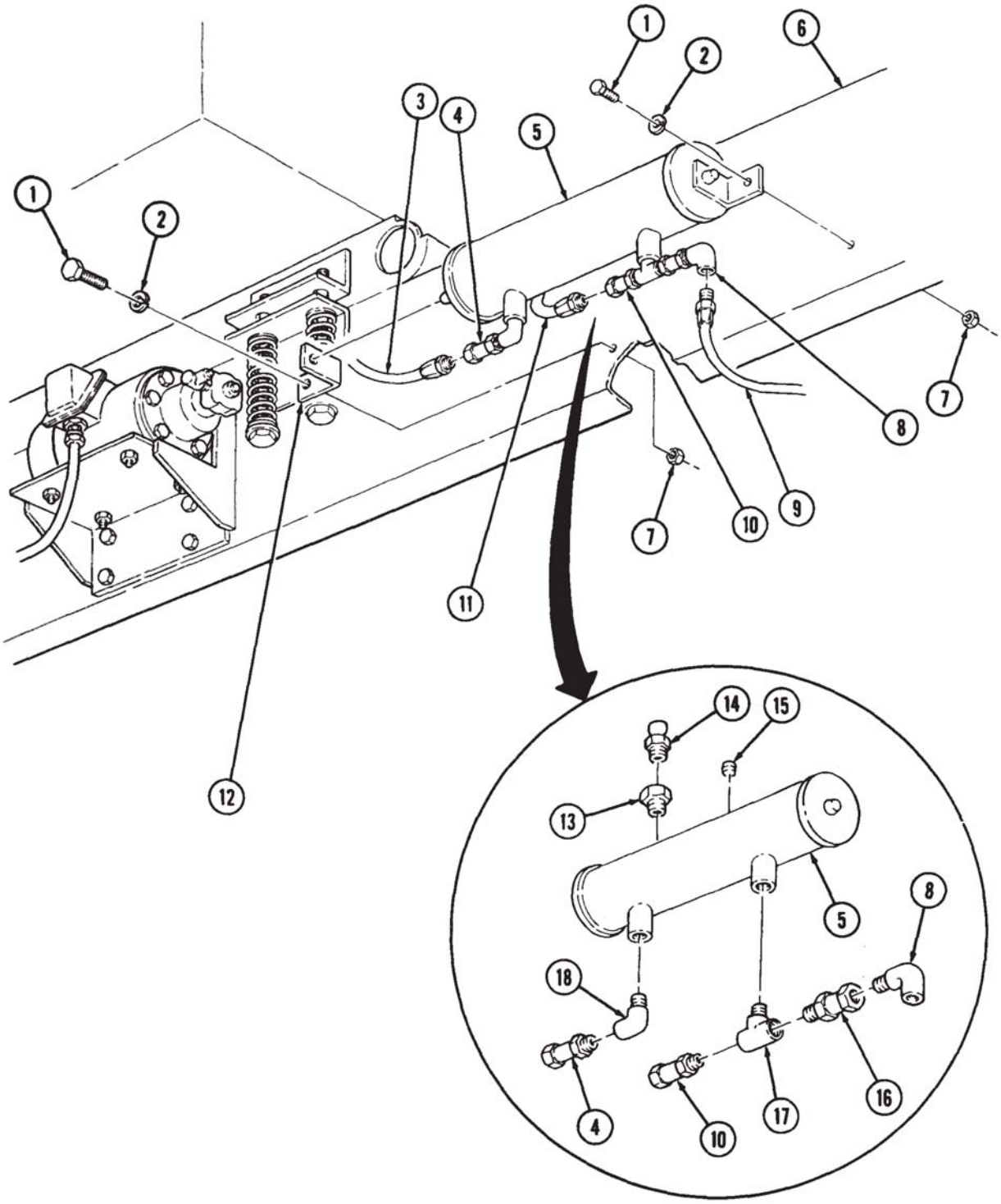

FOLLOW-ON TASKS: • Fill oil tank (LO 9-2320-260-12)
• Operate liftgate (TM 9-2320-260-10) and check for leaks.

13-50. VAN LIFTGATE PUMP MOTOR REPLACEMENT

THIS TASK COVERS:

a. Removal **b. Installation**

INITIAL SETUP

APPLICABLE MODELS
M820A2

MATERIALS/PARTS
Six lockwashers
Cap and plug set (Appendix C, Item 9)
Antiseize tape (Appendix C, Item 30)

PERSONNEL REQUIRED
Two

REFERENCES (TM)
LO 9-2320-260-12
TM 9-2320-260-10
TM 9-2320-260-20P

EQUIPMENT CONDITION
- Parking brake set (TM 9-2320-260-10).
- Van liftgate pump propeller shaft removed (para. 13-53).
- Drain hydraulic system (LO 9-2320-260-12).

CAUTION

- Clean area around hoses and lines before removal to prevent entry of dirt. Damage will occur if dirt or dust enters system.
- Cap or plug all openings immediately after disconnecting lines and hoses to prevent contamination. Remove caps or plugs prior to installation. Failure to do so may result in damage to equipment.

NOTE

- Tag all hoses and lines for installation.
- Assistant will hold hydraulic pump during removal and installation.

a. Removal

1. Remove hydraulic hose (11) from tee (14).
2. Remove hydraulic hose (8) from reducer (9).
3. Remove hydraulic hose (12) from elbow (10).
4. Remove two nuts (3), lockwashers (4), screws (13), and hydraulic pump (15) from bracket (5). Discard lockwashers (4).
5. Remove four nuts (7), lockwashers (6), screws (2), and bracket (5) from frame (1). Discard lockwashers (6).

NOTE

Perform steps 6 and 7 if replacing hydraulic pump.

6. Remove reducer (9), checkvalve (17), connector (18), tee (14), checkvalve (19), connector (20), bushing (21), and elbow (16) from hydraulic pump (15).
7. Remove elbow (10) from hydraulic pump (15).

b. Installation

NOTE

Perform steps 1 through 3 if installing new hydraulic pump.

1. Install elbow (10) on hydraulic pump (15).

13-50. VAN LIFTGATE PUMP MOTOR REPLACEMENT (Contd)

2. Wrap threads of elbow (10), elbow (16), bushing (21), connector (20), tee (14), connector (18), reducer (9), and hydraulic hoses (8), (11), and (12) with antiseize tape.
3. Install elbow (16), bushing (21), connector (20), checkvalve (19), tee (14), connector (18), checkvalve (17), and reducer (9) on hydraulic pump (15).
4. Install bracket (5) on frame (1) with four screws (2), new lockwashers (6), and nuts (7).
5. Install hydraulic pump (15) on bracket (5) with two screws (13), new lockwashers (4), and nuts (3).
6. Install hydraulic hose (12) on elbow (10).
7. Install **hydraulic hose (8) on reducer (9).**
8. Install **hydraulic hose (11) on tee (14).**

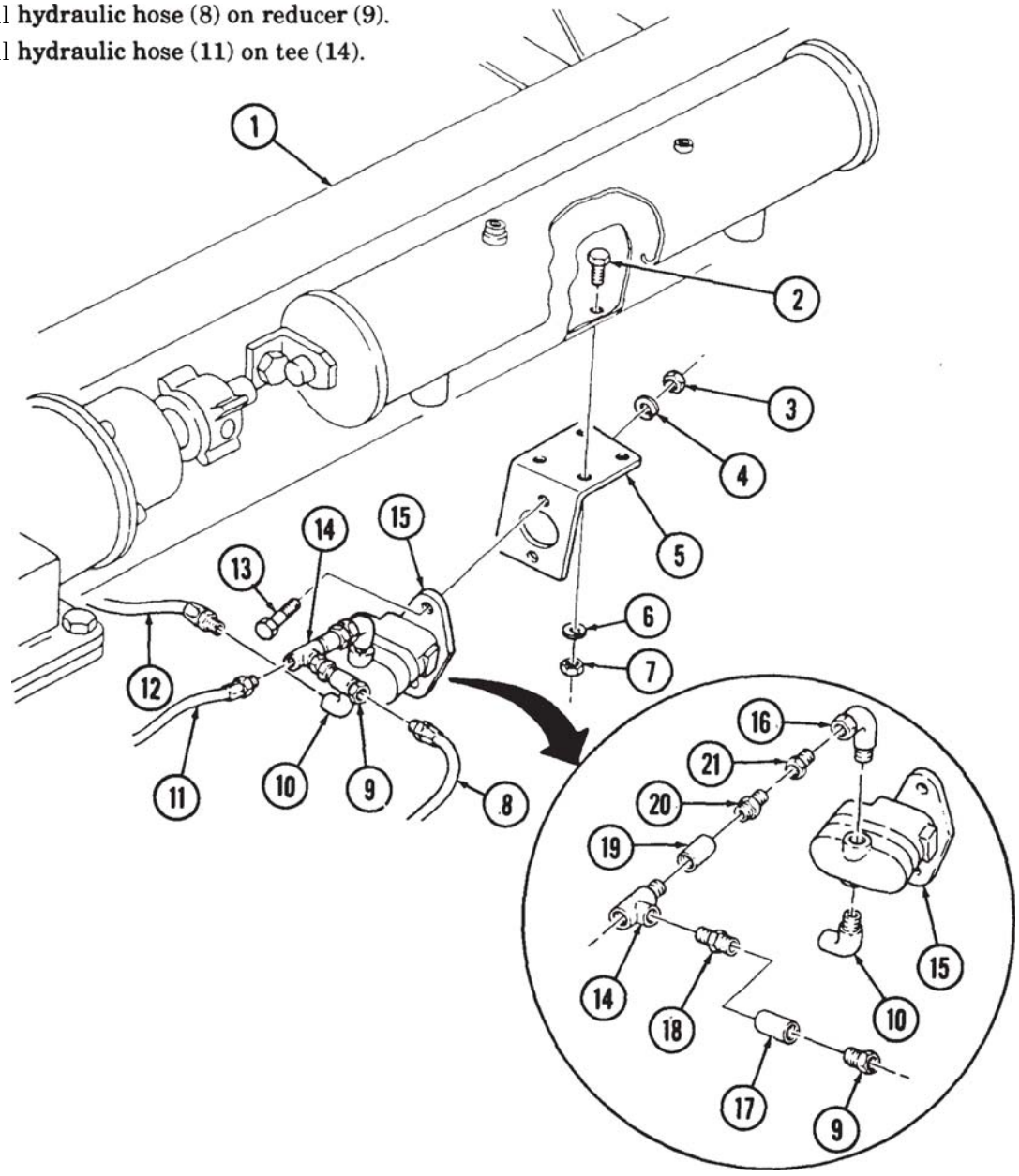

FOLLOW-ON TASKS: • Fill oil tank (LO 9-2320-260-12).
• Install van liftgate pump propeller shaft (para. 13-53).
• Operate liftgate (TM 9-2320-260-10) and check for leaks.

13-51. VAN LIFTGATE CONTROL LINKAGE MAINTENANCE

THIS TASK COVERS:

a. Removal
b. Disassembly
c. Inspection
d. Assembly
e. Installation

INITIAL SETUP

APPLICABLE MODELS
M820A2

MATERIALS/PARTS
Four lockwashers
Two cotter pins

REFERENCES (TM)
TM 9-2320-260-10
TM 9-2320-260-20P

EQUIPMENT CONDITION
Parking brake set (TM 9-2320-260-10).

a. Removal

1. Remove cotter pin (8) and control rod (10) from lever (9). Discard cotter pin (8).
2. Remove four nuts (1), lockwashers (2), screws (4), and control lever assembly (3) from frame (5). Discard lockwashers (2).

b. Disassembly

1. Remove cotter pin (11), clevis pin (12), and control rod (10) from lever (14). Discard cotter pin (11).
2. Remove two grease fittings (13) from brackets (6).

c. Inspection

1. Inspect control rod (10) for cracks, breaks, and twists. Replace control rod (10) if damaged.
2. Inspect control lever assembly (3) for cracks, breaks, and bends. Replace control lever assembly (3) if damaged.
3. Inspect control lever (7) for cracks, breaks, and twists. Replace control lever (7) if damaged.

d. Assembly

1. Install two grease fittings (13) in brackets (6).
2. Install control rod (10) on lever (14) with clevis pin (12) and new cotter pin (11).

e. Installation

1. Install control lever assembly (3) on frame (5) with four screws (4), new lockwashers (2), and nuts (1).
2. Install control rod (10) on lever (9) with new cotter pin (8).

13-51. VAN LIFTGATE CONTROL LINKAGE MAINTENANCE (Contd)

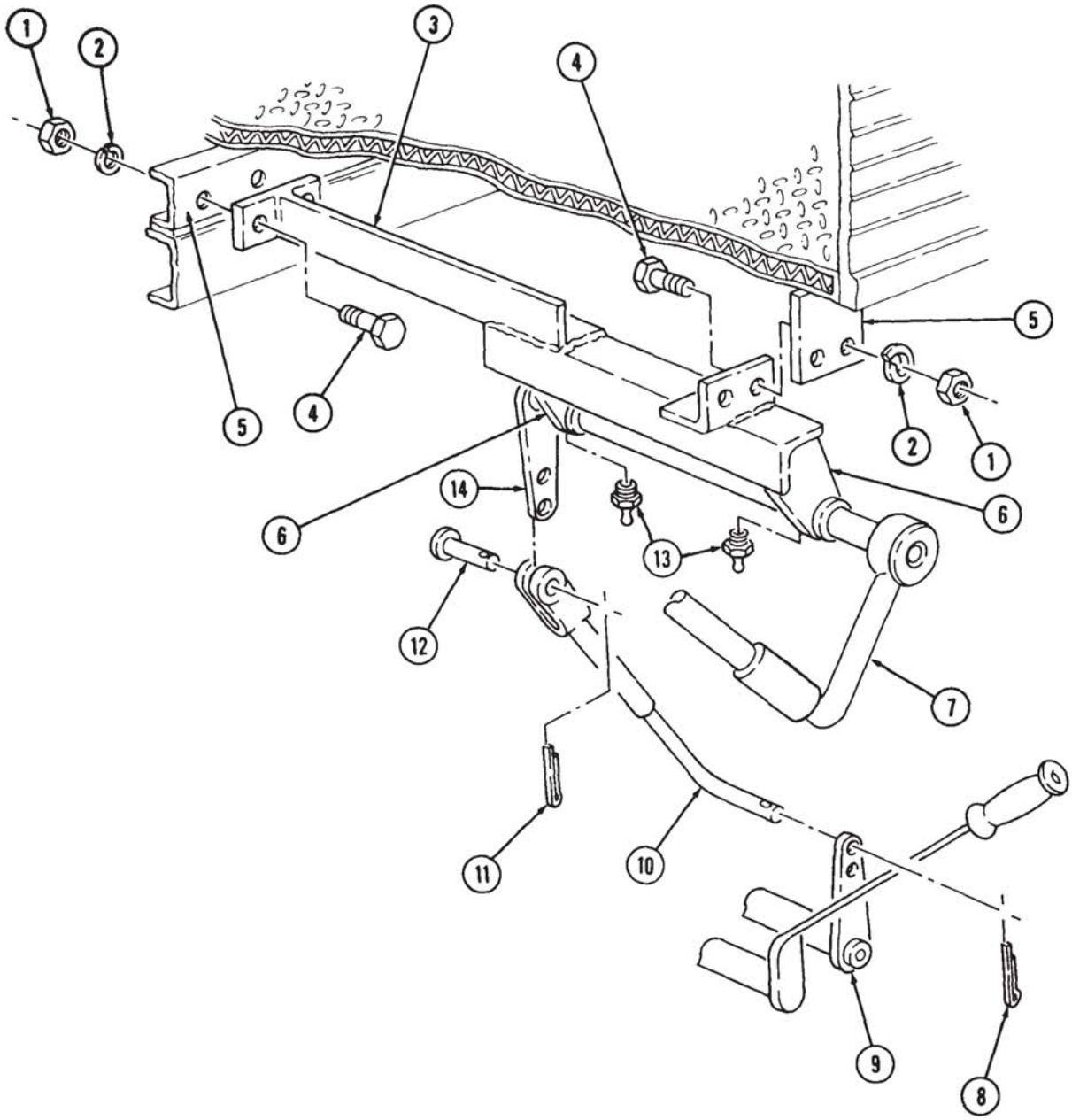

13-52. VAN LIFTGATE CONTROL VALVE REPLACEMENT

THIS TASK COVERS:

a. Removal **b. Installation**

INITIAL SETUP

APPLICABLE MODELS
M820A2

MATERIALS/PARTS
Three lockwashers
Cap and plug set (Appendix C, Item 9)
Antiseize tape (Appendix C, Item 30)

REFERENCES (TM)
LO 9-2320-260-12
TM 9-2320-260-10
TM 9-2320-260-20P

EQUIPMENT CONDITION
- Parking brake set (TM 9-2320-260-10).
- Liftgate lowered to ground level (TM 9-2320-260-10).
- Control linkage removed from control valve (para. 13-51).
- Drain hydraulic system (LO 9-2320-260-12).

a. Removal

CAUTION

- Clean area around hoses and lines before removal to prevent entry of dirt. Damage will occur if dirt or dust enters system.
- Cap or plug all openings immediately after disconnecting lines and hoses to prevent contamination. Remove caps and plugs prior to installation. Failure to do so may result in damage to equipment.

NOTE

- Tag all hydraulic lines for installation.
- Have drainage container ready to catch hydraulic oil.

1. Disconnect hydraulic hoses (13) and (17) from control valve (3).
2. Disconnect hydraulic hoses (15) and (16) from two connectors (14).
3. Disconnect hydraulic hoses (11) and (12) from two tees (10).
4. Remove three nuts (9), screws (1), lockwashers (2), and control valve (3) from main frame mount (4). Discard lockwashers (2).
5. Disconnect hydraulic hoses (5) and (7) from adapter (6) and tee (8).

NOTE

Perform steps 6 through 8 if replacing control valve.

6. Remove two connectors (14), flow control valve (23), and nipple (22) from two tees (10).
7. Remove two tees (10) and nipples (21) from control valve (3).
8. Remove adapter (6), tee (8), nipple (20), and elbows (18) and (19) from control valve (3).

b. Installation

NOTE

Perform steps 1 through 4 if installing new control valve.

1. Wrap male threads on hydraulic hoses (5), (7), (11), (12), (13), and (17), two connectors (14), nipples (20), (21), and (22), adapter (6), and elbows (18) and (19) with antiseize tape.
2. Install elbows (18) and (19), nipple (20), tee (8), and adapter (6) on control valve (3).
3. Install two nipples (21) and tees (10) on control valve (3).

13-52. VAN LIFTGATE CONTROL VALVE REPLACEMENT (Contd)

4. Install nipple (22), flow control valve (23), and two connectors (14) on tees (10).
5. Install control valve (3) on main frame mount (4) with three new lockwashers (2), screws (1), and nuts (9).
6. Connect hydraulic hoses (7) and (5) to tee (8) and adapter (6).
7. Connect hydraulic hoses (11) and (12) to two tees (10).
8. Connect hydraulic hoses (15) and (16) to two connectors (14).
9. Connect hydraulic hoses (13) and (17) to control valve (3).

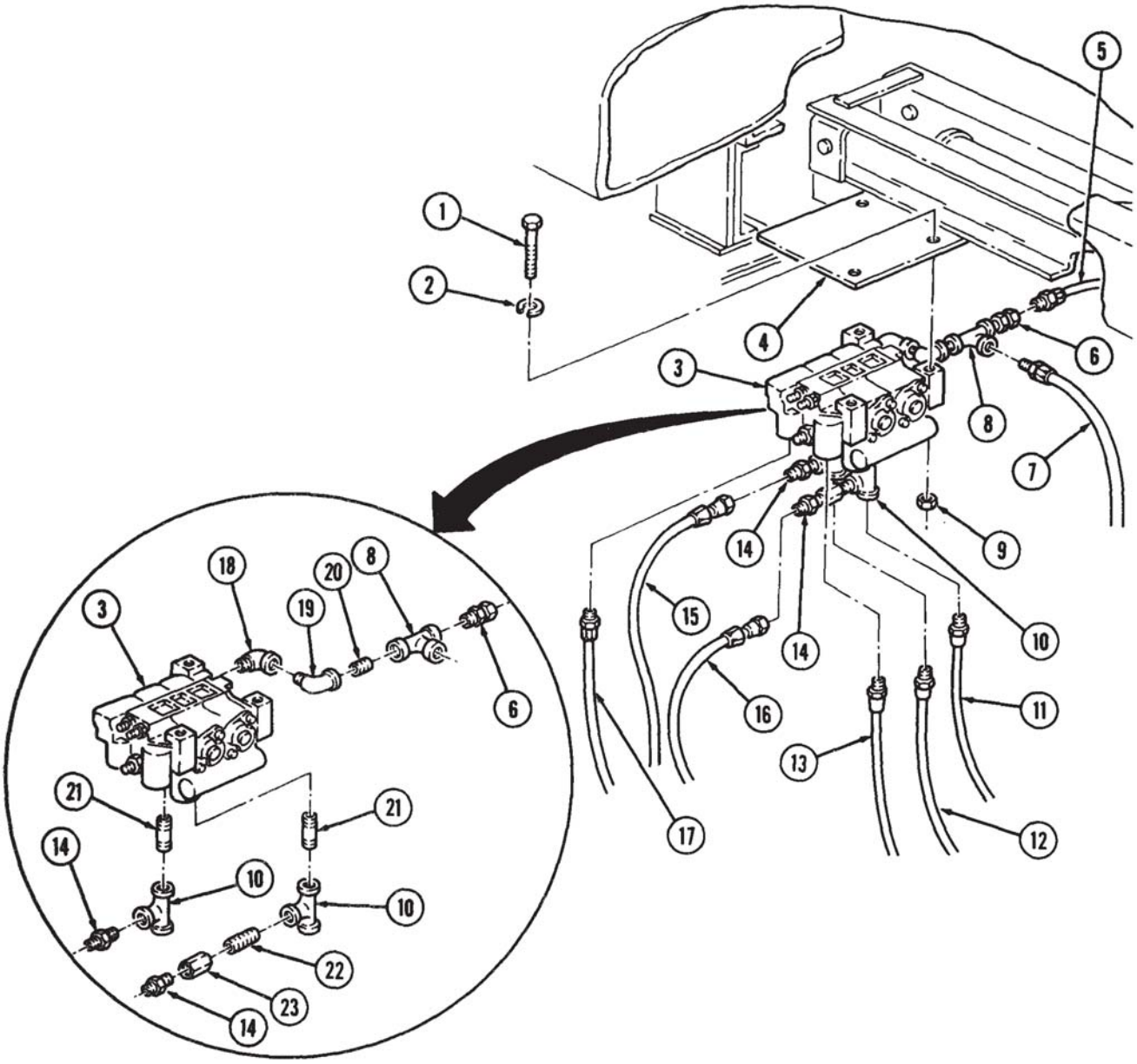

FOLLOW-ON TASKS:
- Fill hydraulic system (LO 9-2320-260-12).
- Install control linkage on control valve (para. 13-51).
- Operate liftgate (TM 9-2320-260-10) and check for leaks.

13-53. VAN LIFTGATE PUMP PROPELLER SHAFT REPLACEMENT

THIS TASK COVERS:

a. Removal **b. Installation**

INITIAL SETUP

APPLICABLE MODELS
M820K2

MATERIALS/PARTS
Two woodruff keys

REFERENCES (TM)
TM 9-2320-260-10
TM 9-2320-260-20P

EQUIPMENT CONDITION
Parking brake set (TM 9-2320-260-10).

a. Removal

1. Remove setscrew (7) from collar (1).
2. Slide collar (1) away from shaft (2).
3. Remove setscrews (6) and (8) from yokes (3) and (9).
4. Remove yoke (3) and shaft (2) from PTO shaft (4).
5. Remove yoke (9) from hydraulic pump (11).
6. Remove woodruff key (5) from PTO shaft (4). Discard woodruff key (5).
7. Remove woodruff key (10) from hydraulic pump (11). Discard woodruff key (10).
8. For U-joint repair, refer to U-joint replacement (para. 7-5).

b. Installation

1. Install new woodruff key (10) on hydraulic pump (11).
2. Install new woodruff key (5) on PTO shaft (4).
3. Install yoke (9) on hydraulic pump (11).
4. Install yoke (3) and shaft (2) on PTO shaft (4).
5. Install setscrews (6) and (8) on yokes (3) and (9).
6. Slide collar (1) until 3/4 in. (19.05 mm) from shaft (2).
7. Install setscrew (7) in collar (1).

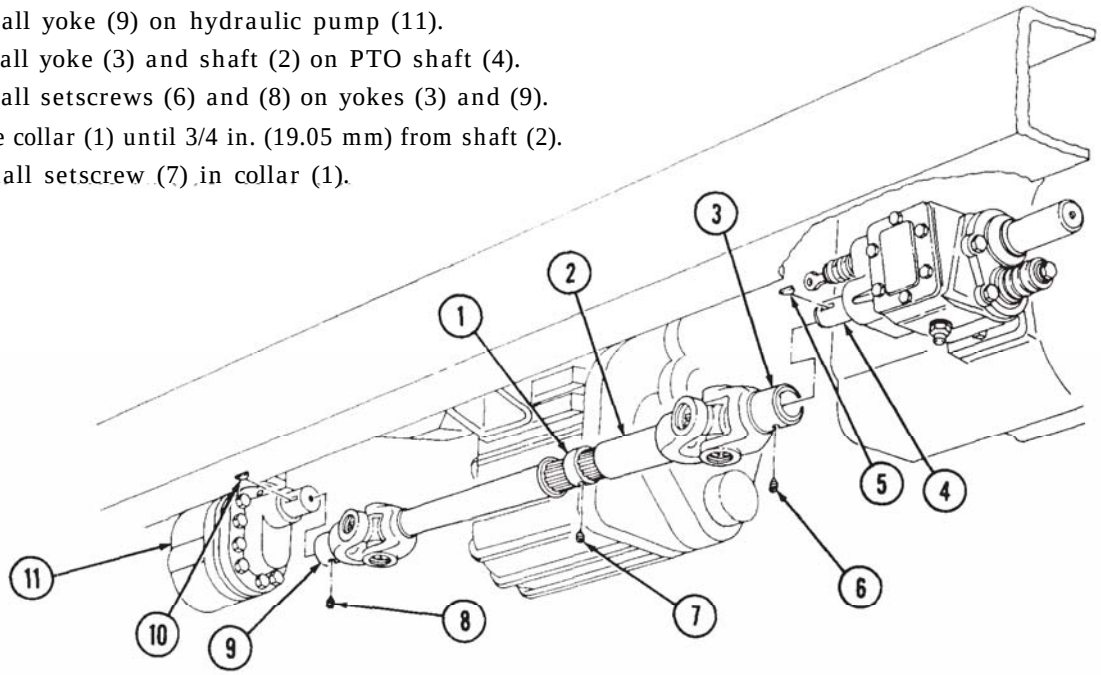

Section II. POWER DIVIDER MAINTENANCE

13-54. POWER DIVIDER MAINTENANCE INDEX

PARA. NO.	TITLE	PAGE NO.
13-55.	Power Divider Control Lever and Linkage Replacement	13-123
13-56.	Power Divider-to-Transfer Propeller Shaft Maintenance	13-126
13-57.	Power Divider-to-Rear Winch Drive Propeller Shaft Replacement	13-128
13-58.	Power Divider-to-Hydraulic Pump Propeller Shaft Replacement	13-130
13-59.	Power Divider Yoke and Seal Replacement	13-132

13-55. POWER DIVIDER CONTROL LEVER AND LINKAGE REPLACEMENT

TH1S TASK COVERS:

a. Removal **b. Installation**

INITIAL SETUP

APPLICABLE MODELS
M816, M819

MATERIALS/PARTS
Eight locknuts
Four cotter pins
Woodruff key

REFERENCES (TM)
TM 9-2320-260-10
TM 9-2320-260-20P

EQUIPMENT CONDITION
- Parking brake set (TM 9-2320-260-10).
- Driver's seat removed (para. 11-32).

13-55. POWER DIVIDER CONTROL LEVER AND LINKAGE REPLACEMENT (Contd)

a. Removal

1. Remove cotter pin (12), clevis pin (23), and clevis end (13) from power divider arm (10). Discard cotter pin (12).
2. Remove cotter pin (15), clevis pin (25), and rod (14) from lever (16). Discard cotter pin (15).
3. Remove cotter pin (18), clevis pin (6), and clevis end (5) from lever (7). Discard cotter pin (18).
4. Remove cotter pin (1), clevis pin (3), and rod (2) from lever (17). Discard cotter pin (1).
5. Remove two locknuts (11), screws (22), and bracket (20) from crossmember (9). Discard locknuts (11).
6. Remove two pins (8) and levers (7) and (16) from shaft (21).
7. Remove shaft (21) and grease fitting (19) from bracket (20).
8. Loosen jamnut (4) and remove clevis end (5) and jamnut (4) from rod (2).
9. Loosen jamnut (24) and remove clevis end (13) and jam nut (24) from rod (14).
10. Bend four tabs (41) up and remove boot (26) from floor (36).
11. Remove four locknuts (37), screws (38), and two brackets (35) from floor (36). Discard locknuts (37).
12. Remove locknut (27), screw (39), and lever (17) from shaft (29). Discard locknut (27).
13. Remove woodruff key (28) and two brackets (35) from shaft (29). Discard woodruff key (28).
14. Remove locknut (34), washer (33), spring (32), and lock (30) from lever (31). Discard locknut (34).
15. Remove two grease fittings (40) from brackets (35).

b. Installation

1. Install two grease fittings (40) on brackets (35).
2. Install lock (30) and spring (32) on lever (31) with washer (33) and new locknut (34).
3. Position two brackets (35) and new woodruff key (28) on shaft (29).
4. Install lever (17) on shaft (29) with screw (39) and new locknut (28).
5. Install two brackets (35) on floor (36) with four screws (38) and new locknuts (37).
6. Install boot (26) on floor (36) and bend four tabs (41) down.
7. Install jamnut (24) and clevis end (13) on rod (14).
8. Install jamnut (4) and clevis end (5) on rod (2).
9. Install grease fitting (19) on bracket (20).
10. Position shaft (21) in bracket (20).
11. Install two levers (7) and (16) on shaft (21) with two pins (8).
12. Install bracket (20) on crossmember (9) with two screws (22) and new locknuts (11).
13. Install rod (2) on lever (17) with clevis pin (3) and new cotter pin (1).
14. Install clevis end (5) on lever (7) with clevis pin (6) and new cotter pin (18).
15. Install rod (14) on lever (16) with clevis pin (25) and new cotter pin (15).
16. Install clevis end (13) on power divider arm (10) with clevis pin (23) and new cotter pin (12).

13-55. POWER DIVIDER CONTROL LEVER AND LINKAGE REPLACEMENT (Contd)

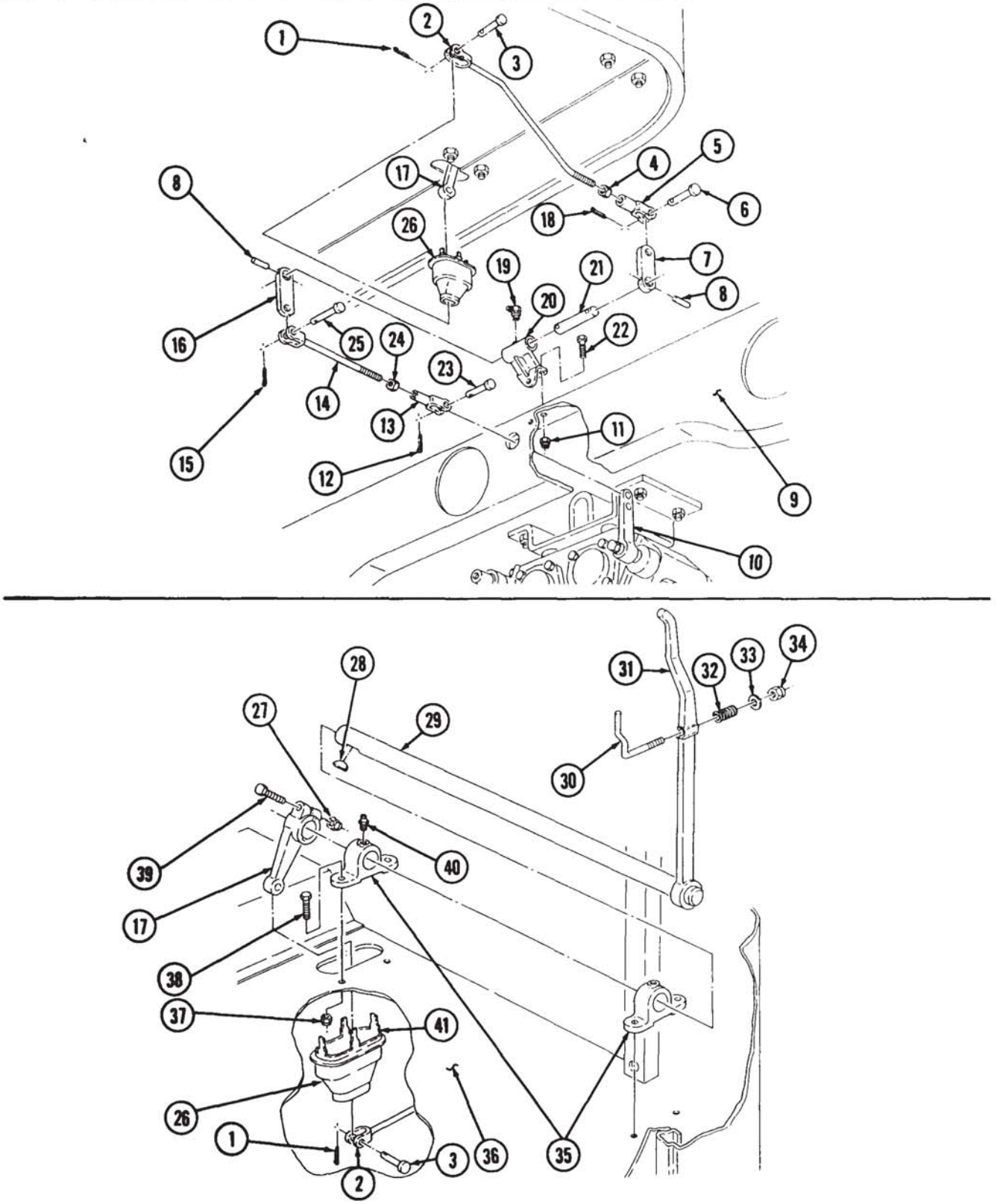

FOLLOW-ON TASK: Install driver's seat (para. 11-32).

13-56. POWER DIVIDER-TO-TRANSFER PROPELLER SHAFT MAINTENANCE

THIS TASK COVERS:

a. Removal
b. Disassembly
c. Inspection
d. Assembly
e. Installation

INITIAL SETUP

APPLICABLE MODELS
M816

MATERIALS/PARTS
Four lockplates
Seal

REFERENCES (TM)
TM 9-2320-260-10
TM 9-2320-260-20P

EQUIPMENT CONDITION
Parking brake set (TM 9-2320-260-10).

a. Removal

1. Bend tabs on four lockplates (2) and remove eight screws (1) and four lockplates (2) from yoke (5), shaft (10), and flanges (3) and (4). Discard lockplates (2).
2. Compress and remove propeller shafts (5) and (10) from power takeoff flange (4) and power divider flange (3).

b. Disassembly

1. Loosen packing retainer (9) and remove shaft (10) from yoke (5).
2. Remove packing retainer (9), split ring (8), seal (7), and split ring (6) from yoke (5). Discard seal (7).

c. Inspection

1. Inspect shaft (10) for bends, cracks, and breaks. Replace shaft (10) if damaged.
2. Inspect universal joint (para. 7-5).
3. Inspect yoke (5) for bends, cracks, and breaks. Replace yoke (5) if darnaged.

d. Assembly

1. Install split ring (6), new seal (7), split ring (8), and packing retainer (9) on yoke (5).
2. Install shaft (10) in yoke (5) and tighten packing retainer (9).

e. Installation

1. Position propeller shaft on power divider flange (3) and power takeoff flange (4).
2. Install four new lockplates (2) on yoke (5), shaft (10), and two flanges (3) and (4) with eight screws (1), and bend tabs on four lockplates (2) over eight screws (1).

13-56. POWER DIVIDER-TO-TRANSFER PROPELLER SHAFT MAINTENANCE (Contd)

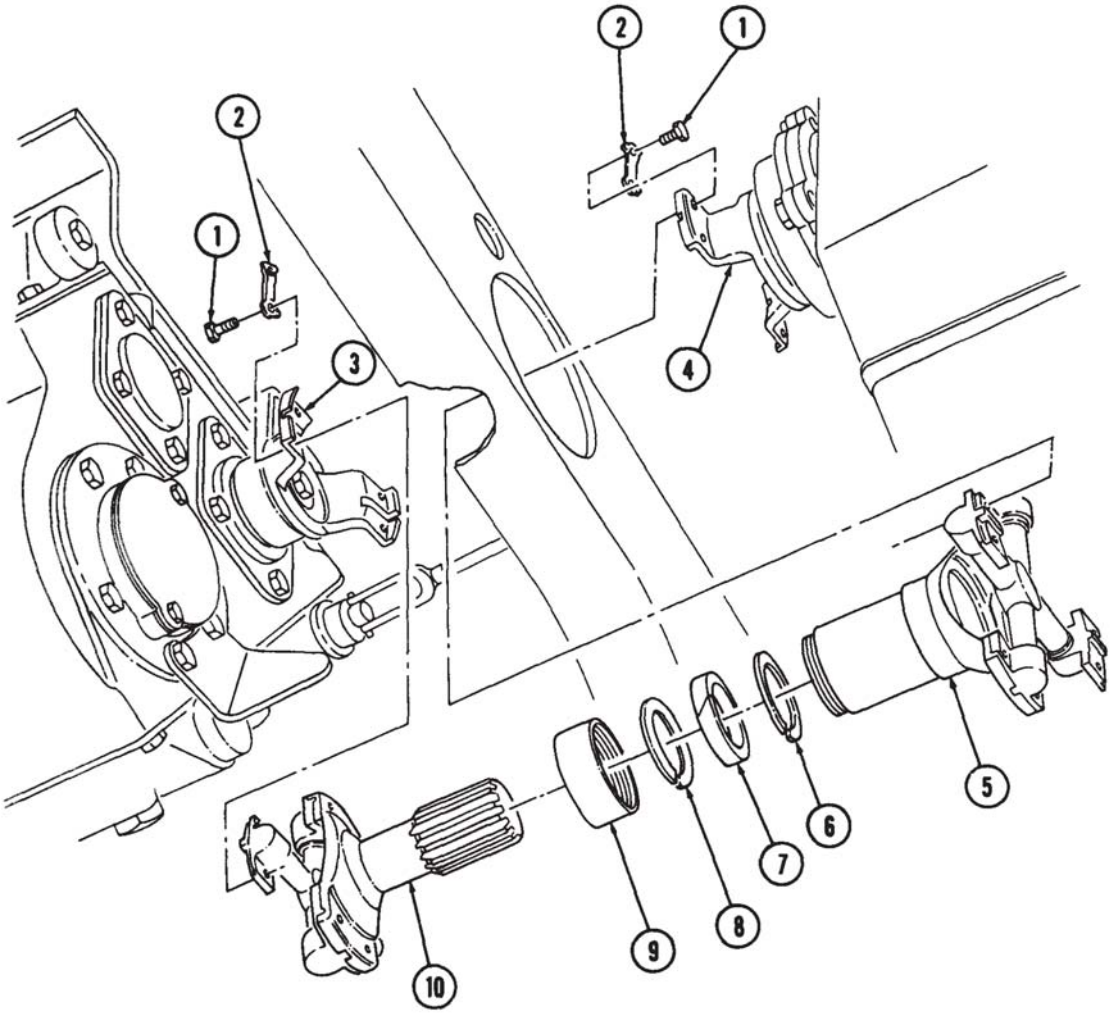

13-57. POWER DIVIDER-TO-REAR WINCH DRIVE PROPELLER SHAFT REPLACEMENT

THIS TASK COVERS:

a. Removal **b. Installation**

INITIAL SETUP

APPLICABLE MODELS
M816

MATERIALS/PARTS
Four lockwashers

REFERENCES (TM)
TM 9-2320-260-10
TM 9-2320-260-20P

EQUIPMENT CONDITION
- Parking brake set (TM 9-2320-260-10).
- Drivechain and sprocket removed (para. 13-17).

a. Removal

1. Remove two nuts (7), screws (1), four lockwashers (2), and plate (4) from roller bracket (3). Discard lockwashers (2).
2. Remove shaft (5) and roller (6) from roller bracket (3).
3. Remove rear winch propeller shaft (8) from yoke (10) and center bearing (9).
4. Guide propeller shaft (8) through rear crossmember 11).

b. Installation

1. Guide propeller shaft (8) through rear crossmember (11).
2. Install rear winch propeller shaft (8) in center bearing (9) and yoke (10).
3. Install roller (6) and shaft (5) on roller bracket (3) with plate (4), four new lockwashers (2), two screws (1), and nuts (7). Tighten nuts (7) 70-98 lb-ft (95-133 N•m).

13-57. POWER DIVIDER-TO-REAR WINCH DRIVE PROPELLER SHAFT REPLACEMENT (Contd)

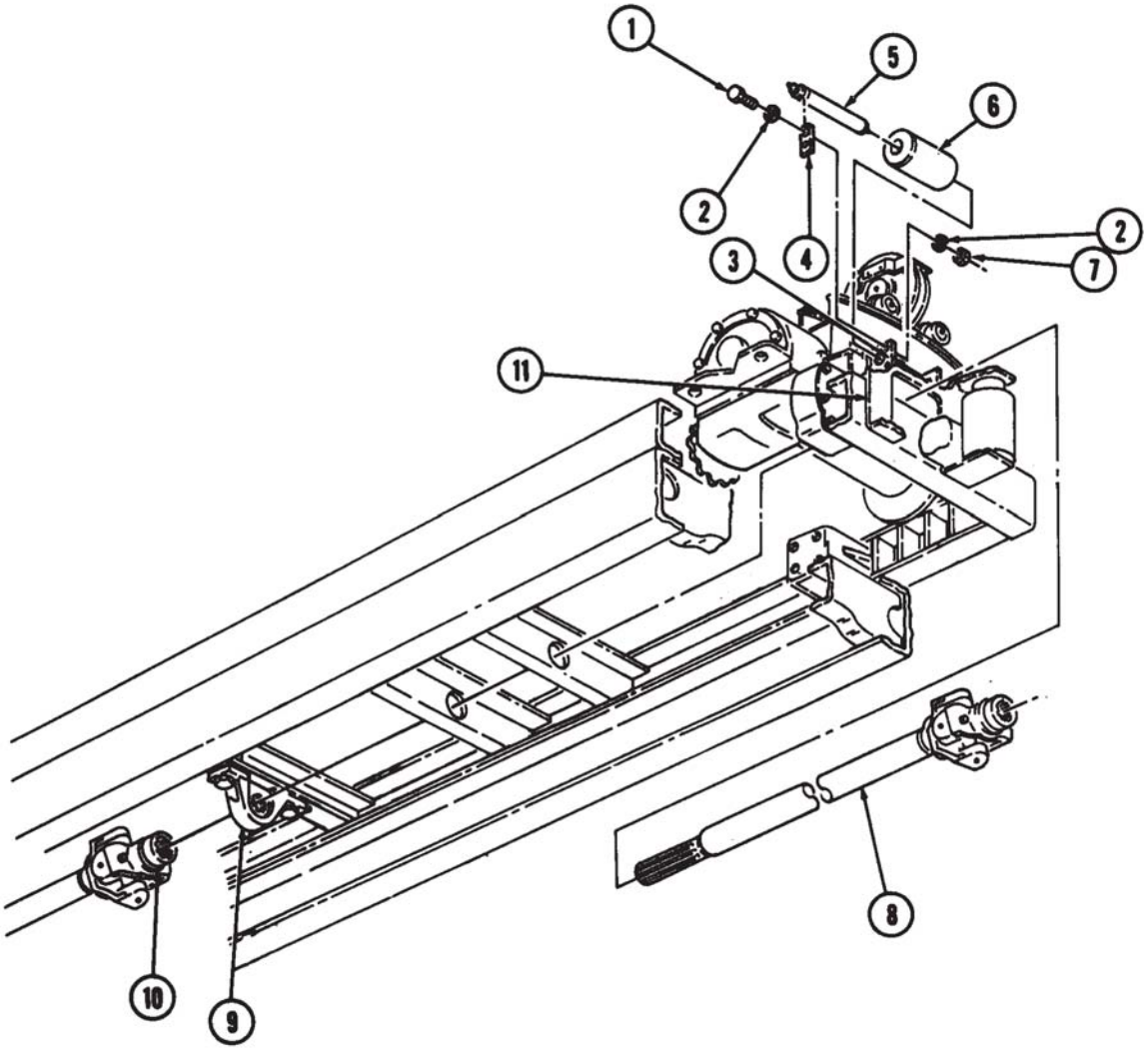

FOLLOW-ON TASK: Install drivechain and sprocket (para. 13-17).

13-58. POWER DIVIDER-TO-HYDRAULIC PUMP PROPELLER SHAFT REPLACEMENT

THIS TASK COVERS:

a. Removal **b. Installation**

INITIAL SETUP

APPLICABLE MODELS
M816

MATERIALS/PARTS
Four locknuts

REFERENCES (TM)
TM 9-2320-260-10
TM 9-2320-260-20P

EQUIPMENT CONDITION
Parking brake set (TM 9-2320-260-10).

a. Removal

1. Loosen two clamps (6) and slide boots (7) and (10) toward middle of propeller shafts (8) and (9).
2. Remove four locknuts (12) and screws (11) from propeller shafts (8) and (9). Discard locknuts (12).
3. Remove propeller shaft (9) from power divider (1).
4. Remove boot (10) from propeller shaft (9).
5. Remove six screws (13), bearing (5), and propeller shaft (8) from bevel gear (2).
6. Remove boot (7) from propeller shaft (8).
7. Remove screw (4), washer (3), and bearing (5) from propeller shaft (8).

b. Installation

1. Install bearing (5) on propeller shaft (8) with washer (3) and screw (4).
2. Install boot (7) on propeller shaft (8).
3. Install bearing (5) and propeller shaft (8) on bevel gear (2) with six screws (13).
4. Install boot (10) on propeller shaft (9).
5. Position propeller shaft (9) on power divider (1).
6. Install propeller shaft (9) on propeller shaft (8) with four screws (11) and new locknuts (12).
7. Position front boot (10) on power divider (1) and rear boot (7) on bevel gear (2).
8. Tighten two clamps (6) on boots (7) and (10).

13-58. POWER DIVIDER-TO-HYDRAULIC PUMP PROPELLER SHAFT REPLACEMENT (Contd)

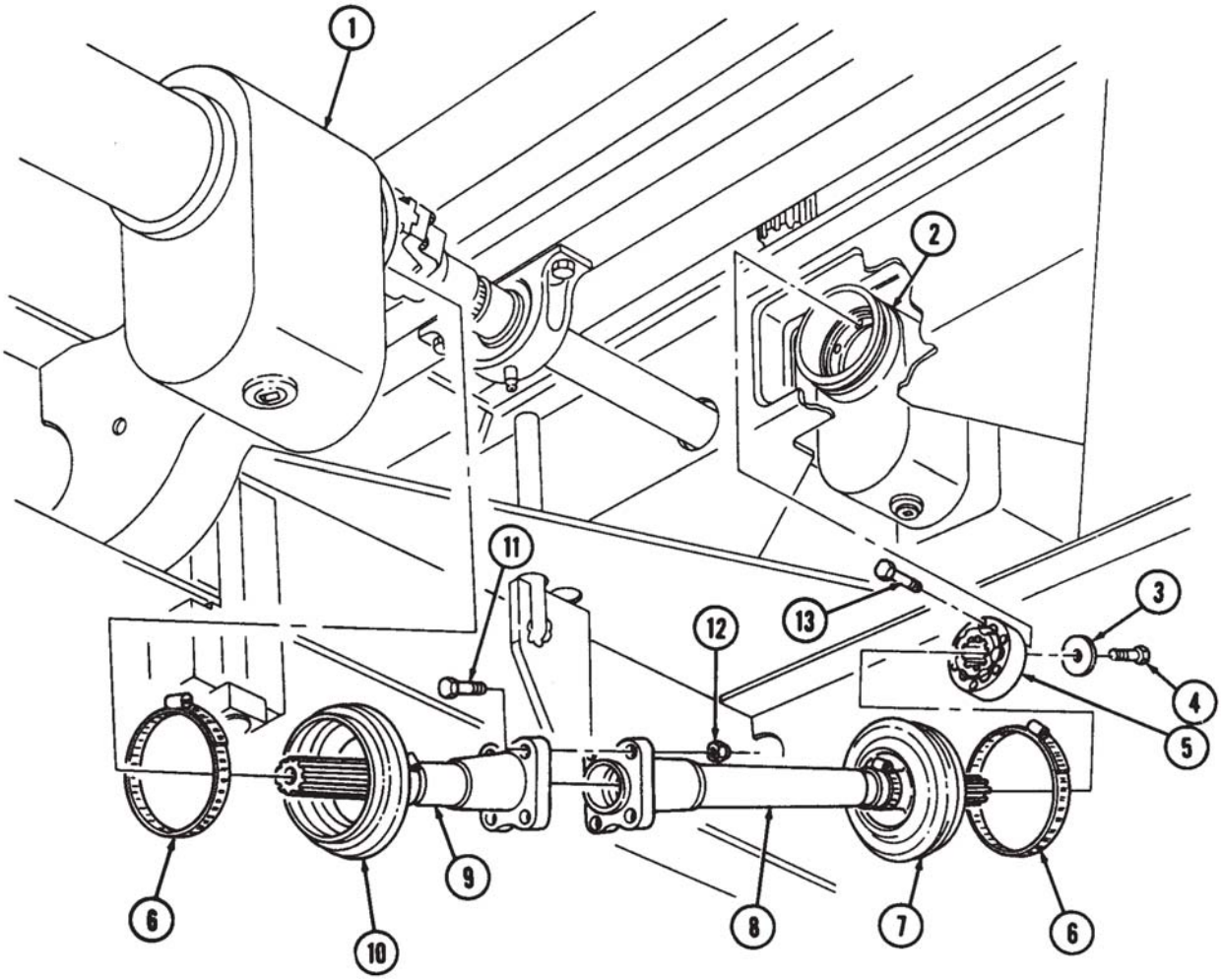

13-59. POWER DIVIDER YOKE AND SEAL REPLACEMENT

THIS TASK COVERS:

a. Removal **b. Installation**

INITIAL SETUP

APPLICABLE MODELS
M816

MATERIALS/PARTS
Five lockwashers
Gasket
Seal

REFERENCES (TM)
TM 9-2320-260-10
TM 9-2320-260-20P

EQUIPMENT CONDITION
- Parking brake set (TM 9-2320-260-10).
- Power divider-to-rear winch drive propeller shaft removed (para. 13-57).
- Power divider-to-transfer propeller shaft removed (para. 13-56).
- Power divider-to-hydraulic pump propeller shaft removed (para. 13-58).

NOTE

The left and right yokes are replaced basically the same. This procedure covers the left side yoke and seal.

a. Removal

1. Remove screw (1), lockwasher (2), washer (3), gasket (4), and yoke (5) from housing (6). Discard lockwasher (2). Discard gasket (4).
2. Remove four screws (11), lockwashers (10), and retaining plate (9) from housing (6). Discard lockwashers (10).
3. Remove gasket (7) and seal (8) from retaining plate (9). Discard gasket (7) and seal (8).

b. Installation

1. Install new seal (8) and new gasket (7) on retaining plate (9).
2. Install retaining plate (9) on housing (6) with four new lockwashers (10) and screws (11).
3. Install yoke (5) on housing (6) with new gasket (4), washer (3), new lockwasher (2), and screw (1).

13-59. POWER DIVIDER YOKE AND SEAL REPLACEMENT (Contd)

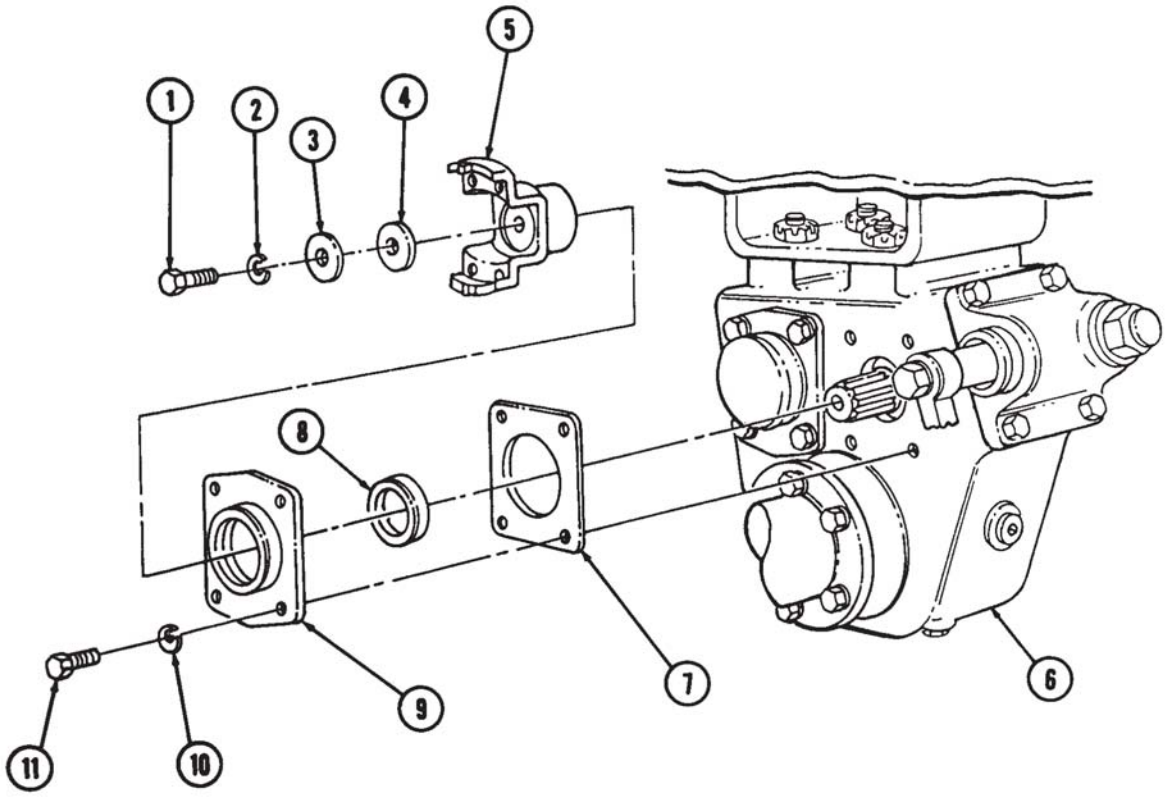

FOLLOW-ON TASKS: • Install power divider-to-hydraulic pump propeller shaft (para. 13-58).
• Install power divider-to-transfer propeller shaft (para. 13-56).
• Install power divider-to-rear winch drive propeller shaft (para. 13-57).

Section III. POWER TAKEOFF MAINTENANCE

13-60. POWER TAKEOFF MAINTENANCE INDEX

PARA. NO.	TITLE	PAGE NO.
13-61.	Transmission PTO Linkage Maintenance	13-134
13-62.	Transfer PTO Control Linkage Maintenance (M815, M819 W/W)	13-138
13-63.	Transmission PTO Control Linkage Maintenance (M820A2 WO/W)	13-140

13-61. TRANSMISSION PTO LINKAGE MAINTENANCE

THIS TASK COVERS:

a. Removal
b. Disassembly
c. Cleaning and Inspection
d. Assembly
e. Installation

INITIAL SETUP

APPLICABLE MODELS
All w/w

MATERIALS/PARTS
Three cotter pins
Ten locknuts
Lockwasher
Two woodruff keys
Drycleaning solvent (Appendix C, Item 29)
Rags (Appendix C, Item 22)

REFERENCES (TM)
TM 9-2320-260-10
TM 9-2320-260-20P

EQUIPMENT CONDITION
- Parking brake set (TM 9-2320-260-10).
- PTO lever in neutral position (TM 9-2320-260-10).
- Cab tunnel removed (para. 11-30).

GENERAL SAFETY INSTRUCTIONS
- Keep fire extinguisher nearby when using drycleaning solvent.
- Compressed air source will not exceed 30 psi (207 kPa).
- Eyeshields must be worn when cleaning with compressed air.

a. Removal

1. Remove two cotter pins (8), clevis pins (10), and link rod (9) from control lever (6) and lever (11). Discard cotter pins (8).
2. Remove two locknuts (2), screws (37), bracket (l), control lever (6), and spacer (7) from crossmember (36), and shaft (34). Discard locknuts (2).
3. Remove cotter pin (25), clevis pin (23), and connecting rod (24) from lever (19). Discard cotter pin (25).
4. Remove four locknuts (27), screws (14), two brackets (15), and shaft (17) from crossmember (35). Discard locknuts (27).
5. Remove screw (30) and lockwasher (31) from power takeoff (33) and power takeoff lever (28). Discard lockwasher (31).
6. Remove locknut (29), screw (32), and power takeoff lever (28) from power takeoff (33). Discard locknut (29).

13-61. TRANSMISSION PTO LINKAGE MAINTENANCE (Contd)

b. Disassembly

1. Remove locknut (5), screw (3), and stop (4) from bracket (1). Discard locknut (5).
2. Remove locknut (12), screw (13), and lever (11) from shaft (17). Discard locknut (12).
3. Remove locknut (18), screw (20), and lever (19) from shaft (17). Discard locknut (18).
4. Remove two woodruff keys (16) and brackets (15) from shaft (17). Discard woodruff keys (16).
5. Pull quick-release pin (21) out and remove connecting rod (24) from power takeoff lever (28).
6. Loosen jamnut (26), then remove clevis end (22) and jamnut (26) from connecting rod (24).

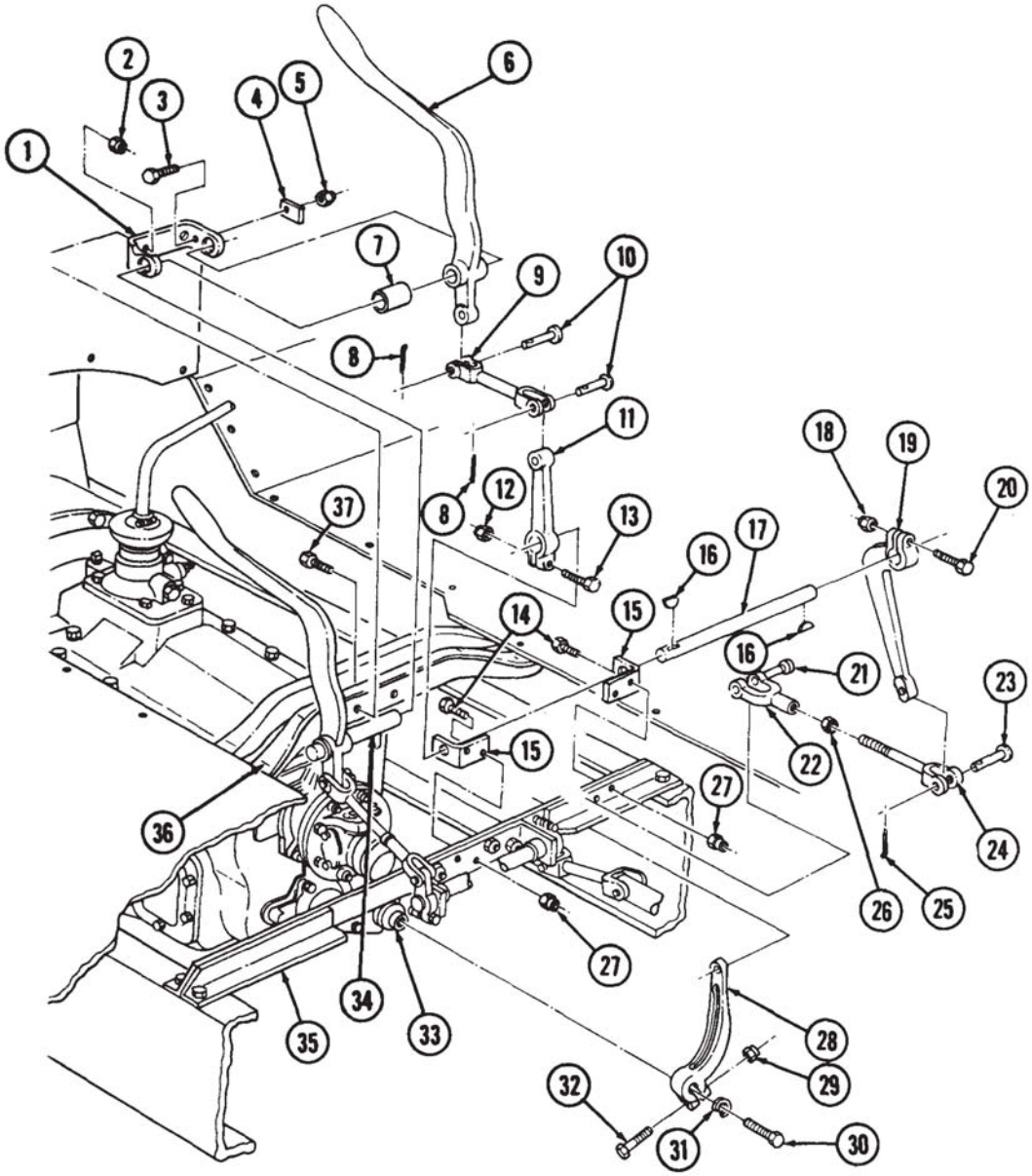

13-61. TRANSMISSION PTO LINKAGE MAINTENANCE (Contd)

c. Cleaning and Inspection

WARNING

- Drycleaning solvent is flammable and will not be used near open flame. Use only in well-ventilated places. Failure to do so may result in injury to personnel.
- Compressed air source will not exceed 30 psi (207 kpa). When cleaning with compressed air, eyeshields must be worn. Failure to wear eyeshields may result in injury to personnel.

1. Clean all parts using drycleaning solvent. Dry parts using compressed air.
2. Inspect shaft (17) for twists, bends, and cracks. Replace if damaged.
3. Inspect link rod (9) and connecting rod (24) for twists, bends, and cracks. Replace rods (9) and (24) if damaged.
4. Inspect control lever (6) and lever (19) for cracks, breaka, and twists. Replace levers (6) and (19) if damaged.

d. Assembly

1. Position jamnut (26) and clevis end (22) on connecting rod (24).
2. Pull quick-release pin (21) out and install connecting rod (24) on power takeoff lever (28),
3. Install two brackets (15) and new woodruff keys (16) on shaft (17).
4. Install lever (19) on shaft (17) with screw (20) and new locknut (18).
5. Install lever (11) on shaft (17) with screw (13) and new locknut (12).
6. Install stop (4) on bracket (1) with screw (3) and new locknut (5).

e. Installation

1. Install power takeoff lever (28) on power takeoff (33) with screw (32) and new locknut (29).
2. Install power takeoff lever (28) on power takeoff (33) with new lockwasher (31) and screw (30).
3. Install shaft (17) and two brackets (15) on crossmember (35) with four screws (14) and new locknuts (27).
4. Install connecting rod (24) on lever (19) with clevis pin (23) and new cotter pin (25).
5. Install bracket (1), spacer (7), and control lever (6) on shaft (34) and crossmember (36) with two screws (37) and new locknuts (2).
6. Install link rod (9) on control lever (6) and lever (11) with two clevis pins (10) and new cotter pins (8).

13-61. TRANSMISSION PTO LINKAGE MAINTENANCE (Contd)

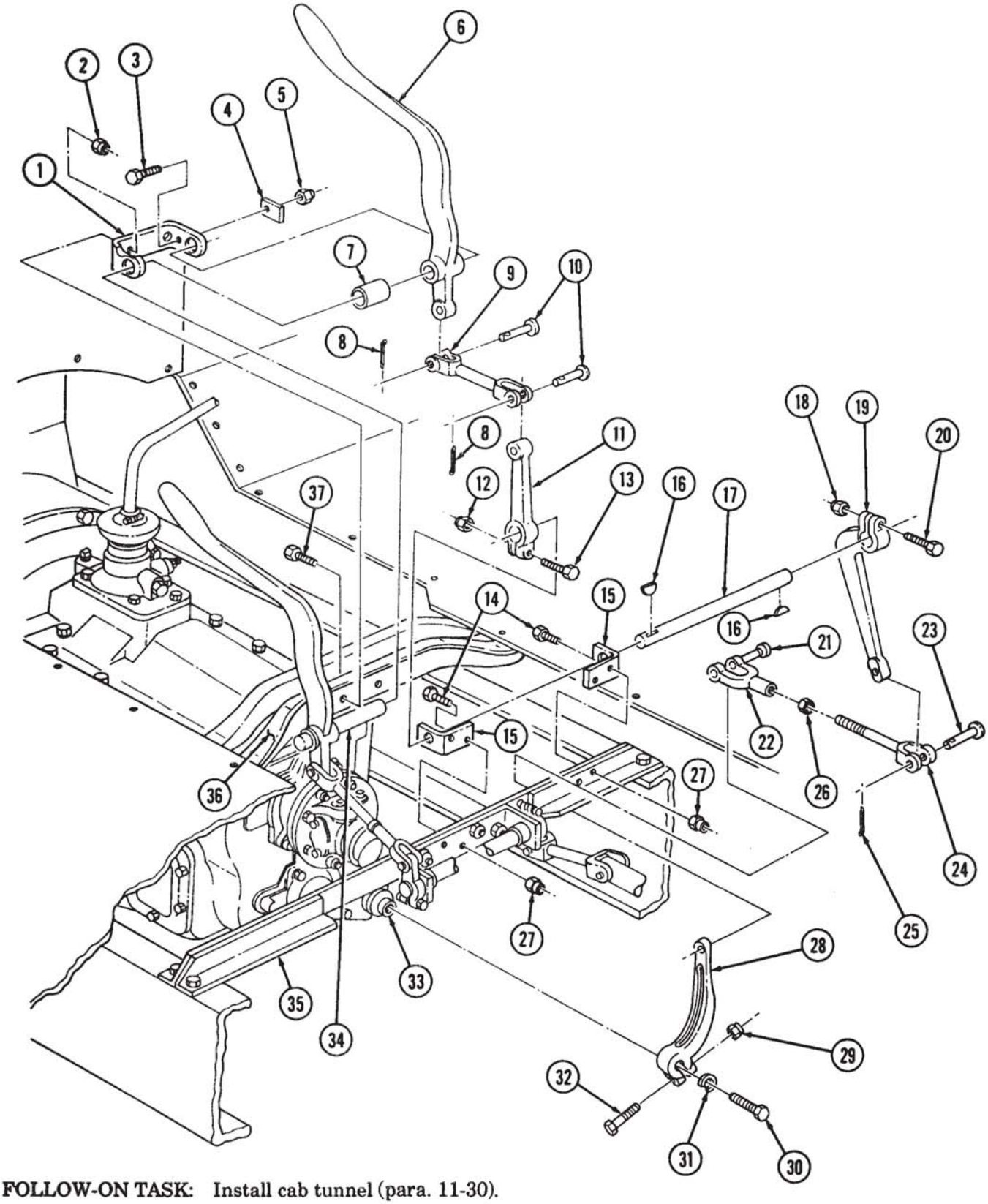

FOLLOW-ON TASK: Install cab tunnel (para. 11-30).

13-62. TRANSFER PTO CONTROL LINKAGE MAINTENANCE (M815, M819 W/W)

THIS TASK COVERS:

a. Removal
b. Inspection
c. Installation

INITIAL SETUP

APPLICABLE MODELS
M815 W/W, M819 W/W

MATERIALS/PARTS
Four cotter pins
Lockwasher
Woodruff key

REFERENCES (TM)
TM 9-2320-260-10
TM 9-2320-260-20P

EQUIPMENT CONDITION
- Parking brake set (TM 9-2320-260-10).
- Driver's seat removed (para. 11-32).

a. Removal

1. Remove two cotter pins (2), clevis pins (1), and link rod (3) from lever (20) and control lever (5). Discard cotter pins (2).
2. Remove two cotter pins (12), clevis pins (13), and link rod (14) from lever (11) and power takeoff shift lever (17). Discard cotter pins (12).
3. Remove nut (16), lockwasher (15), screw (10), and lever (11) from shaft (19). Discard lockwasher (15).
4. Remove woodruff key (8) from shaft (19). Discard woodruff key (8).
5. Remove lever (20), shaft (19), and spacer (18) from bracket (9).
6. Remove straight pin (4), pin (7), and control lever (5) from bracket (6).

b. Inspection

1. Inspect link rods (3) and (14) for cracks, breaks, and bends. Replace link rod (3) or (14) if damaged.
2. Inspect control lever (5) for cracks, breaks, and bends. Replace control lever (5) if damaged.
3. Inspect levers (11) and (20) for cracks, breaks, and bends. Replace levers (11) and (20) if damaged.

c. Installation

1. Install control lever (5) on bracket (6) with pin (7) and straight pin (4).
2. Install spacer (18), shaft (19), and lever (20) on bracket (9).
3. Position new woodruff key (8) on shaft (19).
4. Install lever (11) on shaft (19) with screw (10), new lockwasher (15), and nut (16).
5. Install link rod (14) on power takeoff shift lever (17) and lever (11) with two clevis pins (13) and new cotter pins (12).
6. Install link rod (3) on lever (20) and control lever (5) with two clevis pins (1) and new cotter pins (2).

13-62. TRANSFER PTO CONTROL LINKAGE MAINTENANCE (M815, M819 W/W) (Contd)

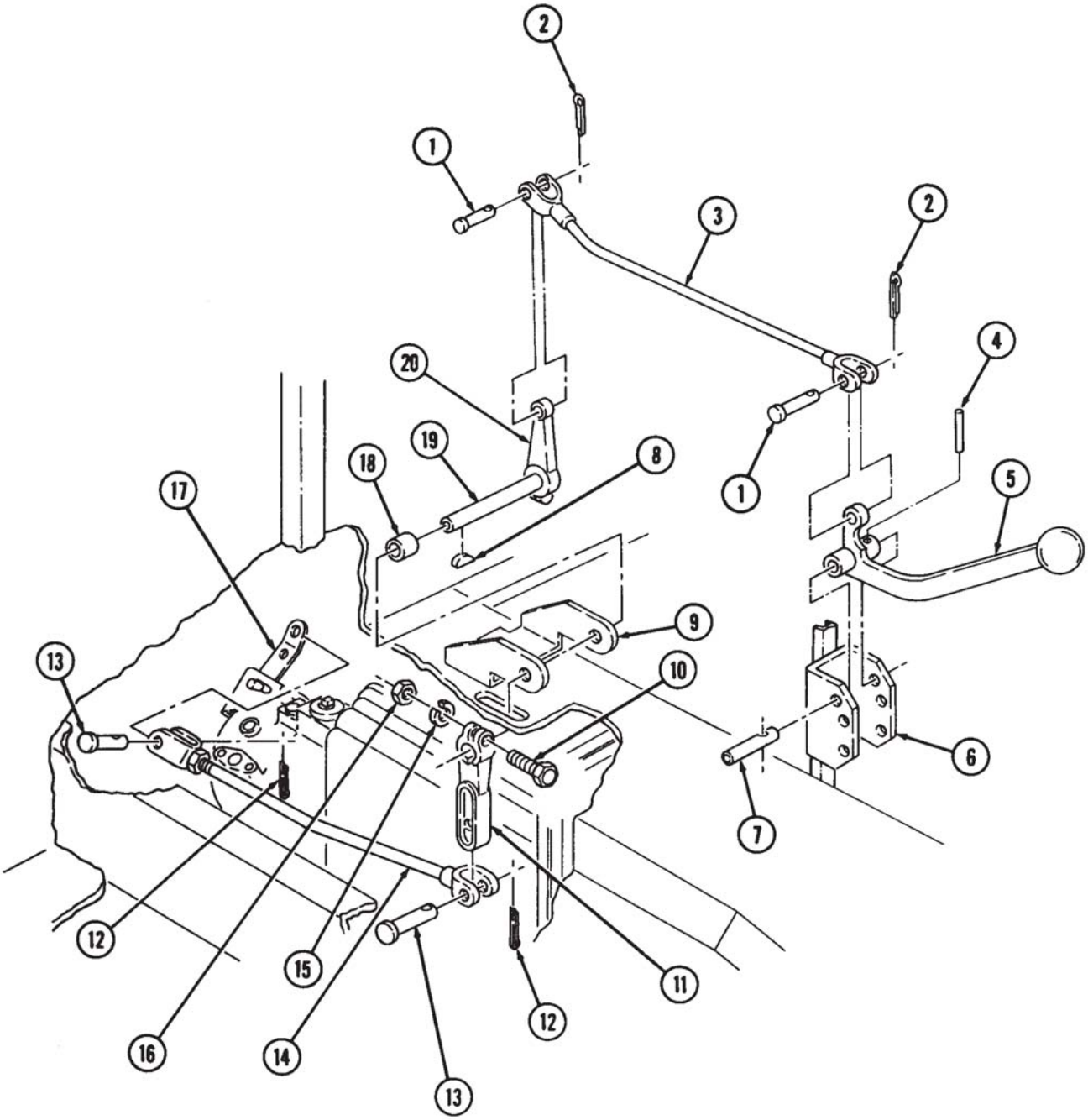

FOLLOW-ON TASK: Install driver's seat (para. 11-32).

13-63. TRANSMISSION PTO CONTROL LINKAGE MAINTENANCE (M820A2 WO/W)

THIS TASK COVERS:

a. Removal
b. Disassembly
c. Inspection
d. Assembly
e. Installation

INITIAL SETUP

APPLICABLE MODELS
M820A2 WO/W

MATERIALS/PARTS
Four cotter pins
Fourteen locknuts
Woodruff key

REFERENCES (TM)
TM 9-2320-260-10
TM 9-2320-260-20P

EQUIPMENT CONDITION
Parking brake set (TM 9-2320-260-10).

a. Removal

1. Remove cotter pin (14), clevis pin (13), and clevis (15) from lever (2). Discard cotter pin (14).
2. Bend four tabs (17) upward and remove boot (16) from floor (12),
3. Remove four locknuts (18), screws (19), and two brackets (11) from cab floor (12). Discard locknuts (18).
4. Remove cotter pin (35), clevis pin (37), and clevis (36) from lever (34). Discard cotter pin (35).
5. Remove cotter pin (25), clevis pin (22), and clevis (23) from power takeoff (24). Discard cotter pin (25).
6. Remove cotter pin (27), clevis pin (28), and clevis (29) from lever (31). Discard cotter pin (27).
7. Remove eight locknuts (33), screws (26), and two brackets (21) from crossmember (38). Discard locknuts (33).

b. Disassembly

1. Remove locknut (3), screw (1), lever (2), and woodruff key (4) from shaft (5). Discard locknut (3) and woodruff key (4).
2. Remove two brackets (11) from shaft (5).
3. Remove two grease fittings (20) from brackets (11).
4. Remove locknut (8), washer (9), spring (10), and lock (6) from lever (7). Discard locknut (8).
5. Remove two spring pins (30) and levers (31) and (34) from shaft (32).
6. Remove shaft (32) from two brackets (21).

c. Inspection

1. Inspect shafts (5) and (32) for cracks, breaks, and twists. Replace shafts (5) and (32) if damaged.
2. Inspect three levers (2), (31), and (34) for cracks, breaks, and twists. Replace levers (2), (31), and (34) if damaged.

13-63. TRANSMISSION PTO CONTROL LINKAGE MAINTENANCE (M820A2 WO/W) (Contd)

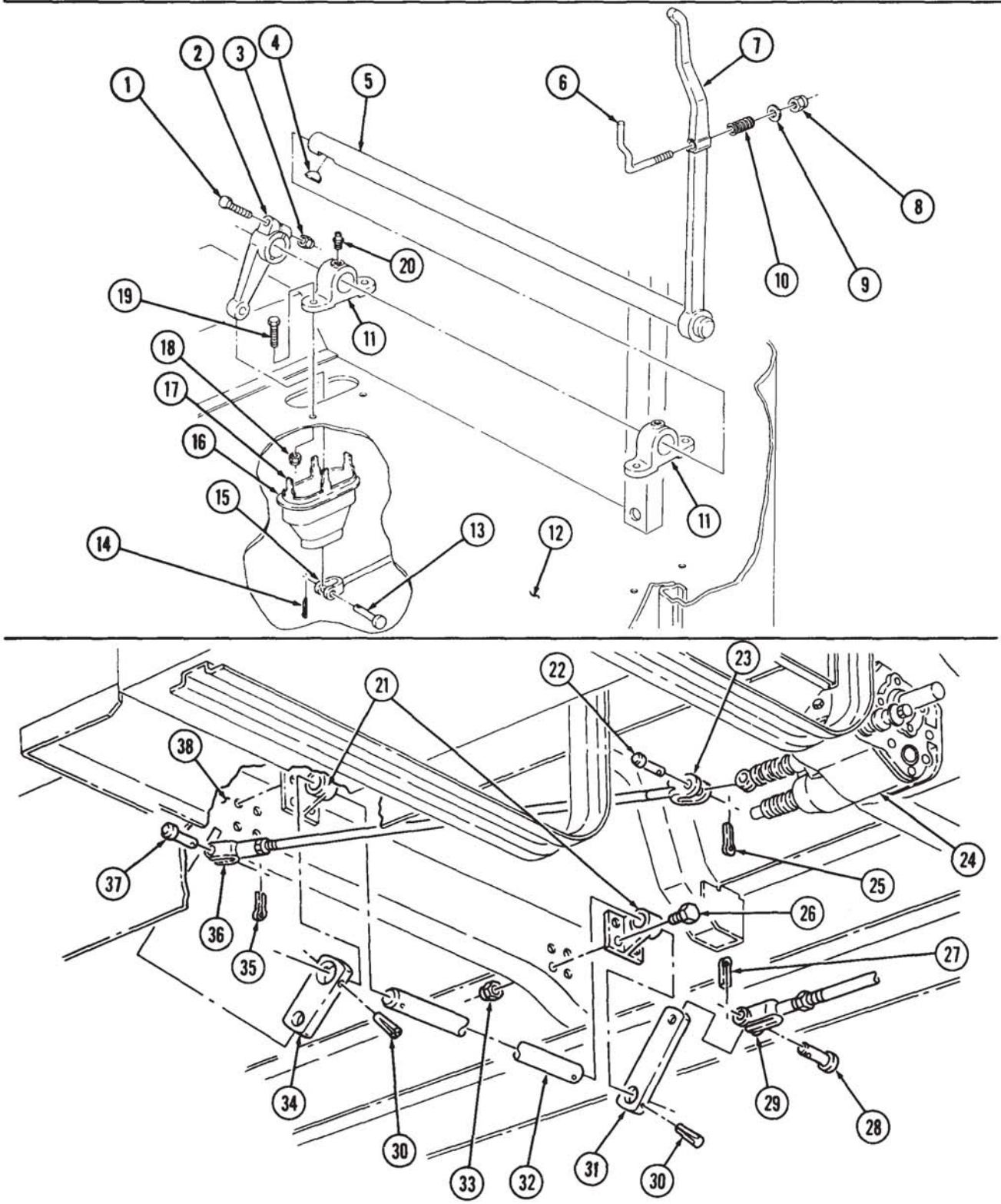

13-63. TRANSMISSION PTO CONTROL LINKAGE MAINTENANCE (M820A2 WO/W)

d. Assembly

1. Position two brackets (2) on shaft (13).
2. Install two levers (12) and (15) on shaft (13) with two spring pins (11).
3. Install lock (24), spring (28), and washer (27) on lever (25) with new locknut (26).
4. Install two grease fittings (38) on brackets (29).
5. Position two brackets (29) on shaft (23).
6. Install new woodruff key (22) and lever (20) on shaft (23) with screw (19) and new locknut (21).

e. Installation

1. Install two brackets (2) on crossmember (1) with eight screws (7) and new locknuts (14).
2. Install clevis (10) on lever (12) with clevis pin (9) and new cotter pin (8).
3. Install clevis (4) on power takeoff (5) with clevis pin (3) and new cotter pin (6).
4. Install clevis (17) on lever (15) with clevis pin (18) and new cotter pin (16).
5. Install two brackets (29) on floor (30) with four screws (37) and new locknuts (36).
6. Install boot (34) on floor (30) with four tabs (35).
7. Install clevis (33) on lever (20) with clevis pin (31) and new cotter pin (32).

13-63. TRANSMISSION PTO CONTROL LINKAGE MAINTENANCE (M820A2 WO/W) (Contd)

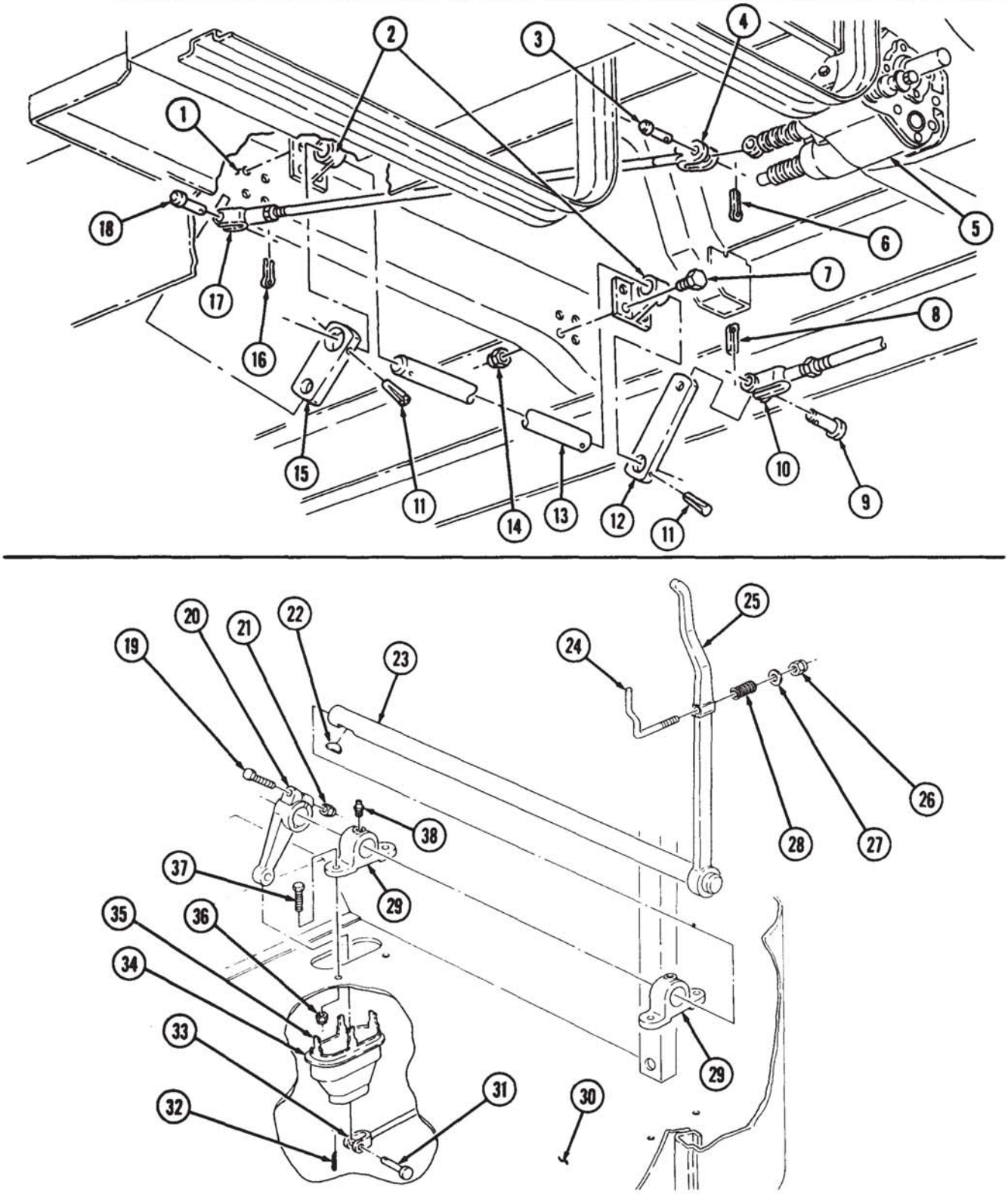

CHAPTER 14
SPECIAL PURPOSE KITS MAINTENANCE

Section I. Winterzation Kits Maintenance (page 14-1)
Section II. Deepwater Fording Kit Maintenance (page 14-52)
Section III. A-Frame Kit Maintenance (page 14-58)
Section IV. Mounting Kits Maintenance (page 14-62)
Section V. Mini Lighting Kits Maintenance (page 14-72)
Section VI. 100-Amp Alternator Kit Maintenance (page 14-78)
Section VII. Troop Seatbelt Kits Maintenance (page 14-84)
Section VIII. Hand Airbrake Kit Maintenance (page 14-90)
Section IX. Tachograph Kit Maintenance (page 14-92)
Section X. Convoy Warning Light Kit Maintenance (page 14-96)
Section XI. Van Cable Reel Kit Maintenance (page 14-116)

Section I. WINTERIZATION KITS MAINTENANCE

14-1. WINTERIZATION KITS MAINTENANCE INDEX

PARAS NO.	TITLE	PAGE NO.
14-2.	Fuel Burning Personnel Heater Replacement	14-2
14-3.	Personnel Heater Mounting Bracket Replacement	14-4
14-4.	Personnel Heater Fuel Pump Replacement	14-6
14-5.	Personnel Heater Control Box Replacement	14-8
14-6.	Personnel Heater Exhaust Tube Replacement	14-9
14-7.	Fuel Burning Personnel Heater Harness Replacement	14-10
14-8.	Personnel Heater Duct Replacement	14-12
14-9.	Personnel Heater Diverter Replacement	14-16
14-10.	Personnel Hot Water Heater and Mounting Bracket Replacement	14-18
14-11.	Personnel Hot Water Heater Hose Replacement	14-20
14-12.	Personnel Heater Control Cables Replacement	14-22
14-13.	Control Switch, Resistor, and Leads Replacement	14-24
14-14.	Engine Coolant Heater and Mounting Bracket Replacement	14-26
14-15.	Coolant Heater Pump and Mounting Bracket Replacement	14-30
14-16.	Engine Coolant Heater Hoses Replacement	14-32
14-17.	Engine Coolant Battery Box Heater Pad Replacement	14-35
14-18.	Engine Coolant Heater Harness Replacement	14-36
14-19.	Oil Pan Shroud and Exhaust Tube Replacement	14-38
14-20.	Thermal Barrier Insulation Replacement	14-40
14-21.	Hood and Radiator Cover Replacement	14-42
14-22.	Hardtop Maintenance	14-44
14-23.	Transmission Gearshift Lever, Transfer Shift Lever, and Front Winch Lever Cover Replacement	14-47
14-24	Alcohol Evaporator Replacement	14-48
14-25.	Slave Receptacle Kit Replacement	14-50

14-2. FUEL BURNING PERSONNEL HEATER REPLACEMENT

THIS TASK COVERS:

a. Removal **b. Installation**

INITIAL SETUP

APPLICABLE MODEL
All

MATERIALS/PARTS
Five lockwashers
Two cotter pins
Five locknuts

REFERENCES (TM)
TM 9-2320-260-10
TM 9-2320-260-20P

EQUIPMENT CONDITION
- Parking brake set (TM 9-2320-260-10).
- Hood raised and secured (TM 9-2320-260-10).
- Battery ground cable disconnected (para. 4-48).

a. Removal

1. Remove four locknuts (23), washers (24), screws (20), and fuel pump shield (19) from splash panel (21). Discard locknuts (23).
2. Close fuel valve (25) at fuel pump (22).
3. Disconnect harness (5) from heater (6).
4. Remove locknut (12), screw (9), lockwasher (10), and ground wire (13) from headlight bracket (11) and fender (26). Discard locknut (12) and lockwasher (10).
5. Disconnect fuel line (7) from elbow (8).
6. Remove two cotter pins (16), exhaust tube (18), and exhaust elbow (17) from heater (6). Discard cotter pins (16).
7. Loosen clamp (27) and remove duct (1) from adapter (2).
8. Remove two clamps (15) and heater (6) from platform (14).
9. Remove four screws (4), lockwashers (3), and adapter (2) from heater (6). Discard lockwashers (3).

b. Installation

1. Install adapter (2) on heater (6) with four new lockwashers (3) and screws (4).
2. Install heater (6) on platform (14) with two clamps (15).
3. Install duct (1) on adapter (2) and tighten clamp (27).
4. Install exhaust elbow (17) and exhaust tube (18) on heater (6) with two new cotter pins (16).
5. Connect fuel line (7) to elbow (8).
6. Connect harness (5) on heater (6).
7. Install ground wire (13) on fender (26) and headlight bracket (11) with new lockwasher (10), screw (9), and new locknut (12).
8. Open fuel valve (25) at fuel pump (22).
9. Install fuel pump shield (19) on splash panel (21) with four screws (20), washers (24), and new locknuts (23).

14-2. FUEL BURNING PERSONNEL HEATER REPLACEMENT (Contd)

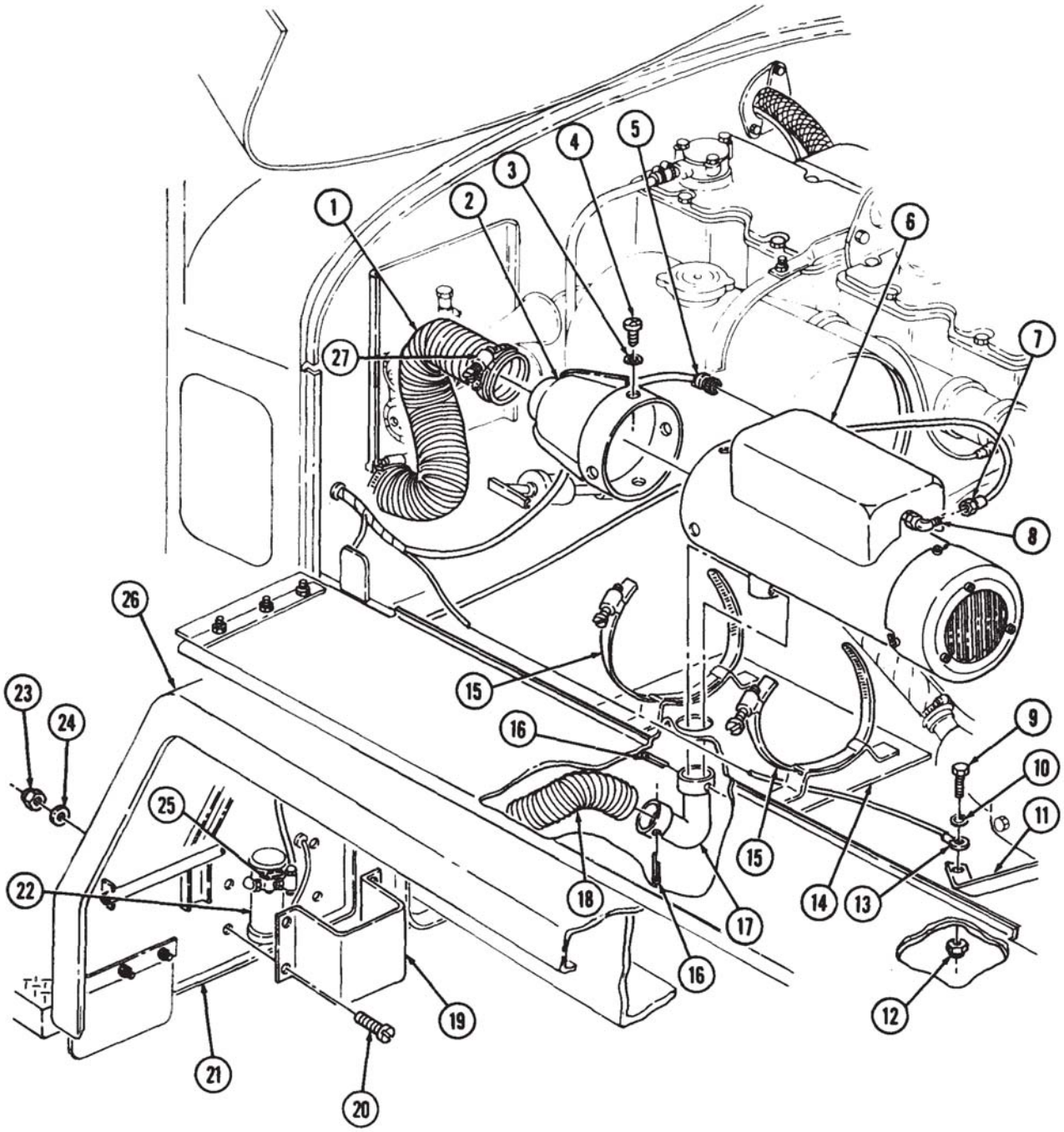

FOLLOW-ON TASK: Connect battery ground cable (para. 4-48).

14-3. PERSONNEL HEATER MOUNTING BRACKET REPLACEMENT

THIS TASK COVERS:

a. Removal **b. Installation**

INITIAL SETUP

APPLICABLE MODELS
All

MATERIALS/PARTS
Twelve locknuts
Lockwasher

REFERENCES (TM)
TM 9-2320-260-10
TM 9-2320-260-20P

EQUIPMENT CONDITION
- Parking brake set (TM 9-2320-260-10).
- Hood raised and secured (TM 9-2320-260-10).
- Fuel burning personnel heater removed (para. 14-2).

NOTE

Fuel burning personnel heater and hot water personnel heater mounting brackets are removed basically the same. This procedure covers the fuel burning personnel heater.

a. Removal

1. Remove four locknuts (3), washers (4), screws (9), washers (8), platform (24), and mounting plate (2) from supports (6) and (23). Discard locknuts (3).
2. Remove four locknuts (1), washers (26), screws (25), and two brackets (5) from platform (2). Discard locknuts (1).
3. Remove two locknuts (19), screws (22), and four washers (18) from supports (6) and (23) and fender (20). Discard locknuts (19).
4. Remove locknut (7), washer (17), screw (21), and support (23) from frame (13). Discard locknut (7).
5. Remove locknut (10), lockwasher (11), ground cable (12), screw (16), washer (15), panel supPort (14), and support (6) from frame (13). Discard locknut (10) and lockwasher (11).

b. Installation

1. Position support (6) and panel support (14) on frame (13) with washer (15) and screw (16).
2. Install ground cable (12) on screw (16) and frame (13) with new lockwasher (11) and new locknut (10).
3. Install support (23) on frame (13) with screw (21), washer (17), and new locknut (7).
4. Install supports (6) and (23) on fender (20) with two screws (22), four washers (18), and two new locknuts (19).
5. Install two brackets (5) on platform (2) with four screws (25), washers (26), and new locknuts (l).
6. Install mounting plate (2) and platform (24) on supports (6) and (23) with four screws (9), washers (8), washers (4), and new locknuts (3).

14-3. PERSONNEL HEATER MOUNTING BRACKET REPLACEMENT (Contd)

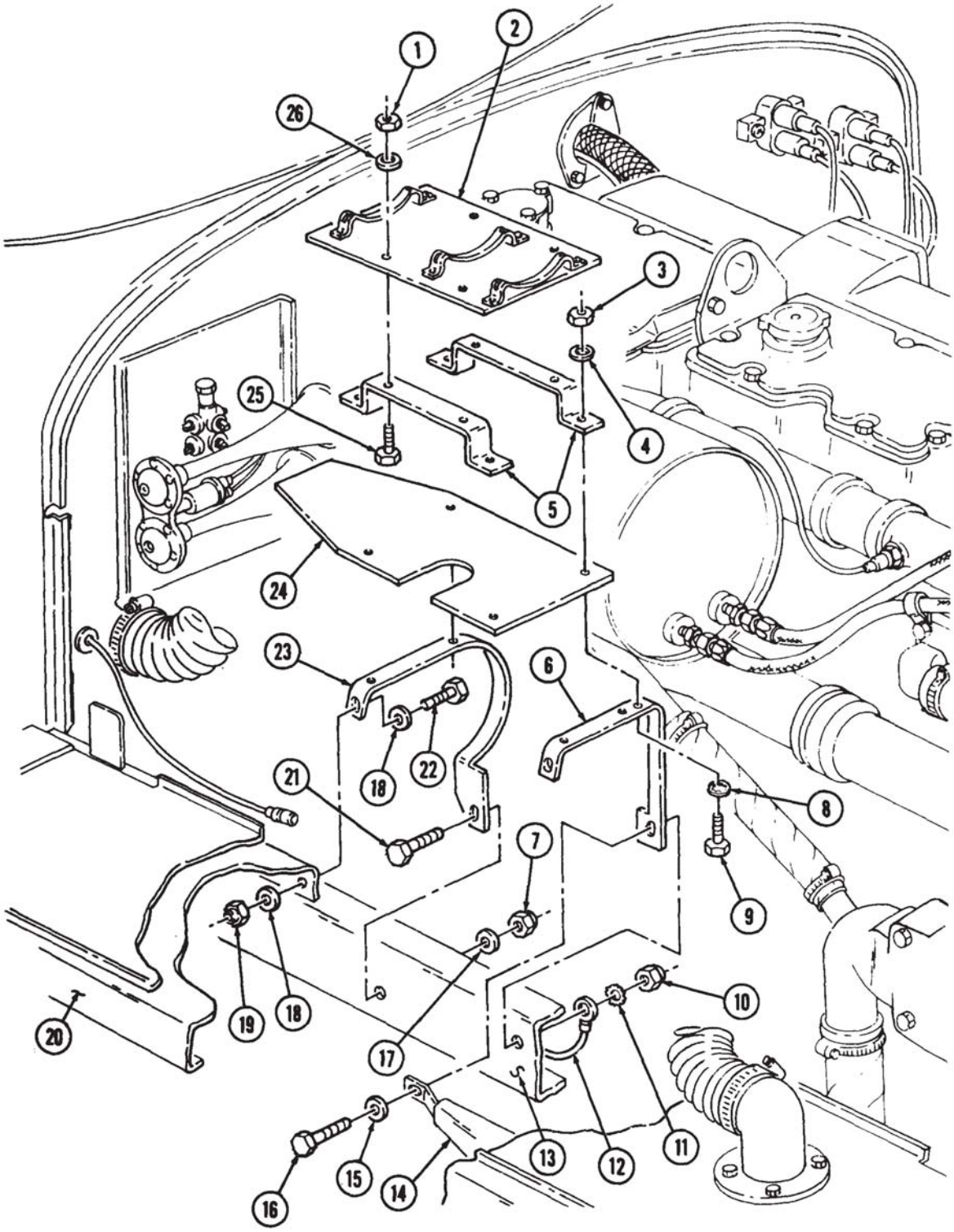

FOLLOW-ON TASK: Install fuel burning personnel heater (para. 14-2).

14-4. PERSONNEL HEATER FUEL PUMP REPLACEMENT

THIS TASK COVERS:

a. Removal **b. Installation**

INITIAL SETUP

APPLICABLE MODELS
All

MATERIALS/PARTS
Six locknuts
Cap and plug set (Appendix C, Item 9)
Antiseize tape (Appendix C, Item 30)

REFERENCES (TM)
TM 9-2320-260-10
TM 9-2320-260-20P

EQUIPMENT CONDITION
- Parking brake set (TM 9-2320-260-10).
- Battery ground cable disconnected (para. 4-48).

GENERAL SAFETY INSTRUCTIONS
Keep fire extinguisher nearby when working with open fuel lines.

WARNING

Diesel fuel is highly flammable. Do not perform fuel system procedures near open flame. Injury to personnel may result.

a. Removal

NOTE

Have drainage container ready to catch excess fuel.

1. Remove four locknuts (10), washers (9), screws (2), and fuel pump shield 11) from splash shield Discard locknuts (10).
2. Disconnect lead (20) from wire (1) and remove lead (20) from grommet (3) in splash shield (16).

CAUTION

Cap or plug all openings immediately after disconnecting lines and hoses to prevent contamination. Failure to do so may result in fuel pump damage.

3. Disconnect fuel line (6) from tee (7).
4. Disconnect hose (15) from reducer (14).
5. Remove two locknuts (19), washers (18), screws (5), lead clip (4), and fuel pump (17) from splash shield (16). Discard locknuts (19).
6. Remove reducer (14), elbow (13), tee (7), shutoff valve (8), and elbow (12) from fuel pump (17).

b. Installation

1. Apply antiseize tape to male threads of tee (7), elbows (12) and (13), and hose (15).
2. Install elbow (12), shutoff valve (8), tee (7), elbow (13), and reducer (14) on fuel pump (17).
3. Install fuel pump (17) and lead clip (4) on splash shield (16) with two screws (5), washers (18), and new locknuts (19).
4. Connect hose (15) to reducer (14).
5. Connect fuel line (6) to tee (7).
6. Insert lead (20) through grommet (3) in splash shield (16) and connect to wire (l).
7. Install fuel pump shield (11) on splash shield (16) with four screws (2), washers (9), and new locknuts (10).

14-4. PERSONNEL HEATER FUEL PUMP REPLACEMENT (Contd)

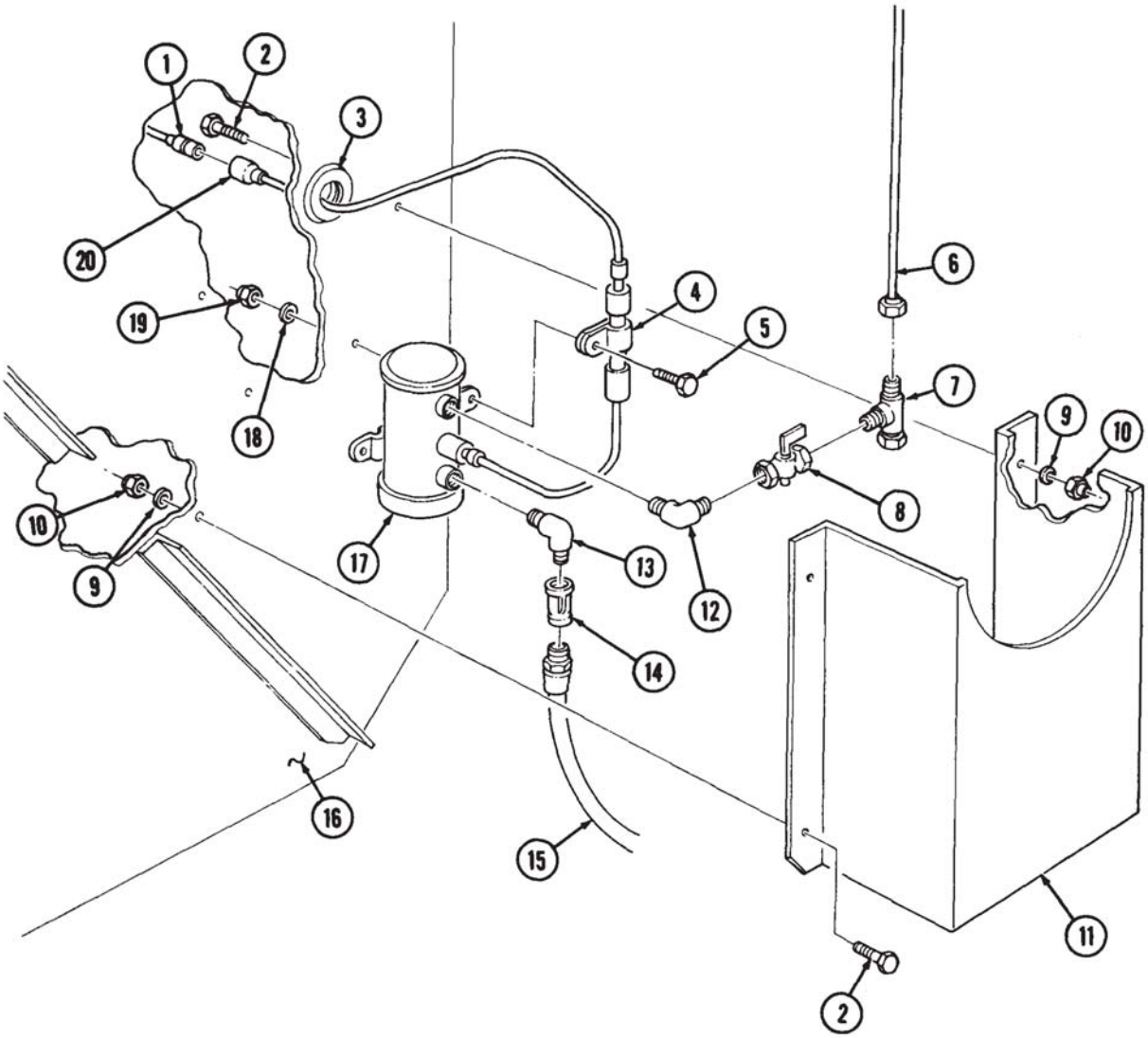

FOLLOW-ON TASK: Connect battery ground cable (para. 4-48).

14-5. PERSONNEL HEATER CONTROL BOX REPLACEMENT

THIS TASK COVERS:

a. Removal **b. Installation**

INITIAL SETUP

APPLICABLE MODELS
All

MATERIALS/PARTS
Two lockwashers

REFERENCES (TM)
TM 9-2320-260-10
TM 9-2320-260-20P

EQUIPMENT CONDITION
- Parking brake set (TM 9-2320-260-10).
- Battery ground cable disconnected (para. 4-48).

NOTE

This procedure is the same for the engine coolant heater control box.

a. Removal

1. Disconnect wiring harness (5) from control box (1).
2. Disconnect wire (7) from wire (6).
3. Remove two nuts (3), lockwashers (2), and control box (1) from bracket (4). Discard lockwashers (2).

b. Installation

1. Install control box (1) on bracket (4) with two new lockwashers (2) and nuts (3).
2. Connect wire (7) to wire (6).
3. Connect wiring harness (5) to control box (l).

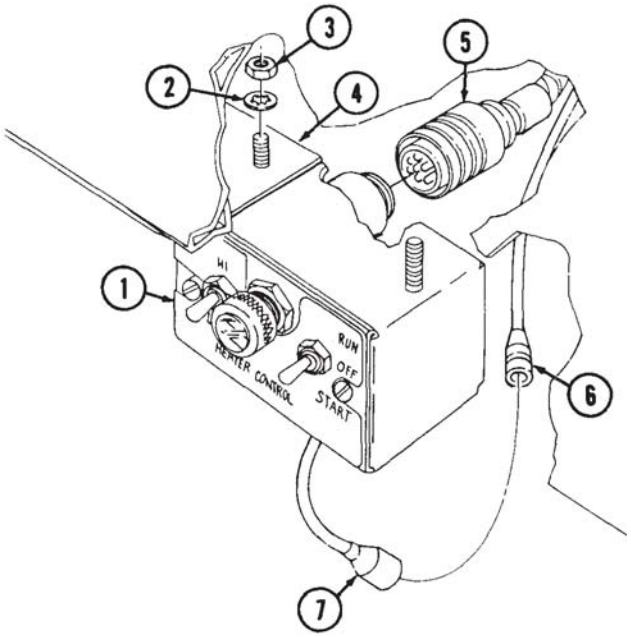

FOLLOW-ON TASK: Connect battery ground cable (para. 4-48).

14-6. PERSONNEL HEATER EXHAUST TUBE REPLACEMENT

THIS TASK COVERS

a. Removal b. Installation

INITIAL SETUP

APPLICABLE MODELS
All

MATERIALS/PARTS
Three locknuts
Cotter pin

REFERENCES (TM)
TM 9-2320-260-10
TM 9-2320-260-20P

EQUIPMENT CONDITION
Parking brake set (TM 9-2320-260-10).

a. Removal

1.. Remove cotter pin (1) and disconnect exhaust tube (7) from heater elbow (2). Discard cotter pin (1).
2. Remove locknut (6), screw (4), clamp (5), and exhaust tube (7) from side panel (3). Discard locknut (6).
3. Remove two locknuts (8), screws (10), clamps (9), and exhaust tube (7) from fender (11) Discard locknuts (8).

b. Installation

1. Connect exhaust tube (7) to heater elbow (2) with new cotter pin (1).
2. Install exhaust tube (7) on fender (11) with two clamps (9), screws (10), and new locknuts (8).
3. Install exhaust tube (7) on side panel (3) with clamp (5), screw (4), and new locknut (6).

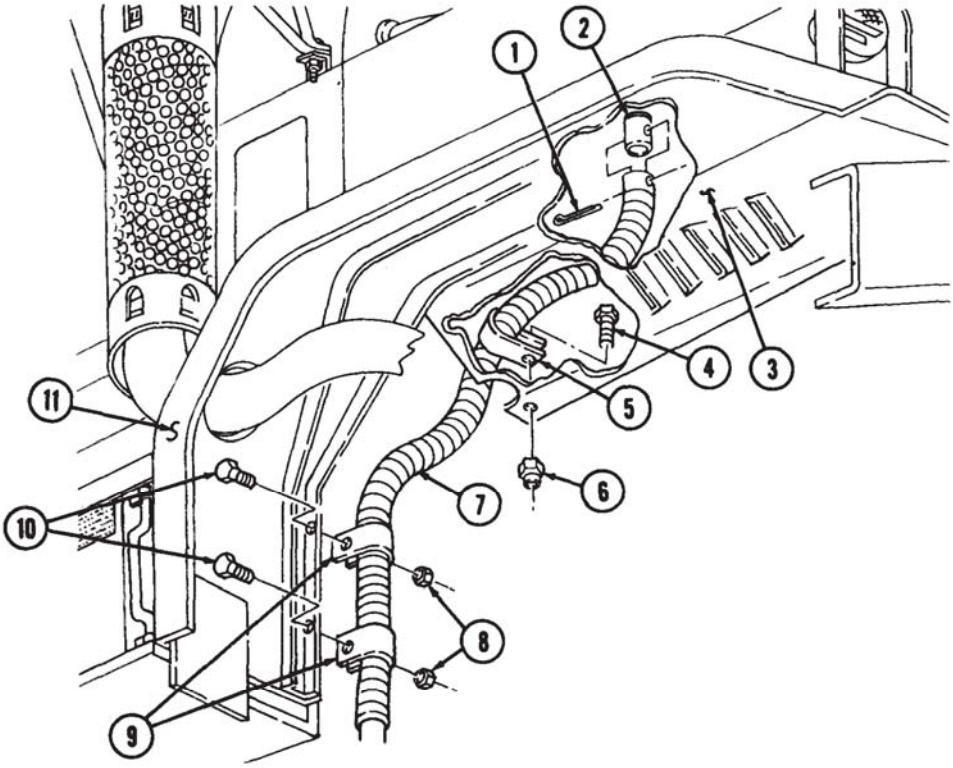

14-7. FUEL BURNING PERSONNEL HEATER HARNESS REPLACEMENT

THIS TASK COVERS:

a. Removal **b. Installation**

INITIAL SETUP

APPLICABLE MODELS
All

MATERIALS/PARTS
Two locknuts
Lockwasher

REFERENCES (TM)
TM 9-2320-260-10
TM 9-2320-260-20P

EQUIPMENT CONDITION
- Parking brake set (TM 9-2320-260-10).
- Battery ground cable disconnected (para. 4-48).

a. Removal

1. Disconnect harness (5) from control box (4).
2. Remove locknut (1), clamp (2), and harness (5) from stud (3) on firewall (16). Discard locknut (1).
3. Disconnect fuel pump lead (13) from wire (14).
4. Disconnect harness (5) from personnel heater (12).
5. Remove locknut (8), screw (6), lockwasher (7), and ground wire (10) from bracket (9) and frame (11). Discard locknut (8) and lockwasher (7).
6. Remove grommet (15) and harness (5) from firewall (16).

1. Connect harness (5) on personnel heater (12).
2. Connect wire (14) to fuel pump lead (13).
3. Install ground wire (10) on bracket (9) and frame (11) with new lockwasher (7), screw (6), and new locknut (8).
4. Insert harness (5) through hole in firewall (16).
5. Place grommet (15) around harness (5) and install grommet (15) on firewall (16).
6. Connect harness (5) to control box (4).
7. Install harness (5) and clamp (2) on stud (3) on firewall (16) with new locknut (1).

14-7. FUEL BURNING PERSONNEL HEATER HARNESS REPLACEMENT (Contd)

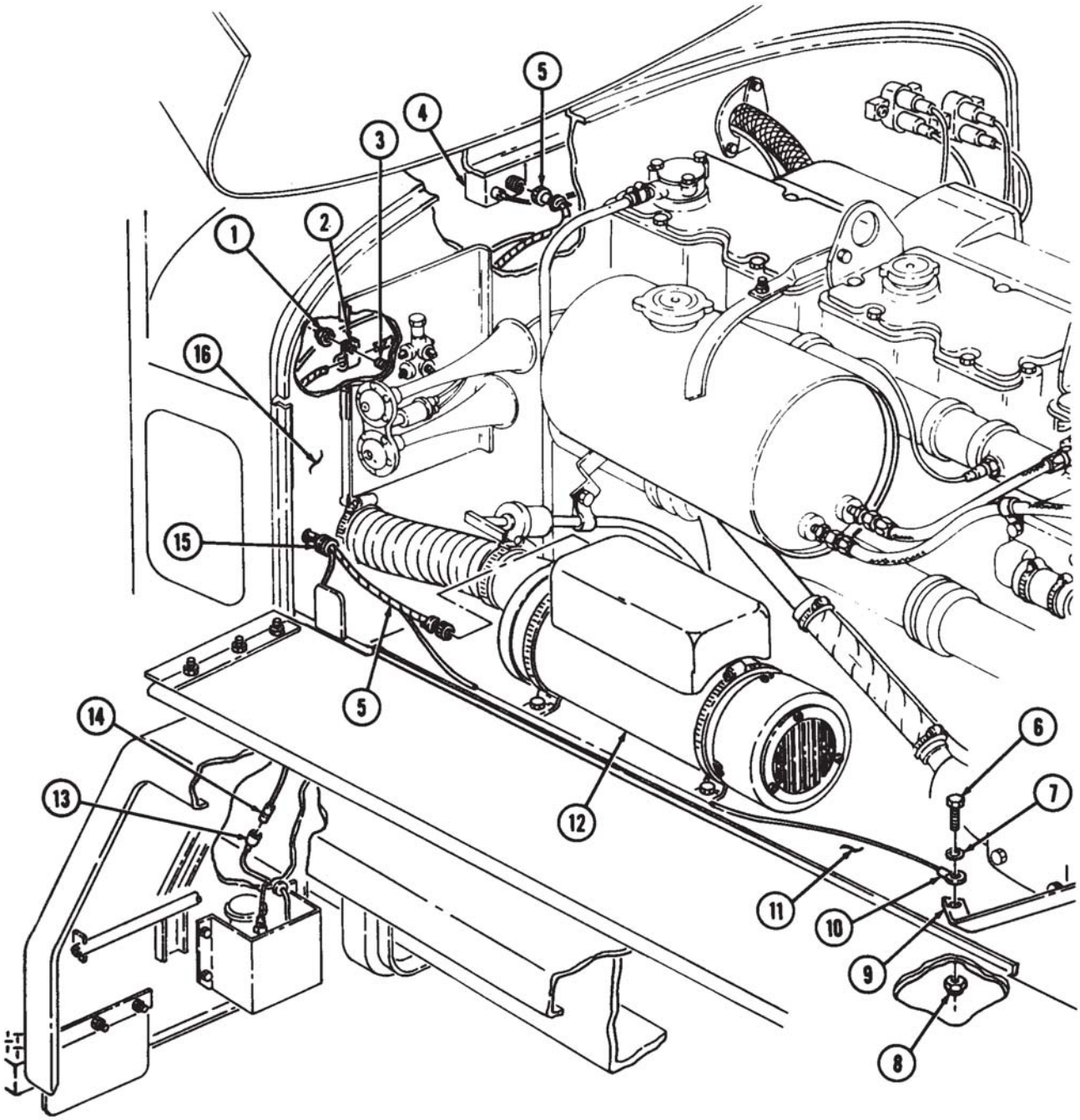

FOLLOW-ON TASK: Connect battery ground cable (para. 4-48).

14-8. PERSONNEL HEATER DUCT REPLACEMENT

THIS TASK COVERS:

a. Removal **b. Installation**

INITIAL SETUP

APPLICABLE MODELS
All

MATERIALS/PARTS
Seven lockwashers

REFERENCES (TM)
TM 9-2320-260-10
TM 9-2320-260-20P

EQUIPMENT CONDITION
- Parking brake set (TM 9-2320-260-10).
- Hood raised and secured (TM 9-2320-260-10).

NOTE

The ducts are replaced the same way for the fuel burning personnel heater kit. This procedure covers the hot water heater kit only.

a. Removal

1. Loosen two clamps (17) and remove duct (16) from heater adapter (14) and diverter adapter (15).
2. Loosen two clamps (10) and remove duct (1) from elbows (3) and (13).
3. Remove three nuts (11), lockwashers (12), screws (8), and hood (7) from right side panel (4). Discard lockwashers (12).
4. Remove four nuts (6), lockwashers (5), screws (2), elbow (3), and screen (9) from right side panel (4). Discard lockwashers (5).

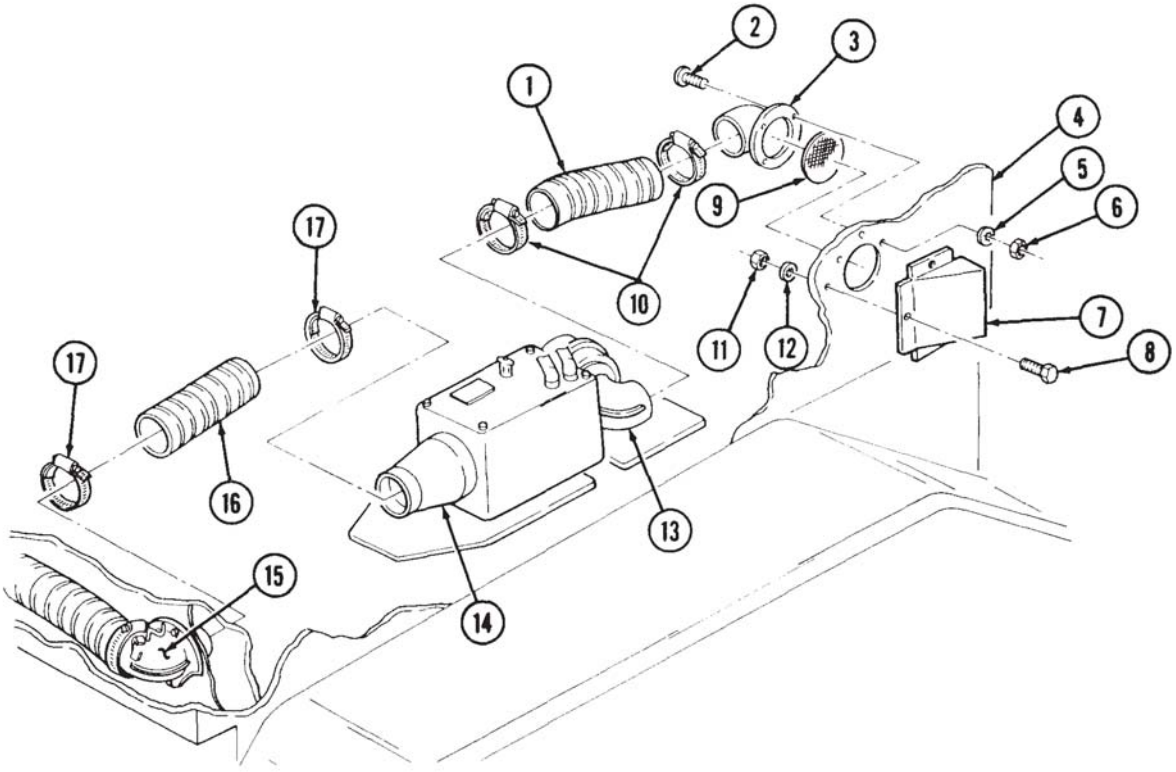

14-8. PERSONNEL HEATER DUCT REPLACEMENT (Contd)

5. Loosen two clamps (20) and remove duct (19) from diverter (18) and diverter adapter (15).
6. Loosen four clamps (22) and remove two ducts (23) from diverter (18) and deflectors (21).

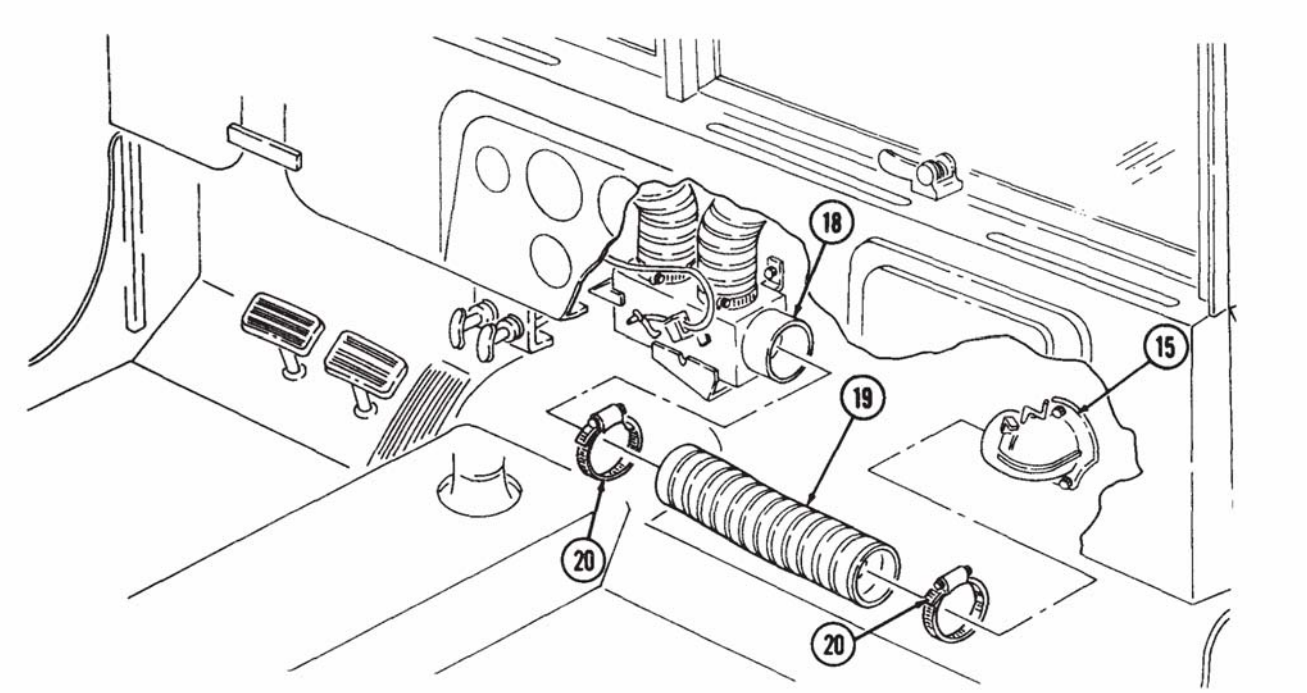

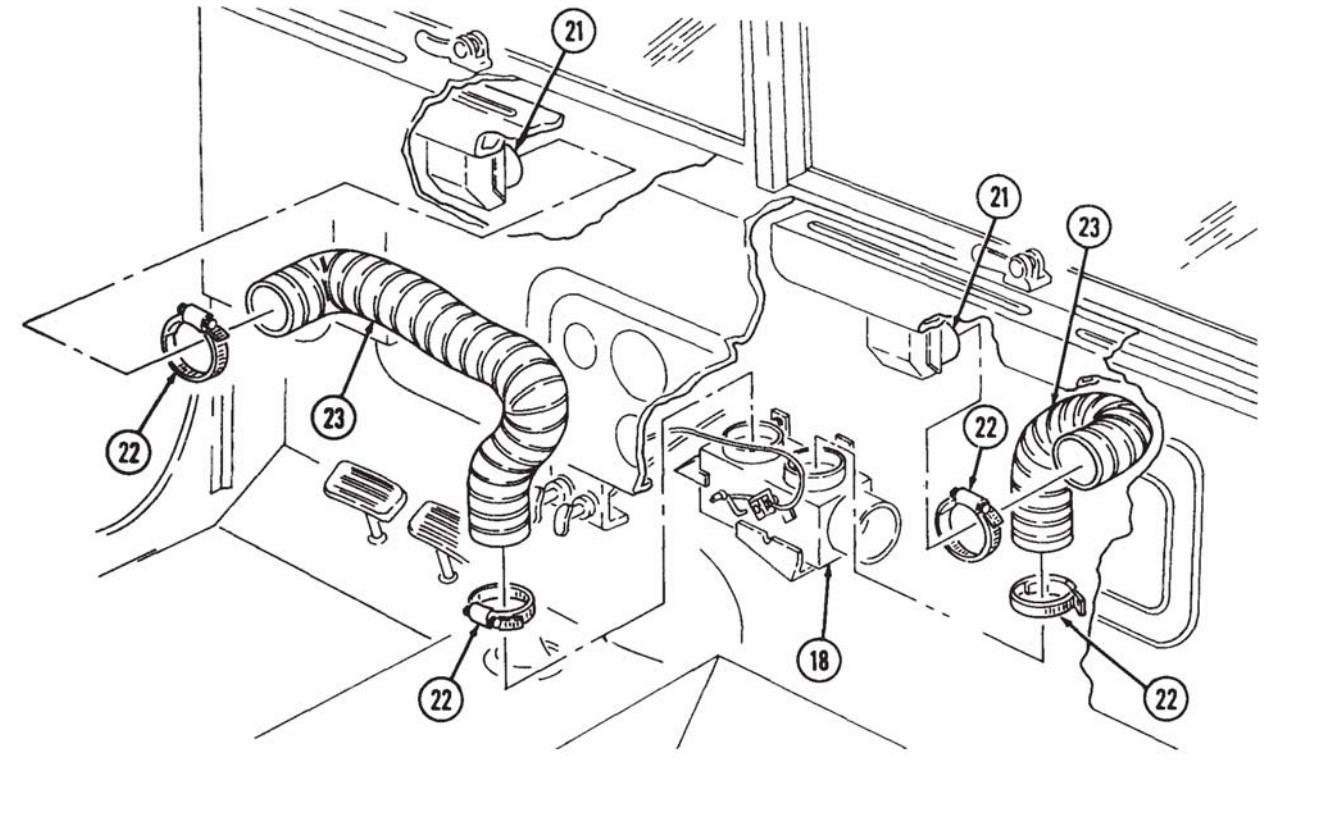

14-8. PERSONNEL HEATER DUCT REPLACEMENT (Contd)

b. Installation

1. Install two ducts (2) on diverter (4) and deflectors (1) with four clamps (3). Tighten clamps (3).
2. Install duct (5) on diverter (4) and diverter adapter (6) with two clamps (7). Tighten clamps (7).
3. Install screen (11) and elbow (10) on right side panel (12) with four screws (9), new lockwashers (13), and nuts (14).
4. Install hood (15) on right side panel (12) with three screws (16), new lockwashers (17), and nuts (18).
5. Install duct (19) on elbows (10) and (20) with two clamps (8). Tighten clamps (8).
6. Install duct (22) on heater adapter (21) and diverter adapter (6) with two clamps (23). Tighten clamps (23).

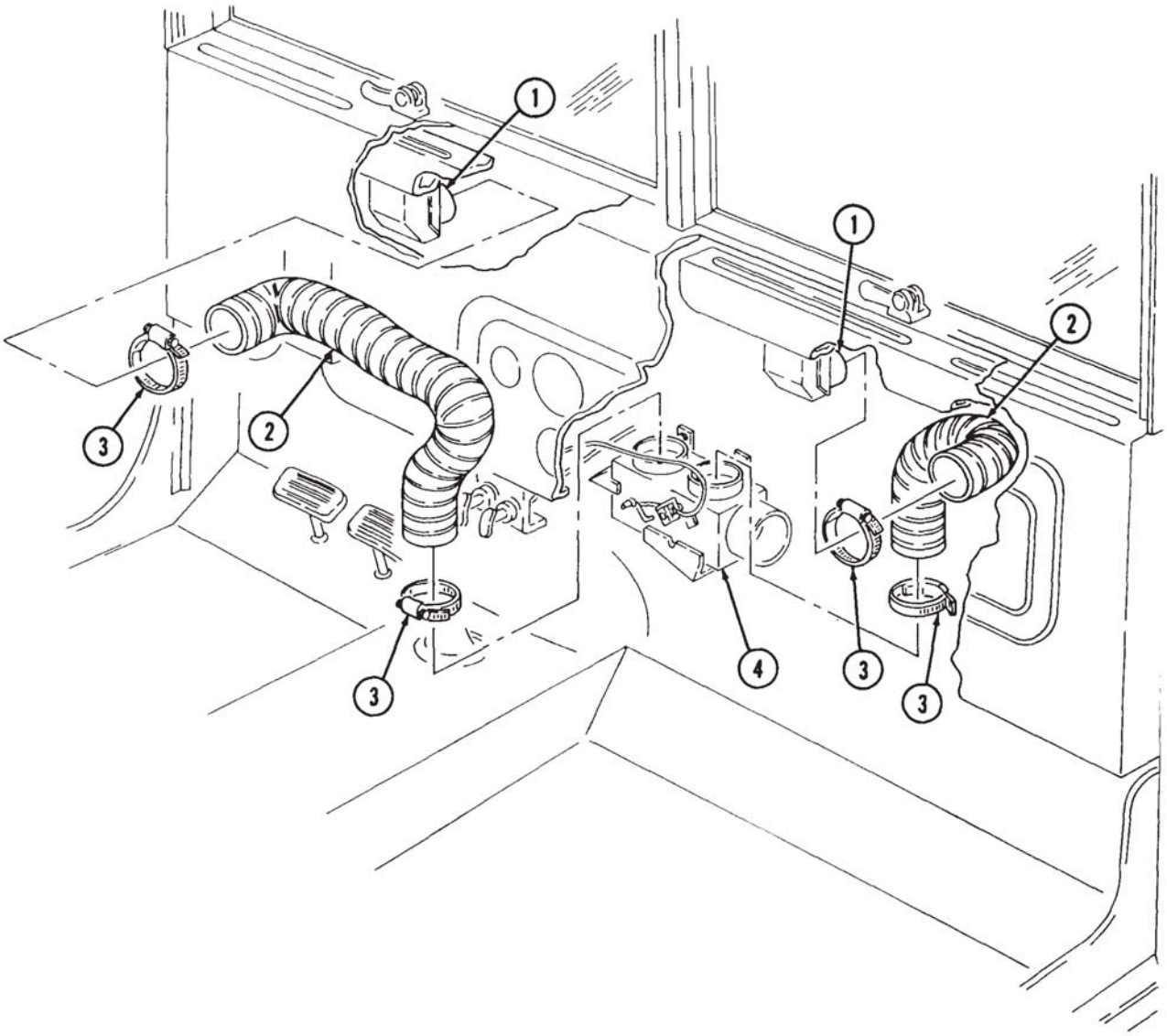

14-8. PERSONNEL HEATER DUCT REPLACEMENT (Contd)

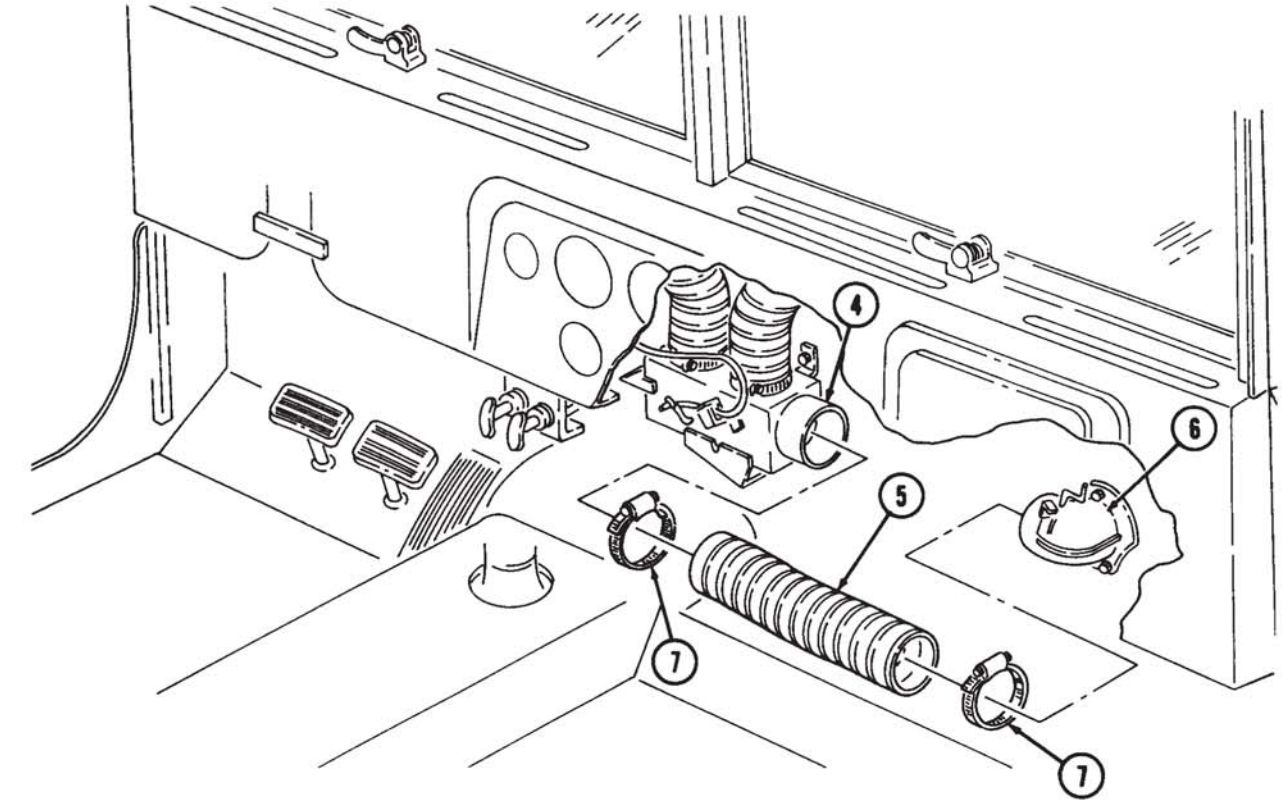

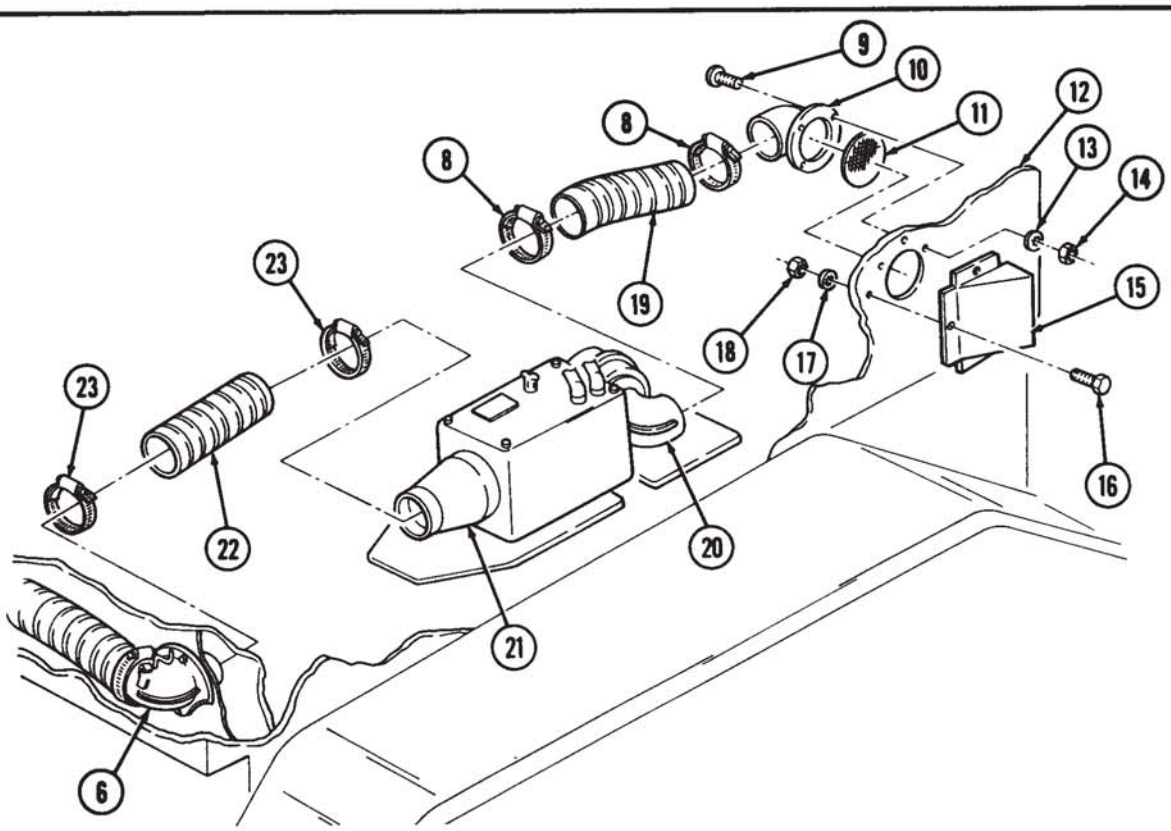

14-9. PERSONNEL HEATER DIVERTER REPLACEMENT

THIS TASK COVERS:

a. Removal **b. Installation**

INITIAL SETUP

APPLICABLE MODELS
All

MATERIALS/PARTS
Eight lockwashers

REFERENCES (TM)
TM 9-2320-260-10
TM 9-2320-260-20P

EQUIPMENT CONDITION
- Parking brake set (TM 9-2320-260-10).
- Hood raised and secured (TM 9-2320-260-10).
- Personnel heater ducts removed (para. 14-8).

NOTE

The diverter is replaced the same way for the fuel burning personnel heater kit. This procedure covers the hot water heater kit only.

a. Removal

1. Remove screw (11), clamp (10), nut (8), and control cable (1) from diverter (9) and arm (12).
2. Remove screw (6), clamp (7), nut (3), and control cable (2) from diverter adapter (4) and arm (5).

NOTE

Assistant will help with steps 3 and 4.

3. Remove two nuts (16). screws (17), four lockwashers (15), and diverter adapter (4) from firewall (13). Discard lockwashers (15).
4. Remove four nuts (14), screws 19), lockwashers (18), and diverter (9) from firewall (13). Discard lockwashers (18).

b. Installation

NOTE

Assistant will help with steps 1 and 2.

1. Install diverter (9) on firewall (13) with four new lockwashers (18), screws (19), and nuts (14).
2. Install diverter adapter (4) on firewall (13) with four new lockwashers (15), two screws (17), and nuts (16).
3. Install control cable (2) on arm (5) and diverter adapter (4) with nut (3), clamp (7), and screw (6).
4. Install control cable (1) on arm (12) and diverter (9) with nut (8), clamp (10), and screw (11).

14-9. PERSONNEL HEATER DIVERTER REPLACEMENT (Contd)

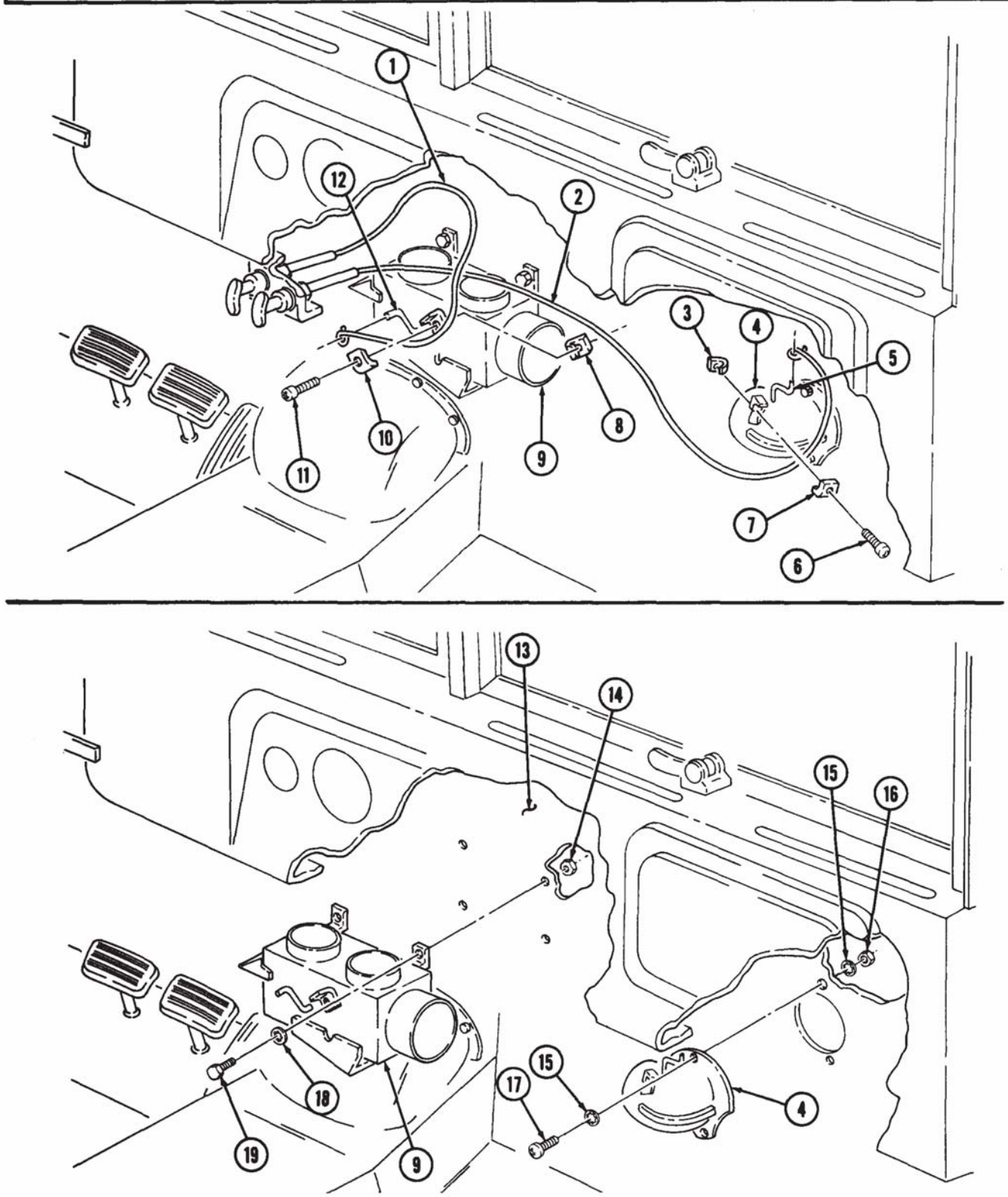

FOLLOW-ON TASK: Install personnel heater ducts (para. 14-8).

14-10. PERSONNEL HOT WATER HEATER AND MOUNTING BRACKET REPLACEMENT

THIS TASK COVERS:

a. Removal **b. Installation**

INITIAL SETUP

APPLICABLE MODELS
All

MATERIALS/PARTS
Eight lockwashers

REFERENCES (TM)
TM 9-2320-260-10
TM 9-2320-260-20P

EQUIPMENT CONDITION
- Parking brake set (TM 9-2320-260-10).
- Hood raised and secured (TM 9-2320-260-10).
- Lower right panel (TM 9-2320-260-10).
- Battery ground cable disconnected (para. 4-48).
- Cooling system drained (para. 3-45).

a. Removal

NOTE

- Close water manifold and engine oil cooler valves prior to removal.
- Have drainage container ready to catch coolant.

1. Disconnect lead (16) from wire (17).
2. Remove screw (21), clamp (20), and wire (17) from heater (3).
3. Remove clamp (7) and hose (6) from elbow (18).
4. Remove clamp (4) and hose (5) from elbow (19).
5. Remove clamp (24) and duct (22) from adapter (23).
6. Remove clamp (12) and duct (8) from elbow (13).
7. Remove four screws (9), washers (10), and heater (3) from two brackets (11).
8. Remove four screws (2), lockwashers (1), and adapter (23) from heater (3). Discard lockwashers (1).
9. Remove four screws (15), lockwashers (14), and elbow (13) from heater (3). Discard lockwashers (14).

b. Installation

1. Install elbow (13) on heater (3) with four new lockwashers (14) and screws (15).
2. Install adapter (20) on heater (3) with four new lockwashers (1) and screws (2).
3. Install heater (3) on two brackets (11) with four washers (10) and screws (9).
4. Install duct (8) on elbow (13) with clamp (12).
5. Install duct (22) on adapter (23) with clamp (24).
6. Install hose (6) on elbow (18) with clamp (7).
7. Install hose (5) on elbow (19) with clamp (4).
8. Connect lead (16) to wire (17).
9. Install wire (17) on heater (3) with clamp (20) and screw (21).

14-10. PERSONNEL HOT WATER HEATER AND MOUNTING BRACKET REPLACEMENT (Contd)

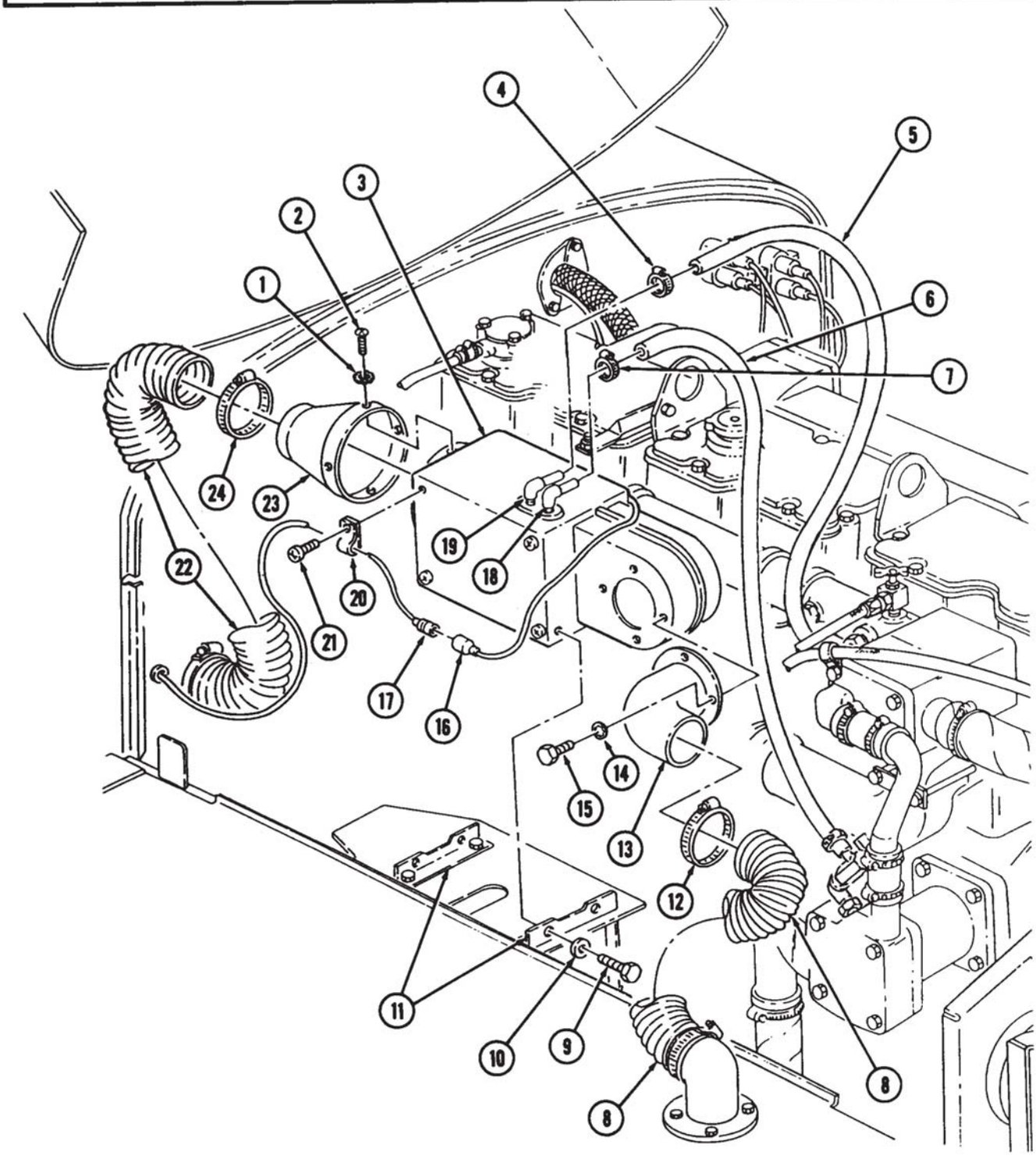

FOLLOW-ON TASKS:
- Connect battery ground cable (para. 4-48).
- Fill cooling system to proper level (para. 3-45).
- Raise right panel (TM 9-2320-260-10).

14-11. PERSONNEL HOT WATER HEATER HOSE REPLACEMENT

THIS TASK COVERS:

a. Removal **b. Installation**

INITIAL SETUP

APPLICABLE MODELS
All

MATERIALS/PARTS
Antiseize tape (Appendix C, Item 30)

REFERENCES (TM)
TM 9-2320-260-10
TM 9-2320-260-20P

EQUIPMENT CONDITION
- Parking brake set (TM 9-2320-260-10).
- Hood raised and secured (TM 9-2320-260-10).
- Lower right panel (TM 9-2320-260-10).
- Cooling system drained (para. 3-45).

a. Removal

NOTE

- Close water manifold and engine oil cooler valves prior to removal.
- Have drainage container ready to catch coolant.

1. Remove two clamps (12) and hose (13) from elbow (14) and engine oil cooler valve (8).
2. Remove two clamps (2) and hose (3) from elbow (1) and water manifold valve (6).
3. Remove water manifold valve (6), elbow (4), and bushing (5) from water manifold (7).
4. Remove engine oil cooler valve (8), elbow (11), and bushing (9) from engine oil cooler (10).
5. Remove elbows (1) and (14) from personnel hot water heater (15).

b. Installation

1. Apply anti seize tape to male threads of water manifold valve (6), engine oil cooler valve (8), two bushings (5) and (9), and elbows (4) and (11).
2. Install elbows (1) and (14) on personnel hot water heater (15).
3. Install bushing (9), elbow (11), and engine oil cooler valve (8) on engine oil cooler (10).
4. Install bushing (5), elbow (4), and water manifold valve (6) on water manifold (7).
5. Install hose (3) on elbow (1) and water manifold valve (6) with two clamps (2).
6. Install hose (15) on elbow (14) and engine oil cooler valve (8) with two clamps (12).

14-11. PERSONNEL HOT WATER HEATER HOSE REPLACEMENT (Contd)

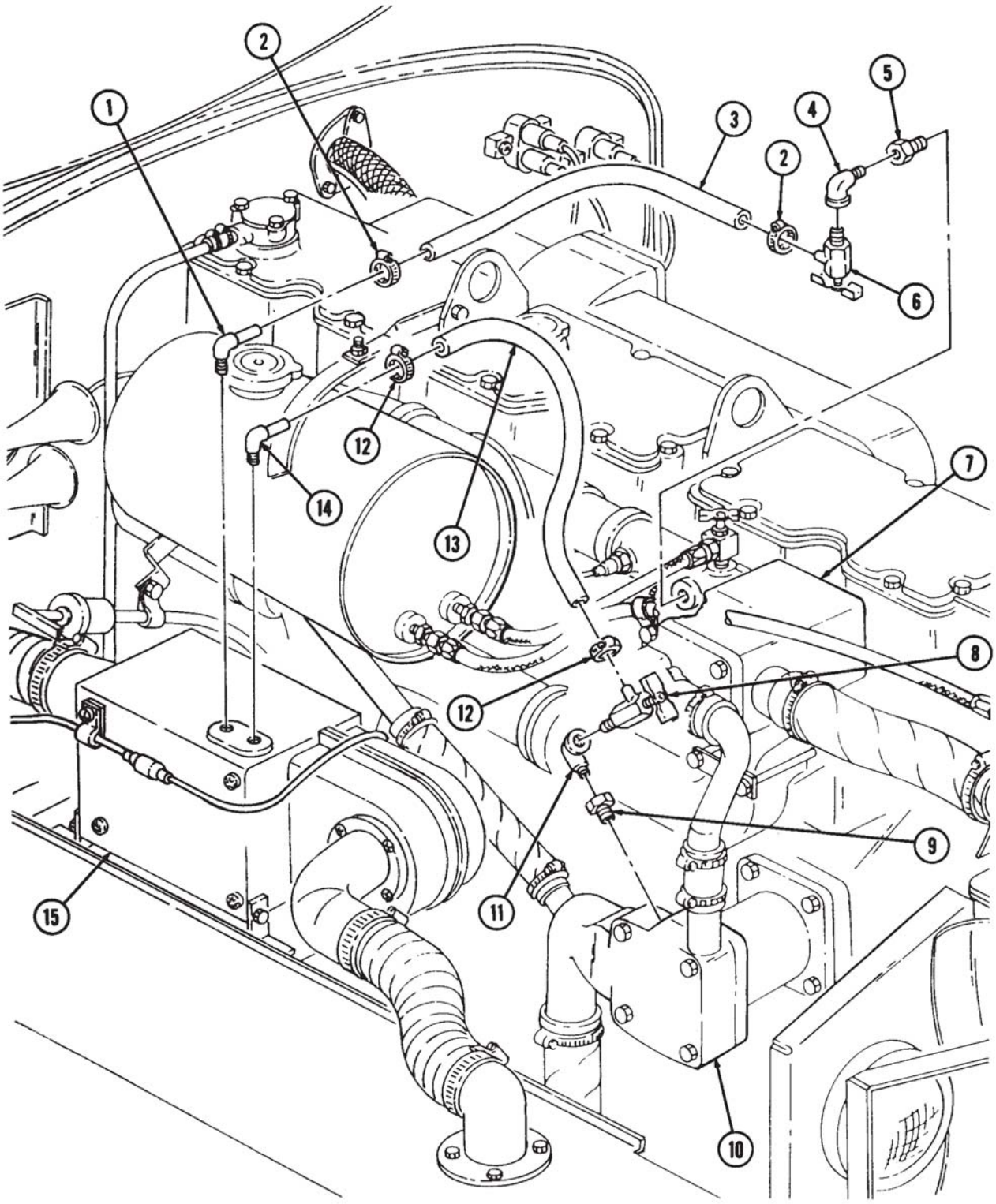

FOLLOW-ON TASKS: • Fill cooling system to proper level (para. 3-45).
• Raise lower right panel (TM 9-2320-260-10).

14-12. PERSONNEL HEATER CONTROL CABLES REPLACEMENT

THIS TASK COVERS:

a. Removal **b. Installation**

INITIAL SETUP

APPLICABLE MODELS
All

MATERIALS/PARTS
Two lockwashers
Two locknuts

REFERENCES (TM)
TM 9-2320-260-10
TM 9-2320-260-20P

EQUIPMENT CONDITION
Parking brake set (TM 9-2320-260-10).

a. Removal

1. Remove screw (16), clamp (15), nut (4), and control cable (12) from bracket (3) and rod (14) on diverter (13).
2. Remove screw (8), clamp (9), nut (5), and control cable (11) from bracket (6) and rod (7) on diverter adapter (10).
3. Loosen two nuts (2), pull control cables (11) and (12) from bracket (19), and remove two nuts (2) and lockwashers (17). Discard lockwashers (17).
4. Remove two locknuts (18), screws (1), and bracket (19) from instrument panel (20). Discard locknuts (18).

b. Installation

1. Install bracket (19) on instrument panel (20) with two screws (1) and new locknuts (18).
2. Insert control cables (11) and (12) through holes in bracket (19) and install with two new lockwashers (17) and nuts (2).
3. Install control cable (11) on rod (7) of diverter adapter (10) and bracket (6) with clamp (9), screw (8), and nut (5).
4. Install control cable (12) on rod (14) of diverter (13) and bracket (3) with clamp (15), screw (16), and nut (4).

14-12. PERSONNEL HEATER CONTROL CABLES REPLACEMENT (Contd)

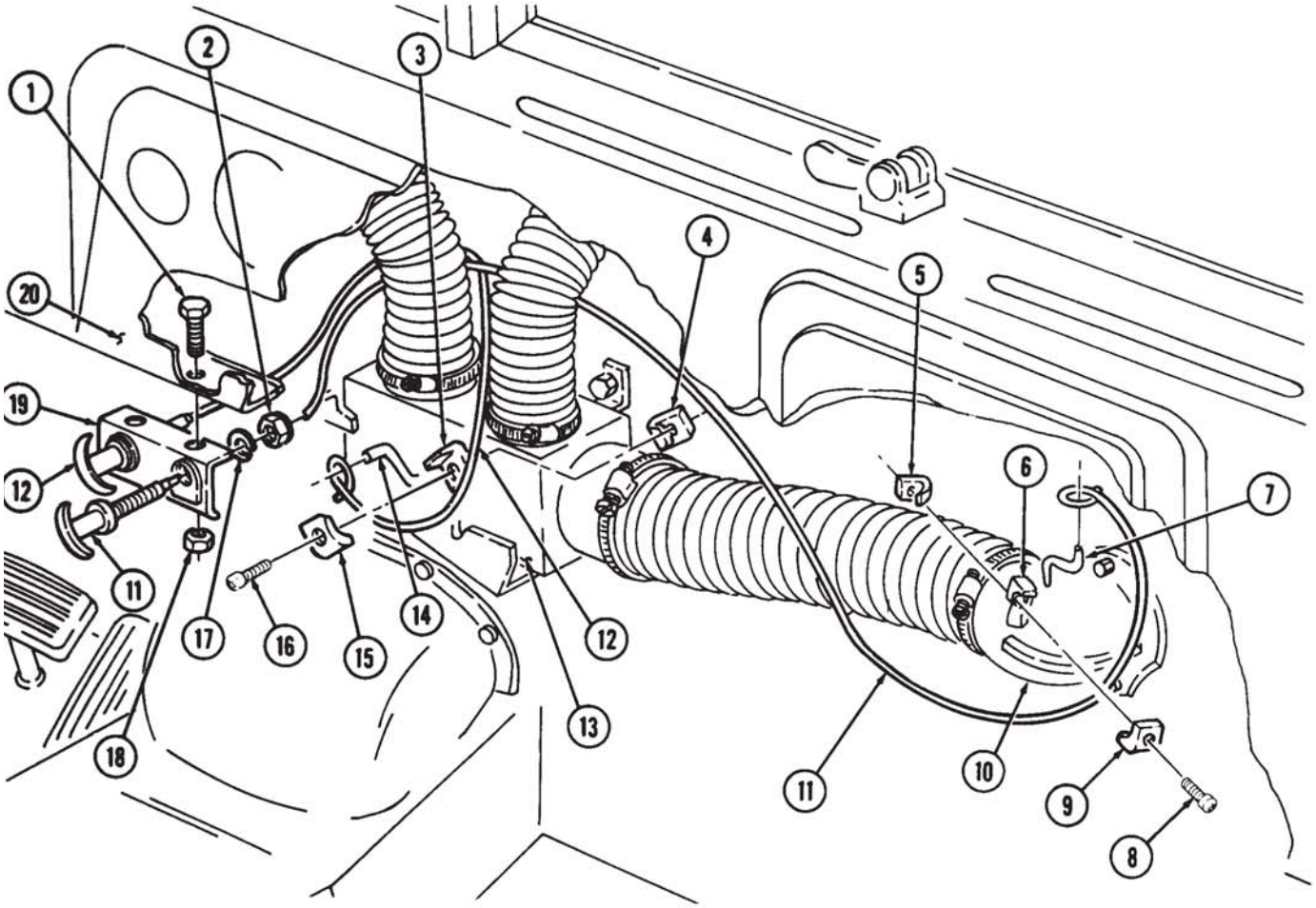

14-13. CONTROL SWITCH, RESISTOR, AND LEADS REPLACEMENT

THIS TASK COVERS:

a. Removal **b. Installation**

INITIAL SETUP

APPLICABLE MODELS
All

MATERIALS/PARTS
Six lockwashers
Two locknuts

REFERENCES (TM)
TM 9-2320-260-10
TM 9-2320-260-20P

EQUIPMENT CONDITION
- Parking brake set (TM 9-2320-260-10).
- Hood raised and secured (TM 9-2320-260-10).
- Battery ground cable disconnected (para. 4-48).

a. Removal

1. Remove nut (1), lockwasher (2), locking ring (3), data plate (4), control switch (12), and nut (15) from bracket (6). Discard lockwasher (2).

NOTE

Tag all leads for installation.

2. Remove three screws (8), lockwashers (9), and four leads (10), (11), (13), and (14) from control switch (12). Discard lockwashers (9).
3. Remove two locknuts (16), screws (5), and bracket (6) from instrument panel (20). Discard locknuts (16).
4. Remove two screws (19), lockwashers (18), and resistor (17) from firewall (7). Discard lockwashers (18).
5. Disconnect lead (13) from connector (22) and remove lead (13) from grommet (21) in firewall (7).
6. Disconnect lead (11) from wire (24).
7. Remove screw (26), clamp (25), and lead (11) from heater (23).
8. Remove grommet (27) and lead (11) from firewall (7).

b. Installation

1. Connect lead (11) to wire (24) and insert lead (11) through hole in firewall (7).
2. Install lead (11) and clamp (25) on heater (23) with screw (26).
3. Place grommet (27) around lead (11) and install lead (11) in firewall (7).
4. Connect lead (13) to connector (22) and insert lead (13) through grommet (21) in firewall (7).
5. Install resistor (17) on firewall (7) with two new lockwashers (18) and screws (19).
6. Install four leads (10), (11), (13), and (14) on control switch (12) with three new lockwashers (9) and screws (8).
7. Install bracket (6) on instrument panel (20) with two screws (5) and new locknuts (16).
8. Install nut (15), control switch (12), data plate (4), and locking ring (3) on bracket (6) with new lockwasher (2) and nut (1).

14-13. CONTROL SWITCH, RESISTOR, AND LEADS REPLACEMENT (Contd)

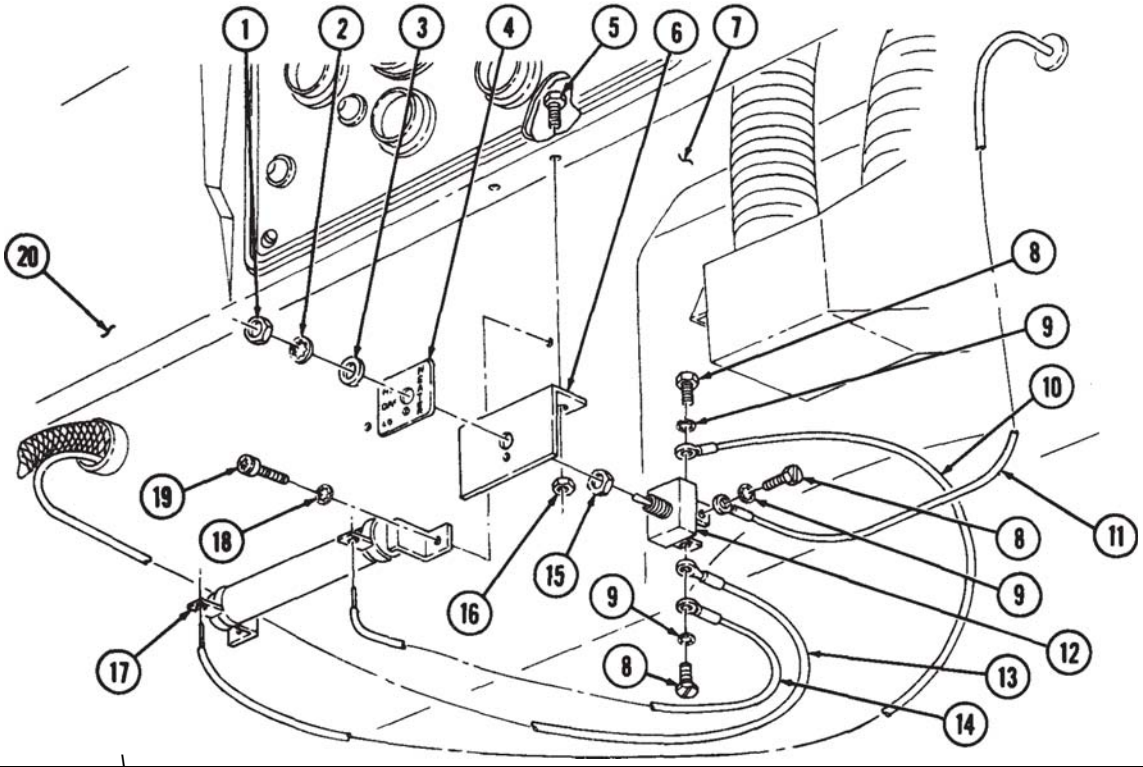

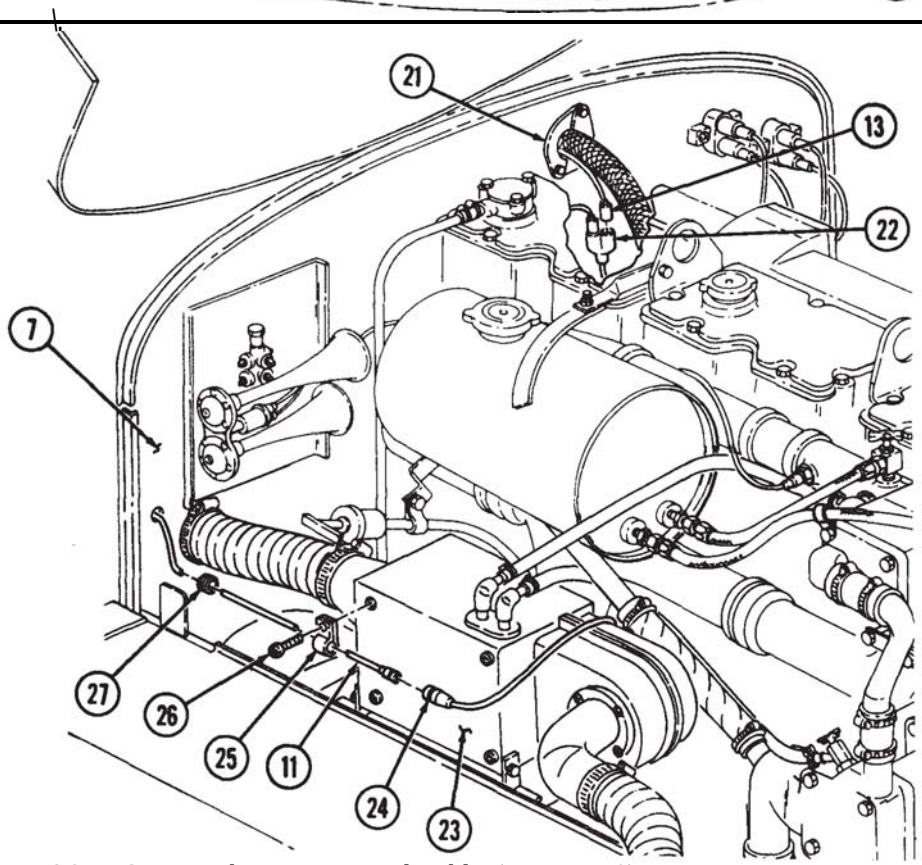

FOLLOW-ON TASK: Connect battery ground cable (para. 4-48).

14-14. ENGINE COOLANT HEATER AND MOUNTING BRACKET REPLACEMENT

THIS TASK COVERS:

a. Removal **b. Installation**

INITIAL SETUP

APPLICABLE MODELS
All

MATERIALS/PARTS
Ten locknuts
Lockwasher
Cotter pin

REFERENCES (TM)
TM 9-2320-260-10
TM 9-2320-260-20P

EQUIPMENT CONDITION
- Parking brake set (TM 9-2320-260-10).
- Battery ground cable disconnected (para. 4-48).

a. Removal

NOTE

- Close fuel valve, heater-battery box valve, water manifold valve, and engine oil cooler valve prior to removal.
- Have drainage container ready to catch coolant and fuel.

1. Disconnect fuel line (21) from elbow (22).
2. Remove locknut (6), lockwasher (5), screw (2), and two ground leads (3) and (7) from frame (4). Discard locknut (7) and lockwasher (5).
3. Remove cotter pin (9) and exhaust tube (8) from heater (1). Discard cotter pin (9).
4. Remove two safety pins (16), release two handles (15), and pull battery box (14) onto running board (13).
5. Loosen clamp (18) and remove hose (17) from pump elbow (12).
6. Loosen clamp (25) and remove hose (26) from heater-battery box valve (23).
7. Remove nut (11), wire (10), nut (19), and ground lead (7) from pump (20).
8. Disconnect harness (24) from heater (1) and remove battery box (14) from running board (13).

14-14. ENGINE COOLANT HEATER AND MOUNTING BRACKET REPLACEMENT (Contd)

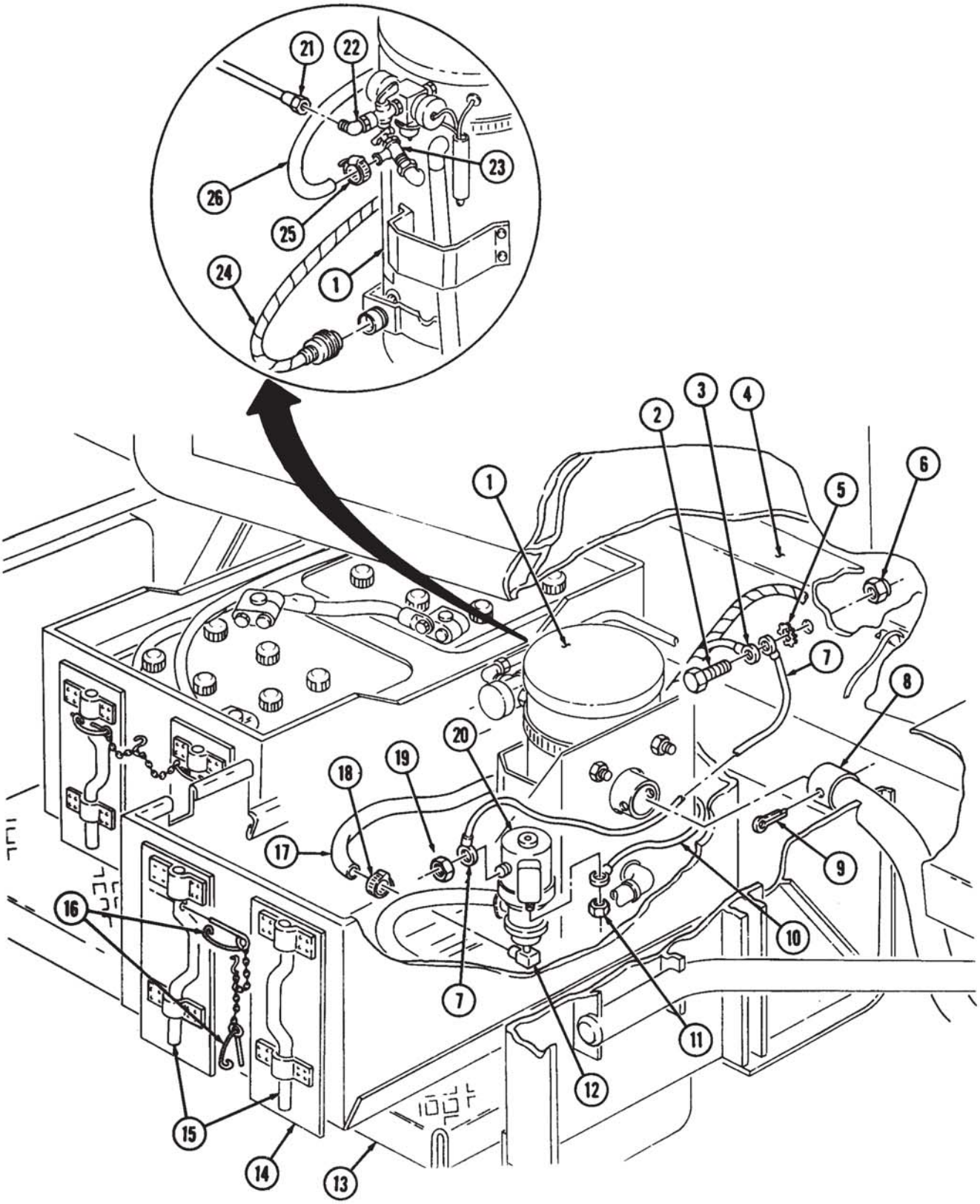

14-14. ENGINE COOLANT HEATER AND MOUNTING BRACKET REPLACEMENT (Contd)

9. Remove three locknuts (9), screws (12), washers (8), two locknuts (18), screws (13), and heater (3), with mounting bracket (6), from battery box (14). Discard locknuts (9) and (18).
10. Remove clamp (16) and hose (19) from heater-pump valve (15).
11. Remove heater-pump valve (15), reducer (17), pipe (11), and elbow (10) from heater (3).
12. Remove two clamps (2) and heater (3) from two mounts (5).
13. Remove heater-battery box valve (1), bushing (22), and elbow (21) from heater (3).
14. Remove elbow (23) and fuel shutoff valve (24) from heater (3).
15. Remove four locknuts (7), screws (4), and two mounts (5) from mounting bracket (6). Discard locknuts (7').

NOTE

If mounting bracket is to be replaced, perform step 16.

16. Remove heater pump (20) (para. 14-15).

b. Installation

NOTE

Perform step 1 if mounting bracket was removed.

1. Install heater pump (20) (para. 14-15).
2. Install two mounts (5) on mounting bracket (6) with four screws (4) and new locknuts (7).
3. Apply antiseize tape to male threads of fuel shutoff valve (24), elbows (23) and (10), pipe (11), and heat pump valve (15).
4. Install fuel shutoff valve (24) and elbow (23) on heater (3).
5. Install elbow (21), bushing (22), and heater-battery box valve (1) on heater (3).
6. Install heater (3) on two mounts (5) with two clamps (2).
7. Install elbow (10), pipe (11), reducer (17), and heater-pump valve (15) on heater (3).
8. Install hose (19) on heater-pump valve (15) with clamp (16).
9. Install heater (3), with mounting bracket (6), in battery box (14) with two screws (13), new locknuts (18), three screws (12), washers (8), and new locknuts (9).
10. Place battery box (14) on running board (36).
11. Install ground lead (30) and wire (33) on pump (20) with nuts (41) and (34).
12. Install hose (45) on heater-battery box valve (1) with clamp (44).
13. Install hose (39) on pump elbow (35) with clamp (40).
14. Push battery box (14) into storage position and install two safety pins (38) in handles (37).
15. Connect exhaust tube (31) on heater (3) with new cotter pin (32).
16. Install ground leads (30) and (26) on frame (27) with screw (25), new lockwasher (28), and new locknut (29).
17. Connect harness (43) to heater (3).
18. Connect fuel line (42) to elbow (23).

NOTE

open fuel valve, heater-battery box valve, water manifold valve, and engine oil cooler valve.

14-14. ENGINE COOLANT HEATER AND MOUNTING BRACKET REPLACEMENT (Contd)

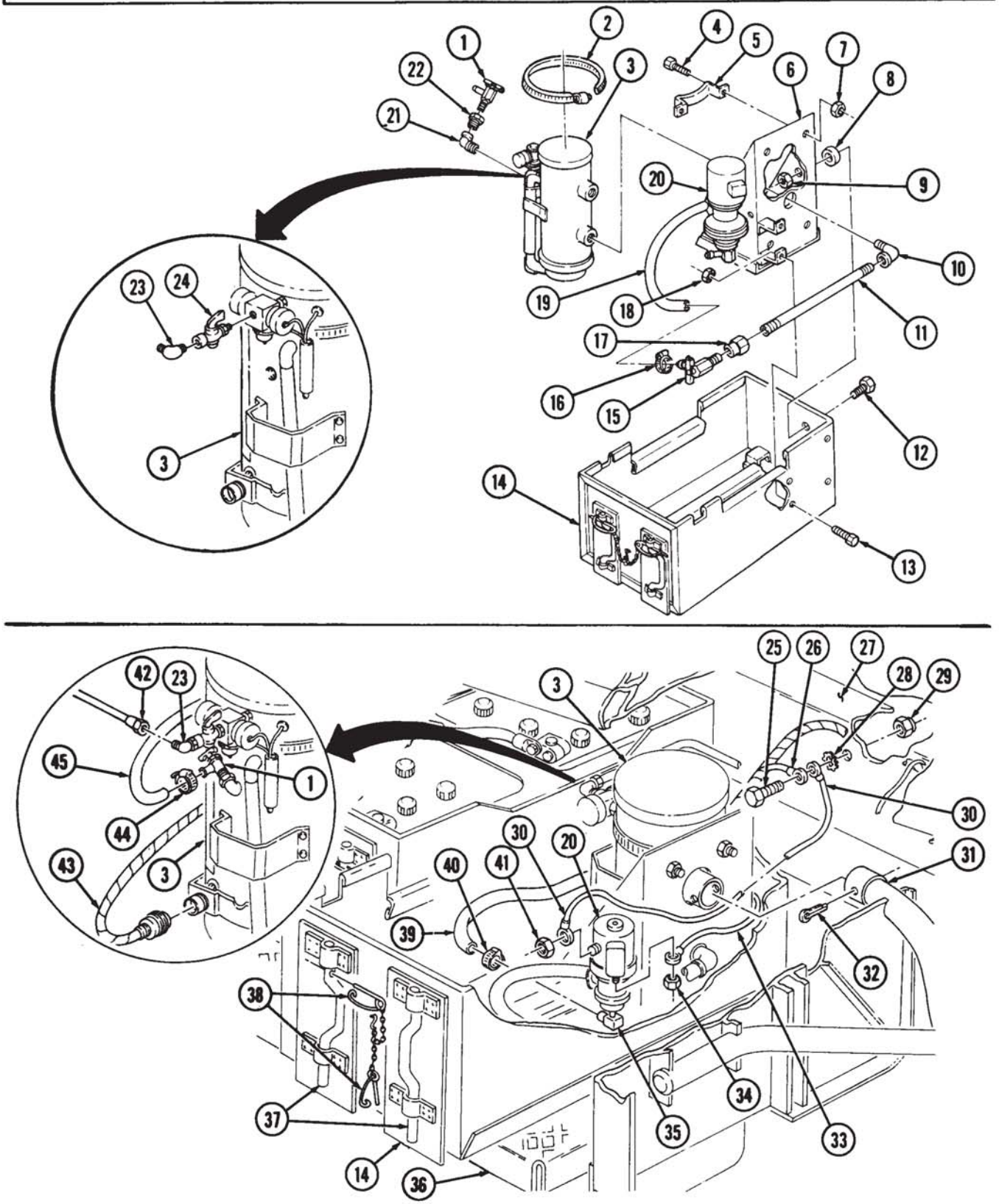

FOLLOW-ON TASK: Connect battery ground cable (para. 4-48).

14-15. COOLANT HEATER PUMP AND MOUNTING BRACKET REPLACEMENT

THIS TASK COVERS:

a. Removal **b. Installation**

INITIAL SETUP

APPLICABLE MODELS
All

MATERIALS/PARTS
Five locknuts
Three lockwashers
Cotter pin
Antiseize tape (Appendix C, Item 30)

REFERENCES (TM)
TM 9-2320-260-10
TM 9-2320-260-20P

EQUIPMENT CONDITION
- Parking brake set (TM 9-2320-260-10).
- Battery ground cable disconnected (para. 4-48).

a. Removal

NOTE

Close engine oil cooler and heater pump valves prior to removal.

1. Disconnect fuel line (1) from elbow (2).
2. Disconnect harness (4) from heater (3).
3. Remove locknut (20), screw (16), ground leads (17) and (21), and lockwasher (19) from frame (18). Discard locknut (20) and lockwasher (19).
4. Remove cotter pin (24) and exhaust tube (23) from heater (3). Discard cotter pin (24).
5. Remove two safety pins (32), release handles (31), and pull battery box (30) onto running board (29).

NOTE

Have drainage container ready to catch coolant.

6. Remove clamp (27) and hose (28) from elbow (33).
7. Remove clamp (6) and hose (5) from adapter (7).
8. Remove nuts (8) and (26), wire (9), and ground lead (21) from pump (10).
9. Remove clamp (11) and pump (10) from mount (35).
10. Remove adapter (7) and elbow (33) from pump (10).
11. Remove two locknuts (25), screws (12), and bracket (13) from heater mounting bracket (22). Discard locknuts (25).
12. Remove two locknuts (15), lockwashers (14), screws (34), and mount (35) from bracket (13). Discard locknuts (15) and lockwashers (14).

b. Installation

1. Install mount (35) on bracket (13) with two screws (34), new lockwashers (14), and locknuts (15).
2. Install bracket (13), with mount (35), on heater mounting bracket (22) with two screws (12) and new locknuts (25).
3. Apply antiseize tape to male threads of adapter (7) and elbow (33).
4. Install adapter (7) and elbow (33) on pump (10).
5. Install pump (10) on mount (35) with clamp (11).
6. Install wire (9) and ground lead (21) on pump (10) with nuts (8) and (26).
7. Install hose (5) on adapter (7) with clamp (6).

14-15. COOLANT HEATER PUMP AND MOUNTING BRACKET REPLACEMENT (Contd)

8. Install hose (28) on elbow (33) with clamp (27).
9. Push battery box (30) from running board (29) and into stowage position. Insert two safety pins (32) in release handles (31).
10. Install exhaust tube (23) on heater (3) with new cotter pin (24).
11. Install ground leads (21) and (17) on frame (18) with new lockwasher (19), screw (16), and new locknut (20).
12. Connect harness (4) to heater (3).
13. Connect fuel line (1) to elbow (2).

NOTE

Open engine oil cooler and heater pump valves.

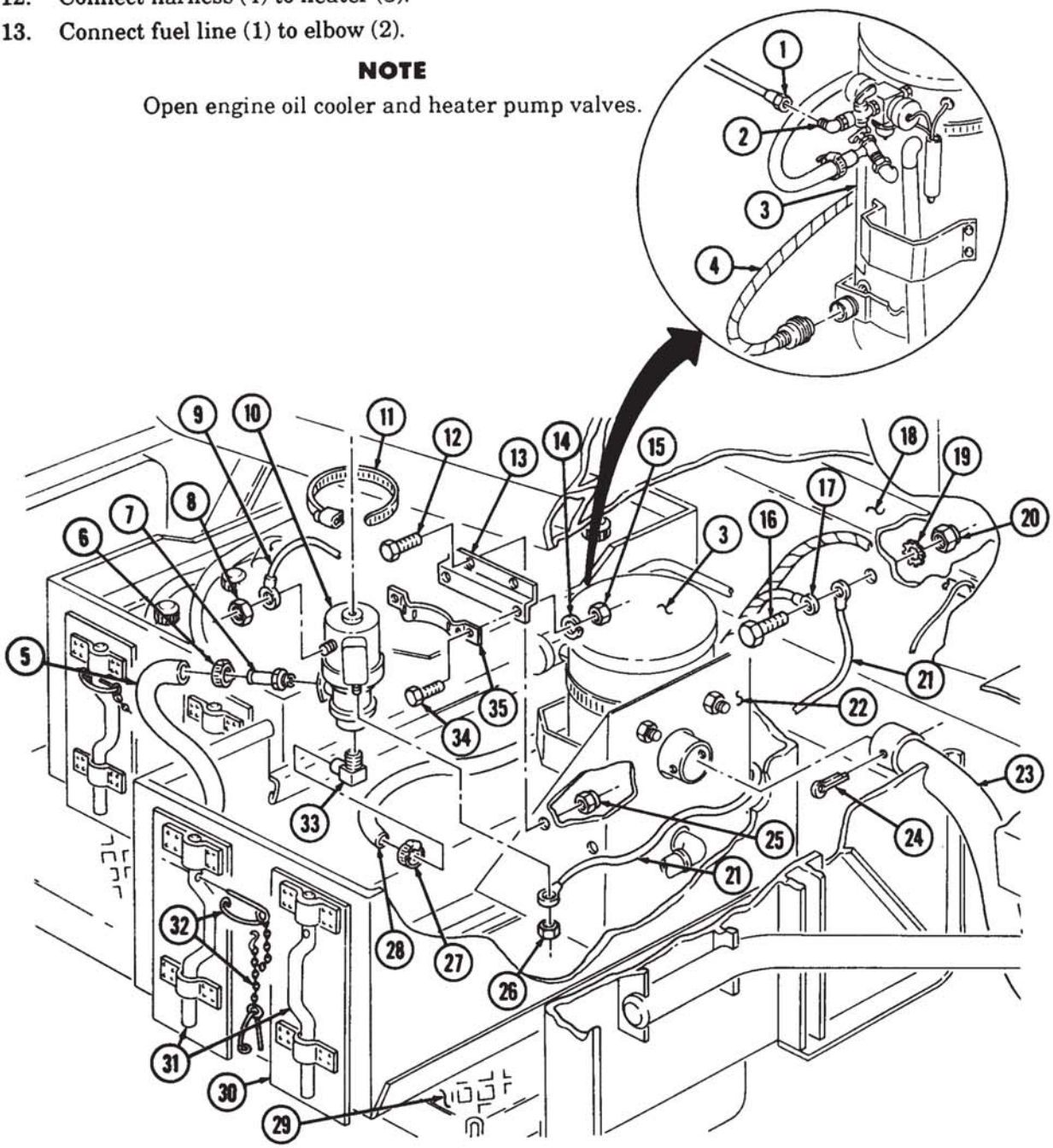

FOLLOW-ON TASK: Connect battery ground cable (para. 4-48).

14-16. ENGINE COOLANT HEATER HOSES REPLACEMENT

THIS TASK COVERS:

a. Removal **b. Installation**

INITIAL SETUP

APPLICABLE MODELS
All

MATERIALS/PARTS
Seven locknuts

REFERENCES (TM)
TM 9-2320-260-10
TM 9-2320-260-20P

EQUIPMENT CONDITION
- Parking brake set (TM 9-2320-260-10).
- Hood raised and secured (TM 9-2320-260-10).

a. Removal

NOTE

- Close water manifold, engine oil cooler, and heater-battery box valves prior to removal.
- Have drainage container ready to catch coolant.

1. Loosen clamp (12) and disconnect hose (11) from water manifold valve (13).
2. Loosen clamp (15) and disconnect hose (14) from engine oil cooler valve (16).
3. Loosen clamp (24) and disconnect hose (14) from pump elbow (23).
4. Loosen clamp (27) and disconnect hose (28) from heater-battery box valve (26).
5. Loosen two clamps (31) and disconnect hoses (28) and (32) from lower battery heater pad (30).
6. Loosen clamps (22) and (1) and disconnect hoses (32) and (11) from upper battery heater pad (2).
7. Remove two locknuts (29), screws (33), clamps (34), bracket (35), and hoses (28) and (32) from battery box (25). Discard locknuts (29).
8. Remove two locknuts (20), screws (17), clamps (19), and hose (14) from brackets (18). Discard locknuts (20).

NOTE

Assistant will help with steps 9 and 10.

9. Remove two locknuts (21), clamps (3), screws (4), and hose (11) from front and intermediate cab tunnels (5) and (6). Discard locknuts (21).
10. Remove locknut (7), screw (10), clamp (9), and hose (11) from firewall (8). Discard locknut (7).

14-16. ENGINE COOLANT HEATER HOSES REPLACEMENT (Contd)

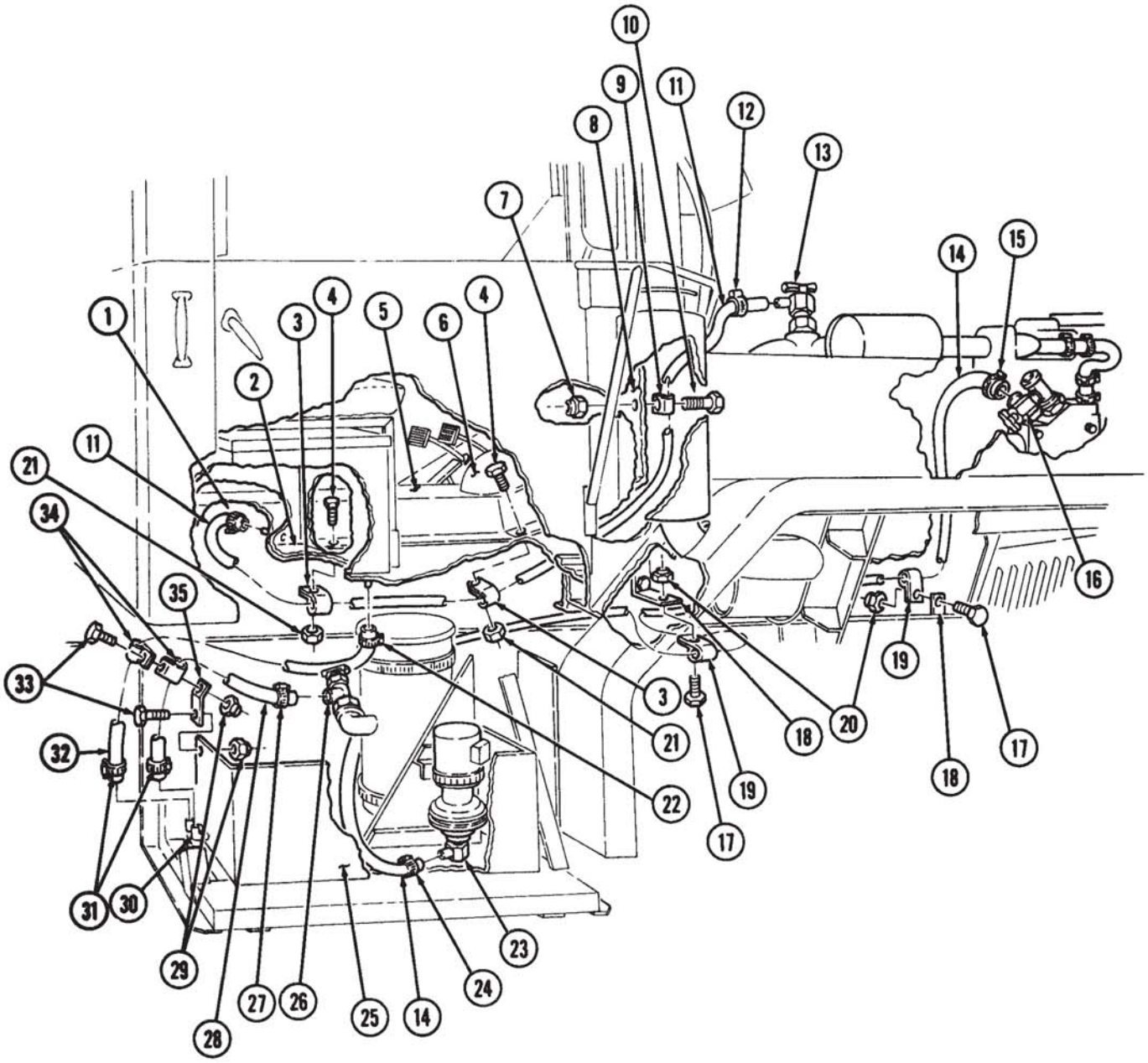

14-16. ENGINE COOLANT HEATER HOSES REPLACEMENT (Contd)

b. Installation

1. Install hose (11) on water manifold valve (13) and tighten clamp (12).
2. Install hose (14) on engine oil cooler valve (16) and tighten clamp (15).
3. Route hose (14) along frame brackets (18) and install on pump elbow (23). Tighten clamp (24).
4. Route hose (11) through hole in cab tunnel (5) and install on upper battery heater pad (2). Tighten clamp (1).
5. Install hoses (28) and (32) on lower battery heater pad (30) and tighten two clamps (31).
6. Install hose (32) on upper battery heater pad (2) and tighten clamp (22).
7. Install hose (28) on heater-battery box valve (26) and tighten clamp (27).
8. Install hoses (28) and (32) on battery box (25) with bracket (35), two clamps (34), screws (33), and new locknuts (29).
9. Install hose (14) on brackets (18) with two clamps (19), screws (17), and new locknuts (20).
10. Install hose (11) on cab tunnel (5) and clutch housing (6) with two clamps (3), screws (4), and new locknuts (21).

NOTE

Assistant will help with step 11.

11. Install hose (11) on firewall (8) with clamp (9), screw (10), and new locknut (7).

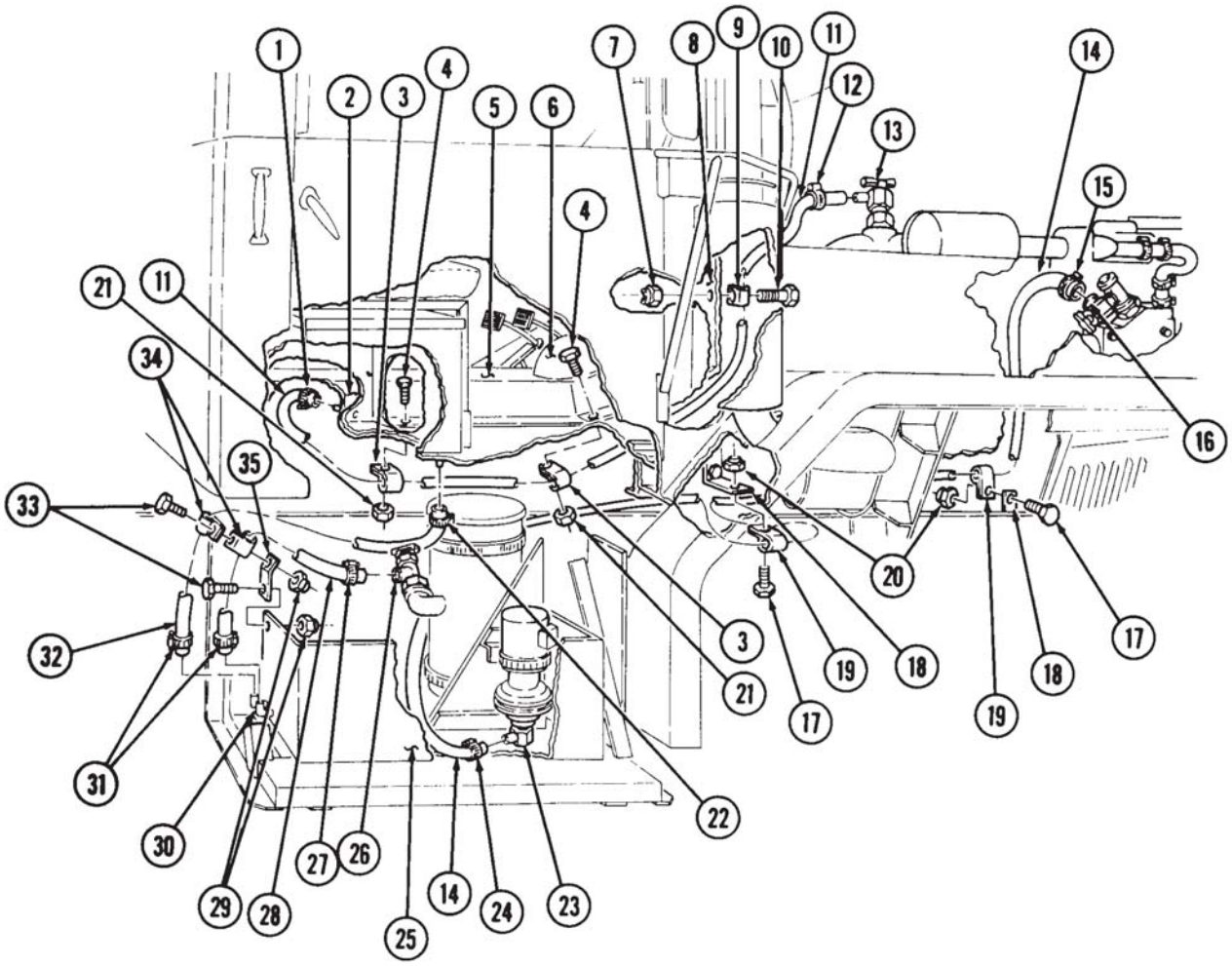

14-17. ENGINE COOLANT BATTERY BOX HEATER PAD REPLACEMENT

THIS TASK COVERS:

a. Removal **b. Installation**

INITIAL SETUP

APPLICATION MODELS
All

REFERENCES (TM)
TM 9-2320-260-10
TM 9-2320-260-20P

EQUIPMENT CONDITION
- Parking brake set (TM 9-2320-260-10).
- Companion seat cushion removed (upper pad only) (para. 11-31).
- Batteries removed (para. 4-49).

NOTE

The upper and lower battery box heater pads are replaced basically the same. This procedure covers the upper battery box heater pad only.

a. Removal

NOTE

- Close water manifold valve prior to removal.
- Have drainage container ready to catch coolant.

1. Loosen two clamps (3) and remove exhaust inlet hose (4) and outlet hose (2) from heater pad (1).
2. Remove heater pad (1) from battery box (5).

b. Installation

1. Install heater pad (1) in battery box (5).
2. Install exhaust inlet hose (4) and outlet hose (2) on heater pad (1) and tighten clamps (3).

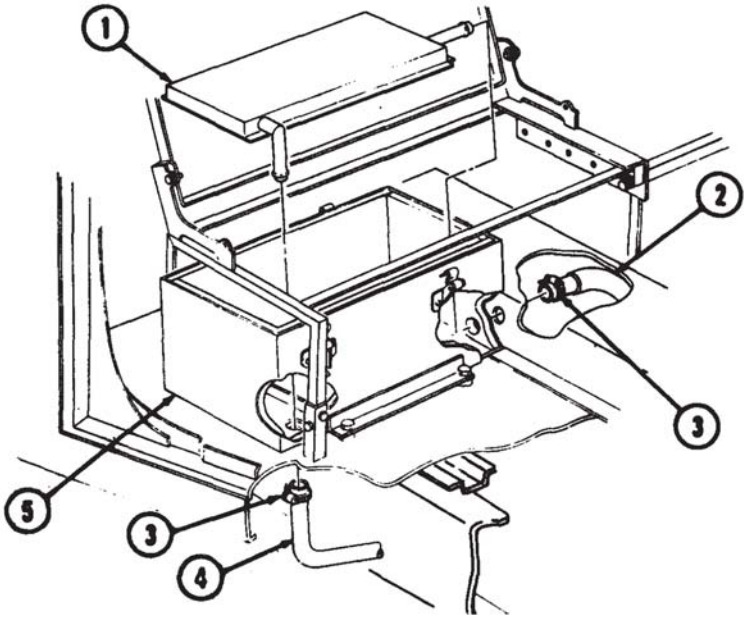

FOLLOW-ON TASKS:
- Install batteries (para. 4-49).
- Install companion cushion seat (upper pad only), if removed (para. 11-31).

14-18. ENGINE COOLANT HEATER HARNESS REPLACEMENT

THIS TASK COVERS:

a. Removal **b. Installation**

INITIAL SETUP

APPLICABLE MODELS
All

MATERIALS/PARTS
Two locknuts
Lockwasher
Cotter pin

REFERENCES (TM)
TM 9-2320-260-10
TM 9-2320-260-20P

EQUIPMENT CONDITION
- Parking brake set (TM 9-2320-260-10).
- Hood raised and secured (TM 9-2320-260-10).
- Battery ground cable disconnected (para. 4-48).

GENERAL SAFETY INSTRUCTIONS
Do not perform this task when exhaust system is hot.

WARNING

Do not touch hot exhaust system components with bare hands. Injury to personnel may result.

a. Removal

1. Disconnect harness (1) from heater (2).
2. Remove two safety pins (27), release handles (28), and pull battery box (26) onto running board (24).
3. Remove nut (23) and wire (22) from pump (25).
4. Remove locknut (9), screw (3), lockwasher (7), and ground cables (4) and (6) from frame (13). Discard locknut (9) and lockwasher (7).
5. Disconnect wire (8) from connector (5).
6. Disconnect harness (1) from control box (11).
7. Remove grommet (14) and harness (1) from firewall (12).
8. Remove locknut (10), screw (21), washer (20), clamp (16), and harness (1) from frame (13). Discard locknut (10).
9. Remove screw (19), washer (18), clamp (17), and harness (1) from cab support (15).

b. Installation

1. Thread harness (1) through hole in firewall (12) and connect to control box (11).
2. Connect wire (8) to connector (5).
3. Connect harness (1) to heater (2).
4. Install wire (22) on pump (25) with nut (23).
5. Install ground cables (6) and (4) on frame (13) with screw (3), new lockwasher (7), and new locknut (9).
6. Place grommet (14) around harness (1) and wire (8) and install on firewall (12).
7. Install harness (1) on frame (13) with clamp (16), new washer (20), screw (21), and new locknut (10).
8. Install harness (1) on cab support (15) with clamp (17), washer (18), and screw (19).
9. Push battery box (26) back into stowed position on running boards (24) and install two safety pins (27) in handles (28).

14-18. ENGINE COOLANT HEATER HARNESS REPLACEMENT (Contd)

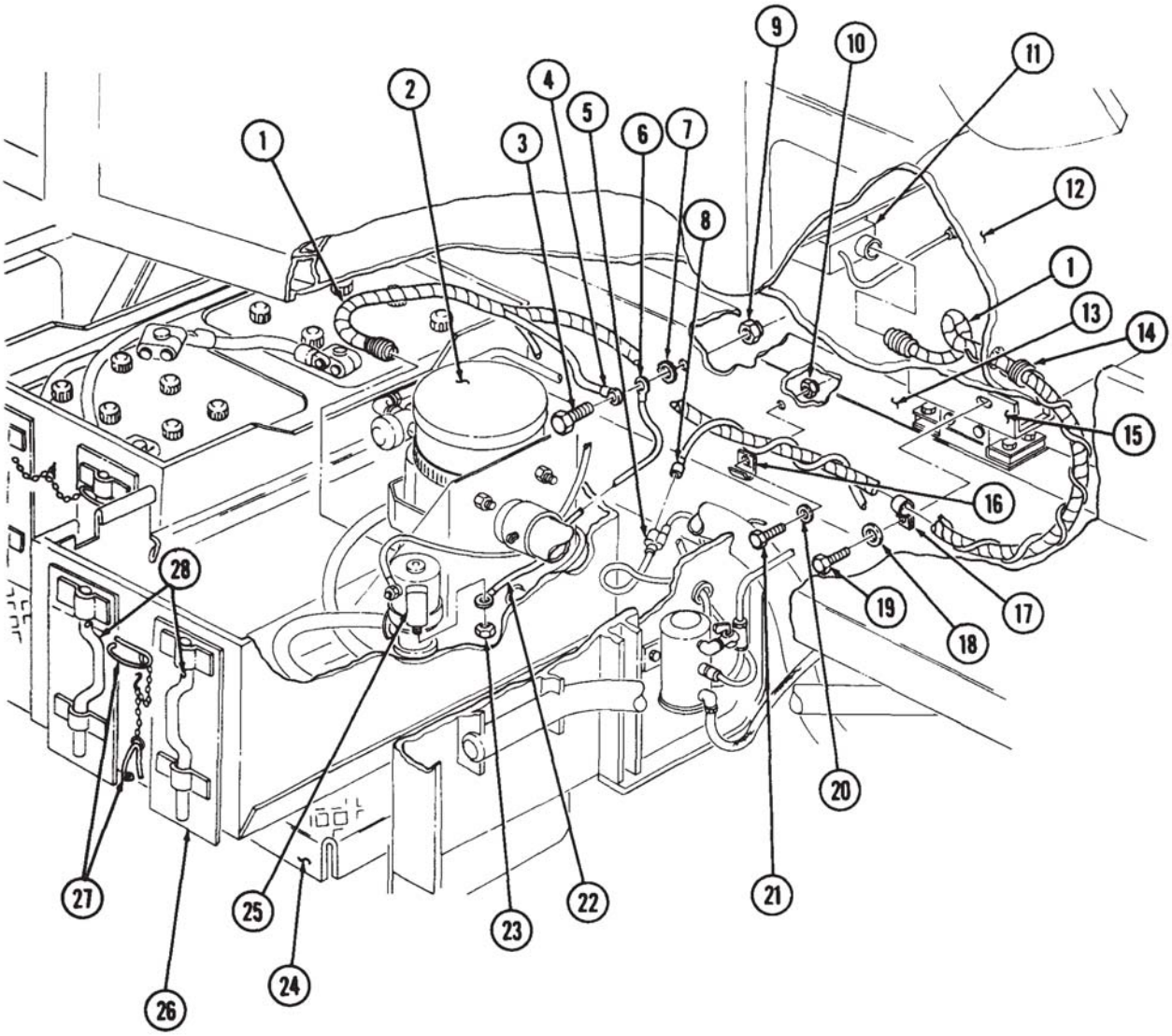

FOLLOW-ON TASK: Connect battery ground cable (para. 4-48).

14-19. OIL PAN SHROUD AND EXHAUST TUBE REPLACEMENT

THIS TASK COVERS:

a. Removal **b. Installation**

INITIAL SETUP

APPLICABLE MODELS
All

MATERIALS/PARTS
Five locknuts
Two cotter pins

REFERENCES (TM)
TM 9-2320-260-10
TM 9-2320-260-20P

EQUIPMENT CONDITION
Parking brake set (TM 9-2320-260-10).

GENERAL SAFETY INSTRUCTIONS
Do not perform this task when exhaust system is hot.

WARNING

Do not touch hot exhaust system components with bare hands.
Injury to personnel may result.

a. Removal

1. Remove two cotter pins (7) and exhaust tube (8) from heater (11) and oil pan shroud (4). Discard cotter pins (7).
2. Remove locknut (2), screw (1), clamp (10), and exhaust tube (8) from crossmember (9). Discard locknut (2).
3. Remove four locknuts (6), washers (5), and oil pan shroud (4) from engine oil pan (3). Discard locknuts (6).

b. Installation

1. Install oil pan shroud (4) on engine oil pan (3) with four washers (5) and new locknuts (6).
2. Install exhaust tube (8) on heater (11) and oil pan shroud (4) with two new cotter pins (7).
3. Install exhaust tube (8) on crossmember (9) with clamp (10), screw (1), and new locknut (2).

14-19. OIL PAN SHROUD AND EXHAUST TUBE REPLACEMENT (Contd)

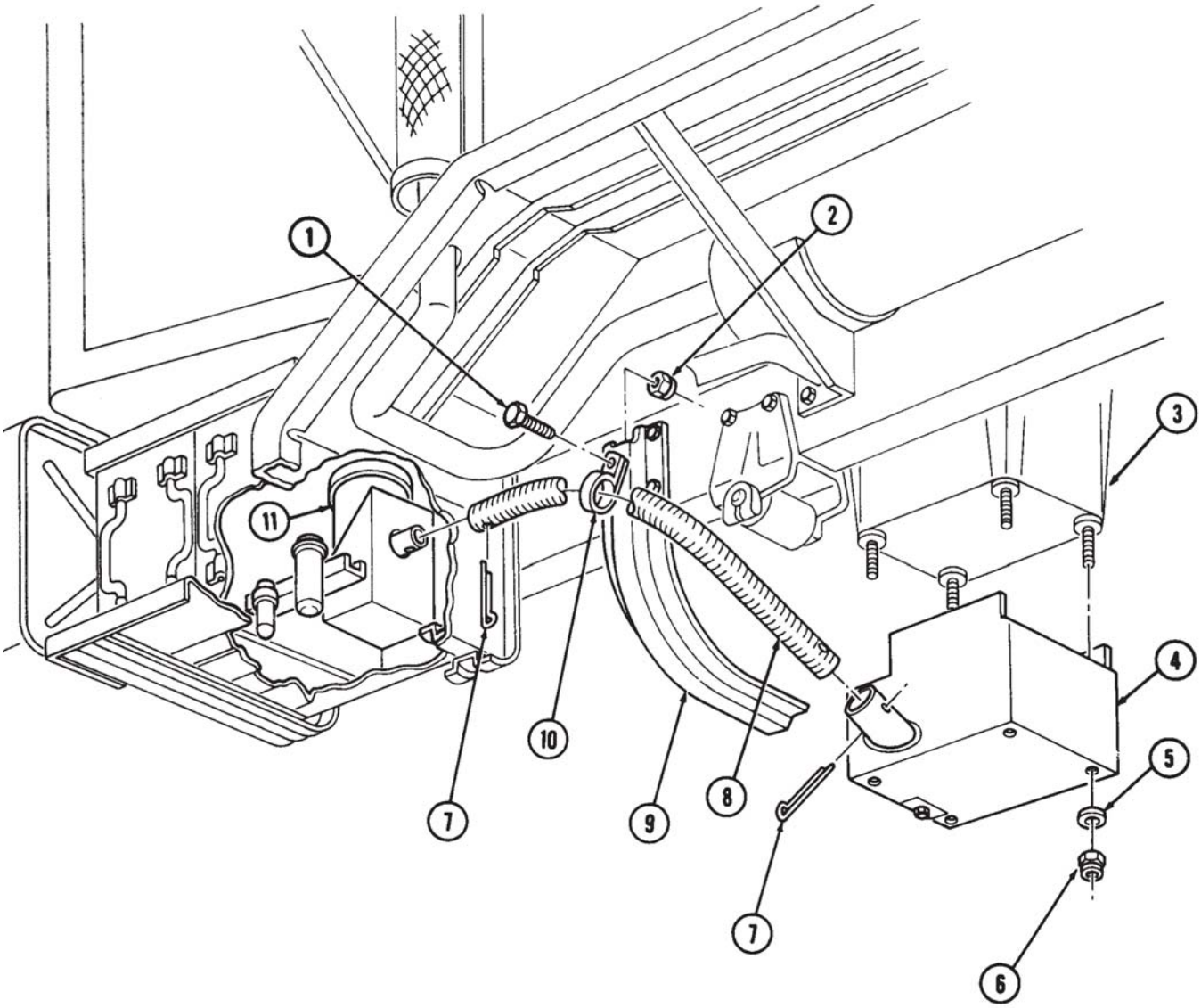

14-20. THERMAL BARRIER INSULATION REPLACEMENT

THIS TASK COVERS:

a. Removal **b. Installation**

INITIAL SETUP

APPLICABLE MODELS
All

MATERIALS/PARTS
Adhesive (Appendix C, Item 21)

REFERENCES (TM)
TM 9-2320-260-10
TM 9-2320-260-20P

EQUIPMENT CONDITION
- Parking brake set (TM 9-2320-260-10).
- Driver's seat removed (para. 11-32).
- . Companion seat removed (para. 11-31).

NOTE

All thermal barrier insulation is replaced the same way. This procedure covers the left rear upper insulation panel only.

a. Removal

1. Pull panel (2) away from cab interior (1). Discard panel (2) if irreparable damage occurs when removing.
2. Clean all remaining insulating material and adhesive from contact surface areas.

b. Installation

CAUTION

Once panel is coated with methyl-ethyl-ketone adhesive and put in place, it cannot be moved. Be careful not to place panel in the wrong position.

NOTE

Make all necessary cutouts and slits in panel before installation. Shiny side of panel must face outward.

1. Place panel (2) in cab interior (1) to check for fit.
2. Remove panel (2) and coat contact areas with adhesive.
3. Install panel (2) on cab (1) and press panel (2) firmly into place.

14-20. THERMAL BARRIER INSULATION REPLACEMENT (Contd)

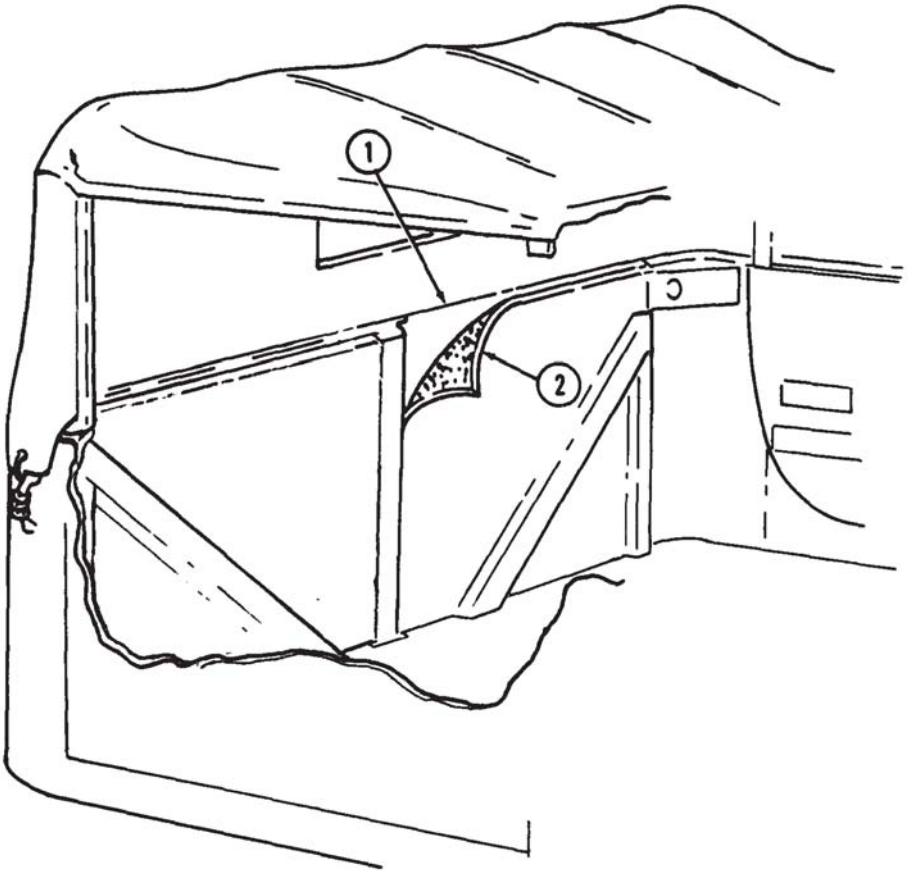

FOLLOW-ON TASKS: • Install driver's seat (para. 11-32).
• Install companion seat (para. 11-31).

14-21. HOOD AND RADIATOR COVER REPLACEMENT

THIS TASK COVERS:

a. Removal **b. Installation**

INITIAL SETUP

APPLICABLE MODELS
All

REFERENCES (TM)
TM 9-2320-260-10
TM 9-2320-260-20P

EQUIPMENT CONDITION
- Parking brake set (TM 9-2320-260-10).
- Air cleaner removed (para. 3-15).

a. Removal

1. Remove three retaining springs (7) from front fender (12) and side panel loops (11). Repeat for opposite side.
2. Unfasten buckles (3) and pull straps (1) through loops (2).
3. Unfasten buckle (6) and pull strap (4) through loops (5). Repeat for opposite side.
4. Remove radiator cover (8) from brushguard (9).
5. Unfasten buckles (15) and pull straps (14) through loops (13). Repeat for opposite side.
6. Remove hood cover (16) from hood (10).
7. Unfasten buckles (20) and pull straps (19) through loops (18).
8. Remove side panel cover (17) from side panel (21). Repeat for opposite side.

b. Installation

1. Install side panel cover (17) on side panel (21) and insert loops (18) through cover (17).
2. Thread straps (19) through loops (18) and fasten buckles (20). Repeat for opposite side.
3. Install hood cover (16) on hood (10) and insert loops (13) through cover (16).
4. Thread straps (14) through loops (13) and fasten buckles (15). Repeat for opposite side.
5. Install radiator cover (8) on brush guard (9) and insert loops (2) and (5) through cover (8).
6. Thread straps (1) through loops (2) and fasten buckles (3).
7. Thread strap (4) through loops (5) and fasten buckle (6). Repeat for opposite side.
8. Install three retaining springs (7) on front fender (12) and side panel loops (11). Repeat for opposite side.

14-21. HOOD AND RADIATOR COVER REPLACEMENT (Contd)

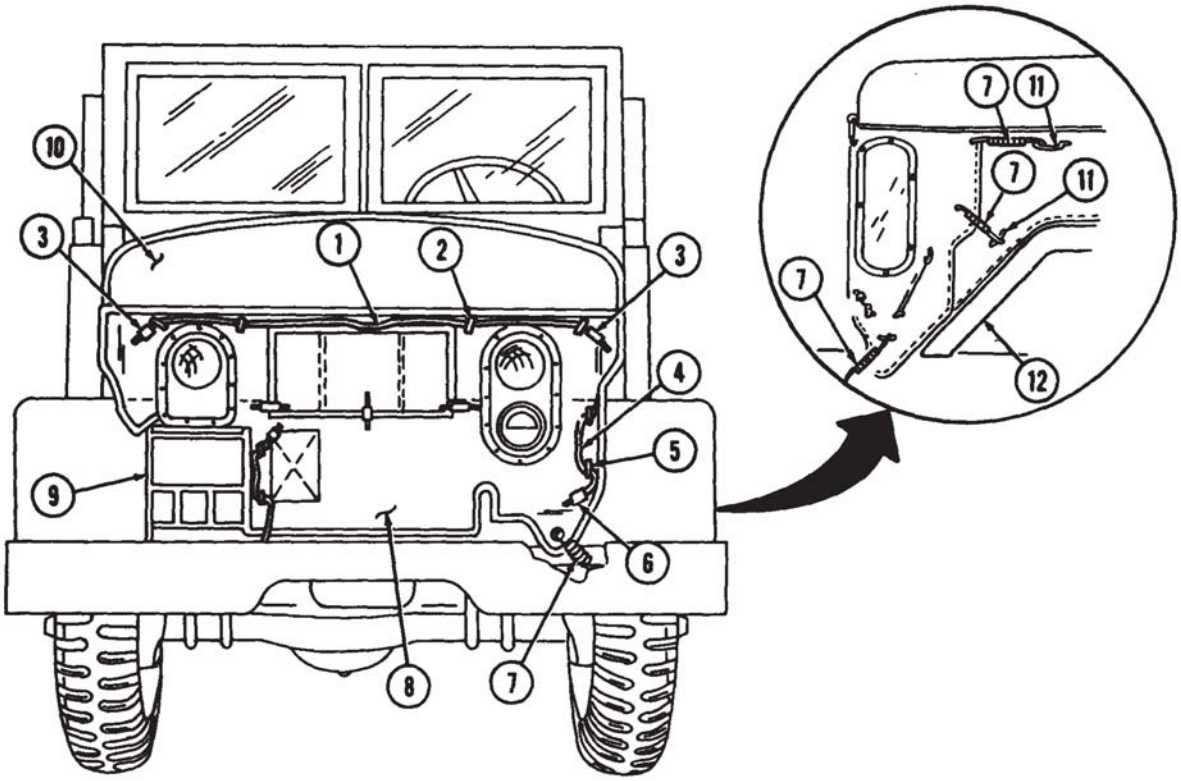

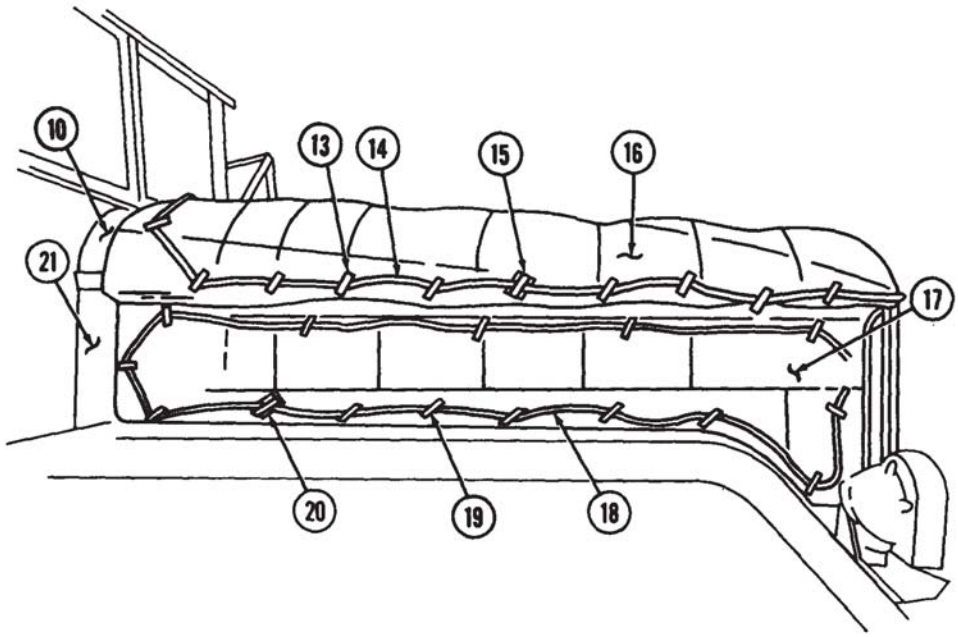

FOLLOW-ON TASK: Install air cleaner (para. 3-15).

14-22. HARDTOP KIT MAINTENANCE

THIS TASK COVERS:

a. Removal
b. Disassembly
c. Assembly
d. Installation

INITIAL SETUP

APPLICABLE MODELS
All

MATERIALS/PARTS
Thirty locknuts
Twenty-four lockwashers
Two seals

REFERENCES (TM)
TM 9-2320-260-10
TM 9-2320-260-20P

EQUIPMENT CONDITION
Parking brake set (TM 9-2320-260-10).

a. Removal

1. Remove screw (12) and lockwasher (11) from each side of roof (1) and windshield frame (10). Discard lockwashers (11).
2. Remove locknut (2), screw (8), and washer (9) from each side of roof (1) and windshield frame (10). Discard locknuts (2).

NOTE

Assistant will help with step 3.

3. Remove fourteen locknuts (3), screws (7), twenty-eight washers (4), roof (1), and seal (5) from windshield frame (10) and back panel (6). Discard locknuts (3) and seal (5).
4. Remove fourteen locknuts (18), screws (13), washers (19), and back panel (6) from cab (17). Discard locknuts (18).
5. Remove two screws (16), retainers (15), and seal (14) from back panel (6). Discard seal (14).

b. Disassembly

1. Remove eight nuts (20), lockwashers (21), screws (24), and frame cap (23) from back panel (6) and rear window (22). Discard lockwashers (21).
2. Remove fourteen nuts (27), lockwashers (26), screws (25), and rear window (22) from back panel (6). Discard lockwashers (26).

c. Assembly

1. Install rear window (22) on back panel (6) with fourteen screws (25), new lockwashers (26), and nuts (27).
2. Install frame cap (23) on rear window (22) and back panel (6) with eight screws (24), new lockwashers (21), and nuts (20).

14-22. HARDTOP KIT MAINTENANCE (Contd)

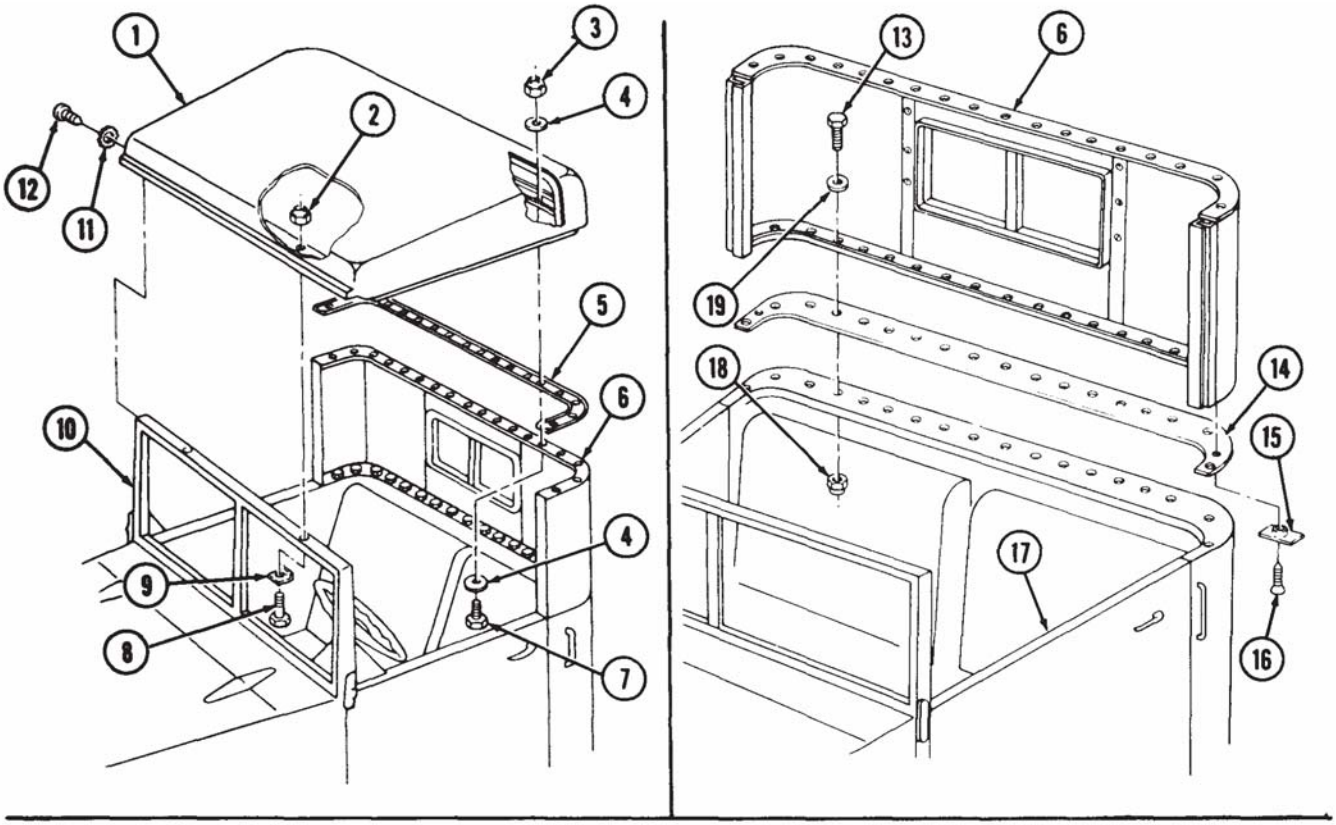

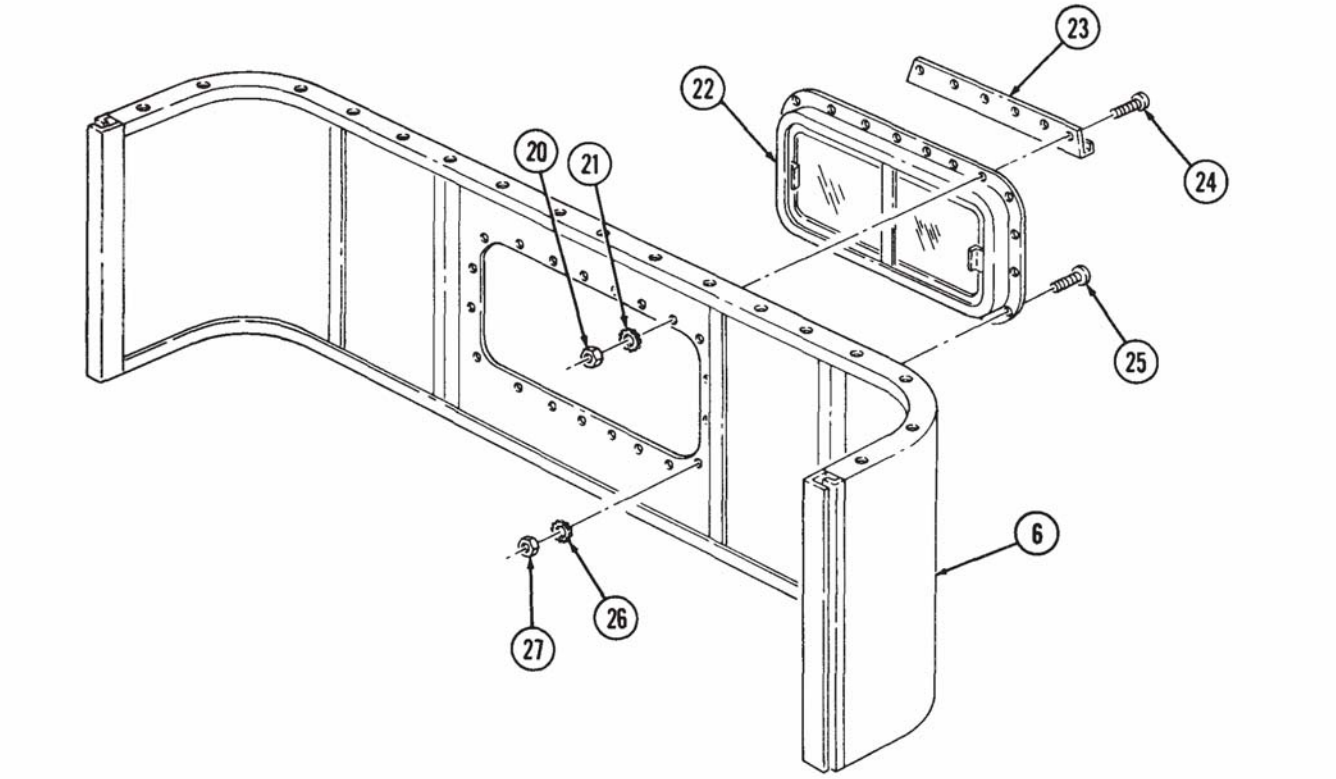

14-22. HARDTOP KIT MAINTENANCE (Contd)

d. Installation

NOTE

Do not tighten screws or nuts until kit is fully installed.

1. Position new seal (3), two retainers (4), and back panel (2) on cab (6), aline holes, and install with two retainers (4), screws (5), fourteen screws (1), washers (8), and new locknuts (7).

NOTE

Assistant will help with step 2.

2. Position new seal (15) and roof (11) on back panel (2), aline holes, and install with twenty-eight washers (14), fourteen screws (16), and new locknuts (13).
3. Install two washers (18), screw (17), and new locknuts (12) on roof (11) and windshield frame (19).
4. Close cab doors and inspect all panels for proper alinement and seating. Adjust as required.
5. Tighten all screws and nuts.
6. Install two new lockwashers (10) and screw (9) on roof (11) and windshield frame (19).

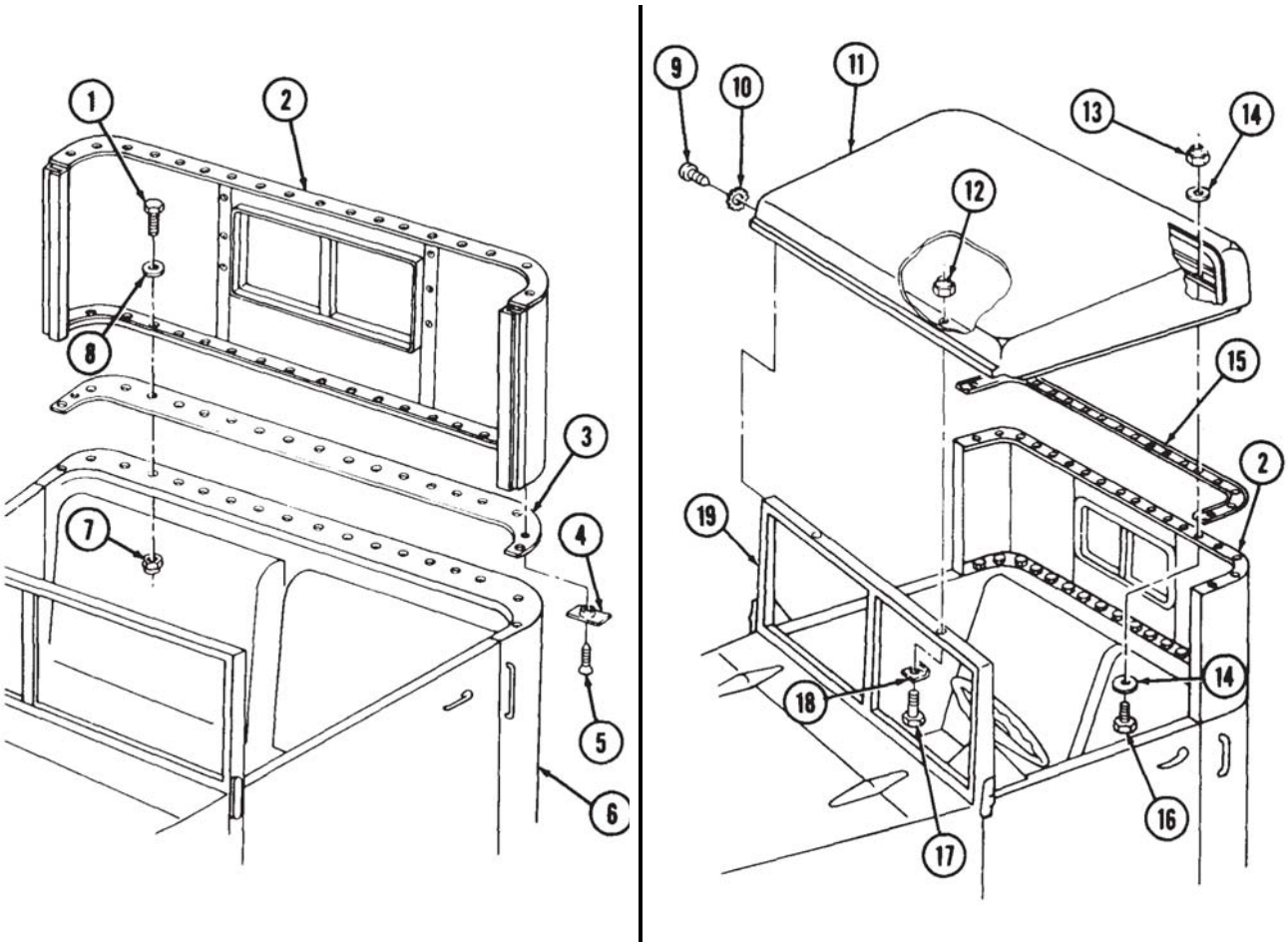

14-23. TRANSMISSION GEARSHIFT LEVER, TRANSFER SHIFT LEVER, AND FRONT WINCH LEVER COVER REPLACEMENT

THIS TASK COVERS:

a. Removal **b. Installation**

INITIAL SETUP

APPLICABLE MODELS
All

REFERENCES (TM)
TM 9-2320-260-10
TM 9-2320-260-20P

EQUIPMENT CONDITION
Parking brake set (TM 9-2320-260-10).

NOTE

Transmission gearshift lever, transfer shift lever, and front winch lever covers are replaced basically the same. This procedure covers the transmission gearshift lever cover.

a. Removal

1. Remove gearshift knob (1) from gearshift lever (5).
2. Remove four screws (2) and gearshift cover (3) from intermediate tunnel (4). Slide gearshift cover (3) from gearshift lever (5).

b. Installation

1. Place gearshift cover (3) over gearshift lever (5) and install on intermediate tunnel (4) with four screws (2).
2. Install gearshift knob (1) on gearshift lever (5).

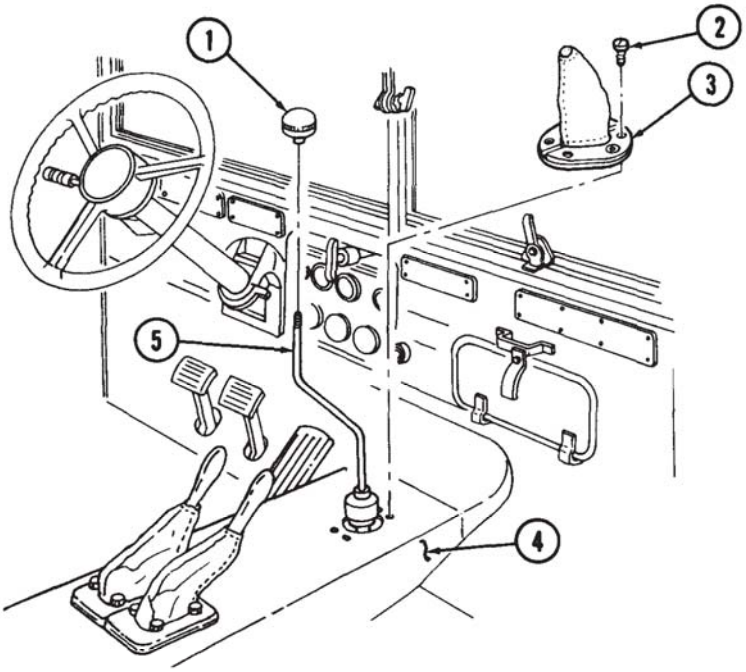

14-24. ALCOHOL EVAPORATOR REPLACEMENT

THIS TASK COVERS:

a. Removal **b. Installation**

INITIAL SETUP

APPLICABLE MODELS
All

MATERIALS/PARTS
Three locknuts
Lockwasher
O-ring
Antiseize tape (Appendix C, Item 30)

REFERENCES (TM)
TM 9-2320-260-10
TM 9-2320-260-20P

EQUIPMENT CONDITION
- Parking brake set (TM 9-2320-260-10).
- Hood raised and secured (TM 9-2320-260-10).
- Radiator removed (para. 3-50).

GENERAL SAFETY INSTRUCTIONS
Keep fire extinguisher nearby when working with open fuel lines.

WARNING

Alcohol used in alcohol evaporator is flammable, poisonous, and explosive. Do not smoke when adding fluid and do not drink fluid. Failure to observe warning will result in injury or death.

a. Removal

1. Remove jar (8) and O-ring (6) from evaporator body (5). Discard O-ring (6).
2. Disconnect tube (15) from elbows (1) and (3).
3. Remove three locknuts (7), screws (4), and evaporator body (5) from bracket (13). Discard locknuts (7).
4. Remove elbows (3) and (1) from evaporator body (5) and air compressor (2).
5. Remove nut (10), lockwasher (11), screw (14), bracket (13), and headlight bracket support (12) from left fender (9). Discard lockwasher (11).

b. Installation

1. Apply antiseize tape to male threads of elbows (1) and (3) and jar (8).
2. Install headlight bracket support (12) and bracket (13) on left fender (9) with screw (14), new lockwasher (11), and nut (10).
3. Install elbows (3) and (1) on evaporator body (5) and air compressor (2).
4. Install evaporator body (5) on bracket (13) with three screws (4) and new locknuts (7).
5. Connect tube (15) to elbows (1) and (3).
6. Install new O-ring (6) and jar (8) on evaporator body (5).

14-24. ALCOHOL EVAPORATOR REPLACEMENT (Contd)

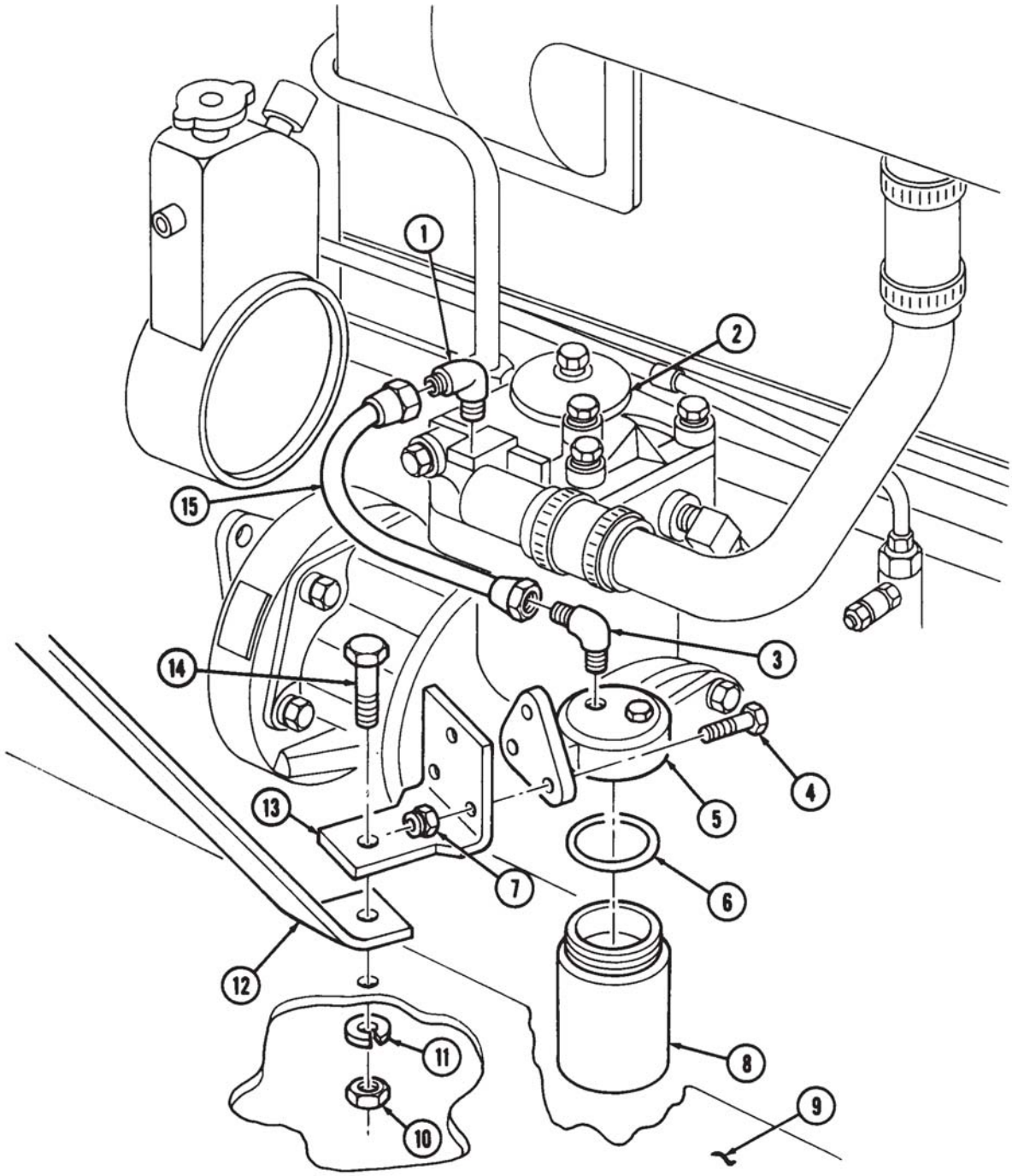

FOLLOW-ON TASKS: • Fill alcohol evaporator jar to proper level (TM 9-2320-260-10).
• Install radiator (para. 3-50).

14-25. SLAVE RECEPTACLE KIT REPLACEMENT

THIS TASK COVERS:

a. Removal **b. Installation**

INITIAL SETUP

APPLICABLE MODELS
All

MATERIALS/PARTS
Six lockwashers

REFERENCES (TM)
TM 9-2320-260-10
TM 9-2320-260-20P

EQUIPMENT CONDITION
- Parking brake set (TM 9-2320-260-10).
- Battery ground cable disconnected (para. 4-48).

GENERAL SAFETY INSTRUCTIONS
Battery ground cables must be disconnected before removing slave receptacle.

WARNING

Do not remove slave receptacle before disconnecting battery ground cables. If energized battery cables contact cab, a direct short will result and may cause injury to personnel.

NOTE

The slave receptacle is replaced basically the same way in vehicles with or without an engine coolant heater installed. This procedure covers a slave receptacle in a vehicle with an engine coolant heater.

a. Removal

1. Remove nut (10), screw (18), ground cables (6), (11), and (19), and two lockwashers (9) from the right hand frame rail (12). Discard lockwashers (9).
2. Remove nut (17), screw (13), and positive cables (14) and (16) from positive battery terminal (15).
3. Remove four nuts (20), lockwashers (21), and screws (22) from slave receptacle (1) and cab (2). Discard lockwashers (21).
4. Remove two screws (5), clamps (4), ground cable (6), and positive cable (16) from cab back panel support (3).
5. Remove two grommets (8) from cab floor (7) and pull slave receptacle (1) and cables (6) and (16) from cab (2).

b. Installation

1. Position slave receptacle (1) on cab (2).
2. Install two grommets (8) on ground cable (6) and positive cable (16) and install grommets (8) on cab floor (7).
3. Install slave receptacle (1) on cab (2) with four screws (22), new lockwashers (21), and nuts (20).
4. Install positive cables (14) and (16) on positive battery terminal (15) with screw (13) and nut (17).
5. Install ground cables (6), (11), and (19) on right hand frame rail (12) with screw (18), two new lockwashers (9), and nut (10).
6. Install ground cable (6) and positive cable (16) on cab back panel support (3) with two clamps (4) and screws (5).

14-25. SLAVE RECEPTACLE KIT REPLACEMENT (Contd)

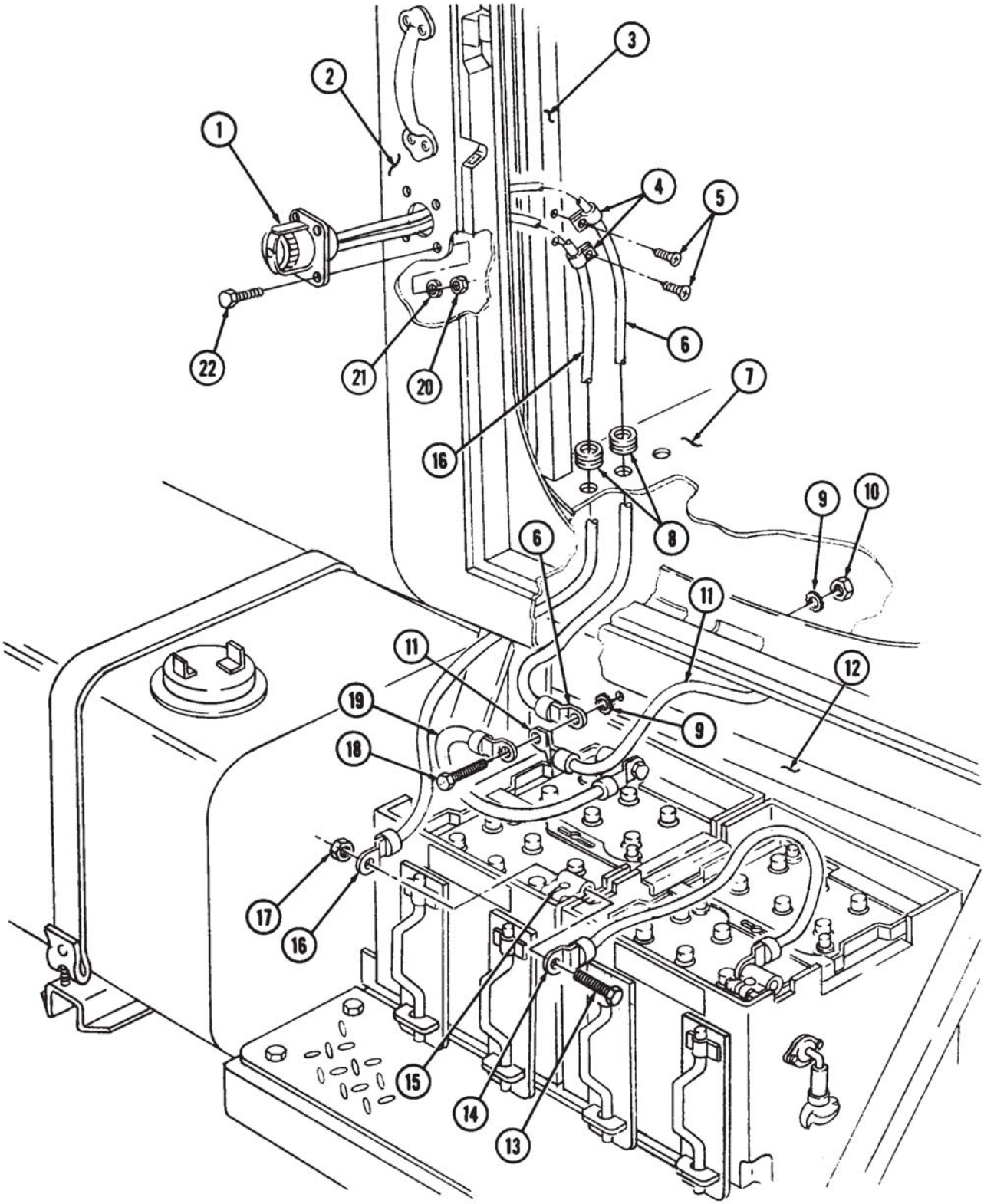

FOLLOW-ON TASK: Connect battery ground cable (para. 4-48).

Section II. DEEPWATER FORDING KIT MAINTENANCE

14-26. DEEPWATER FORDING KIT MAINTENANCE INDEX

PARA. NO.	TITLE	PAGE NO.
14-27.	Deepwater Fording Hand Control and Cable Replacement	14-52
14-28.	Deepwater Fording Pressurization Valve Replacement	14-54
14-29.	Deepwater Fording Pressure Relief Valve Replacement	14-56
14-30.	Deepwater Fording Snorkel Replacement	14-57

14-27. DEEPWATER FORDING HAND CONTROL AND CABLE REPLACEMENT

THIS TASK COVERS:

a. Removal **b. Installation**

INITIAL SETUP

APPLICABLE MODELS
All

MATERIALS/PARTS
Locknut
Lockwasher

REFERENCES (TM)
TM 9-2320-260-10
TM 9-2320-260-20P

EQUIPMENT CONDITION
- Parking brake set (TM 9-2320-260-10).
- Hood raised and secured (TM 9-2320-260-10).

a. Removal

1. Loosen two screws (6) and remove control cable (7) from valve nuts (5).
2. Remove locknut (9), screw (4), clamp (3), and control cable (7) from bracket (8). Discard locknut (9).
3. Remove grommet (2) from hole in firewall (1).
4. Remove nut (11) and pull hand control (13) and control cable (7) from nut (11), lockwasher (12), and instrument panel (10). Discard lockwasher (12).

b. Installation

1. Insert control cable (7) through hole in instrument panel (10), new lockwasher (12), and nut (11).
2. Install hand control (13) on instrument panel (10) with new lockwasher (12) and nut (11).
3. Insert control cable (7) through hole in firewall (1).
4. Place grommet (2) over control cable (7) and install on firewall (1).
5. Insert control cable (7) through two valve nuts (5) and tighten screws (6).
6. Install control cable (7) on bracket (8) with clamp (3), screw (4), and new locknut (9).

14-27. DEEPWATER FORDING HAND CONTROL AND CABLE REPLACEMENT (Contd)

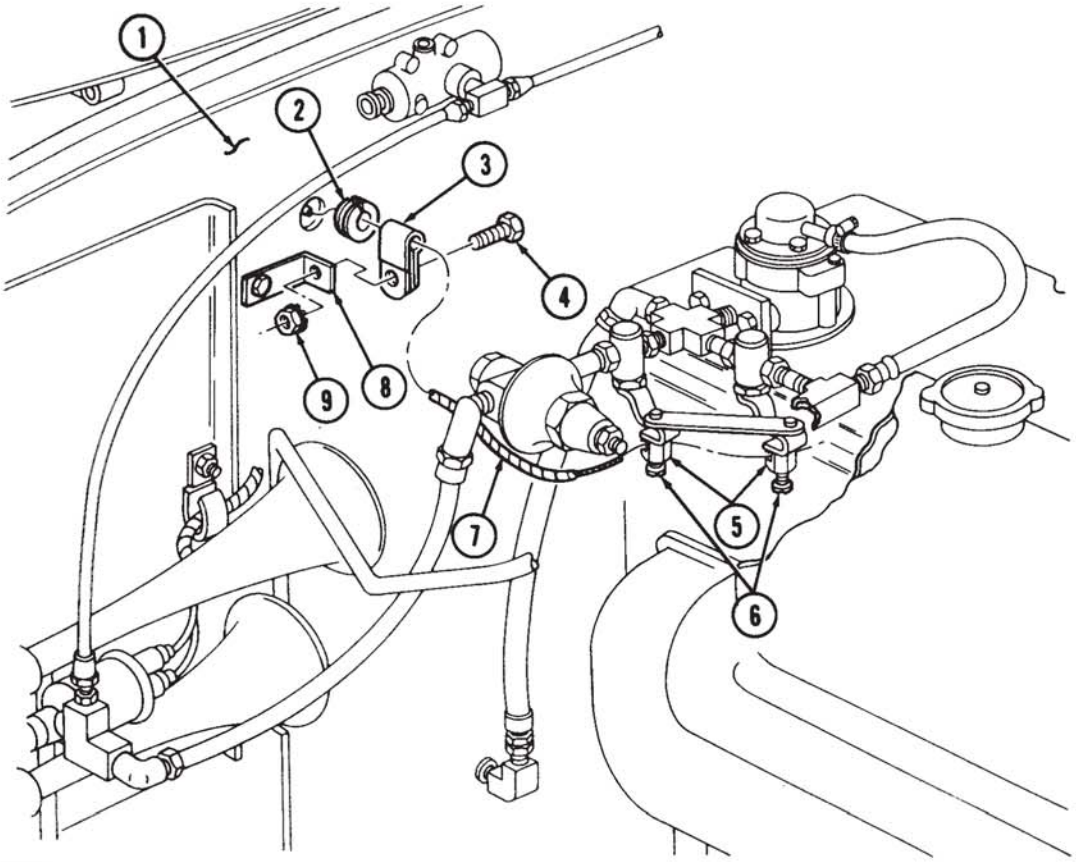

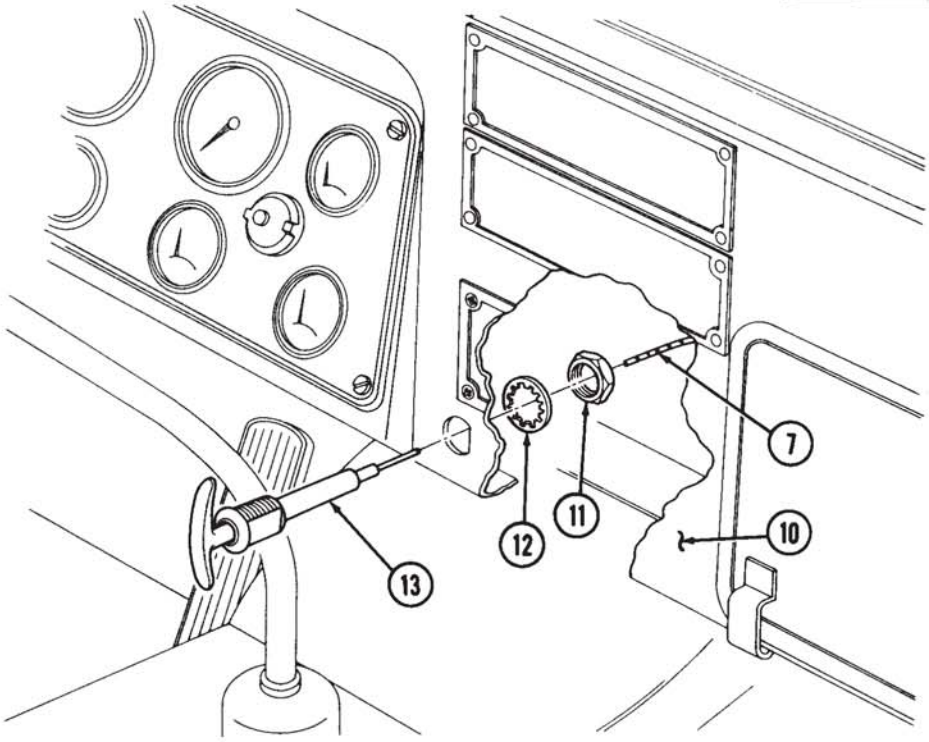

14-28. DEEPWATER FORDING PRESSURIZATION VALVE REPLACEMENT

THIS TASK COVERS:

a. Removal **b. Installation**

INITIAL SETUP

APPLICABLE MODELS

All

MATERIALS/PARTS

Two lockwashers
Gasket
Antiseize tape (Appendix C, Item 30)

REFERENCES (TM)

TM 9-2320-260-10
TM 9-2320-260-20P

EQUIPMENT CONDITION

. Parking brake set (TM 9-2320-260-10).
• Hood raised and secured (TM 9-2320-260-10).
. Air reservoirs drained (TM 9-2320-260-10).

GENERAL SAFETY INSTRUCTIONS

Do not disconnect air lines before draining air reservoirs.

a. Removal

WARNING

Do not disconnect air lines before draining air reservoirs. Small parts under pressure may shoot out with high velocity, causing injury to personnel.

1. Loosen screw (20) and remove control cable (3) from pressurization valve (10).
2. Disconnect hose (22) and elbow (23) from tee (24).
3. Disconnect hose (5) from elbow (6).
4. Loosen clamp (13) and remove hose (14) from pressure relief valve (12) and tee (15).
5. Loosen two clamps (18) and remove hose (19) horn adapter (17) and draft tube (21).
6. Remove two screws (8), lockwashers (9), pressurization valve (10), and gasket (11) from pressure relief valves (12). Discard lockwashers (9) and gasket (11).
7. Remove hose (l), elbow (2), regulator. valve (4), and nipple (7) from pressurization valve (10).
8. Remove adapter (17), tee (15), and nipple (16) from pressurization valve (10).
9. Remove elbow (6) from pressurization valve (10).

b. Installation

1. Apply antiseize tape to male threads on nipples (7) and (16), adapter (17), elbows (2), (6), and (23), and hoses (5) and (14).
2. Install elbow (6) on pressurization valve (10).
3. Install nipple (16), tee (15), adapter (17), and hose (14) on pressurization valve (10).
4. Install nipple (7), regulator valve (4), elbow (2), and hose (1) on pressurization valve (10).
5. Install new gasket (11) and pressurization valve (10) on pressure relief valve (12) with two new lockwashers (9) and screws (8).
6. Install hose (19) on draft tube (21) and adapter (17) with two clamps (18).
7. Install hose (14) on pressure relief valve (12) with clamp (13).
8. Connect hose (5) on elbow (6).
9. Connect elbow (23) and hose (22) on tee (24).
10. Install control cable (3) through nut on pressurization valve (10) and tighten screw (20).

14-28. DEEPWATER FORDING PRESSURIZATION VALVE REPLACEMENT (Contd)

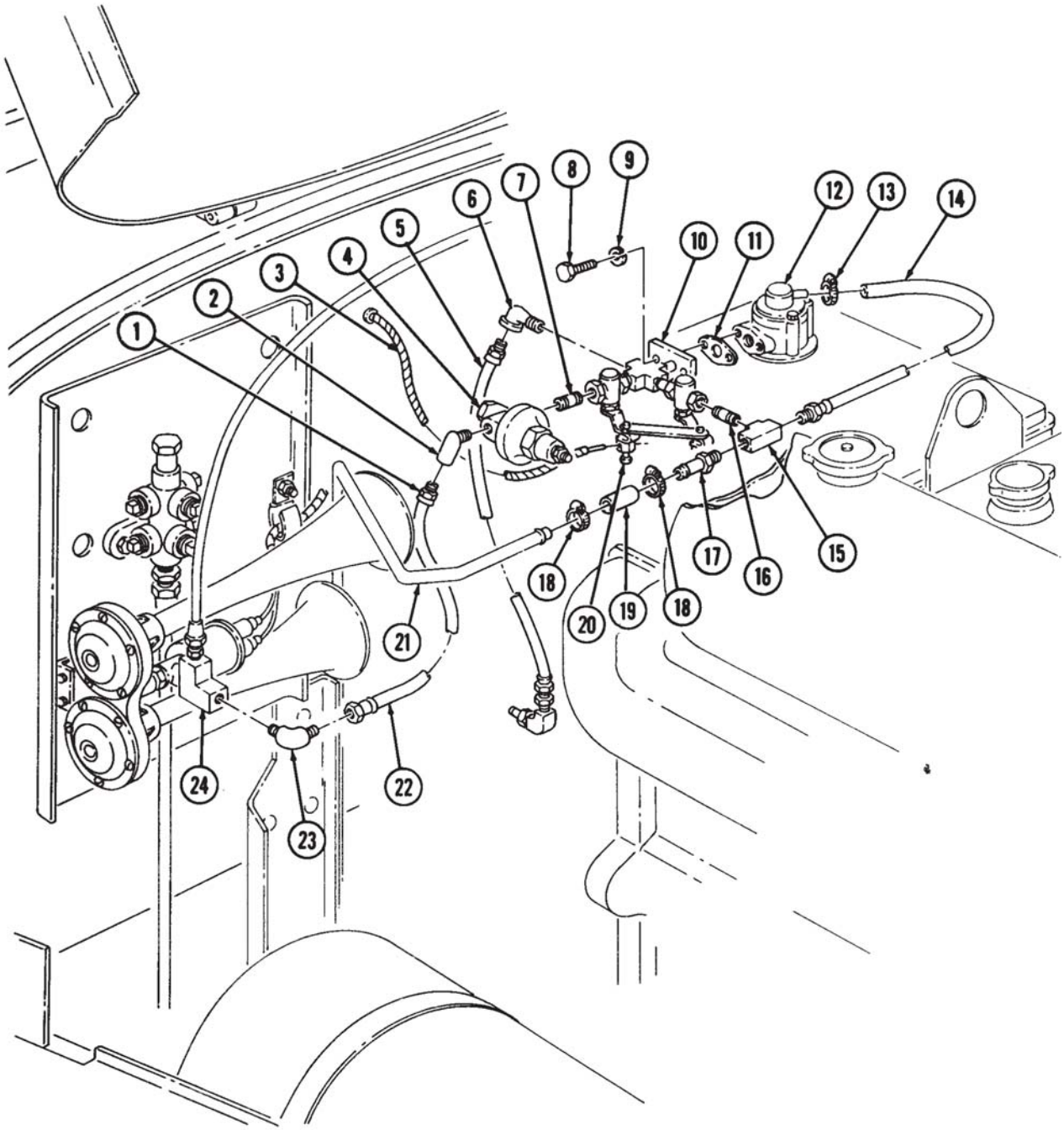

FOLLOW-ON TASK: Start engine (TM 9-2320-26-10) and check pressurization valve for proper operation and leaks.

14-29. DEEPWATER FORDING PRESSURE RELIEF VALVE REPLACEMENT

THIS TASK COVERS:

a. Removal **b. Installation**

INITIAL SETUP

APPLICABLE MODELS
All

MATERIALS/PARTS
Four lockwashers
Two gaskets

REFERENCES (TM)
TM 9-2320-260-10
TM 9-2320-260-20P

EQUIPMENT CONDITION
- Parking brake set (TM 9-2320-260-10).
- Hood raised and secured (TM 9-2320-260-10).
- Air reservoirs drained (TM 9-2320-260-10).

GENERAL SAFETY INSTRUCTIONS
Do not disconnect air lines before draining air reservoirs.

WARNING

Do not disconnect air lines before draining air reservoirs. Small parts under pressure may shoot out with high, velocity, causing injury to personnel.

1. Loosen clamp (3) and remove hose (4) from pressure relief valve (2).
2. Remove four screws (1), lockwashers (10), pressure relief valve (2), and gasket (5) from adapter (7). Discard lockwashers (10) and gasket (5).
3. Remove three screws (6), adapter (7), and gasket (9) from breather housing (8). Discard gasket (9).

b. Installation

1. Install new gasket (9) and adapter (7) on breather housing (8) with three screws (6).
2. Install new gasket (5) and pressure relief valve (2) on adapter (7) with four new lockwashers (10) and screws (1).
3. Install hose (4) on pressure relief valve (2) and tighten clamp (3).

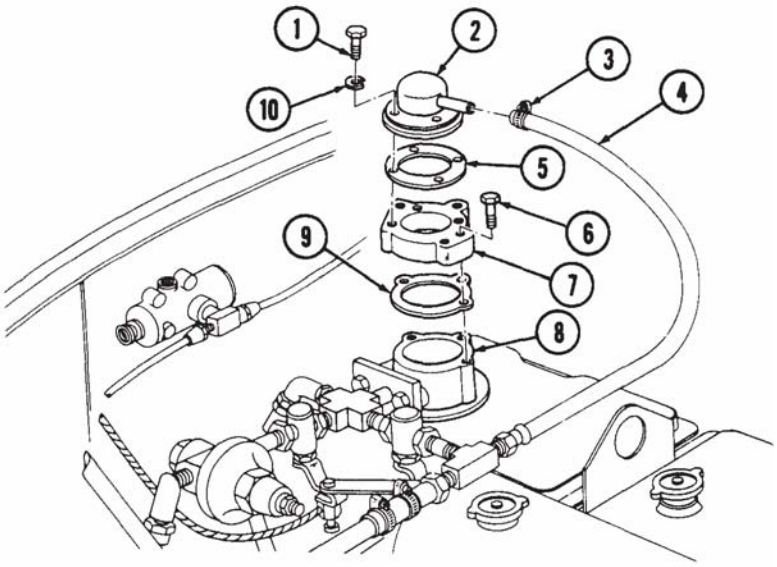

FOLLOW-ON TASK: Start engine (TM 9-2320-260-10) and check for leaks.

14-30. DEEPWATER FORDING SNORKEL REPLACEMENT

THIS TASK COVERS:

a. Removal **b. Installation**

INITIAL SETUP

APPLICABLE MODELS
All

EQUIPMENT CONDITION
Parking brake set (TM 9-2320-260-10).

REFERENCES (TM)
TM 9-2320-260-10
TM 9-2320-260-20P

a. Removal

1. Loosen clamp (2) and remove cap (1) from snorkel (3).
2. Loosen two clamps (6) and remove snorkel (3) and hose (4) from air cleaner housing (5).

b. Installation

1. Install hose (4) and snorkel (3) on air cleaner (5). Tighten two clamps (6).
2. Install cap (1) on snorkel (3). Tighten clamp (2).

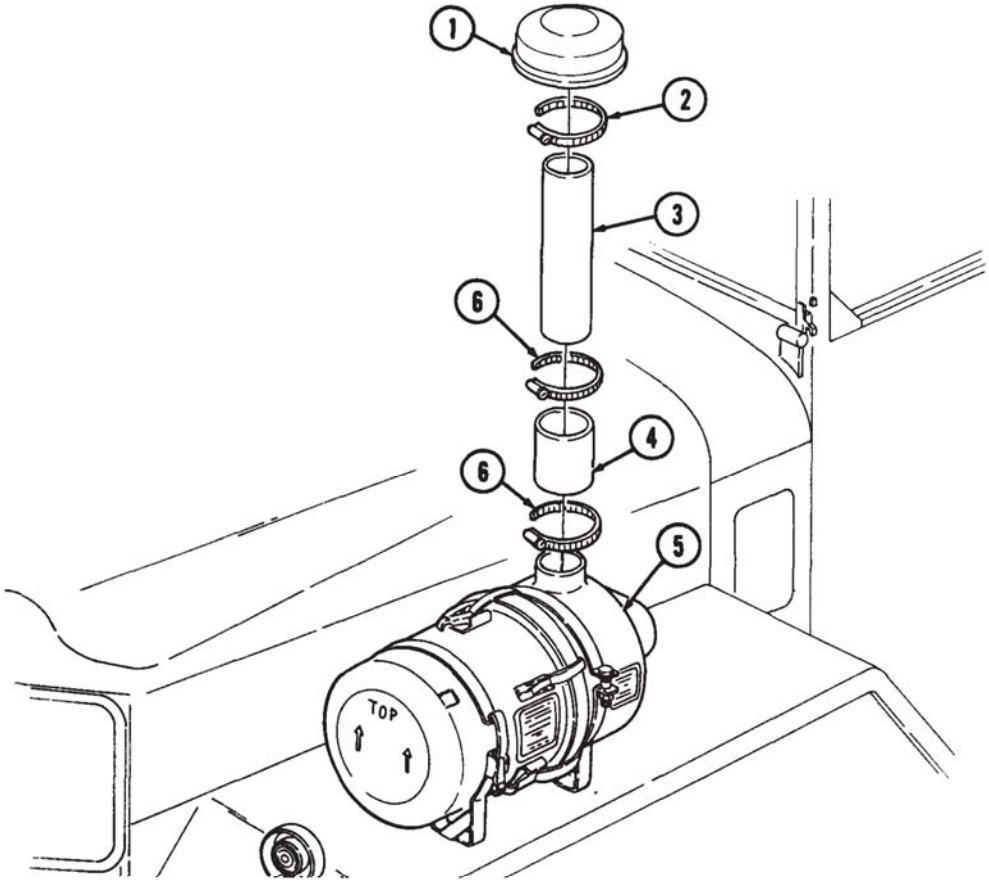

Section III. A-FRAME KIT MAINTENANCE

14-31. A-FRAME KIT MAINTENANCE

THIS TASK COVERS:

a. Removal
b. Inspection
c. Installation

INITIAL SETUP

APPLICABLE MODELS
M813, M813A1, M814, M815, M818 W/W

MATERIALS/PARTS
Lockwasher
Three locknuts

REFERENCES (TM)
TM 9-2320-260-10
TM 9-2320-260-20P

EQUIPMENT CONDITION
- Parking brake set (TM 9-2320-260-10).
- Front lifting shackles removed (vehicles w/winch only) (task c only) (para. 10-4).
- Tailgate removed (task c only); M813, M814 (para. 12-6), M813A1 (para. 12-7).

GENERAL SAFETY INSTRUCTIONS
Do not perform this procedure near high voltage wires.

WARNING

Vehicle will become charged with electricity if A-frame contacts or breaks high voltage line. Do not attempt to leave vehicle while high voltage line is in contact with A-frame or vehicle. Failure to comply will result in injury to personnel.

a. Removal

1. Remove adjusting screw (12) from bottom of each A-frame leg (11) and shackle bracket (13).

NOTE

Assistant will help with steps 2 through 4.

2. Push A-frame (1) toward cab (2).
3. Disconnect cable (9) from pintle hook (10) and lower A-frame (1) to ground.
4. Open snatch block (4) and remove winch cable (5).
5. Remove snatch block (4) from A-frame spreader tube (3).
6. Remove shackle pin (7), cable (9), and harness (6) from shackle (8).
7. Remove locknut (18), lockwasher (17), two washers (15), eyebolt plate (16), and eyebolt (14) from rear cargo bed (19). Discard locknut (18) and lockwasher (17).
8. Remove two locknuts (20), nuts (21), washers (22), harness (6), two spacers (23), stud (24), and A-frame spreader tube (3) from leg extensions (25). Discard locknuts (20).
9. Remove two pins (26) and leg extensions (25) from A-frame legs (11).
10. Remove two pins (27) and A-frame legs (11) from shackle brackets (13).

14-31. A-FRAME KIT MAINTENANCE (Contd)

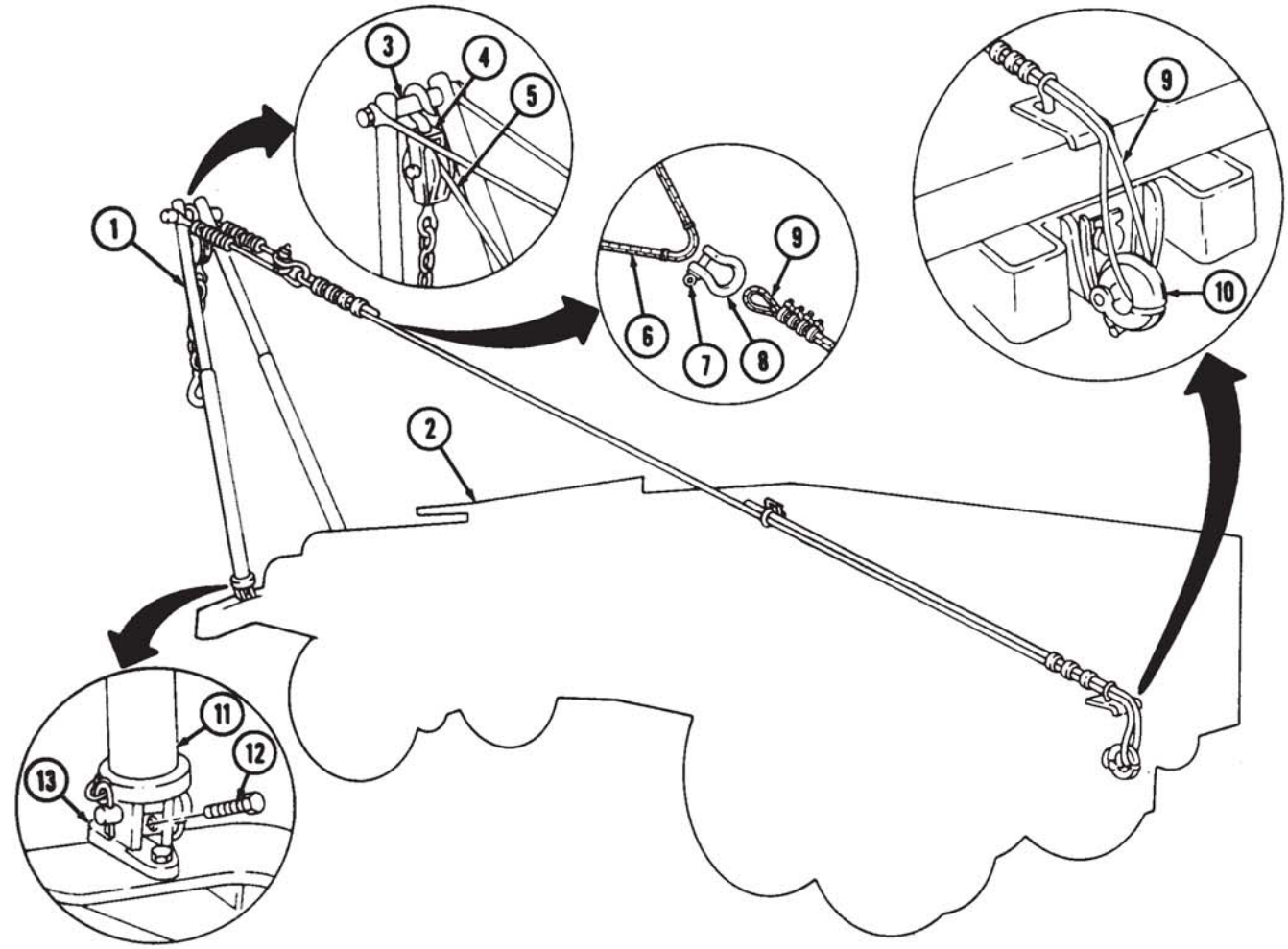

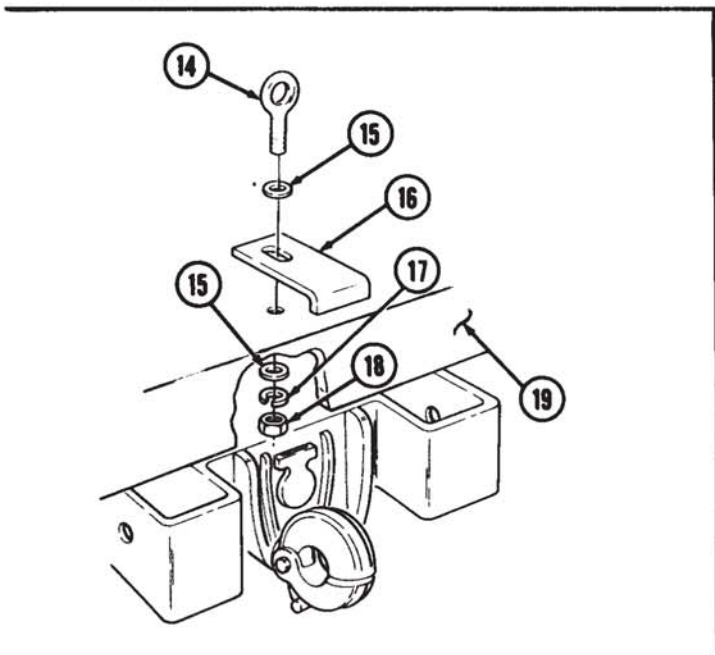

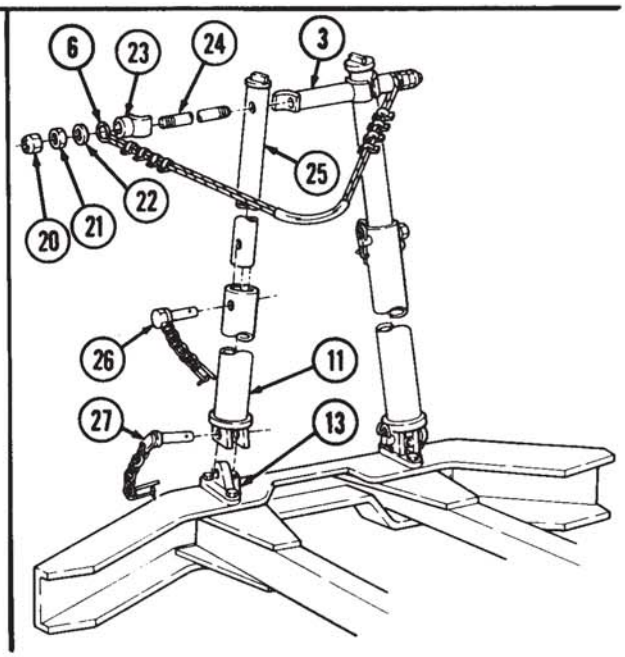

14-31. A-FRAME KIT MAINTENANCE (Contd)

b. Inspection

1. Inspect all metal components for bends, cracks, and breaks. Replace if damaged.
2. Inspect harness (10) and cable (25) for fraying, breaks, and loose or missing clamps. Repair or replace harness (10) and cable (25) if necessary.

c. Installation

1. Install eyebolt plate (3), washer (2), and eyebolt (1) on rear cargo bed (6).
2. Install washer (2), new lockwasher (4), and new locknut (5) on eyebolt (1).
3. Install A-frame legs (15) on shackle brackets (16) with two pins (17).
4. Install two leg extensions (14) into A-frame legs (15), aline holes, and install two pins (18).
5. Install A-frame spreader tube (13) and spreader tube stud (12) on leg extensions (14). Position stud (12) so ends extend equally through holes in leg extensions (14), then install leg spacer (11), harness (10), washer (9), nut (8), and new locknut (7) on each end of stud (12).
6. Install cable (25), harness (10), and shackle pin (23) on shackle (24).
7. Install snatch block (21) on spreader tube (13).
8. Open snatch block (21) and install winch cable (22) on roller, then close snatch block (21).

NOTE

Assistant will help with steps 9 and 10.

9. Raise A-frame (19) toward cab (20).
10. Thread cable (25) through eyebolt (1) and install on pintle hook (27).

NOTE

A-frame must be angled approximately 60 degrees from horizontal.
Do not insert adjusting screws until all necessary adjustments have been made.

11. Loosen clamp (26) at end of cable (25). Adjust until 60 degree angle is obtained, then tighten clamp (26).
12. Install two adjusting screws (28) on A-frame legs (15).

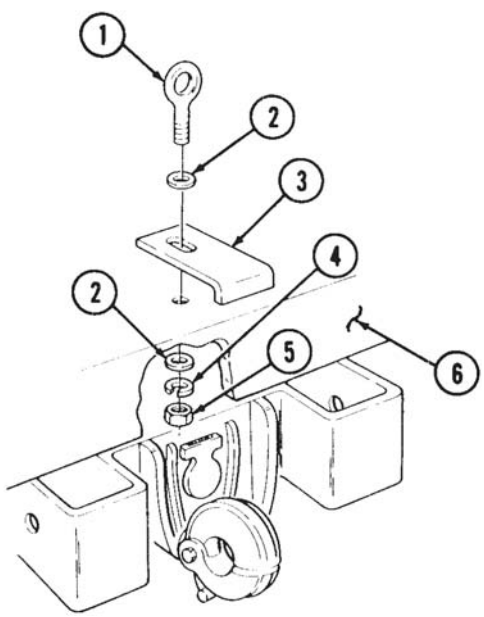

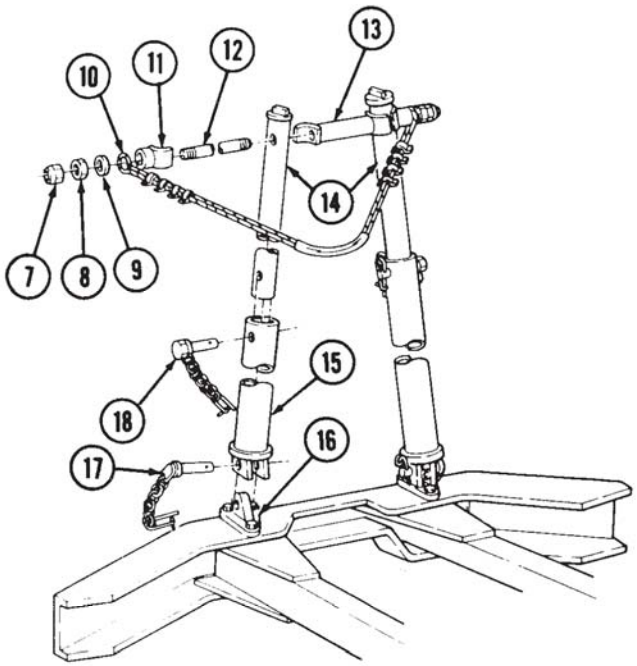

14-31. A-FRAME KIT MAINTENANCE (Contd)

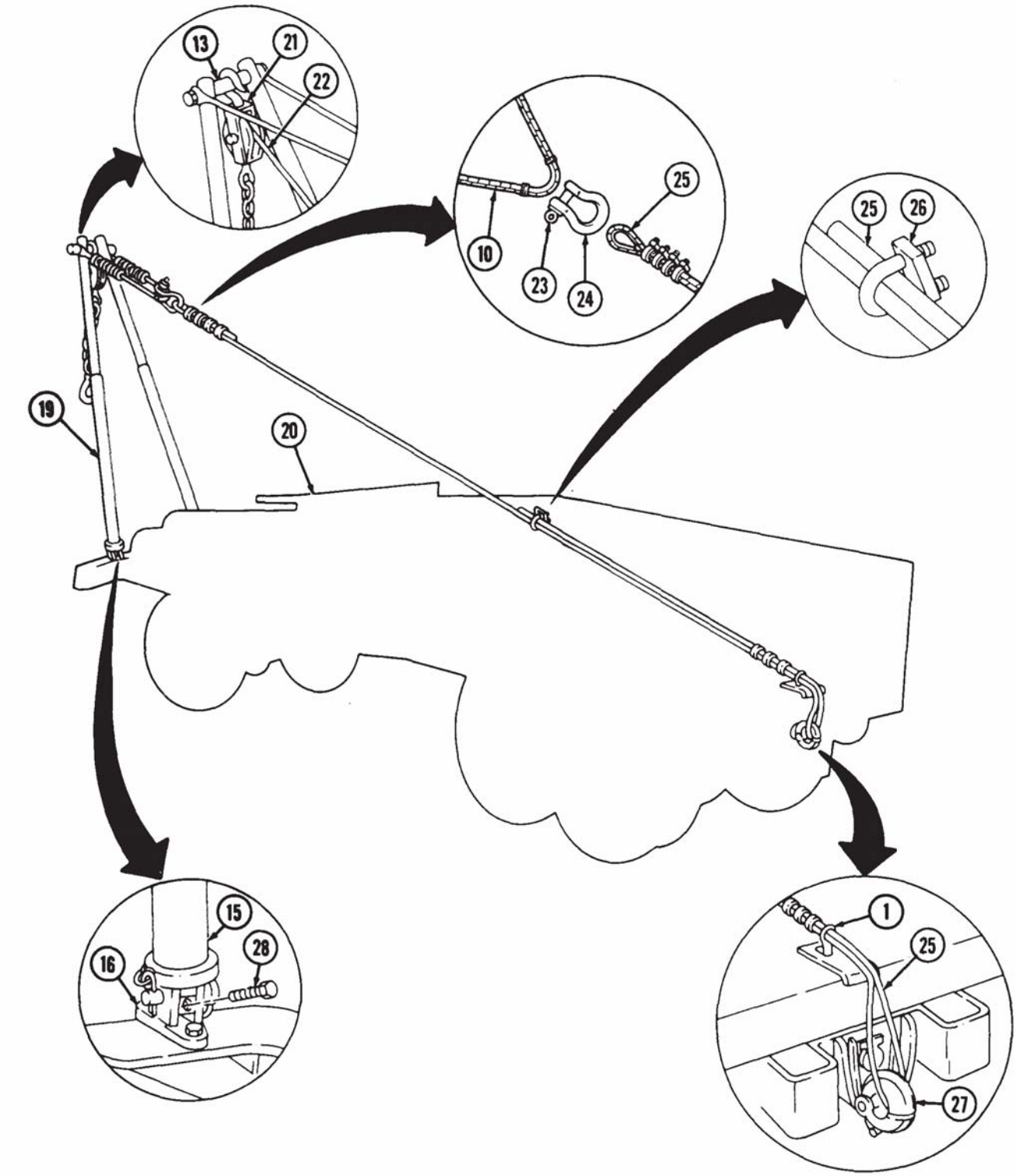

FOLLOW-ON TASKS: • Install tailgate (if removed), M813, M814 (para. 12-6); M813A1 (para. 12-7).
• Install front lifting shackles (if removed), vehicles w/winch (para. 10-4).

Section IV. MOUNTING KITS MAINTENANCE

14-32. MOUNTING KITS MAINTENANCE INDEX

PARA. NO.	TITLE	PAGE NO.
14-33.	Machine Gun Mount Kit Maintenance	14-62
14-34.	Decontamination Mounting Kit Replacement	14-68
14-35.	Rifle Mounting Kit Replacement	14-70
14-36.	Fire Extinguisher Mounting Kit Replacement	14-71

14-33. MACHINE GUN MOUNT KIT MAINTENANCE

THIS TASK COVERS:

a. Removal
b. Bracket Post Disassembly
c. Bracket Post Assembly
d. Installation

INITIAL SETUP

APPLICABLE MODELS
All (except M815, M820, M820A1, M820A2)

MATERIALS/PARTS
Thirty-two locknuts
Two cotter pins

PERSONNEL REQUIRED
Two

REFERENCES (TM)
TM 9-2320-260-10
TM 9-2320-260-20P

EQUIPMENT CONDITION
- Parking brake set (TM 9-2320-260-10).
- Cab top removed, (task d only); hardtop (para. 14-22), soft top (TM 9-2320-260-10).

GENERAL SAFETY INSTRUCTIONS
Bracket posts must be held in position before removing U-bolts.

a. Removal

1. Remove twelve locknuts (5), screws (2), and twenty-four washers (3) from ring mount (1), adapter (4), and right front and rear bracket posts (6) and (7). Discard locknuts (5).

NOTE

Assistant will help with steps 2 through 4.

2. Remove ring mount (1) from adapter (4) and right front and rear bracket posts (6) and (7).

14-33. MACHINE GUN MOUNT KIT MAINTENANCE (Contd)

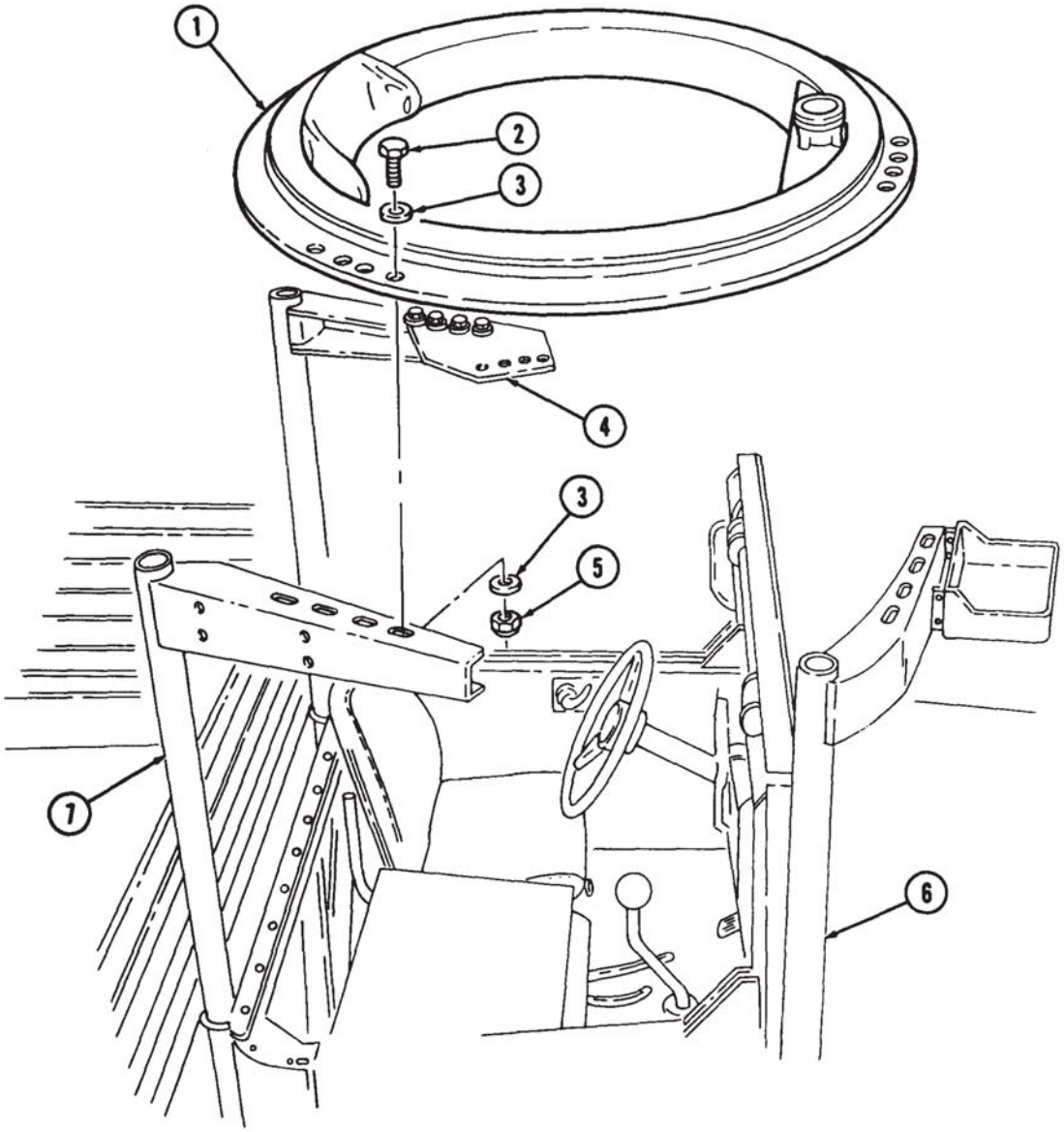

14-33. MACHINE GUN MOUNT KIT MAINTENANCE (Contd)

3. Loosen four screws (9) and remove right front bracket post (3) from front gun mount bracket (10). Tighten four screws (9).

WARNING

Bracket posts must be held in position before removing U-bolts. Failure to do so may result in injury to personnel.

4. Remove eight locknuts (6), four U-bolts (8), and left and right rear bracket posts (1) and (2) from rear gun mounts (7). Discard locknuts (6).
5. Remove two cotter pins (5) and straight pins (4) from right-rear and right-front bracket posts (2) and (3). Discard cotter pins (5).

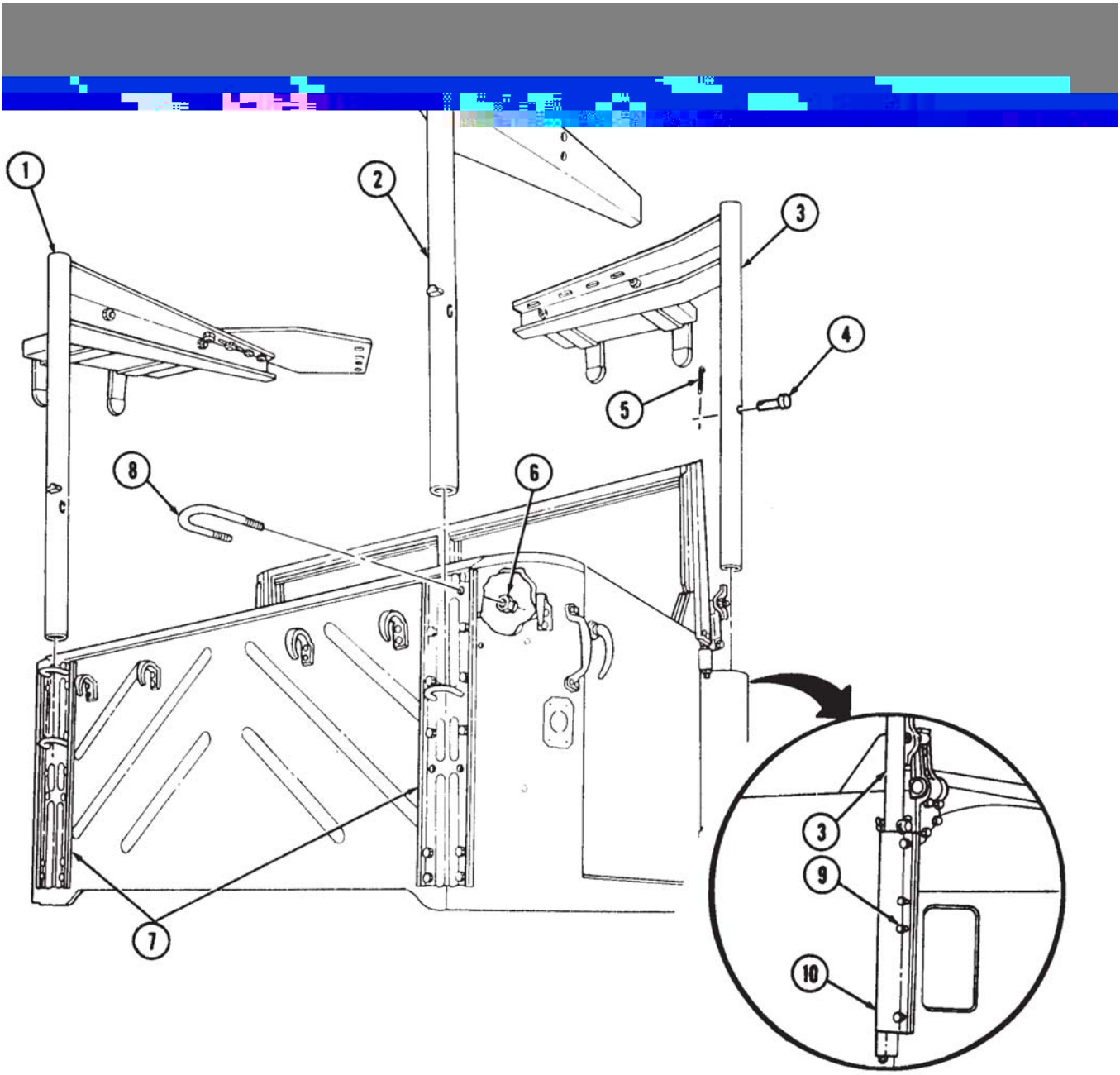

14-33. MACHINE GUN MOUNT KIT MAINTENANCE (Contd)

b. Bracket Post Disassembly

NOTE

Steps 1, 2, and 3 are identical for removing ammunition trays from both right-front bracket post and left-rear bracket post. This procedure is for disassembly of right-front bracket post.

1. Remove two straps (16) from ammunition tray (17).
2. Remove four locknuts (11), washers (12), screws (14), and ammunition tray (17) from right-front bracket post (3). Discard locknuts (11).
3. Remove four locknuts (19), washers (18), screws (20), and two tray brackets (13) from ammunition tray extensions (15). Discard locknuts (19).
4. Remove four locknuts (24), screws (21), eight washers (22), and adapter (23) from left-rear bracket post (1). Discard locknuts (24).

c. Bracket Post Assembly

NOTE

Steps 1, 2, and 3 are identical for assembling ammunition trays from both right-front bracket post and left-rear bracket post. This procedure is for disassembly of right-front bracket post.

1. Install two tray brackets (13) on ammunition tray extensions (15) with four screws (20), washers (18), and new locknuts (19).
2. Install ammunition tray (17) on right-front bracket post (3) with four screws (14), washers (12), and new locknuts (11).
3. Install two straps (16) on ammunition tray (17).
4. Aline adapter (23) with first four holes in left-rear bracket post (1) and install adapter (23) with four screws (21), eight washers (22), and four new locknuts (24). Finger tighten locknuts (24).

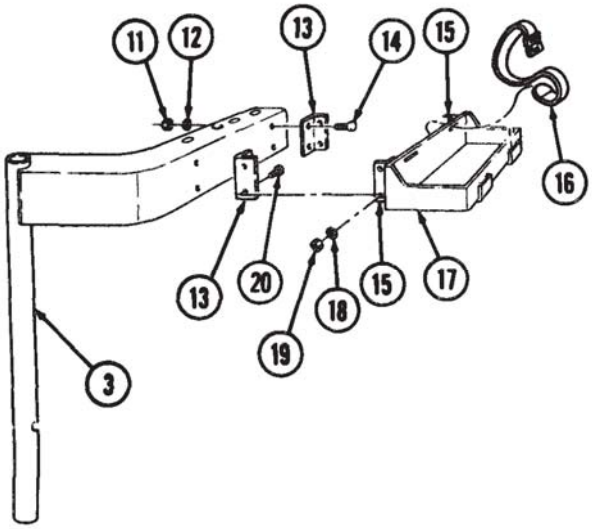

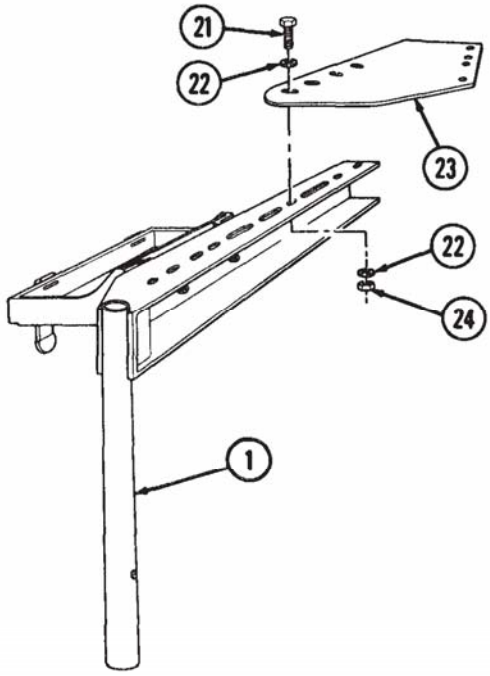

14-33. MACHINE GUN MOUNT KIT MAINTENANCE (Contd)

d. Installation

WARNING

Bracket post must be held in position when installing U-bolts.
Failure to do so may result in injury to personnel.

NOTE

Assistant will help with steps 1 through 10.

1. Insert two straight pins (3) in right-rear and front bracket posts (4) and (5) and install straight pins (3) with two new cotter pins (6).
2. Install four U-bolts (2) on rear gun mount brackets (8) and (9) with eight new locknuts (7). Finger tighten locknuts (7).
3. Install right-rear bracket post (4) through U-bolts (2) and gun mount bracket (8) ensuring straight pin (3) rests on top of U-bolt (2) and right-rear bracket post (4) turns freely.
4. Install left-rear bracket post (1) through U-bolts (2) and gun mount bracket (9) ensuring welded post pin (10) rests on top of U-bolt (2) and left-rear bracket post (1) turns freely.
5. Loosen four screws (11) on right-front gun mount bracket (12).
6. Install right-front bracket post (5) in front gun mount bracket (12) ensuring straight pin (3) rests on top of gun mount bracket (12).

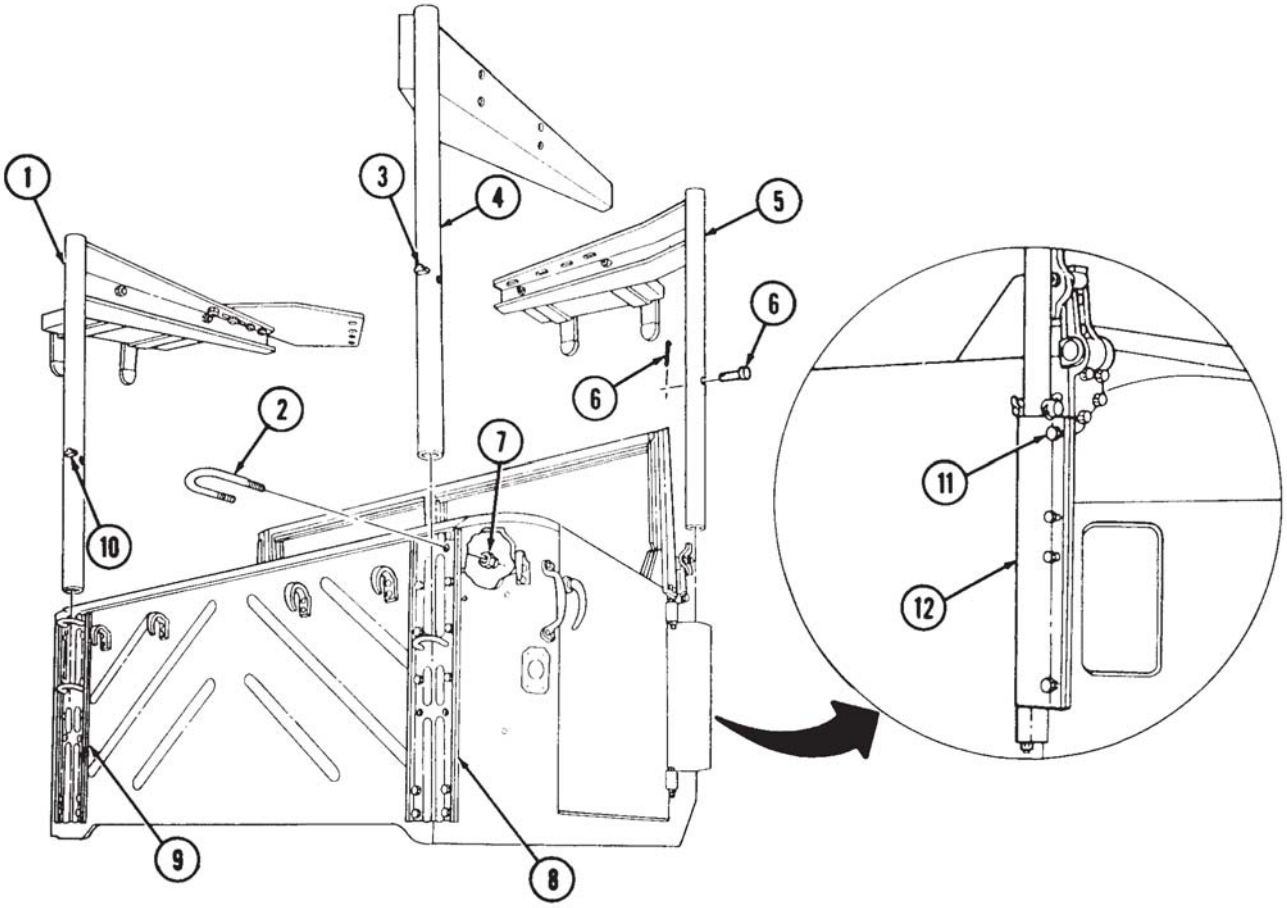

14-33. MACHINE GUN MOUNT KIT MAINTENANCE (Contd)

7. Position ring mount (13) on right-front bracket post (5), right-rear bracket post (4), and left-rear bracket post adapter (16).
8. Aline ring mount locating hole (19) with locating hole (18) in right-rear bracket post (4) and install with twelve screws (14), twenty-four washers (15), and twelve new locknuts (17).
9. Tighten four right-front gun mount screws (11).
10. Tighten remaining gun mount hardware.

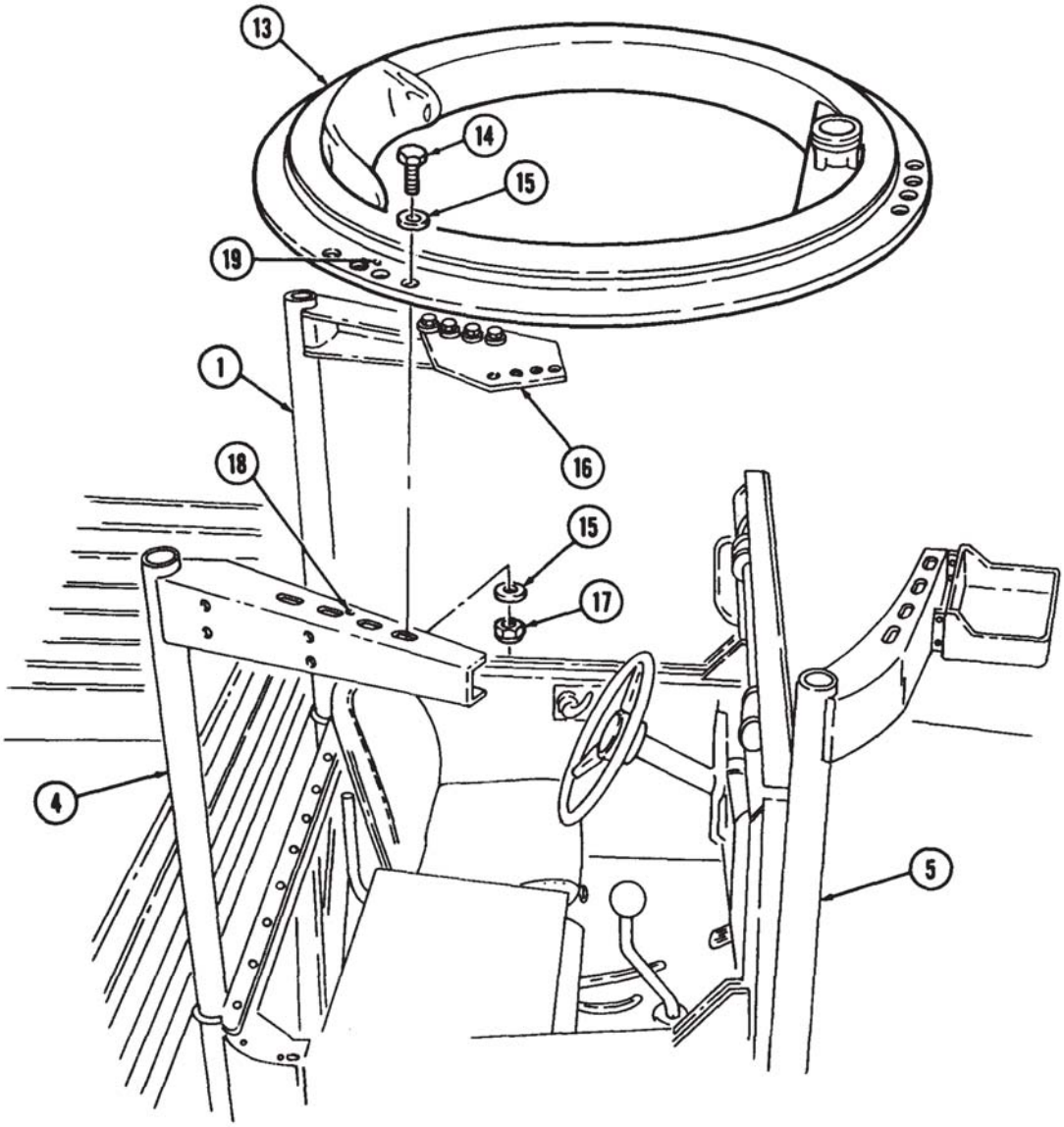

FOLLOW-ON TASK: Install cab hardtop (para. 14-22); soft top (TM 9-2320-260-10), if removed.

14-34. DECONTAMINATION MOUNTING KIT REPLACEMENT

THIS TASK COVERS:

a. Removal b. Installation

INITIAL SETUP

APPLICABLE MODELS
All

MATERIALS/PARTS
Eight locknuts

REFERENCES (TM)
TM 9-2320-260-10
TM 9-2320-260-20P
TM 3-4230-204-12&P

EQUIPMENT CONDITION
- Parking brake set (TM 9-2320-260-10).
- Decontamination apparatus removed (TM 3-4230-204-12&P).

a. Removal

1. Remove five locknuts (9), screws (6), ten washers (7), support bracket (2), and brace (5) from fender (10). Discard locknuts (9).
2. Remove locknut (4), washer (3), and brace (5) from support bracket (2) and stud (14). Discard locknut (4).
3. Remove two straps (1) from bracket (13) and support bracket (2).
4. Remove two locknuts (8), screws (11), washers (12), and bracket (13) from support bracket (2). Discard locknuts (8).

b. Installation

1. Install bracket (13) on support bracket (2) with two washers (12), screws (11), and new locknuts (8).
2. Install two straps (1) on bracket (13) and support bracket (2).
3. Install brace (5) on support bracket (2) and stud (14) with washer (3) and new locknut (4). Finger tighten locknut (4).
4. Position support bracket (2) and brace (5) on fender (10) and install with five screws (6), ten washers (7), and five new locknuts (9).
5. Tighten locknut (4).

14-34. DECONTAMINATION MOUNTING KIT REPLACEMENT (Contd)

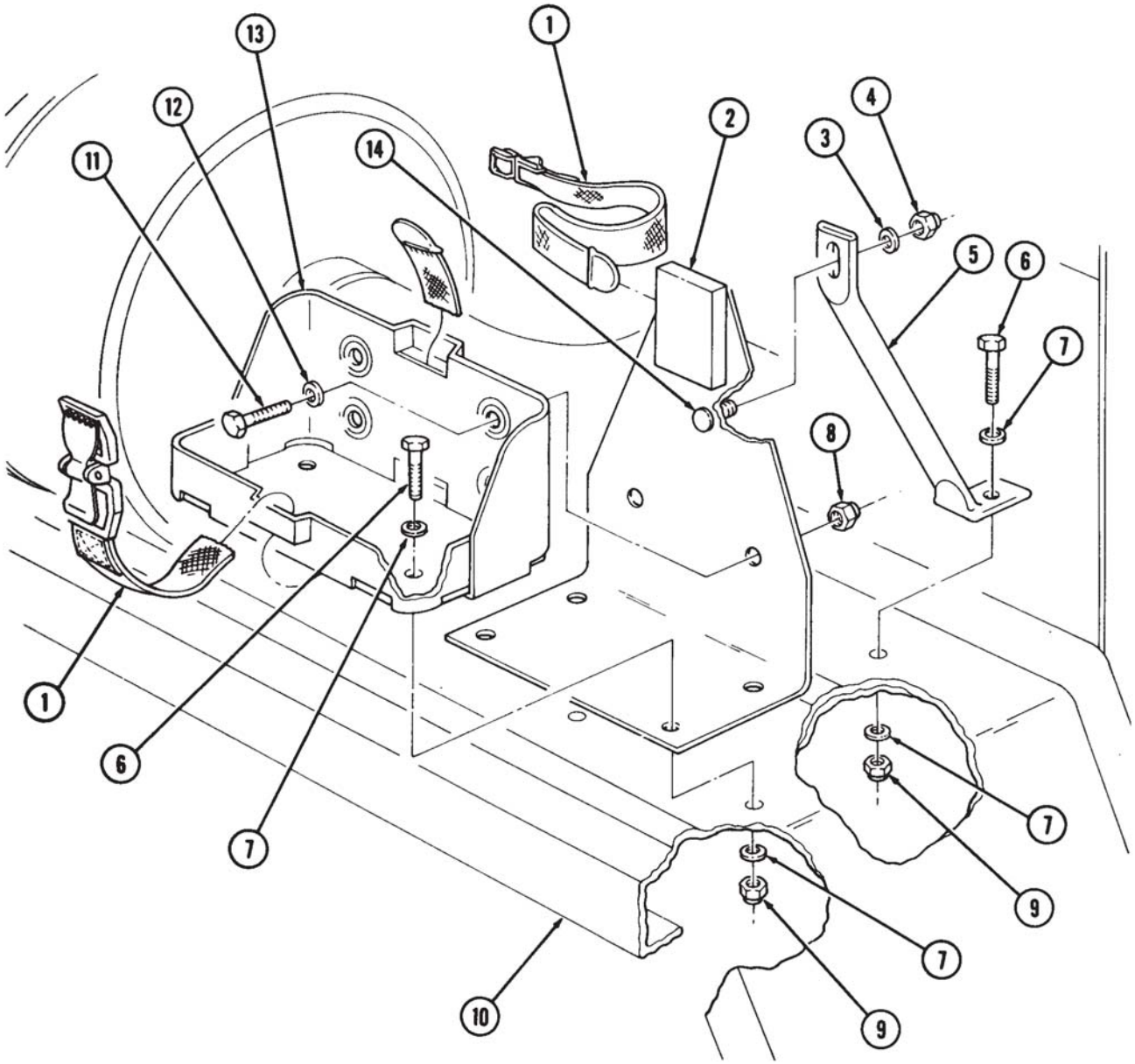

FOLLOW-ON TASK: Install decontamination apparatus (TM 3-4230-204-12&P).

14-35. RIFLE MOUNTING KIT REPLACEMENT

THIS TASK COVERS:

a. Removal **b. Installation**

INITIAL SETUP

APPLICABLE MODELS
All

MATERIALS/PARTS
Eleven locknuts

REFERENCES (TM)
TM 9-2320-260-10
TM 9-2320-260-20P

EQUIPMENT CONDITION
Parking brake set (TM 9-2320-260-10).

a. Removal

1. Remove three locknuts (3), screws (1), and mounting bracket (8) from instrument panel (4). Discard locknuts (3).
2. Remove four locknuts (2), screws (5), two catches (6), and brackets (7) from mounting bracket (8). Discard locknuts (2).

NOTE
Assistant will help with step 3.

3. Remove four locknuts (11), screws (9), and two supports (10) from cab floor (12). Discard locknuts (11).

b. Installation

NOTE
Assistant will help with step 1.

1. Install two supports (10) on cab floor (12) with four screws (9) and new locknuts (11).
2. Install two brackets (7) and catches (6) on mounting bracket (8) with four screws (5) and new locknuts (2).
3. Install mounting bracket (8) on instrument panel (4) with three screws (1) and new locknuts (3).

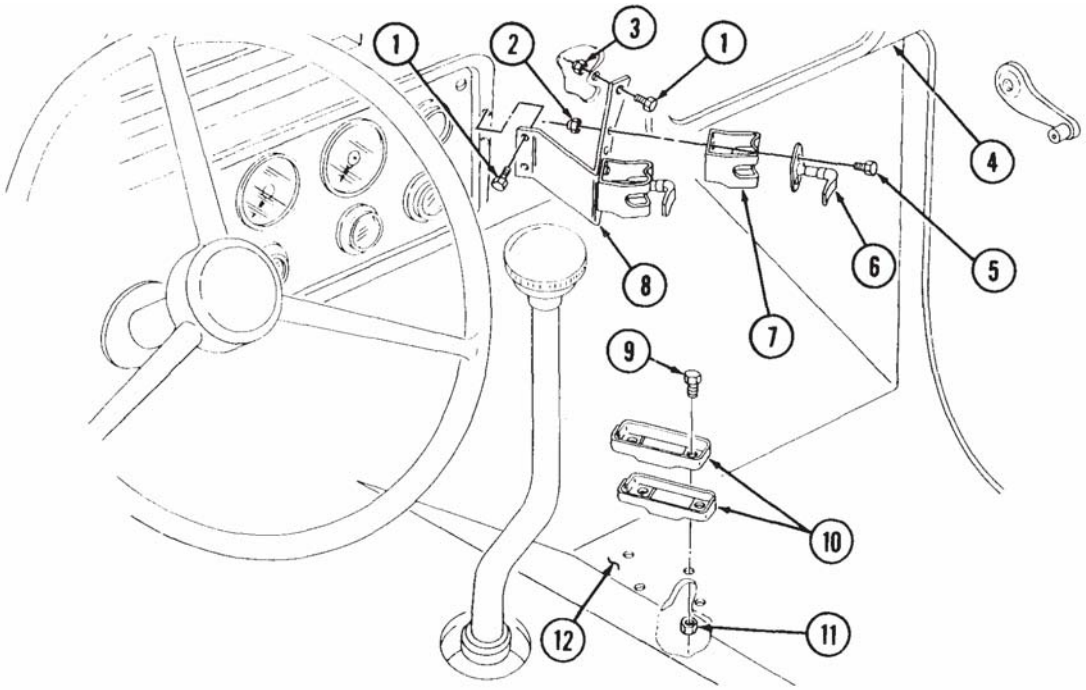

14-36. FIRE EXTINGUISHER MOUNTING KIT REPLACEMENT

THIS TASK COVERS:

a. Removal **b. Installation**

INITIAL SETUP

APPLICABLE MODELS
All

MATERIALS/PARTS
Four locknuts

REFERENCES (TM)
TM 9-2320-260-10
TM 9-2320-260-20P

EQUIPMENT CONDITION
Parking brake set (TM 9-2320-260-10).

a. Removal

1. Open two clamps (6) and remove fire extinguisher (1) from mounting bracket (2).
2. Remove four locknuts (3), screws (8), washers (7), and mounting bracket (2) from cab (5). Discard locknuts (3).

b. Installation

1. Install mounting bracket (2) on cab (5) with four washers (7), screws (8), and new locknuts (3).
2. Install fire extinguisher (1) on mounting bracket (2) and close two clamps (6).
3. Tighten or loosen adjusting screws (4) to hold fire extinguisher (1) in place.

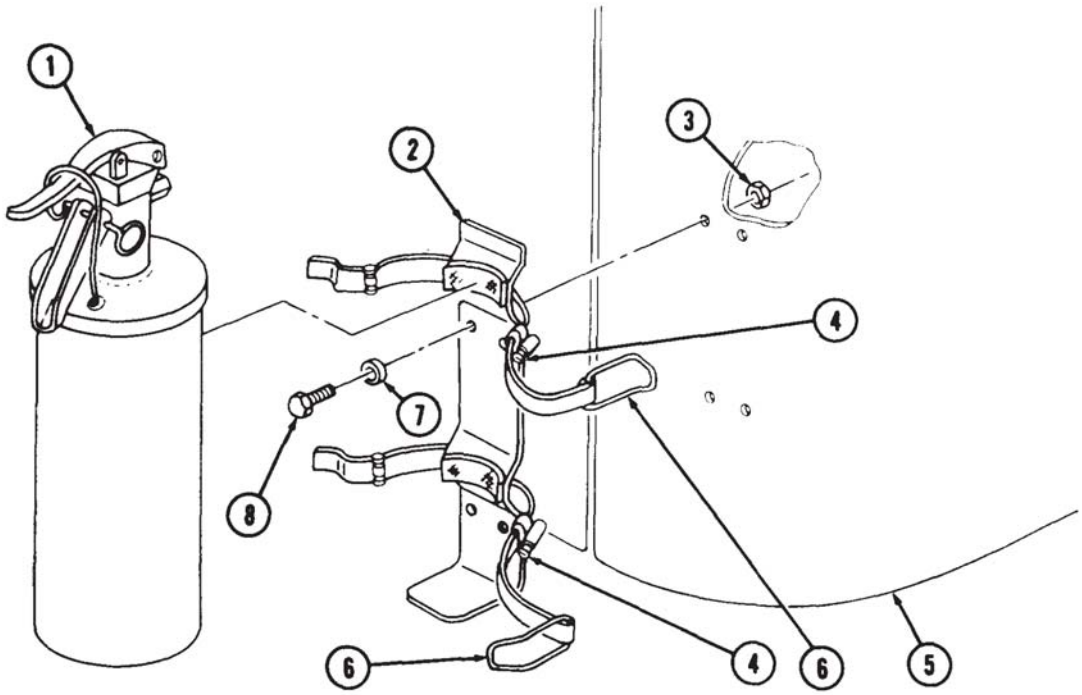

Section V. MINI LIGHTING KITS MAINTENANCE

14-37. MINI LIGHTING KITS MAINTENANCE INDEX

PARA. NO.	TITLE	PAGE NO.
14-38.	Intermediate Turn Signal Light Replacement	14-72
14-39.	Front and Rear Side Marker Lights Replacement	14-74

14-38. INTERMEDIATE TURN SIGNAL LIGHT REPLACEMENT

THIS TASK COVERS:

a. Removal **b.Installation**

INITIAL SETUP

APPLICABLE MODELS
All

MATERIALS/PARTS
Two O-rings
Two screw-assembled lockwashers
Four locknuts
Seal
Lockwasher

REFERENCES (TM)
TM 9-2320-260-10
TM 9-2320-260-20P

EQUIPMENT CONDITION
- Parking brake set (TM 9-2320-260-10).
- Battery ground cable disconnected (para. 4-48).

a. Removal

1. Remove two lenses (2), O-rings (3), and lamp (1) from lamp housing (4). Discard O-rings (3).
2. Remove four locknuts (11), screws (8), and cover (13) from fender (10) and hood (9). Discard locknuts (11).
3. Disconnect lead (15) from wire (14).
4. Remove grommet (7) from lead (15), leads (12), and fender (10).
5. Remove nut (17), lockwasher (18), lamp housing (4), and seal (5) from brushguard (6). Discard lockwasher (18) and seal (5).
6. Remove two screw-assembled lockwashers (16) and brushguard (6) from hood (9). Discard screw-assembled lockwashers (16).

b. Installation

NOTE

Ensure red lens on intermediate turn signal light is installed facing rear of vehicle.

1. Install brushguard (6) on hood (9) with two new screw-assembled lockwashers (16).
2. Install new seal (5) and lamp housing (4) on brushguard (6) with new lockwasher (18) and nut (17).
3. Insert lead (15) through hole in fender (10) and connect to wire (14).
4. Place grommet (7) around lead (15) and leads (12), and install on fender (10).

14-38. INTERMEDIATE TURN SIGNAL LIGHT REPLACEMENT (Contd)

5. Install cover (13) on fender (10) and hood (9) with four screws (8) and new locknuts (11).
6. Install lamp (1), two new O-rings (3), and lenses (2) on lamp housing (4).

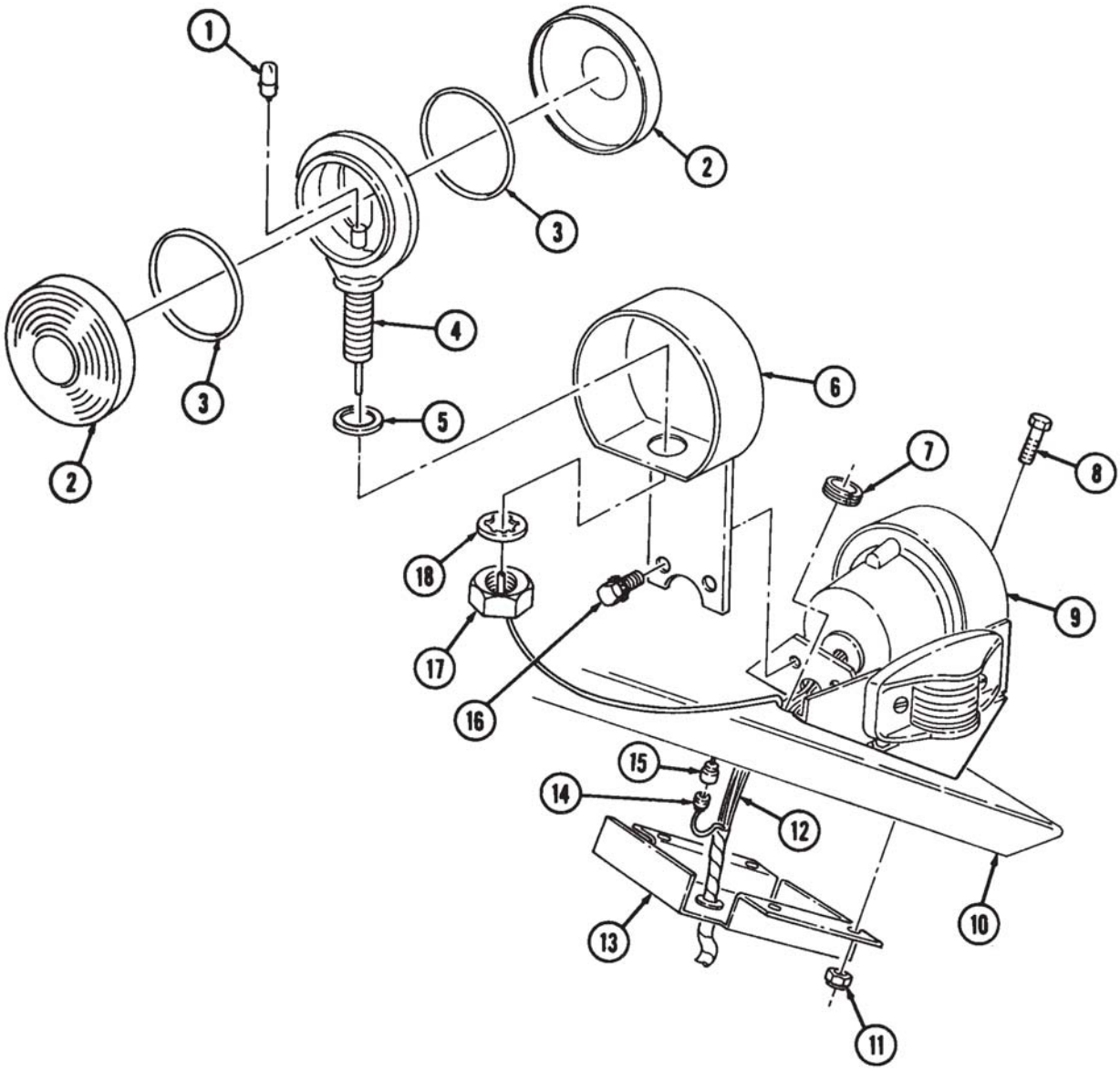

FOLLOW-ON TASK: Connect battery ground cable (para. 4-48).

14-39. FRONT AND REAR SIDE MARKER LIGHTS REPLACEMENT

THIS TASK COVERS:

a. Front Side Marker Lights Removal
b. Front Side Marker Lights Installation
c. Rear Side Marker Lights Removal
d. Rear Side Marker Lights Installation

INITIAL SETUP

APPLICABLE MODELS
All

MATERIALS/PARTS
Seven locknuts
Fourteen lockwashers
Four clips
Two gaskets

REFERENCES (TM)
TM 9-2320-260-10
TM 9-2320-260-20P

EQUIPMENT CONDITION
- Parking brake set (TM 9-2320-260-10).
- Battery ground cable disconnected (para. 4-48).

a. Front Side Marker Lights Removal

1. Remove four locknuts (16), screws (14), and cover (20) from hood (11) and fender (15). Discard locknuts (16).
2. Disconnect lead (19) from wire (21).
3. Remove grommet (23) from lead (19), leads (22), and fender (15).
4. Remove two screws (9) and lens frame (8) from base (4).
5. Remove two clips (7) and lens (10) from lens frame (8). Discard clips (7).
6. Remove lamp (6) from base (4).
7. Remove four nuts (12), lockwashers (13), screws (5), base (4), and gasket (3) from bracket (2). Discard lockwashers (13) and gasket (3).
8. Remove locknut (18), screw (1), two lockwashers (17), and bracket (2) from fender (15) and hood (11). Discard locknut (18) and lockwashers (17).

b. Front Side Marker Lights Installation

1. Install bracket (2) on fender (15) and hood (11) with two new lockwashers (17), screw (1), and new locknut (18).
2. Install new gasket (3) and base (4) on bracket (2) with four screws (5), new lockwashers (13), and nuts (12).
3. Install lamp (6) on base (4).
4. Install lens (10) in lens frame (8) with two new clips (7).
5. Install lens frame (8) on base (4) with two screws (9).
6. Insert lead (19) through hole in fender (15) and connect to wire (21).
7. Place grommet (23) around lead (19) and leads (22), and install on fender (15).
8. Install cover (20) on fender (15) and hood (11) with four screws (14) and new locknuts (16).

14-39. FRONT AND REAR SIDE MARKER LIGHTS REPLACEMENT (Contd)

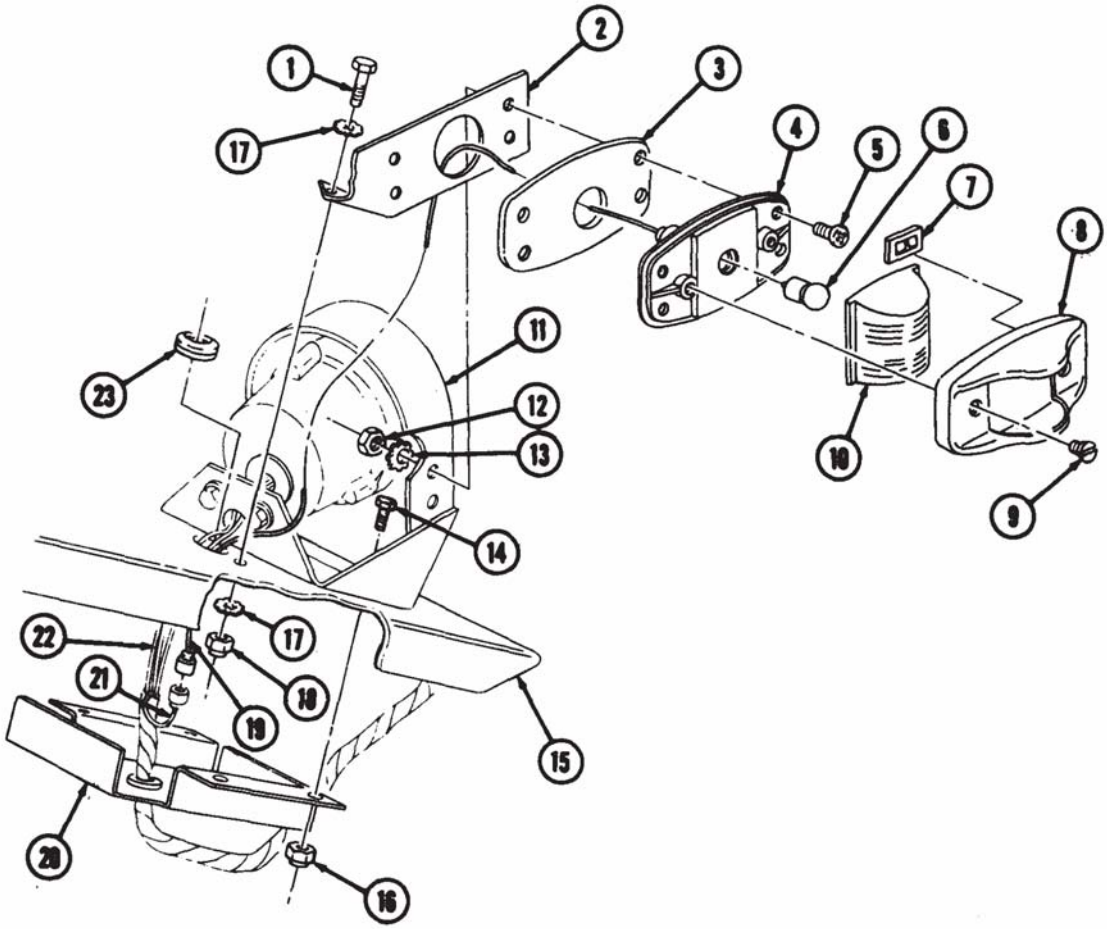

14-39. FRONT AND REAR SIDE MARKER LIGHTS REPLACEMENT (Contd)

c. Rear Side Marker Lights Removal

NOTE

All rear side marker lights are replaced the same way. Mounting brackets may differ.

1. Disconnect lead (5) from connector (4).
2. Remove two screws (13) and lens frame (12) from base (9).
3. Remove two clips (14) and lens (11) from lens frame (12). Discard clips (14).
4. Remove lamp (10) from base (9).
5. Remove four nuts (17), lockwashers (16), screws (15), base (9), and gasket (8) from bracket (7). Discard lockwashers (16) and gasket (8).
6. Remove two locknuts (6), screws (2), four lockwashers (3), and bracket (7) from body (1). Discard locknuts (6) and lockwashers (3).

d. Rear Side Marker Lights Installation

1. Install bracket (7) on body (1) with four new lockwashers (3), two screws (2), and new locknuts (6).
2. Install new gasket (8) and base (9) on bracket (7) with four screws (15), new lockwashers (16), and nuts (17).
3. Install lamp (10) on base (9).
4. Install lens (11) on lens frame (12) with two new clips (14).
5. Install lens frame (12) on base (9) with two screws (13).
6. Connect lead (5) to connector (4).

14-39. FRONT AND REAR SIDE MARKER LIGHTS REPLACEMENT (Contd)

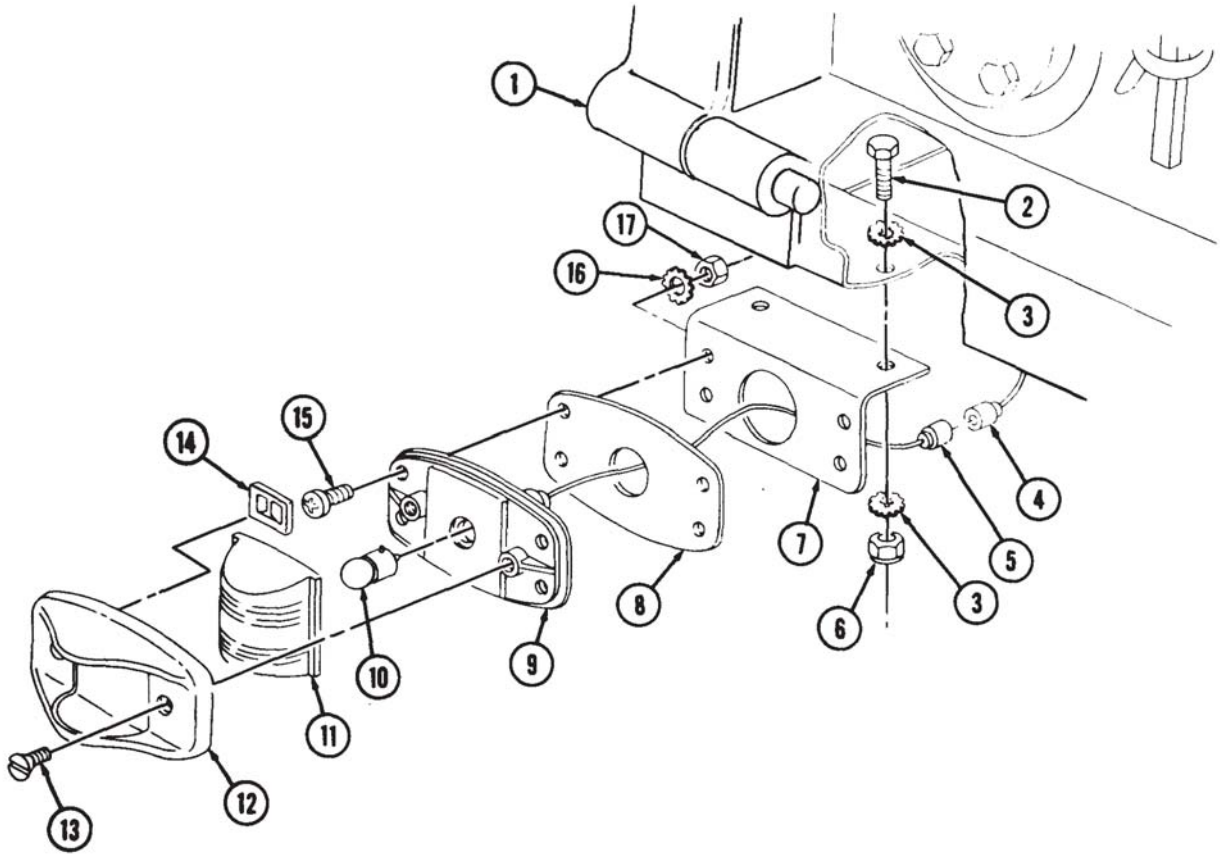

FOLLOW-ON TASK: Connect battery ground cable (para. 4-48).

Section VI. 100-AMP ALTERNATOR KIT MAINTENANCE

14-40. 100-AMP ALTERNATOR KIT MAINTENANCE INDEX

PARA. NO.	TITLE	PAGE NO.
14-41.	100-Amp Alternator Replacement	14-78
14-42.	100-Amp Alternator Cable and Harness Replacement	14-80
14-43.	100-Amp Alternator Regulator Replacement	14-82

14-41. 100-AMP ALTERNATOR REPLACEMENT

THIS TASK COVERS:

a. Removal **b. Installation**

INITIAL SETUP

APPLICABLE MODELS
All

MATERIALS/PARTS
Two lockwashers
Two locknuts

REFERENCES (TM)
TM 9-2320-260-10
TM 9-2320-260-20P

EQUIPMENT CONDITION
- Parking brake set (TM 9-2320-260-10).
- Hood raised and secured (TM 9-2320-260-10).
- Battery ground cable disconnected (para. 4-48).
- Alternator drivebelts removed (para. 4-4).

GENERAL SAFETY INSTRUCTIONS
Support alternator prior to removal.

WARNING

Support alternator prior to removal of mounting hardware. Failure to do so may result in injury to personnel or damage to equipment.

a. Removal

1. Disconnect cable (1) from alternator (11).
2. Remove two screws (2), lockwashers (3), washers (4), and adjusting link (5) from engine (9) and alternator (11). Discard lockwashers (3).
3. Remove locknut (8), washer (7), and screw (6) from each side of alternator (11) and alternator mounting bracket (10). Discard locknuts (8).
4. Remove alternator (11) from alternator mounting bracket (10).

b. Installation

1. Position alternator (11) on alternator mounting bracket (10) and install with screw (6), washer (7), and new locknut (8) on each side of alternator (11) and alternator mounting bracket (10). Finger tighten locknuts (8).
2. Install adjusting link (5) on alternator (11) and engine (9) with two washers (4), new lockwashers (3), and screws (2). Finger tighten screws (2).
3. Connect cable (1) to alternator (11).

14-41. 100-AMP ALTERNATOR REPLACEMENT (Contd)

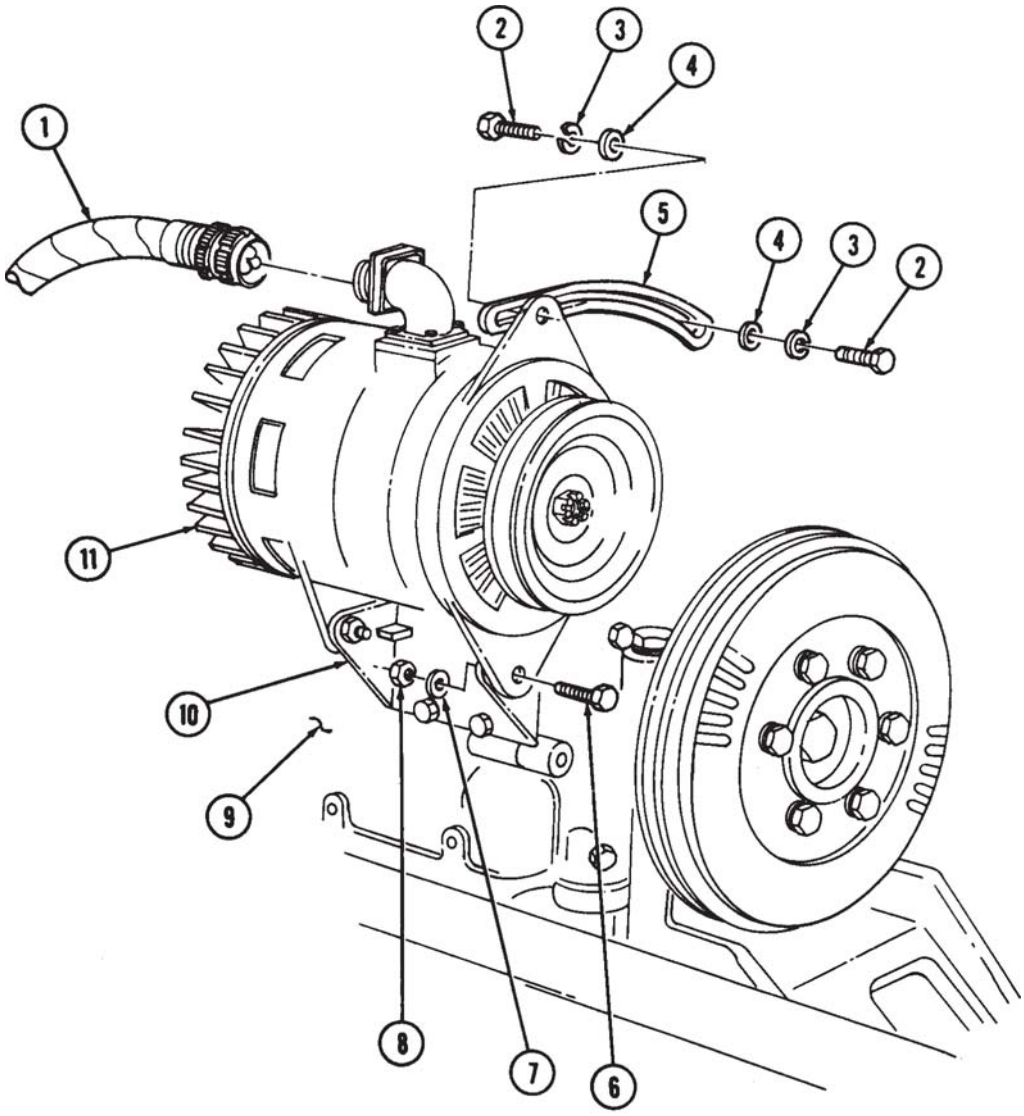

FOLLOW-ON TASKS:
- Install alternator drivebelts (para. 4-4).
- Connect battery ground cable (para. 4-48).
- Check operation of alternator gage (TM 9-2320-260-10).

14-42. 100-AMP ALTERNATOR CABLE AND HARNESS REPLACEMENT

THIS TASK COVERS:

a. Removal **b. Installation**

INITIAL SETUP

APPLICABLE MODELS
All

MATERIALS/PARTS
Two locknuts
Two lockwashers
Two tiedown straps (Appendix C, Item 33)

REFERENCES (TM)
TM 9-2320-260-10
TM 9-2320-260-20P

EQUIPMENT CONDITION
- Parking brake set (TM 9-2320-260-10).
- Hood raised and secured (TM 9-2320-260-10).
- Battery ground cable disconnected (para. 4-48).

a. Removal

1. Disconnect lead (4) from connector (5).
2. Disconnect cable (2) from alternator (6) and regulator (1).
3. Remove two tiedown straps (10) from cable (2) and lead (4). Discard tiedown straps (10).
4. Remove two locknuts (8), screws (3), clamps (9), cable (2), and lead (4) from brackets (7). Discard locknuts (8).
5. Disconnect harness (11) from regulator (1).
6. Remove screw (12), clamp (13), and harness (11) from firewall (14).
7. Remove nut (20), lockwasher (19), and leads (18) and (15) from starter solenoid (16). Discard lockwasher (19).
8. Remove nut (23), lockwasher (22), and ground wire (21) from starter (17). Discard lockwasher (22).

b. Installation

1. Install ground wire (21) on starter (17) with new lockwasher (22) and nut (23).
2. Install leads (15) and (18) on starter solenoid (16) with new lockwasher (19) and nut (20).
3. Connect harness (11) to regulator (1).
4. Install harness (11) on firewall (14) with clamp (13) and screw (12).
5. Connect cable (2) to regulator (1) and alternator (6).
6. Connect lead (4) to connector (5).
7. Install cable (2) and lead (4) on brackets (7) with two clamps (9), screws (3), and new locknuts (8).
8. Install two new tiedown straps (10) on cable (2) and lead (4).

14-42. 100-AMP ALTERNATOR CABLE AND HARNESS REPLACEMENT (Contd)

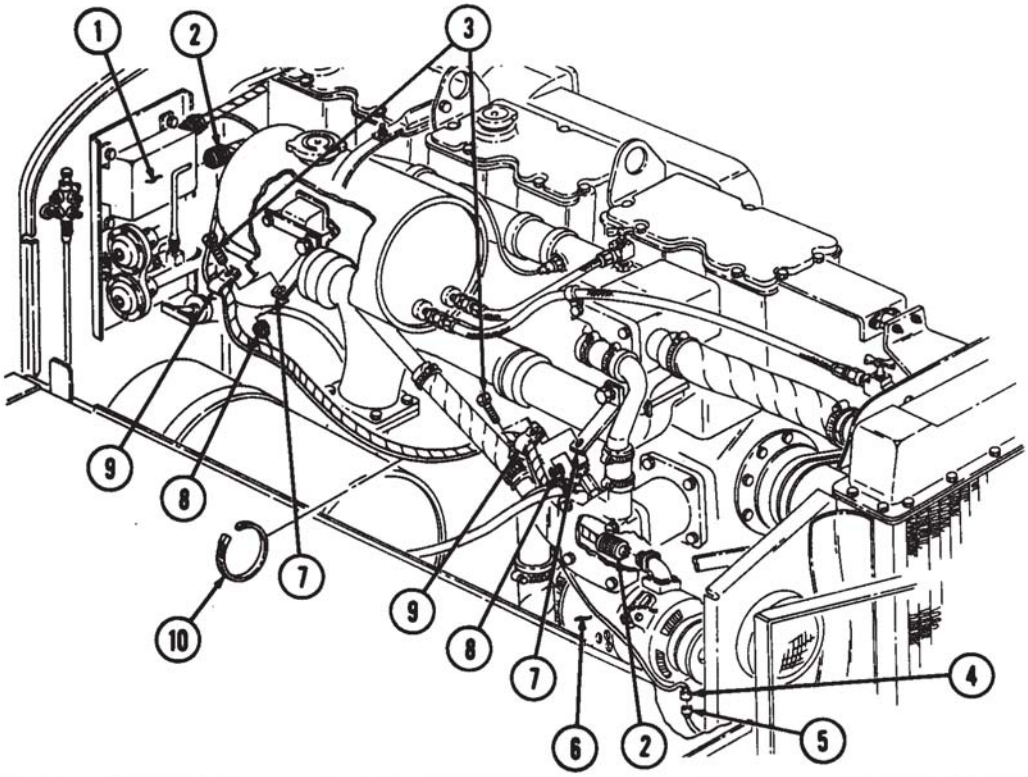

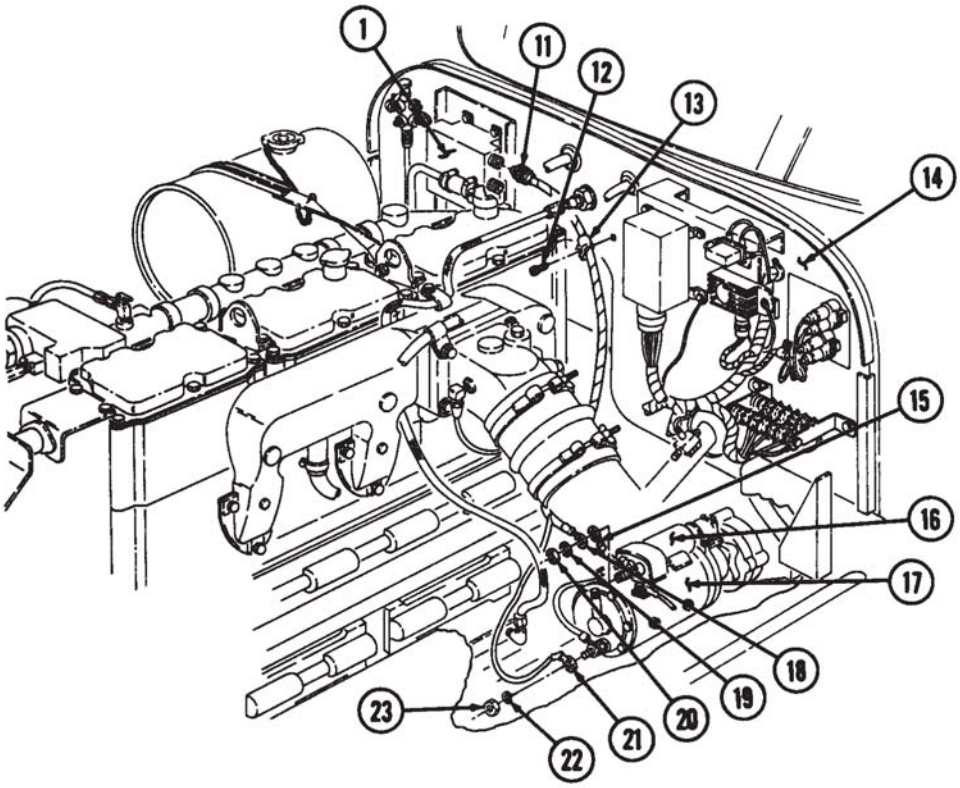

FOLLOW-ON TASK: Connect battery ground cable (para. 4-48).

14-43. 100-AMP ALTERNATOR REGULATOR REPLACEMENT

THIS TASK COVERS:

a. Removal **b. Installation**

INITIAL SETUP

APPLICABLE MODELS
All

MATERIALS/PARTS
Eight lockwashers
Four locknuts

REFERENCES (TM)
TM 9-2320-260-10
TM 9-2320-260-20P

EQUIPMENT CONDITION
- Parking brake set (TM 9-2320-260-10).
- Hood raised and secured (TM 9-2320-260-10).
- Battery ground cable disconnected (para. 4-48).
- Glove compartment removed (para. 11-33).

a. Removal

1. Disconnect cable (8) and harness (7) from regulator (9).

NOTE

Assistant will help with step 2.

2. Remove four locknuts (4), screws (6), lockwashers (5), and regulator (9) from mounting plate (1) and firewall (3). Discard locknuts (4) and lockwashers (5).
3. Remove four screws (11), lockwashers (10), and two brackets (2) from regulator (9). Discard lockwashers (10).

b. Installation

1. Install two brackets (2) on regulator (9) with four new lockwashers (10) and screws (11).

NOTE

Assistant will help with step 2.

2. Install regulator (9) on mounting plate (1) and firewall (3) with four new lockwashers (5), screws (6), and new locknuts (4).
3. Connect cable (8) and harness (7) to regulator (9).

14-43. 100-AMP ALTERNATOR REGULATOR REPLACEMENT (Contd)

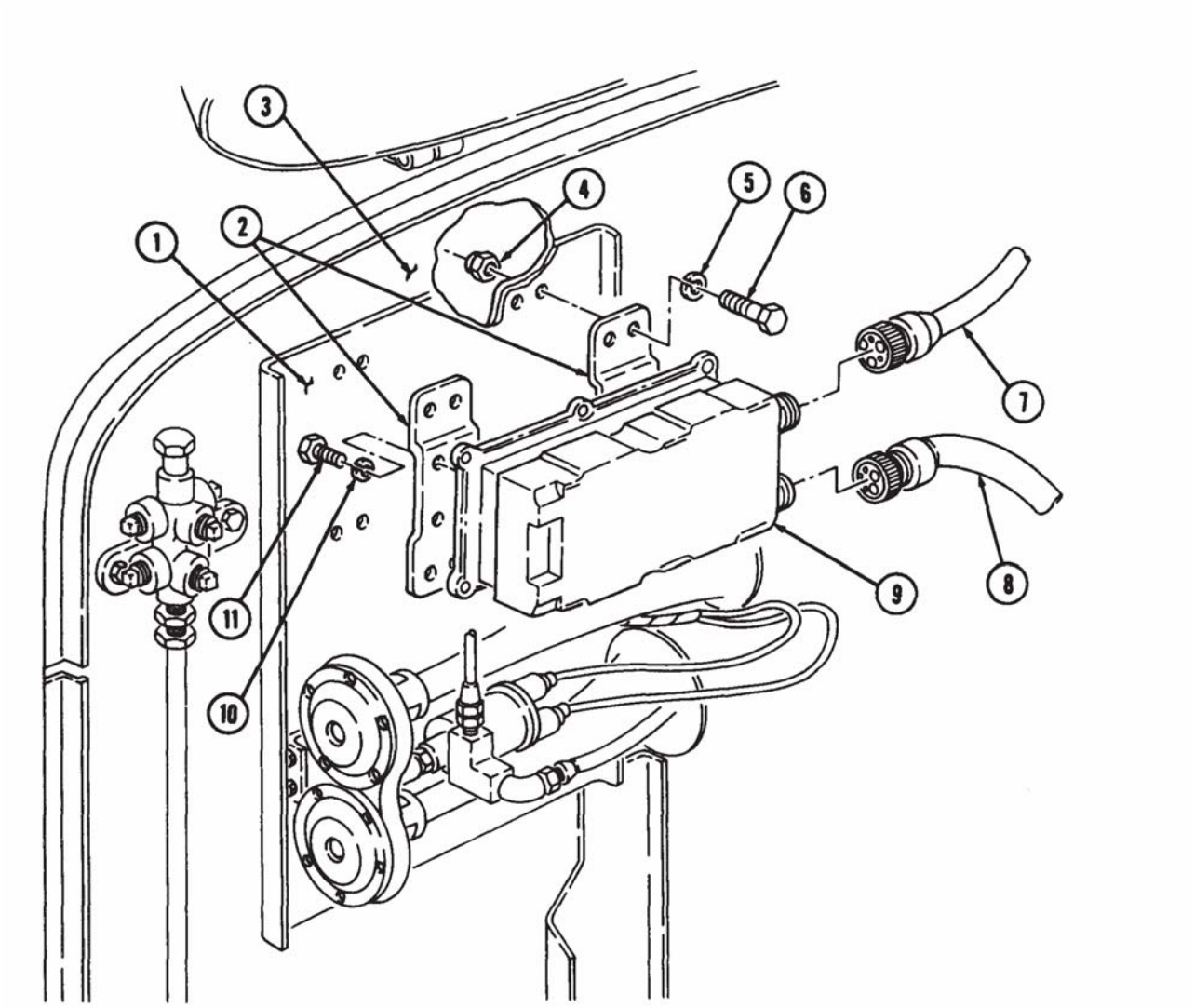

FOLLOW-ON TASKS: • Connect battery ground cable (para. 4-48).
• Install glove compartment (para. 11-33).

Section VII. TROOP SEAT MOUNTING KIT AND SEATBELT KITS MAINTENANCE

14-44. TROOP SEAT MOUNTING KIT AND SEATBELT KITS MAINTENANCE INDEX

PARA. NO.	TITLE	PAGE NO.
14-45.	Fixed Seatbelt Kit Replacement	14-84
14-46.	Floating Seatbelt Kit Replacement	14-86
14-47.	Troop Seat and Side Rack Kit Replacement	14-88

14-45. FIXED SEATBELT KIT REPLACEMENT

THIS TASK COVERS:

a. Driver's Seatbelt Removal
b. Driver's Seatbelt Installation
c. Companion Seatbelt Removal
d. Companion Seatbelt Installation

INITIAL SETUP

APPLICABLE MODELS
All

MATERIALS/PARTS
Four locknuts

REFERENCES (TM)
TM 9-2320-260-10
TM 9-2320-260-20P

EQUIPMENT CONDITION
- Parking brake set (TM 9-2320-260-10).
- Companion seat removed (para. 11-31).

a. Driver's Seatbelt Removal

1. Pull driver's seat (9) to full forward position.
2. Remove locknut (13), screw (10), two washers (11), and seatbelt (12) from back cab panel channel (8). Discard locknut (13).
3. Remove locknut (14), washer (15), screw (5), seatbelt (7), and spacer (4) from back cab panel channel (6). Discard locknut (14).

b. Driver's Seatbelt Installation

1. Install spacer (4) and seatbelt (7) on back cab panel channel (6) with screw (5), washer (15), and new locknut (14).
2. Install seatbelt (12) on back cab panel channel (8) with two washers (11), screw (10), and new locknut (13).

14-45. FIXED SEATBELT KIT REPLACEMENT (Contd)

C. Companion Seatbelt Removal

1. Remove locknut (18), screw (16), washer (17), seatbelt (19), and spacer (2) from back cab panel channel (3). Discard locknut (18).
2. Remove locknut (23), screw (20), washer (21), and seatbelt (22) from back cab panel channel (1). Discard locknut (23).

d. Companion Seatbelt Installation

1. Install seatbelt (22) on back cab panel channel (1) with screw (20), washer (21), and new locknut (23).
2. Install spacer (2) and seatbelt (19) on back cab panel channel (3) with screw (16), washer (17), and new-locknut (18).

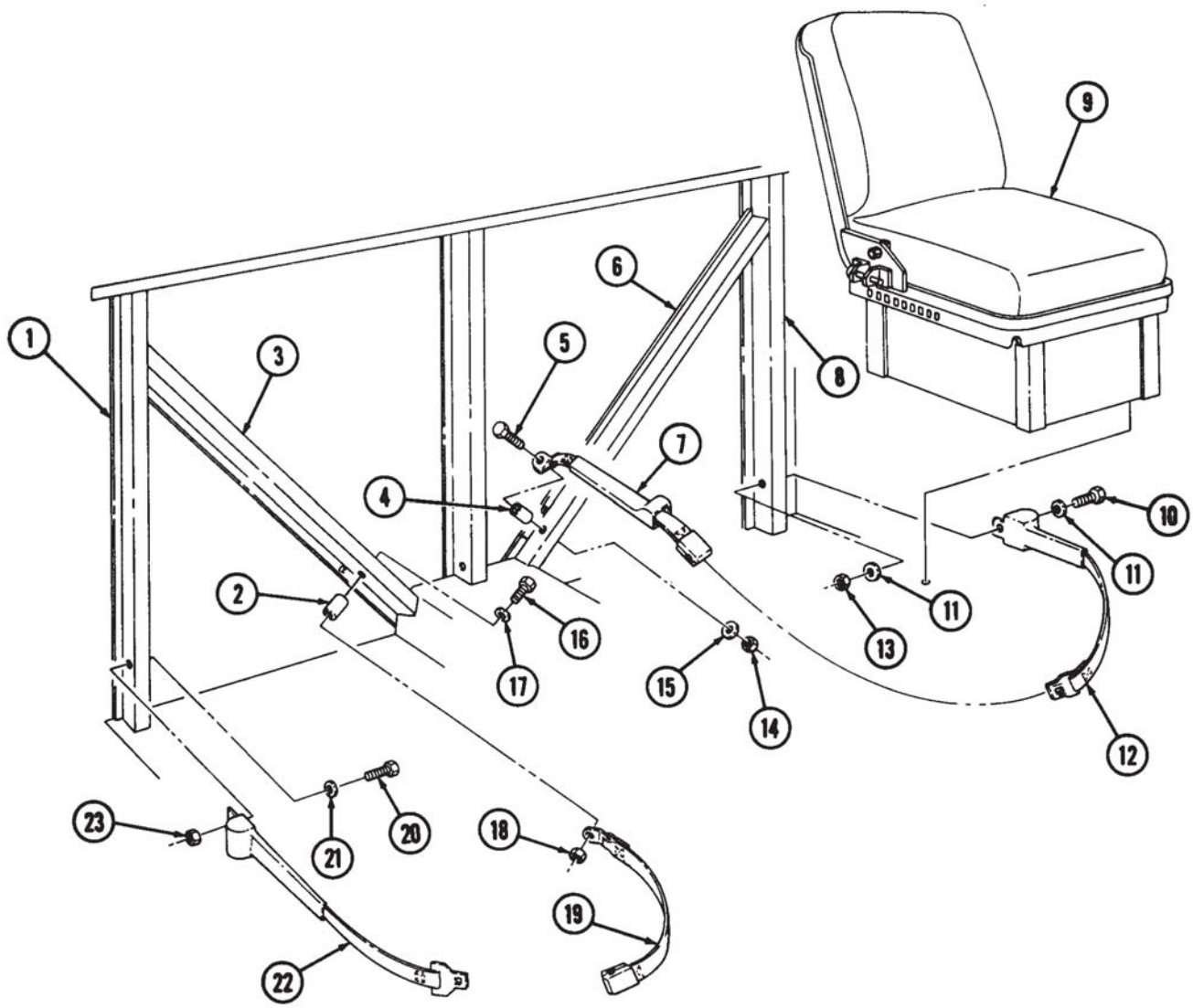

FOLLOW-ON TASK: Install companion seat (para. 11-31).

14-46. FLOATING SEATBELT KIT REPLACEMENT

THIS TASK COVERS:

a. Driver's Seatbelt Removal
b. Driver's Seatbelt Installation
c. Companion Seatbelt Removal
d. Companion Seatbelt Installation

INITIAL SETUP

APPLICABLE MODELS
All

MATERIALS/PARTS
Six locknuts

REFERENCES (TM)
TM 9-2320-260-10
TM 9-2320-260-20P

EQUIPMENT CONDITION
Parking brake set (TM 9-2320-260-10).

a. Driver's Seatbelt Removal

NOTE

Perform step 1 for driver's seat with long retaining rod.

1. Remove screw (41), washer (40), retractor (42), and tether (39) from retaining rod (12).
2. Remove screw (13), two washers (14), retractor (15), tether (18), and spacer (19) from retaining rod (12).
3. Remove locknut (25), screw (16), two washers (17), and tether (18) from cab channel member (11). Discard locknut (25).
4. Remove screw (23), two washers (22), anchor (21), and tether (20) from retaining rod (12).
5. Remove locknut (7), screw (24), two washers (8), tether (20), and spacer (9) from cab channel member (10). Discard locknut (7).

b. Driver's Seatbelt Installation

1. Install spacer (9) in cab channel member (10).
2. Install tether (20) on cab channel member (10) with two washers (8), screw (24), and new locknut (7). Tighten locknut (7) 20-25 lb-ft (27-34 N.m).
3. Install tether (20) and anchor (21) on retaining rod (12) with two washers (22) and screw (23), Tighten screw (23) 40-45 lb-ft (54-61 N.m).
4. Install tether (18) on cab channel member (11) with two washers (17), screw (16), and new locknut (25). Tighten locknut (25) 20-25 lb-ft (27-34 N.m).
5. Install spacer (19), tether (18), and retractor (15) on retaining rod (12) with two washers (14) and screw (13). Tighten screw (13) 40-45 lb-ft (54-61 N.m).

NOTE

Perform step 6 for driver's seat with long retaining rod.

6. Install tether (39) and retractor (42) on retaining rod (12) with washer (40) and screw (41). Tighten screw (41) 40-45 lb-ft (54-61 N.m).

c. Companion Seatbelt Removal

1. Remove locknut (4), screw (28), three washers (3), and anchor (27) from bracket (26). Discard locknut (4).
2. Remove locknut (30), screw (6), two washers (5), bracket (26), and spacer (29) from cab channel member (2). Discard locknut (30).
3. Remove locknut (31), screw (34), three washers (32), and retractor (33) from bracket (37). Discard locknut (31).

14-46. FLOATING SEATBELT KIT REPLACEMENT (Contd)

4. Remove locknut (35), screw (38), two washers (36), and bracket (37) from cab channel member (1). Discard locknut (35).

d. Companion Seatbelt Installation

1. Install bracket (37) on cab channel member (1) with two washers (36), screw (38), and new locknut (35). Tighten locknut (35) 20-25 lb-ft (27-34 N.m).
2. Install retractor (33) on bracket (37) with three washers (32), screw (34), and new locknut (31). Tighten locknut (31) 20-25 lb-ft (27-34 N.m).
3. Install spacer (29) in cab channel member (2).
4. Install bracket (26) on cab channel member (2) with two washers (5), screw (6), and new locknut (30). Tighten locknut (30) 20-25 lb-ft (27-34 N.m).
5. Install anchor (27) on bracket (26) with three washers (3), screw (28), and new locknut (4). Tighten locknut (4) 20-25 lb-ft (27-34 N.m).

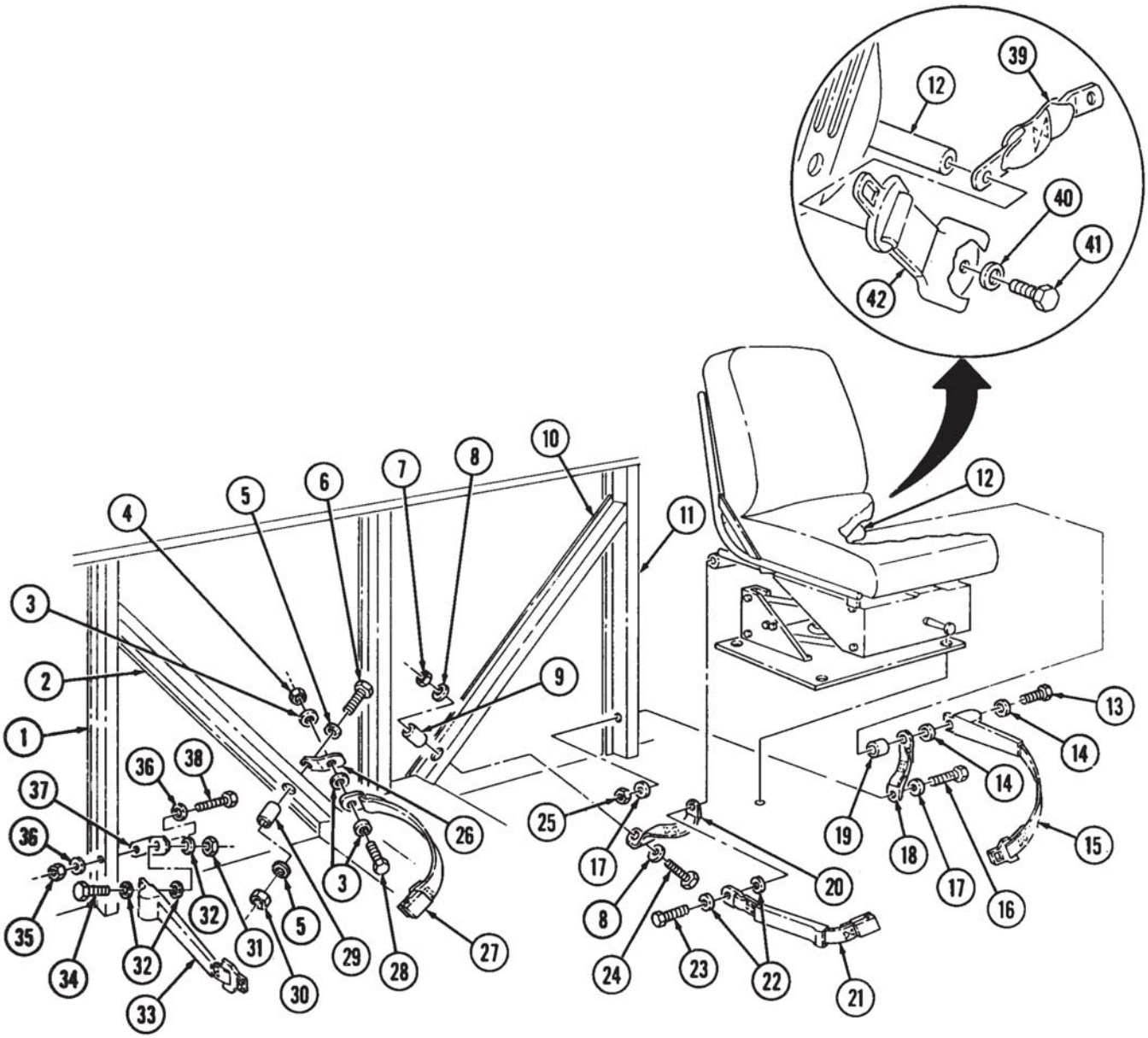

14-47. TROOP SEAT AND SIDE RACK KIT REPLACEMENT

THIS TASK COVERS:

a. Troop Seat Removal
b. Side Rack Removal
c. Side Rack Installation
d. Troop Seat Installation

INITIAL SETUP

APPLICABLE MODELS
M817

MATERIALS/PARTS
Thirty-three locknuts

REFERENCES (TM)
TM 9-2320-260-10
TM 9-2320-260-20P

EQUIPMENT CONDITION
Parking brake set (TM 9-2320-260-10),

a. Troop Seat Removal

NOTE

Assistant will help with steps 1 and 2.

1. Release two latches (2) and remove troop seat (12) from side rack (3).
2. Remove troop seat (12) from side panel (7).
3. Remove five locknuts (10), screws (11), and legs (9) from supports (5). Discard locknuts (10).
4. Remove eight locknuts (8), screws (4), and four hinges (6) from supports (5). Discard locknuts (8).
5. Remove twelve locknuts (8), screws (4), and five supports (5) from four seatboards (1). Discard locknuts (8).

b. Side Rack Removal

1. Remove strap (20) from pocket (19).

NOTE

Assistant will help with step 2.

2. Remove five pockets (19) from side panel (7).
3. Remove eight locknuts (18), screws (17), and five pockets (19) from board (13). Discard locknuts (18).
4. Remove two nuts (16), screws (14), latches (2), and washers (15) from board (13).

c. Side Rack Installation

1. Install two washers (15), latches (2), screws (14), and nuts (16) on board (13).
2. Install five pockets (19) on board (13) with eight screws (17) and new locknuts (18).

NOTE

Assistant will help with step 3.

3. Install five pockets (19) on side panel (7).
4. Install strap (20) on pocket (19).

14-47. TROOP SEAT AND SIDE RACK KIT REPLACEMENT (Contd)

d. Troop Seat Installation

1. Position five supports (5) on four seatboards (1) and install with twelve screws (4) and new locknuts (8).
2. Install four hinges (6) on supports (5) with eight screws (4) and new locknuts (8).
3. Install five legs (9) on supports (5) with five screws (11) and new locknuts (10).

NOTE

Assistant will help with steps 4 and 5.

4. Place hinges (6) on troop seat (12) in brackets of side rack (3).
5. Raise troop seat (12) into stow position and hold with two latches (2).

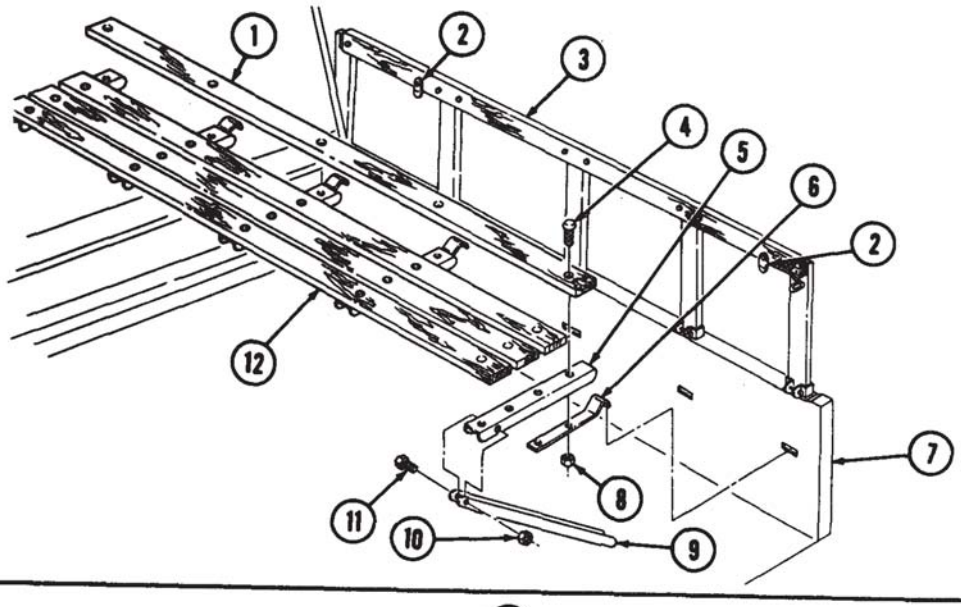

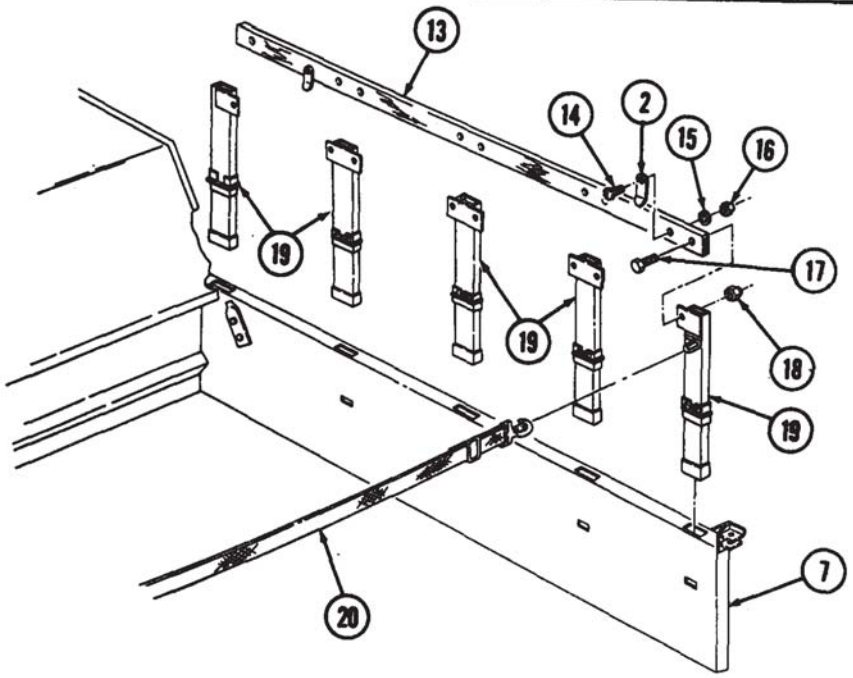

Section VIII. HAND AIRBRAKE KIT MAINTENANCE

14-48. HAND AIRBRAKE KIT REPLACEMENT

THIS TASK COVERS:

a. Removal **b. Installation**

INITIAL SETUP

APPLICABLE MODELS
All (except M815, M818, M819)

MATERIALS/PARTS
Three locknuts
Antiseize tape (Appendix C, Item 30)

REFERENCES (TM)
TM 9-2320-260-10
TM 9-2320-260-20P

EQUIPMENT CONDITION
- Parking brake set (TM 9-2320-260-10).
- Hood raised and secured (TM 9-2320-260-10).
- Air reservoirs drained (TM 9-2320-260-10).

GENERAL SAFETY INSTRUCTIONS
Do not disconnect air lines before draining air reservoirs.

a. Removal

WARNING

Do not disconnect air lines before draining air reservoirs. Small parts under pressure may shoot out with high velocity, causing injury to personnel.

1. Disconnect air lines (9) and (10) from two adapters (8).
2. Remove two locknuts (1), bracket (2), control valve (7), and strap (3) from steering column (4). Discard locknuts (1).
3. Remove two adapters (8) from control valve (7).
4. Remove air line (9) and elbow (5) from fitting (6).
5. Disconnect air line (10) from union (18).
6. Remove locknut (13), screw (16), two clamps (14), and air line (17) horn bracket (15). Discard locknut (13).
7. Disconnect air line (17) from union (18) and elbow (12).
8. Remove elbow (12) from check valve (11).

NOTE

Assistant will help with step 9.

9. Remove nut (20) and union (18) from firewall (19).

b. Installation

NOTE

Assistant will help with step 1.

1. Apply antiseize tape to male threads of adapters (8), elbows (5) and (12), and union (18).
2. Install union (18) on firewall (19) with nut (20).
3. Install elbow (12) on check valve (11).
4. Connect air line (17) on elbow (12) and union (18).
5. Install air line (17) on bracket (15) with two clamps (14), screw (16), and new locknut (13).

14-48. HAND AIRBRAKE KIT REPLACEMENT (Contd)

6. Install elbow (5) on fitting (6).
7. Connect air line (9) to elbow (5).
8. Connect air line (10) to union (18).
9. Install two adapters (8) on control valve (7).
10. Install strap (3), control valve (7), and bracket (2) on steering column (4) with two new locknuts (1). Finger tighten locknuts (1) only.
11. Connect air lines (9) and (10) to two adapters (8) and tighten new locknuts (1).

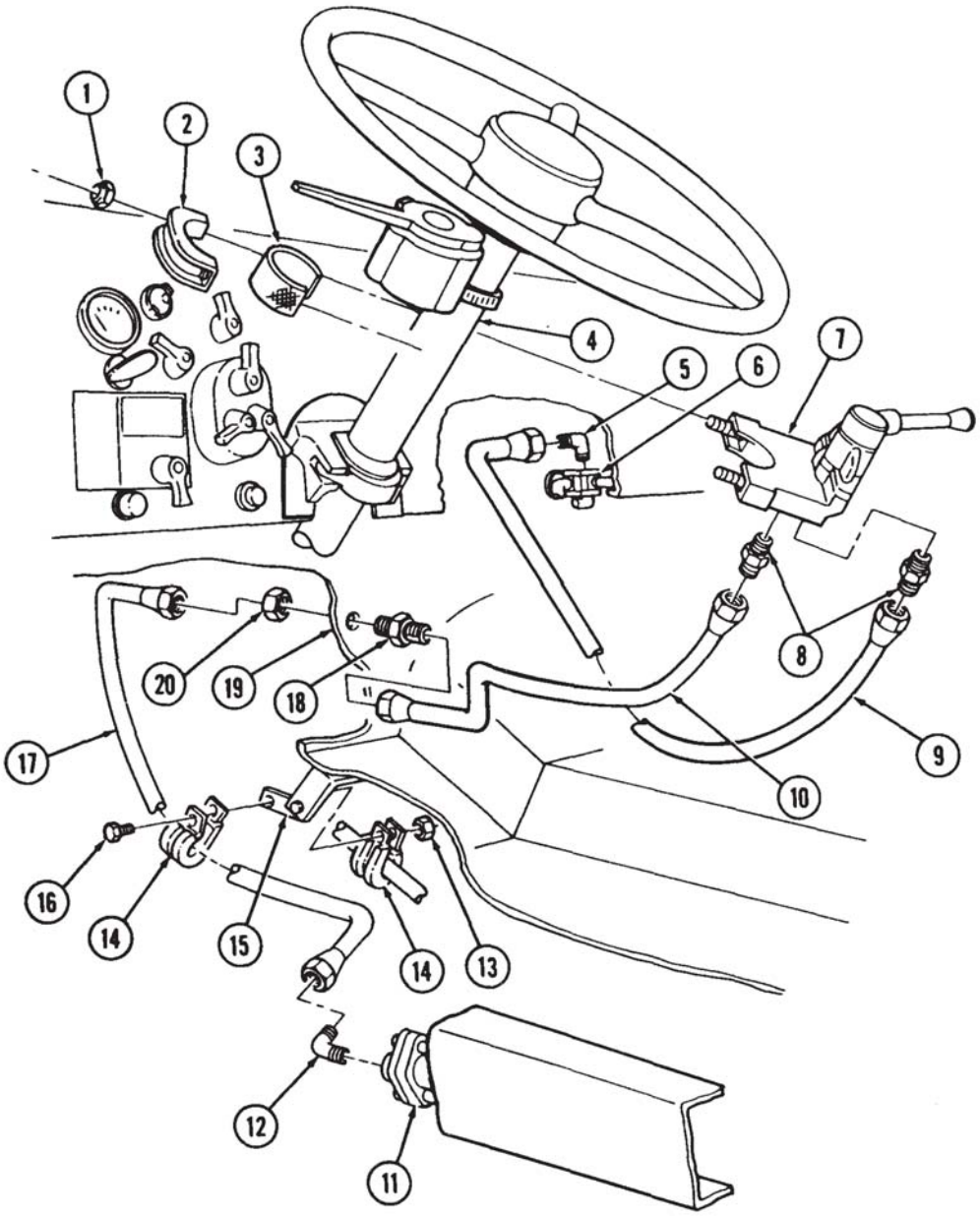

FOLLOW-ON TASK: Start engine (TM 9-2320-260-10). Allow for normal air pressure and check for leaks.

Section IX. TACHOGRAPH KIT MAINTENANCE

14-49. TACHOGRAPH KIT MAINTENANCE

THIS TASK COVERS:

a. Tachograph Chart and Lamp Removal
b. Tachograph Removal
c. Instrument Cluster Removal
d. Instrument Cluster Installation
e. Tachograph Installation
f. Tachograph Chart and Lamp Installation
g. Tachograph Adjustment

INITIAL SETUP

APPLICABLE MODELS
All

MATERIALS/PARTS
Tachograph chart

REFERENCES (TM)
TM 9-2320-260-10
TM 9-2320-260-20P

EQUIPMENT CONDITION
- Parking brake set (TM 9-2320-260-10).
- Air reservoirs drained (TM 9-2320-260-10).
- Battery ground cable disconnected (para. 4-48).

GENERAL SAFETY INSTRUCTIONS
- Do not disconnect air lines before draining air reservoirs.

WARNING

Do not disconnect air lines before draining air reservoirs. Small parts under pressure may shoot out with high velocity, causing injury to personnel.

CAUTION

Do not drive vehicle without a tachograph chart installed in tachograph. Failure to comply may cause damage to tachograph.

a. Tachograph Chart and Lamp Removal

1. Turn key (16) 1/2-turn right and open tachograph (20).

NOTE

Take care not to fold, scratch, or write on tachograph chart when removing. Chart readings will become illegible if tachograph chart is damaged.

2. Lift lever (17) and remove tachograph chart (19) from tachograph (20) and tachometer coupling (15).
3. Lift lever(s) (14) and remove lamp(s) (18) horn tachograph (20).

b. Tachograph Removal

1. Disconnect oil pressure tube (6) horn oil pressure gage (13).
2. Turn four lock studs (22) 1/4-turn right and separate instrument cluster (21) from instrument panel (1).

NOTE

Tag all wires and driveshafts for installation.

3. Disconnect speedometer driveshaft (2) and tachometer driveshaft (3) from tachograph (20).
4. Disconnect lead (12) from wire (4).

14-49. TACHOGRAPH KIT MAINTENANCE (Contd)

5. Disconnect lead (11) from wire (5).
6. Remove screw (9), ground wire (10), and clamp (8) from bracket (7).
7. Remove two nuts (24), clamps (23), and tachograph (20) from instrument cluster (21).

c. Instmment Cluster Removal

For removal and disassembly of instrument cluster (21), refer to para. 4-7.

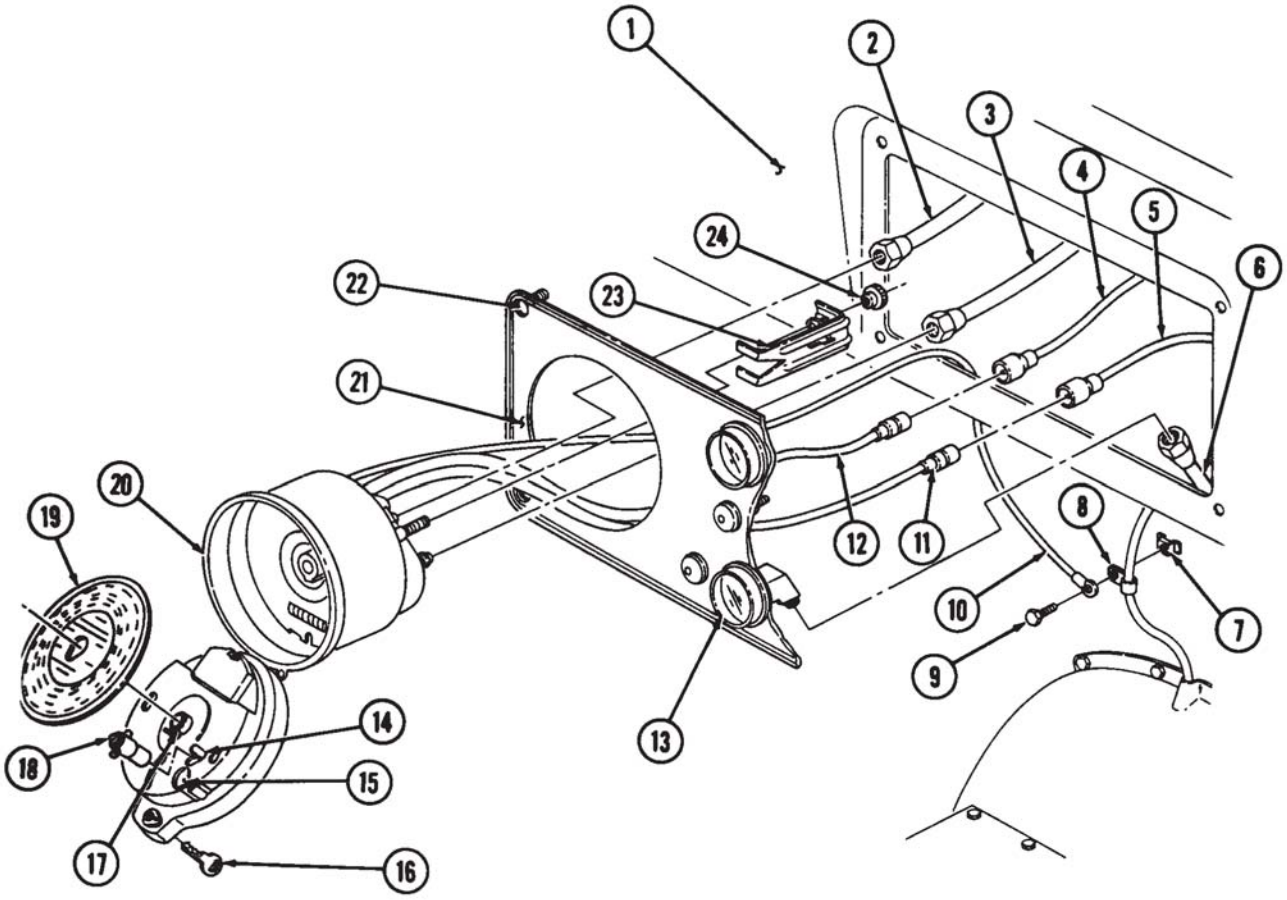

14-49. TACHOGRAPH KIT MAINTENANCE (Contd)

d. Instrument Cluster Installation

For assembly and installation of instrument cluster (21), refer to para. 4-7.

e. Tachograph Installation

1. Position tachograph (20) in instrument cluster (21) and install with two clamps (23) and nuts (24).
2. Install clamp (8) and ground wire (10) on bracket (7) with screw (9).
3. Connect lead (12) to wire (4).
4. Connect lead (11) to wire (5).
5. Connect speedometer driveshaft (2) and tachometer driveshaft (3) to tachograph (20).
6. Install instrument cluster (21) on instrument panel (1). Turn four lock studs (22) 1/4-turn left to lock in place.
7. Connect oil pressure tube (6) to oil pressure gage (13).

f. Tachograph Chart and Lamp Installation

NOTE

Take care not to fold, scratch, or write on tachograph chart when installing. Chart readings will become illegible if tachograph chart is damaged.

1. Install lamp(s) (18) in tachograph (20) and close lever(s) (14).
2. Place new tachograph chart (19) under tachometer coupling (15) and install on tachograph (20). Close lever (17).
3. Close tachograph (20) and lock with key (16).
4. Connect battery ground cable (para. 4-48), start engine (TM 9-2320-260-10), and check tachograph (20) operation. Adjust if necessary (task g).

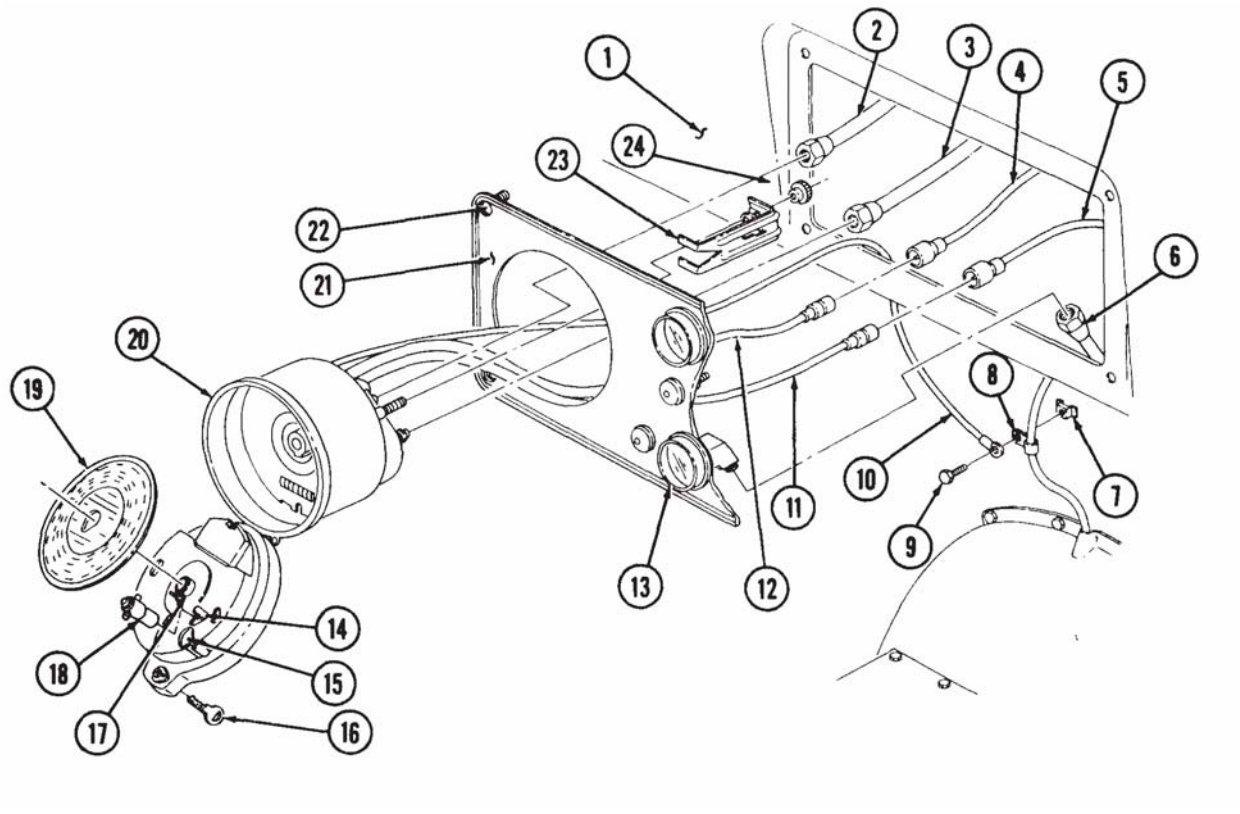

14-49. TACHOGRAPH KIT MAINTENANCE (Contd)

g. Tachograph Adjustment

NOTE

Remove tachograph chart prior to adjustment.

1. Stop and go adjustment.
   a. If base line records high, turn adjusting screw (30) left.
   b. If base line records low, turn adjusting screw (30) right.
   c. Close tachograph (20).
   d. Start engine (TM 9-2320-260-10), let engine idle for five minutes, then drive for five minutes.
   e. Recheck tachograph chart stop and go field. Adjust if needed.
2. Engine rpm/warning indicator light (25) adjustment.
   a. If engine rpm/warning indicator light (25) fails to light at 2300 rpm, adjust tachograph (20).
   b. If engine rpm/warning indicator light (25) comes on below 2300 rpm, turn adjusting screw (27) right.
   c. If engine rpm/warning indicator light (25) comes on above 2300 rpm, turn adjusting screw (27)
   d. Close tachograph (20).
   e. Road test truck (TM 9-2320-260-10) and bring engine speed to 2300 rpm for a short time. If warning indicator light (25) fails to light at 2300 rpm, readjust.
3. Clock (26) adjustment.
   a. To set clock (26), turn chart support (28) to proper time.
   b. Turn lateral wheel (29) for final clock (26) setting.
   c. Close tachograph (20).

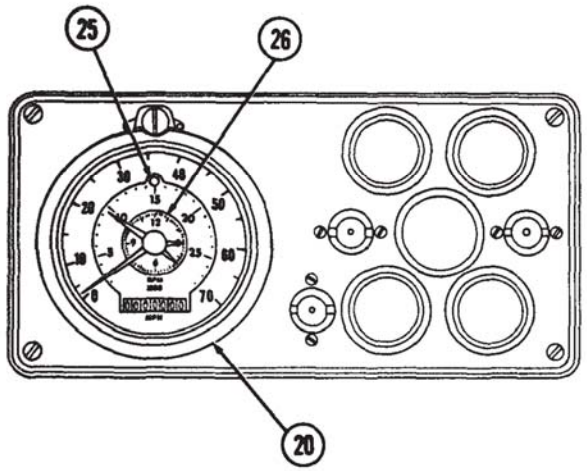

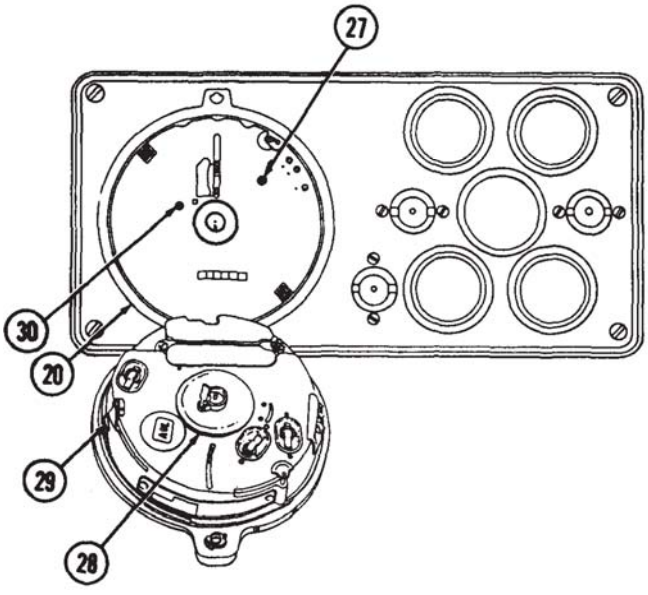

Section X. CONVOY WARNING LIGHT KIT MAINTENANCE

14-50. CONVOY WARNING LIGHT KIT MAINTENANCE INDEX

PARA. NO.	TITLE	PAGE NO.
14-51.	Convoy Warning Light Mount Replacement	14-96
14-52.	Convoy Warning Light Mount (M820, M820A1, M820A2) Replacement	14-100
14-53.	Convoy Warning Light Mount (M817) Replacement	14-102
14-54.	Convoy Warning Light Harness Replacement	14-104
14-55.	Convoy Warning Light Harness (M817) Replacement	14-106
14-56.	Convoy Warning Light Harness (M820, M820A1, M820A2) Replacement	14-108
14-57.	Convoy Warning Light Resistor and Leads Replacement	14-110
14-58.	Convoy Warning Light Replacement	14-112
14-59.	Convoy Warning Light Switch Replacement	14-114

14-51. CONVOY WARNING LIGHT MOUNT REPLACEMENT

THIS TASK COVERS:

a. Removal **b. Installation**

INITIAL SETUP

APPLICABLE MODELS
All (except M817, M820, M820A1, M820A2)

MATERIALS/PARTS
Nine locknuts
Screw-assembled lockwasher

REFERENCES (TM)
TM 9-2320-260-10
TM 9-2320-260-20P

EQUIPMENT CONDITION
- Parking brake set (TM 9-2320-260-10).
- Convoy warning light removed (para. 14-58).

NOTE

The left and right convoy warning light mounts are replaced the same way. This procedure covers the left light mount only.

a. Removal

1. Disconnect two leads (13) from connectors (14).
2. Remove screw-assembled lockwasher (12), washer (11), clamp (10), and cable (22) from gun mount bracket (9). Discard screw-assembled lockwasher (12).
3. Remove cable (22) from mounting plate (1) and support tube (2).
4. Remove wing screw (20), pin (21), and support tube (2) from bracket tube (16) and bracket (19).
5. Remove two locknuts (18), washers (17), U-bolt (6), locknut (5), washer (4), screw (3), and bracket (19) from bracket tube (16). Discard locknuts (5) and (18).

14-51. CONVOY WARNING LIGHT MOUNT REPLACEMENT (Contd)

NOTE

Perform steps 6 and 7 for vehicles equipped with machine gun mount kit.

6. Remove two locknuts (18), washers (17), U-bolt (6), locknut (5), washer (4), screw (3), and bracket (19) from bracket post (23). Discard locknuts (5) and (18).
7. Remove four locknuts (7), washers (8), two U-bolts (15), and bracket tube (16) from gun mount bracket (9). Discard locknuts (7).
8. Remove mounting plate (1) from support tube (2).

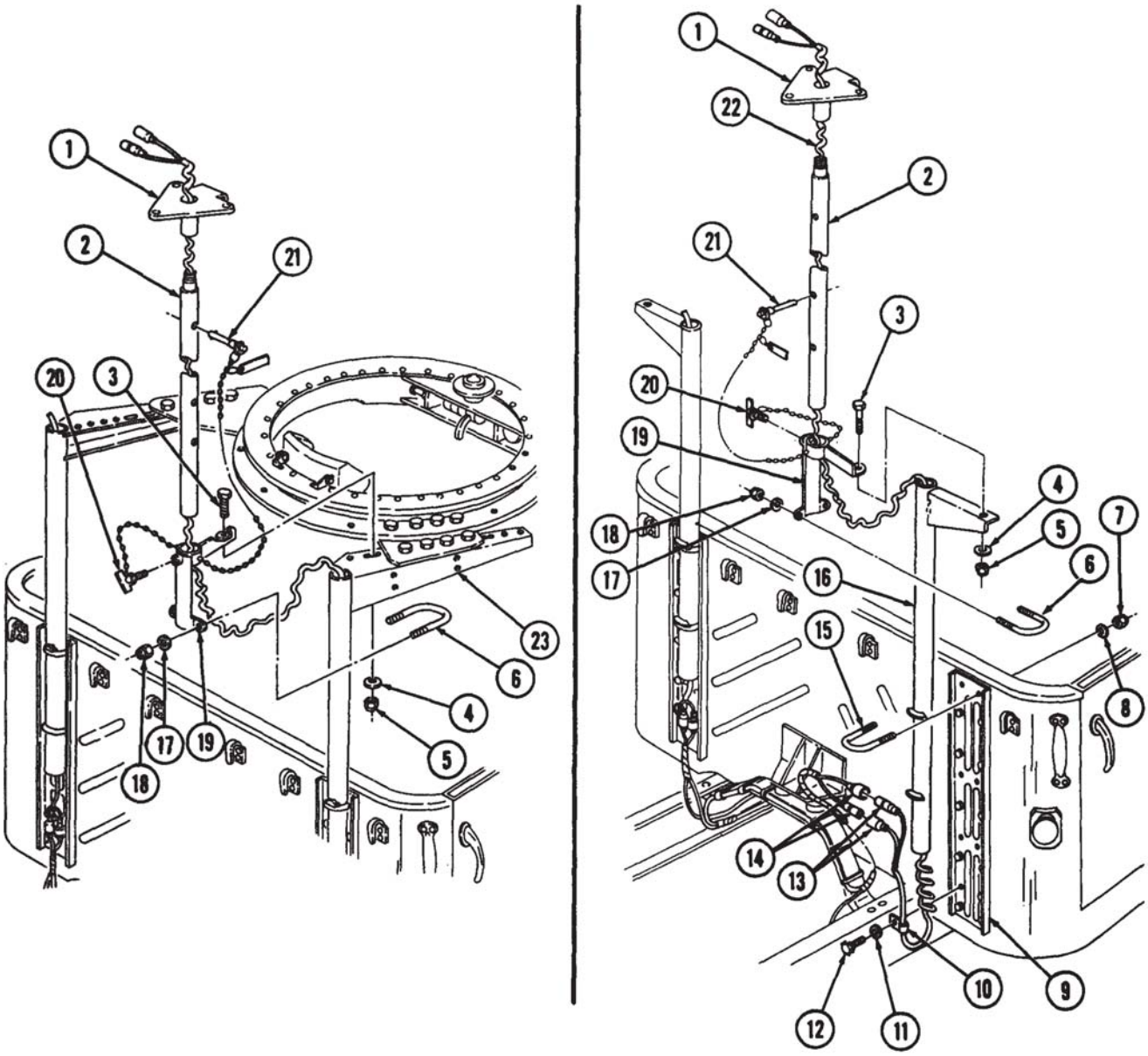

14-51. CONVOY WARNING LIGHT MOUNT REPLACEMENT (Contd)

b. Installation

1. Install mounting plate (1) on support tube (2).

NOTE

Perform steps 2 and 3 for vehicles equipped with machine gun mount kit.

2. Install bracket (19) on bracket post (23) with U-bolt (6), two washers (17), new locknuts (18), screw (3), washer (4), and new locknut (5).
3. Install bracket tube (16) on gun mount bracket (9) with two U-bolts (15), four washers (8), and new locknuts (7).
4. Install bracket (19) on bracket tube (16) with screw (3), washer (4), new locknut (5), U-bolt (6), two washers (17), and new locknuts (18).
5. Insert cable (22) through hole in mounting plate (1) and support tube (2).
6. Insert cable (22) and support tube (2) through bracket tube (16) and install with pin (21) and wing screw (20).
7. Install cable (22) on gun mount bracket (9) with clamp (10), washer (11), and new screw-assembled lockwasher (12).
8. Connect two leads (13) to connectors (14).

14-51. CONVOY WARNING LIGHT MOUNT REPLACEMENT (Contd)

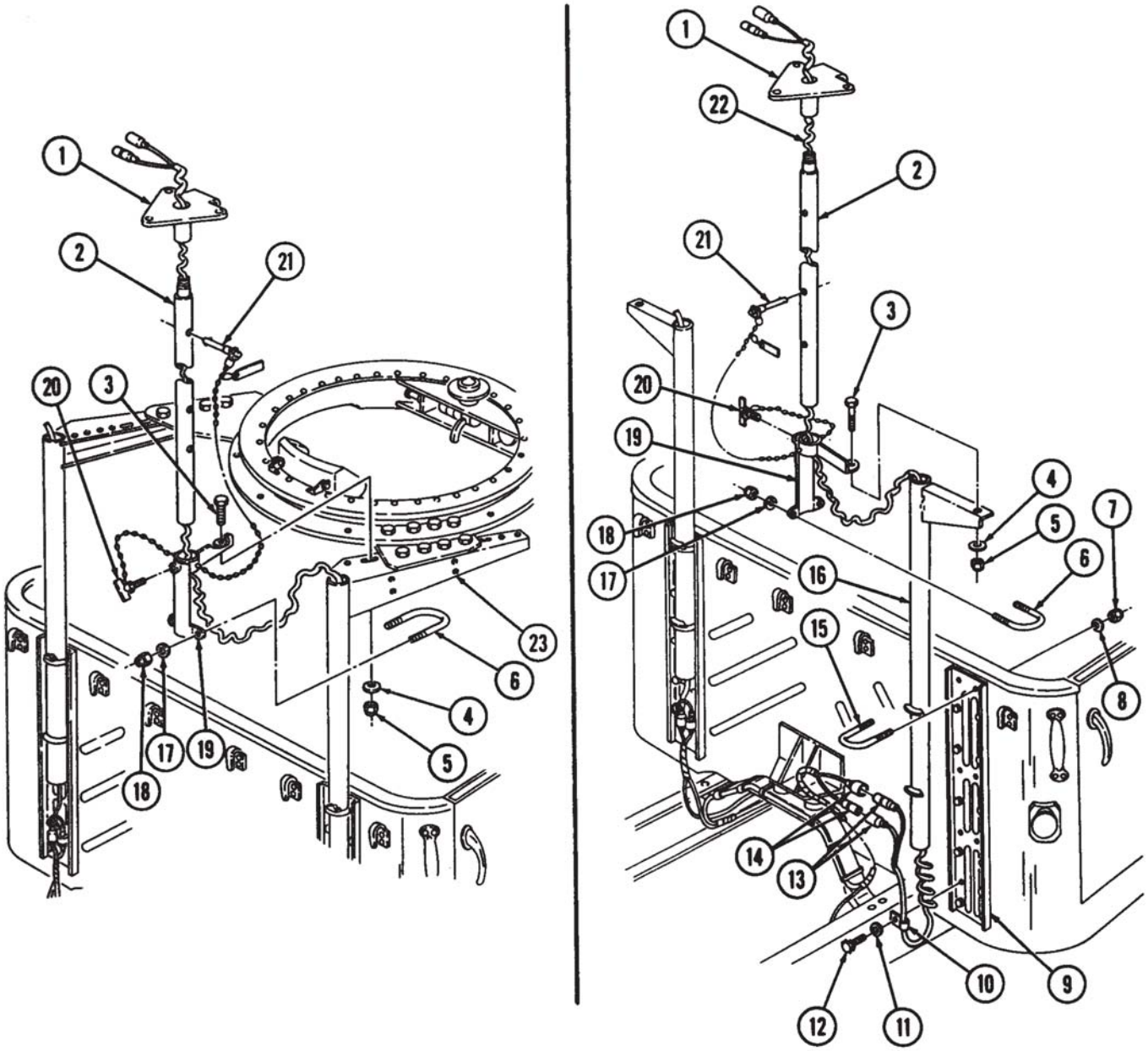

FOLLOW-ON TASK: Install convoy warning light (para. 14-58).

14-52. CONVOY WARNING LIGHT MOUNT (M820, M820A1 , M820A2) REPLACEMENT

THIS TASK COVERS:

a. Removal **b. Installation**

INITIAL SETUP

APPLICABLE MODELS
M820, M820A1, M820A2

MATERIALS/PARTS
Eight lockwashers
Two tiedown straps (Appendix C, Item 33)

REFERENCES (TM)
TM 9-2320-260-10
TM 9-2320-260-20P

EQUIPMENT CONDITION
- Parking brake set (TM 9-2320-260-10).
- Convoy warning light removed (para. 14-58).

a. Removal

1. Remove tiedown strap (3) and harness (4) from support tube (10). Discard tiedown strap (3).
2. Remove wing screw (5) and support tube (10) from mounting bracket (9).
3. Remove mounting plate (2) from support tube (10).
4. Remove three screws (6), lockwashers (7), lifting bracket (8), and mounting bracket (9) from van body (1). Discard lockwashers (7).
5. Remove tiedown strap (14) and harness (4) from support tube (12). Discard tiedown strap (14).
6. Loosen wing screw (15) and remove support tube (12) from mounting bracket (21).
7. Remove mounting plate (13) from support tube (12).
8. Remove two screws (17) and lockwashers (18) and open heater access door (19). Discard lockwashers (18).
9. Remove three nuts (11), lockwashers (23), screws (16), lifting bracket (22), mounting bracket (21), and six washers (20) from van body (1). Discard lockwashers (23).

b. Installation

1. Install six washers (20), mounting bracket (21), and lifting bracket (22) on van body (1) with three screws (16), new lockwashers (23), and nuts (11).
2. Close heater access door (19) and secure with two new lockwashers (18) and screws (17).
3. Install mounting plate (13) and support tube (12).
4. Install support tube (12) on mounting bracket (21) with wing screw (15).
5. Install harness (4) on support tube (12) with new tiedown strap (14).
6. Install mounting bracket (9) and lifting bracket (8) on van body (1) with three new lockwashers (7) and screws (6).
7. Install mounting plate (2) on support tube (10).
8. Install support tube (10) on mounting bracket (9) with wing screw (5).
9. Install harness (4) on support tube (10) with new tiedown strap (3).

14-52. CONVOY WARNING LIGHT MOUNT (M820, M820A1 , M820A2) REPLACEMENT (Contd)

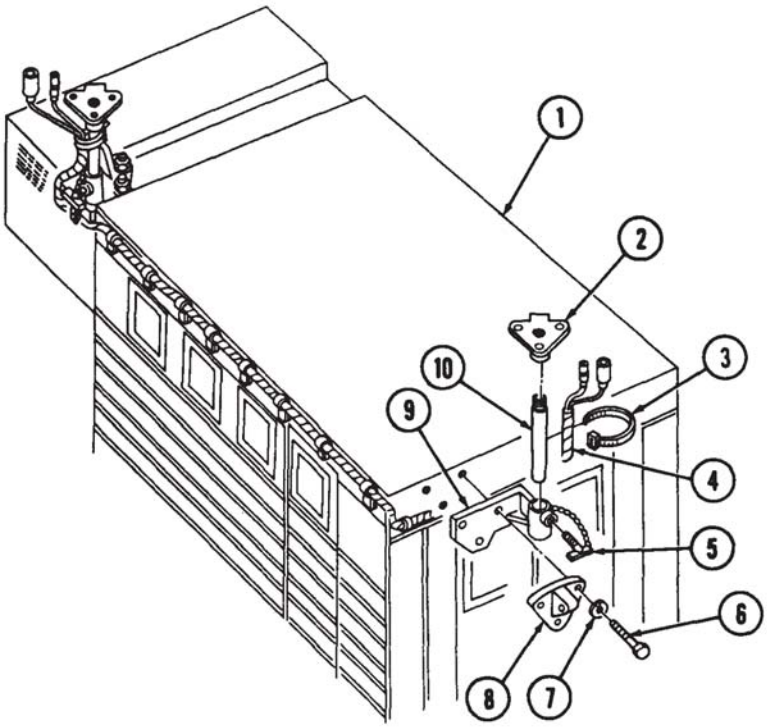

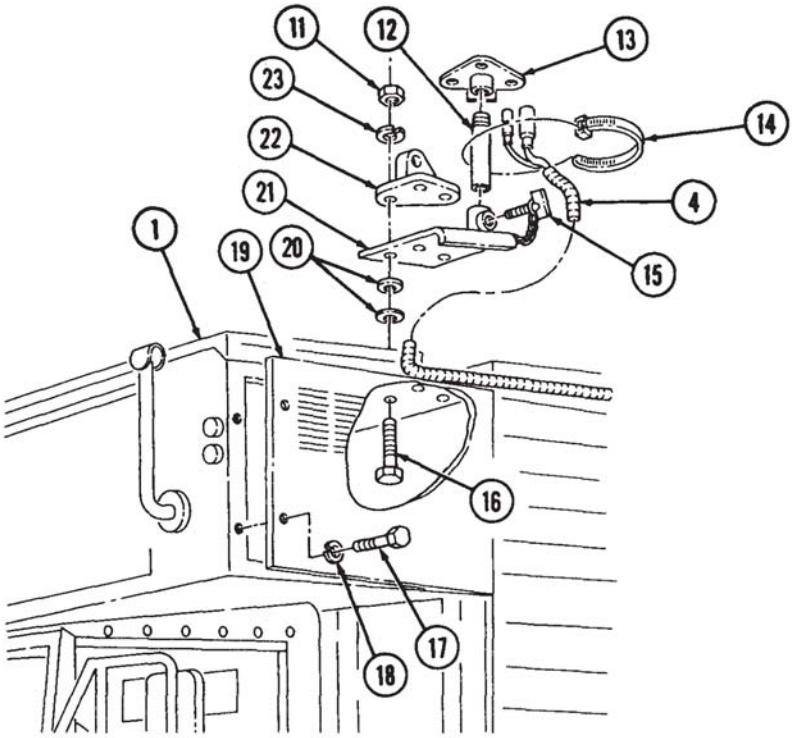

FOLLOW-ON TASK: Install convoy warning light (para. 14-58).

14-53. CONVOY WARNING LIGHT MOUNT (M817) REPLACEMENT

THIS TASK COVERS:

a. Removal **b. Installation**

INITIAL SETUP

APPLICABLE MODELS
M817

MATERIALS/PARTS
Four locknuts

REFERENCES (TM)
TM 9-2320-260-10
TM 9-2320-260-20P

EQUIPMENT CONDITION
- Parking brake set (TM 9-2320-260-10).
- Convoy warning light removed (para. 14-58).

a. Removal

1. Disconnect cable (8) from harness (7).
2. Pull cable (8) from mounting bracket (11), support tube (2), and mounting plate (1).
3. Loosen wing screw (3) and remove support tube (2) from mounting bracket (11).
4. Remove mounting plate (1) from support tube (2).
5. Remove four locknuts (5), screws (10), washers (4) and (9), and mounting bracket (11) from cab protector (6). Discard locknuts (5).

b. Installation

1. Install mounting bracket (11) on cab protector (6) with four washers (4) and (9), screws (10), and new locknuts (5).
2. Install mounting plate (1) on support tube (2).
3. Insert cable (8) through mounting plate (1), support tube (2), and mounting bracket (11).
4. Install support tube (2) on mounting bracket (11) with wing screw (3).
5. Connect cable (8) to harness (7).

14-53. CONVOY WARNING LIGHT MOUNT (M817) REPLACEMENT (Contd)

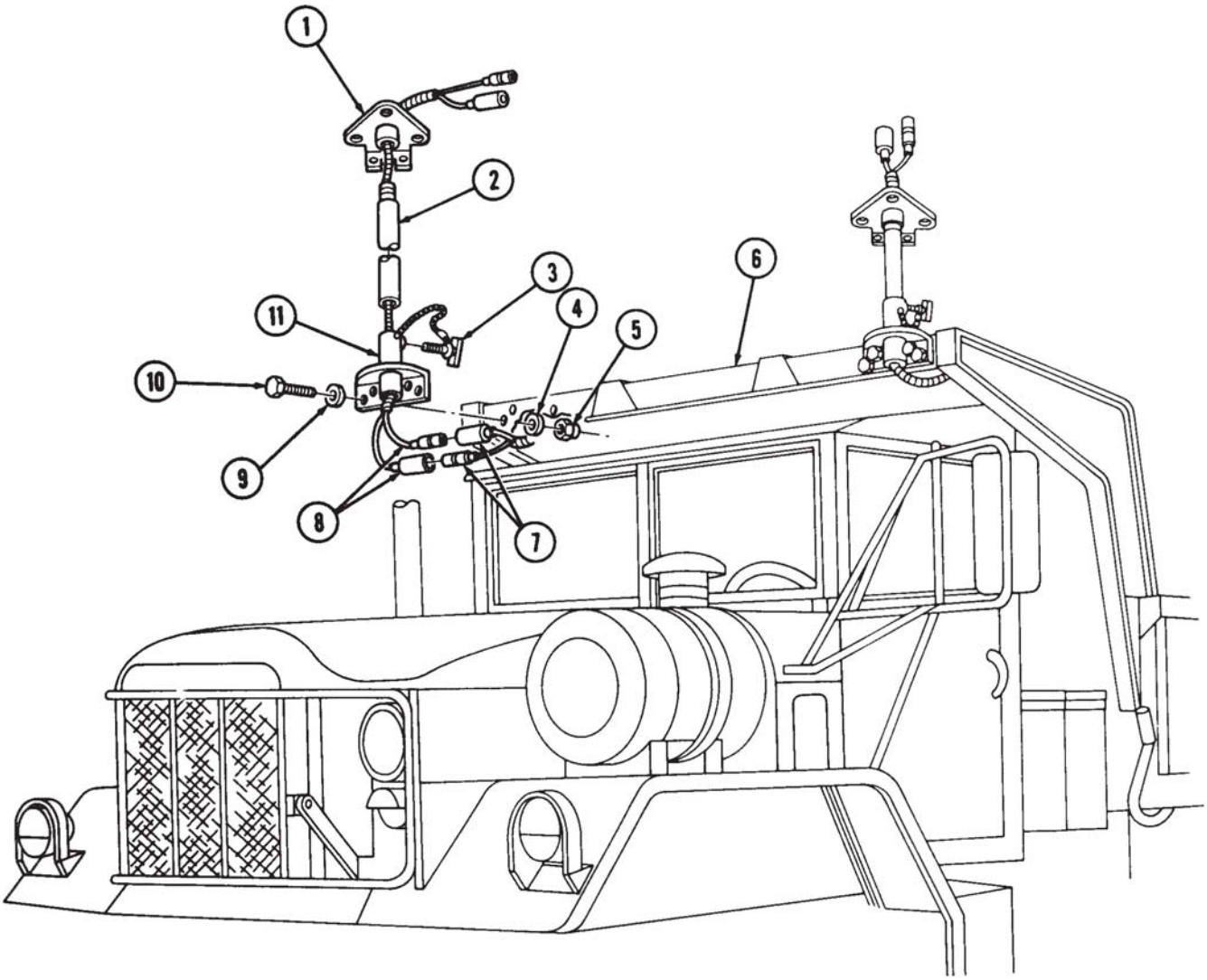

FOLLOW-ON TASK: Install convoy warning light (para. 14-58).

14-54. CONVOY WARNING LIGHT HARNESS REPLACEMENT

THIS TASK COVERS:

a. Removal **b. Installation**

INITIAL SETUP

APPLICABLE MODELS

All (except M817, M820A1, M820A2)

MATERIALS/PARTS

Locknut
Lockwasher
Twenty-one tiedown straps
(Appendix C, Item 33)

REFERENCES (TM)

TM 9-2320-260-10
TM 9-2320-260-20P

EQUIPMENT CONDITION

- Parking brake set (TM 9-2320-260-10).
- Hood raised and secured (TM 9-2320-260-10).
- Toolbox removed; M818 (para. 12-72). M813, M813A1, M814 (para. 12-9).
- Battery ground cable disconnected (para. 4-48).

a. Removal

NOTE

- Tag all wires for installation.
- Perform steps 1 and 2 for left and right rear of cab.

1. Disconnect wires (6) from harness (7).
2. Remove locknut (5), lockwasher (2), two ground leads (4), washer (3), and screw (10) from frame (11) and rear step hanger (9). Discard locknut (5) and lockwasher (2).
3. Remove six tiedown straps (1) and harness (7) from cab cross member (8). Discard tiedown straps (1).
4. Remove fifteen tiedown straps (12) and harness (17) from front main wiring harness (18). Discard tiedown straps (12).
5. Remove screw (16), clip (15), and lead (14) from relay (13).

b. Installation

1. Install lead (14) on relay (13) with clip (15) and screw (16).
2. Route harness (17) under cab (19), along front main wiring harness (18) and cab crossmember (8).

NOTE

Perform steps 3 and 4 for left and right rear of cab.

3. Connect wires (6) to harness (7).
4. Install two ground leads (4) on frame (11) and rear step hanger (9) with screw (10), new lockwasher (2), washer (3), and new locknut (5).
5. Install harness (7) on cab crossmember (8) with six new tiedown straps (1).
6. Install harness (17) on front main wiring harness (18) with fifteen new tiedown straps (12).

14-54. CONVOY WARNING LIGHT HARNESS REPLACEMENT (Contd)

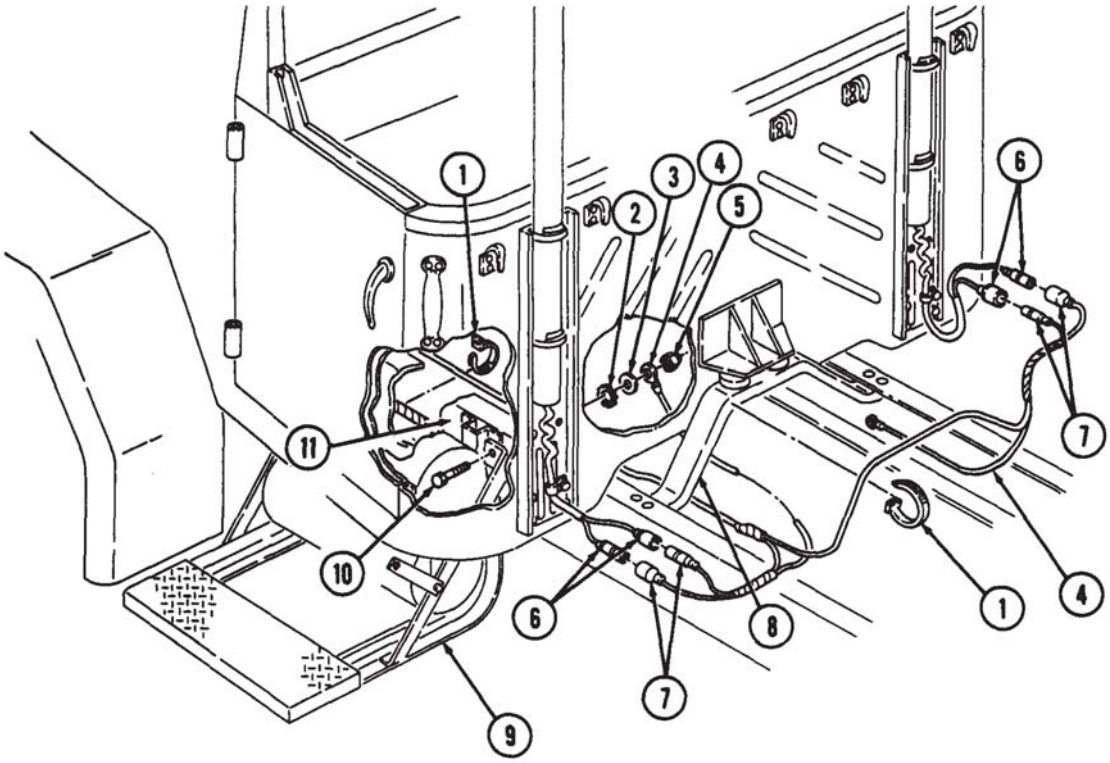

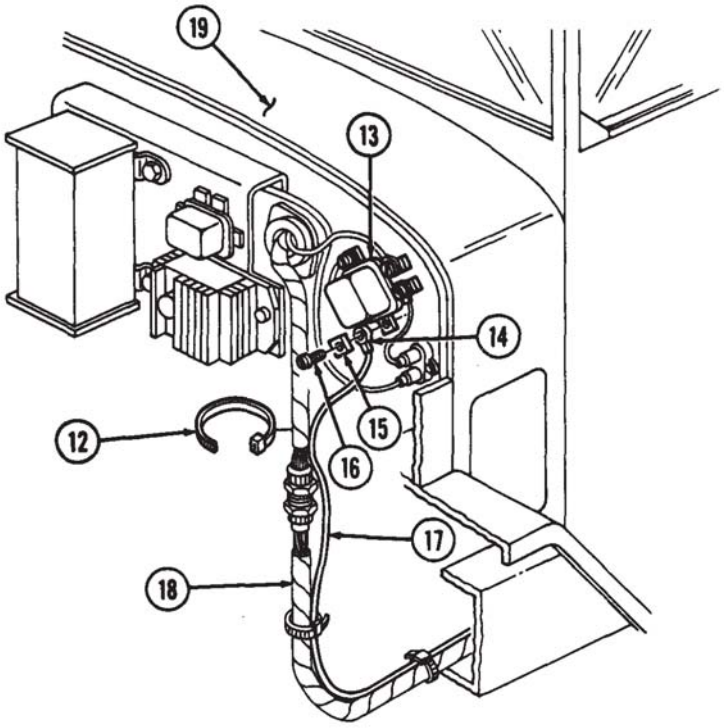

FOLLOW-ON TASKS: • Connect battery ground cable (para. 4-48).
• Install toolbox; M818 (para. 12-72), M813, M813A1, M814 (para. 12-9).

14-55. CONVOY WARNING LIGHT HARNESS (M817) REPLACEMENT

THIS TASK COVERS:

a. Removal **b. Installation**

INITIAL SETUP

APPLICABLE MODELS
M817

MATERIALS/PARTS
Thirty locknuts
Lockwasher
Two tiedown straps (Appendix C, Item 33)

REFERENCES (TM)
TM 9-2320-260-10
TM 9-2320-260-20P

EQUIPMENT CONDITION
Parking brake set (TM 9-2320-260-10).

NOTE

Tag all wires for installation.

a. Removal

1. Disconnect two leads (7) from two leads (8) on two convoy warning lights (6).
2. Remove eighteen locknuts (5), screws (2), clamps (3), and harness (9) from upper cab protector (4). Discard locknuts (5).
3. Remove ten locknuts (12), screws (10), clamps (11), and harness (9) from dump body (1) and left front of cab protector (4). Discard locknuts (12).
4. Disconnect lead (22) from cable (20).
5. Remove locknut (23), washer (24), ground lead (28), lockwasher (25), screw (27), and washer (26) from crossmember (21). Discard lockwasher (25) and locknut (23).
6. Remove locknut (16), screw (30), clamp (14), and harness (9) from crossmember (17). Discard locknut (16).
7. Remove screw (13), clamp (15), and harness (9) from frame (18).
8. Remove two tiedown straps (19) from harness (9). Discard tiedown straps (19).
9. Remove harness (9) from front of cab protector (4) and dump body (1).
10. Remove conduit (29) from harness (9).

b. Installation

1. Install conduit (29) on harness (9).
2. Connect two leads (8) to two leads (7) on two convoy warning lights (6).
3. Route harness (9) along inside of upper cab protector (4) and install with eighteen clamps (3), screws (2), and new locknuts (5).
4. Route harness (9) along left front of cab protector (4) and insert through dump body (1).
5. Install harness (9) on cab protector (4) with ten clamps (11), screws (10), and new locknuts (12).
6. Route harness (9) to rear of dump body (1) through corrugation of floor (31).
7. Connect lead (22) to cable (20).
8. Install ground lead (28) on crossmember (21) with washer (26), screw (27), new lockwasher (25), washer (26), and new locknut (23).
9. Pull harness (9) tight and install on frame (18) with clamp (15) and screw (13).
10. Install harness (9) on crossmember (17) with clamp (14), screw (30), and new locknut (16).
11. Take up harness (9) slack by looping and securing with two new tiedown straps (19).

14-55. CONVOY WARNING LIGHT HARNESS (M817) REPLACEMENT (Contd)

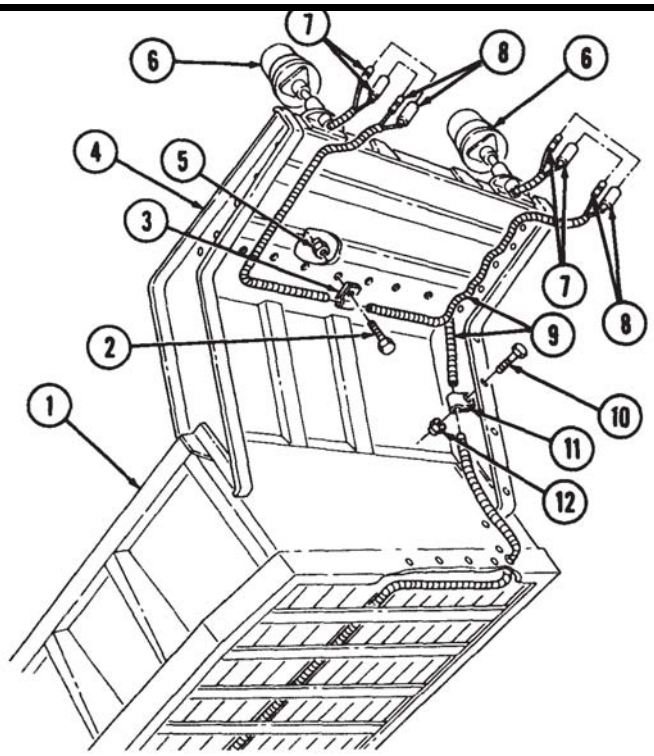

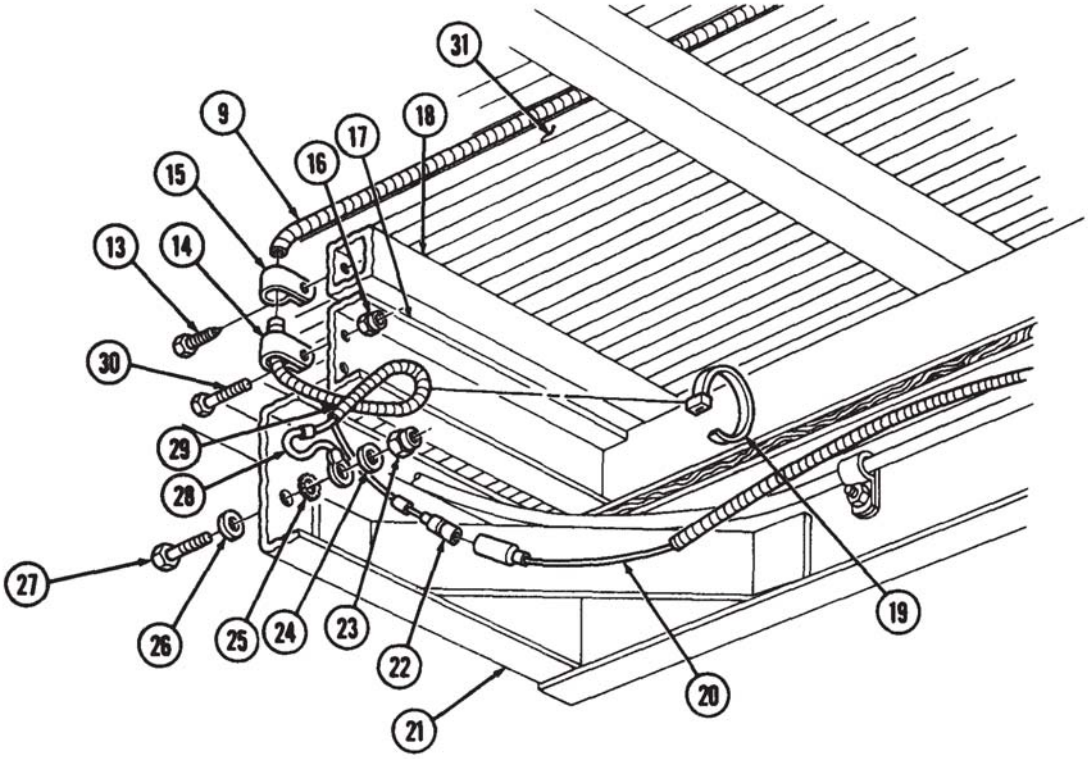

14-56. CONVOY WARNING LIGHT HARNESS (M820, M820A1, M820A2) REPLACEMENT

THIS TASK COVERS:

a. Removal **b. Installation**

INITIAL SETUP

APPLICABLE MODELS
M820, M820A1, M820A2

MATERIALS/PARTS
Seven screw-assembled lockwashers
Locknut
Two tiedown straps (Appendix C, Item 33)

REFERENCES (TM)
TM 9-2320-260-10
TM 9-2320-260-20P

EQUIPMENT CONDITION
- Parking brake set (TM 9-2320-260-10).
- Convoy warning light removed (para. 14-58).

a. Removal

1. Remove two tiedown straps (3) and harness (4) from support tubes (2) and van body (1). Discard tiedown straps (3).
2. Remove twenty-five screw-assembled washers (5), clamps (6), and harness (4) from van body (1).
3. Remove four screw-assembled lockwashers (19), washers (20), clamps (21), and harness (4) from van body (1). Discard screw-assembled lockwashers (19).
4. Remove five screw-assembled washers (18), clamps (17), and harness (4) from van body (1).
5. Remove three screw-assembled lockwashers (14), washers (15), clamps (16), and harness (4) from van body (1). Discard screw-assembled lockwashers (14).
6. Disconnect lead (13) from wire (12).
7. Remove locknut (11), screw (7), two washers (9), and ground lead (8) from fuel tank support (10). Discard locknut (11).

b. Installation

1. Connect lead (13) of harness (4) to wire (12).
2. Install ground lead (8) of harness (4) to fuel tank support (10) with two washers (9), screw (7), and new locknut (11).
3. Route harness (4) to front of van body (1).
4. Install harness (4) on van body (1) with three clamps (16), washers (15), and new screw-assembled lockwashers (14).
5. Install harness (4) on van body (1) with five clamps (17) and screw-assembled washers (18).
6. Route harness (4) to top of van body (1).
7. Install harness (4) on van body (1) with four clamps (21), washers (20), and new screw-assembled lockwashers (19).
8. Route harness (4) to rear of van body (1).
9. Install harness (4) on van body (1) with twenty-five clamps (6) and screw-assembled washers (5).
10. Install harness (4) on support tubes (2) with two new tiedown straps (3).

14-56. CONVOY WARNING LIGHT HARNESS (M820, M820A1, M820A2) REPLACEMENT (Contd)

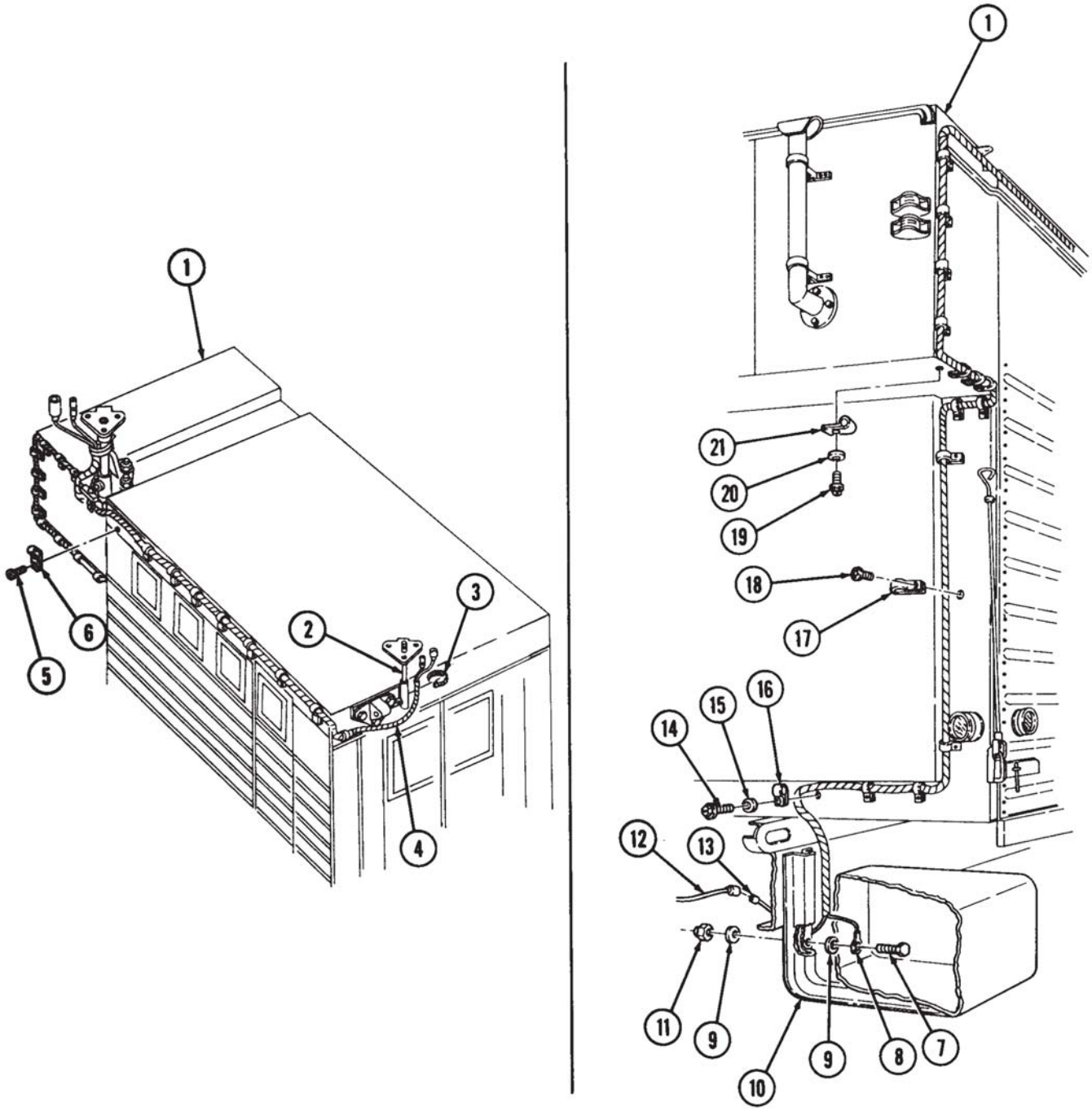

FOLLOW-ON TASK: Install convoy warning light (para. 14-58).

14-57. CONVOY WARNING LIGHT RESISTOR AND LEADS REPLACEMENT

THIS TASK COVERS:

a. Removal **b. Installation**

INITIAL SETUP

APPLICABLE MODELS
All

MATERIALS/PARTS
Two locknuts
Three lockwashers
Tiedown strap (Appendix C, Item 33)

REFERENCES (TM)
TM 9-2320-260-10
TM 9-2320-260-20P

EQUIPMENT CONDITION
- Parking brake set (TM 9-2320-260-10).
- Hood raised and secured (TM 9-2320-260-10).
- Battery ground cable disconnected (para. 4-48).

a. Removal

NOTE

Tag all leads for installation.

1. Disconnect leads (1) and (2) from warning light switch (3).
2. Remove tiedown strap (27) and leads (17) and (20) from front main wiring harness (21). Discard tiedown strap (27).

NOTE

Assistant will help with step 3.

3. Remove two locknuts (4), screws (30), retainer (29), grommet (7), and two leads (1) and (2) horn firewall (10). Discard locknuts (4).
4. Remove four screws (5), clips (6), and leads (2), (9), (16), and (28) from resistor (8).
5. Remove two screws (15), lockwashers (14), lead (28), and resistor (8) from firewall (10). Discard lockwashers (14).
6. Disconnect lead (17) from headlight high beam selector switch (18).
7. Disconnect leads (11) and (13) from circuit breaker (12).
8. Remove nut (24), lockwasher (23), and wires (25) and (26) from starter solenoid (22). Discard lockwasher (23).
9. Disconnect lead (19) from connector (20).

b. Installation

1. Connect lead (19) to connector (20).
2. Install two wires (25) and (26) on starter solenoid (22) with new lockwasher (23) and nut (24).
3. Connect leads (11) and (13) to circuit breaker (12).
4. Connect lead (17) to headlight high beam selector switch (18).
5. Install resistor (8) and lead (28) on firewall (10) with two new lockwashers (14) and screws (15).
6. Install leads (2), (9), (16), and (28) on resistor (8) with four clips (6) and screws (5).
7. Insert leads (1) and (2) through hole in firewall (10).
8. Connect leads (1) and (2) to warning light switch (3).
9. Install leads (17) and (20) to front main wiring harness (21) with new tiedown strap (27).

14-57. CONVOY WARNING LIGHT RESISTOR AND LEADS REPLACEMENT (Contd)

NOTE

Assistant will help with step 10.

10. Place grommet (7) and retainer (29) around front main wiring harness (21) and leads (1) and (2) and install grommet (7) and retainer (29) on firewall (10) with two screws (30) and new locknuts (4).

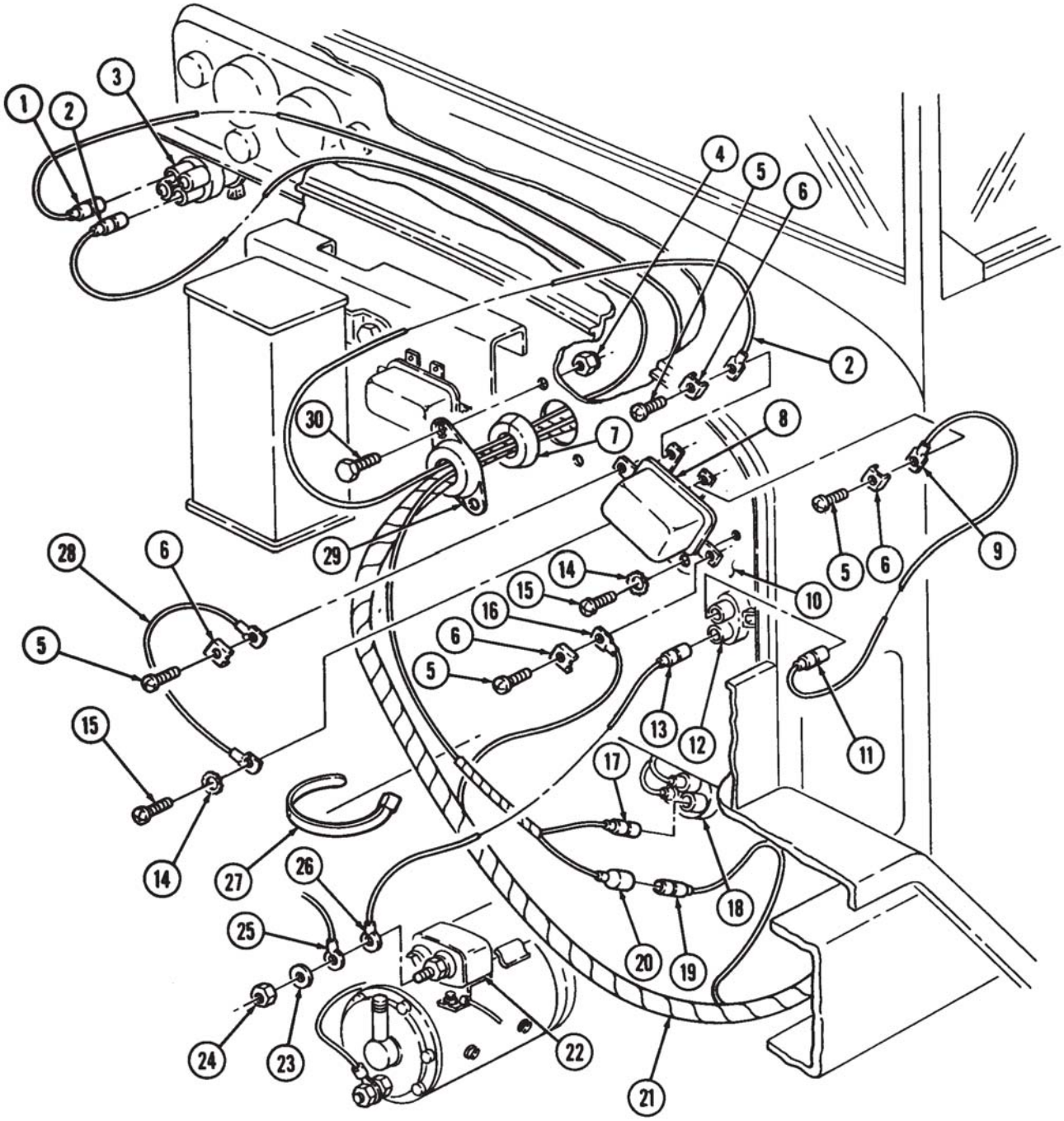

FOLLOW-ON TASK: Connect battery ground cable (para. 4-48).

14-58. CONVOY WARNING LIGHT REPLACEMENT

THIS TASK COVERS:

a. Removal **b. Installation**

INITIAL SETUP

APPLICABLE MODELS
All

MATERIALS/PARTS
Three lockwashers

REFERENCES (TM)
TM 9-2320-260-10
TM 9-2320-260-20P

EQUIPMENT CONDITION
- Parking brake set (TM 9-2320-260-10).
- Battery ground cable disconnected (para. 4-48).

a. Removal

1. Disconnect leads (14) from cable leads (13).
2. Loosen three screws (5), rotate clamps (6) 1/2-turn counterclockwise, and remove dome (1) from base (7).
3. Remove three nuts (2), lockwashers (3), and washers (4) from toggle bolts (12) and separate base (7) from support plate (10). Discard lockwashers (3).
4. Remove nut (18), washer (17), clamp (16), and leads (14) from toggle bolt (12).
5. Remove leads (14), base (7), and seal (8) from support plate (10).
6. Remove three oval nuts (9), toggle bolts (12), and support plate (10) from mounting plate (11).

b. Installation

1. Install support plate (10) on mounting plate (11) with three toggle bolts (12) and oval nuts (9).
2. Position seal (8) on support plate (10).
3. Insert leads (14) through hole (15) in support plate (10) and install leads (14) on plate (10) with clamp (16), washer (17), nut (18), and toggle bolt (12).
4. Install base (7) on support plate (10) with three washers (4), new lockwashers (3), nuts (2), and toggle bolts (12).
5. Install dome (1) on base (7), rotate three clamps (6) 1/2-turn clockwise, and tighten three screws (5).
6. Connect leads (14) to cable leads (13).

14-58. CONVOY WARNING LIGHT REPLACEMENT (Contd)

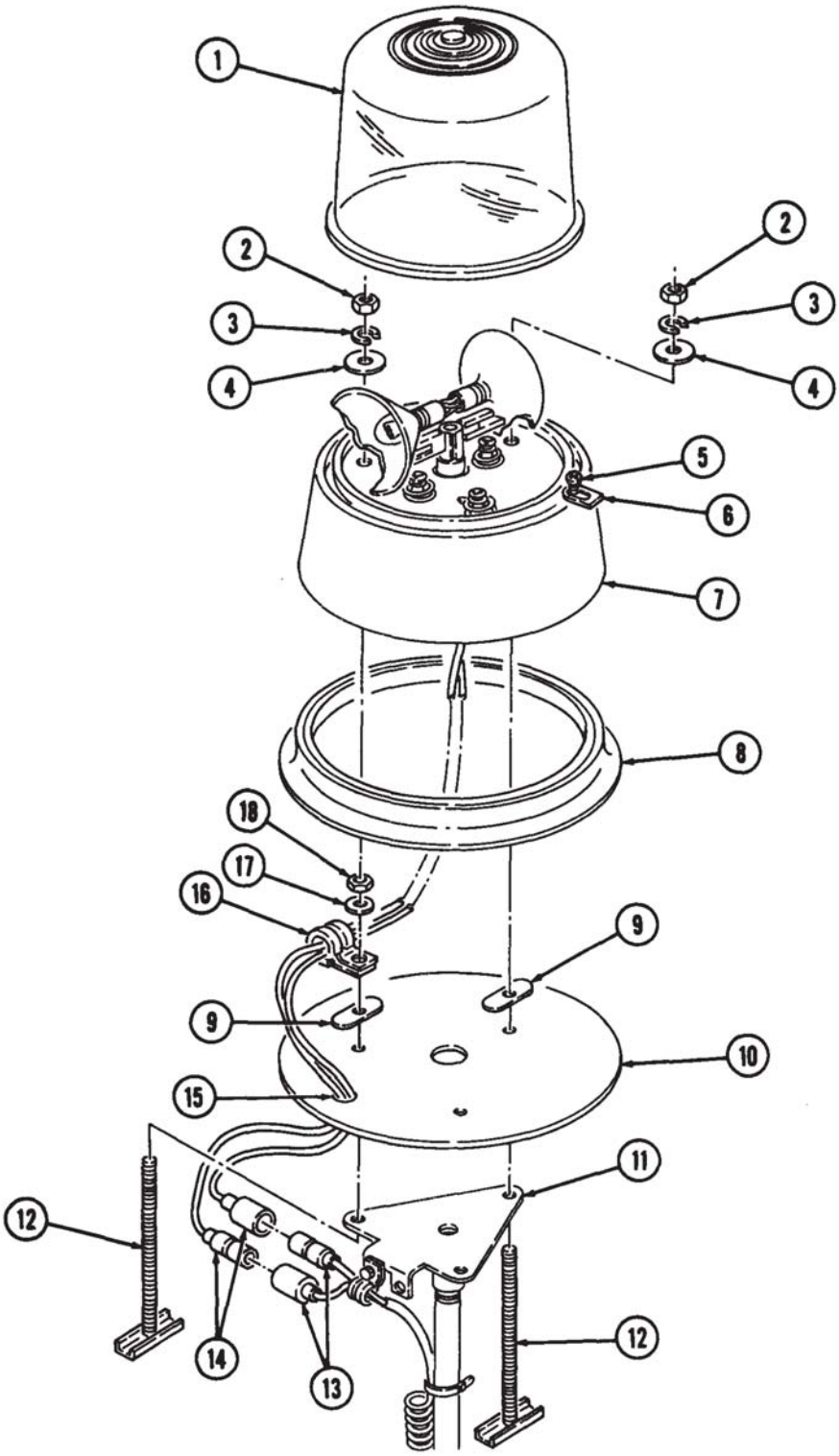

FOLLOW-ON TASK: Connect battery ground cable (para. 4-48).

14-59. CONVOY WARNING LIGHT SWITCH REPLACEMENT

THIS TASK COVERS:

a. Removal **b. Installation**

INITIAL SETUP

APPLICABLE MODELS
All

MATERIALS/PARTS
Two locknuts
Two lockwashers

REFERENCES (TM)
TM 9-2320-260-10
TM 9-2320-260-20P

EQUIPMENT CONDITION
- Parking brake set (TM 9-2320-260-10).
- Battery ground cable disconnected (para. 4-48).

a. Removal

1. Remove screw (8), lockwasher (7), and lever (6) from switch (11). Discard lockwasher (7).
2. Remove nut (5), lockwasher (4), identification plate (3), and switch (11) from bracket (9). Discard lockwasher (4).
3. Disconnect leads (12) from switch (11).
4. Remove two locknuts (2), screws (10), and bracket (9) from instrument panel (1). Discard locknuts (10).

b. Installation

1. Install bracket (9) on instrument panel (1) with two screws (10) and new locknuts (2).
2. Connect leads (12) to switch (11).
3. Position switch (11) and identification plate (3) on bracket (9) and install with new lockwasher (4) and nut (5).
4. Install lever (6) on switch (11) with new lockwasher (7) and screw (8).

14-59. CONVOY WARNING LIGHT SWITCH REPLACEMENT (Contd)

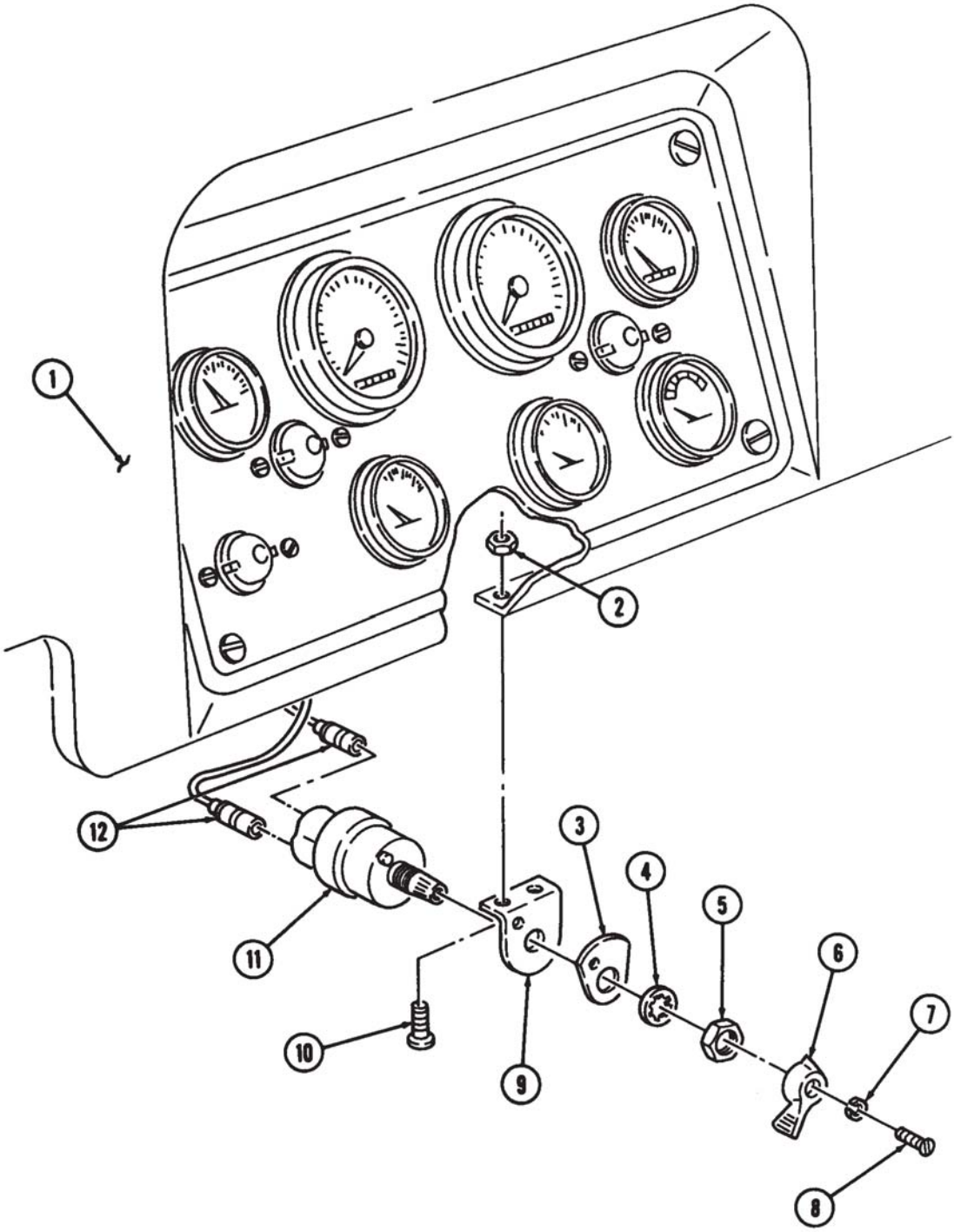

FOLLOW-ON TASK: Connect battery ground cable (para. 4-48).

Section XI. VAN CABLE REEL KIT MAINTENANCE

14-60. VAN CABLE REEL KIT MAINTENANCE INDEX

PARA. NO.	TITLE	PAGE NO.
14-61.	Van Cable Reel Maintenance	14-116
14-62.	Van Cable Reel Main Support Replacement	14-118

14-61. VAN CABLE REEL MAINTENANCE

THIS TASK COVERS:

a. Removal
b. Disassembly
c. Assembly
d. Installation

INITIAL SETUP

APPLICABLE MODELS
M820, M820A1, M820A2

MATERIALS/PARTS
Four lockwashers
Three cotter pins

REFERENCES (TM)
TM 9-2320-260-10
TM 9-2320-260-20P

EQUIPMENT CONDITION
- Parking brake set (TM 9-2320-260-10).
- Cable reel cover removed (TM 9-2320-260-10).
- Electrical cable removed (TM 9-2320-260-10).

NOTE

Left and right cable reels are maintained the same way. This procedure covers the left cable reel.

a. Removal

1. Remove cotter pin (5) from housing (3).
2. Remove four nuts (8), lockwashers (7), screws (2), and cable reel (1) from support (6). Discard lockwashers (7).
3. Remove screw (9), chain (4), and cotter pin (5) from support (6). Discard cotter pin (5).

b. Disassembly

1. Remove two cotter pins (10), four bushings (11), three spacers (12), two spacers (13), and housings (3) from shaft (14). Discard cotter pins (10).
2. Remove shaft (14) from cable reel (1).

c. Assembly

1. Insert shaft (14) in cable reel (1).
2. Install two housings (3), spacers (13), three spacers (12), and four bushings (11) on shaft (14) with two new cotter pins (10).

d. Installation

1. Install cable reel (1) on support (6) with four screws (2), new lockwashers (7), and nuts (8).
2. Install new cotter pin (5) and chain (4) on support (6) with screw (9).
3. Aline hole of shaft (14) with hole of housing (3) and install cotter pin (5).

14-61. VAN CABLE REEL MAINTENANCE (Contd)

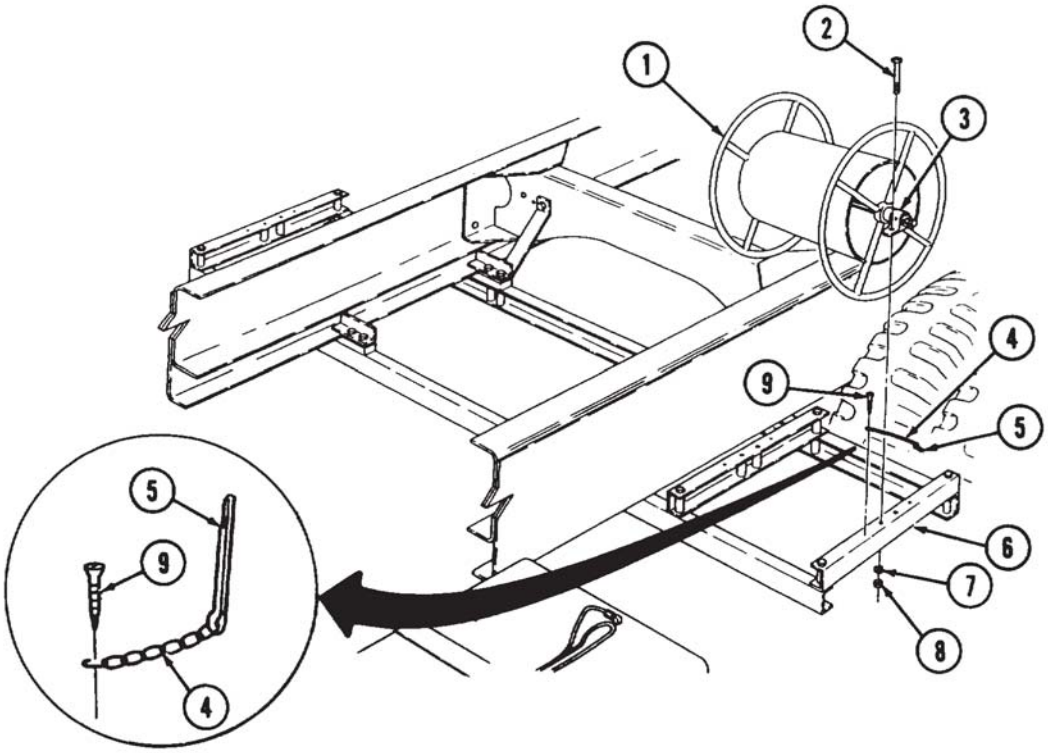

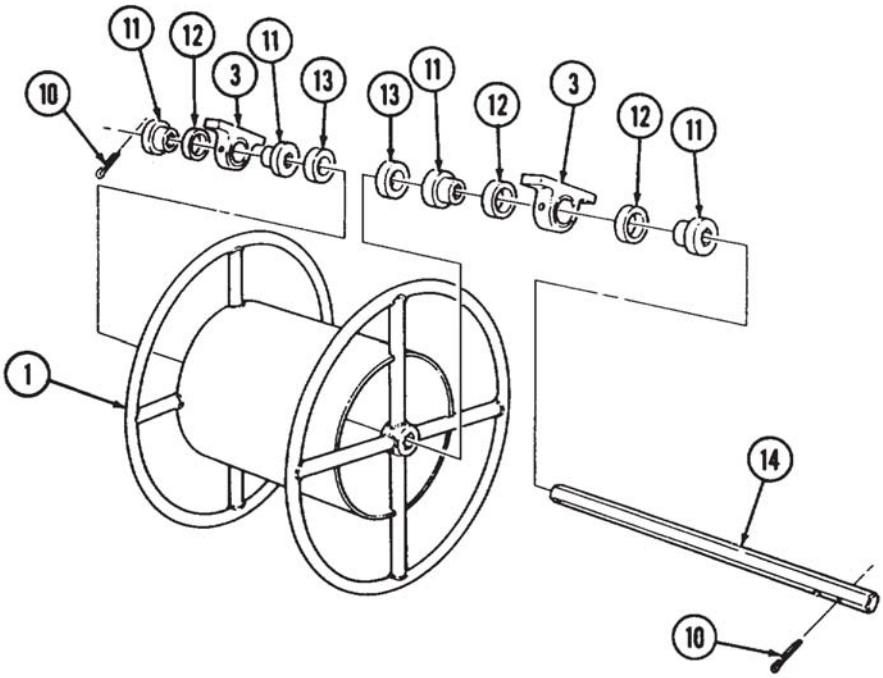

FOLLOW-ON TASKS: • Install electrical cable (TM 9-2320-260-10).
• Install reel cable cover (TM 9-2320-260-10).

14-62. VAN CABLE REEL MAIN SUPPORT REPLACEMENT

THIS TASK COVERS:

a. Removal **b. Installation**

INITIAL SETUP

APPLICABLE MODELS
M820, M820A1, M820A2

MATERIALS/PARTS
Twenty-four locknuts

PERSONNEL REQUIRED
Two

REFERENCES (TM)
TM 9-2320-260-10
TM 9-2320-260-20P

EQUIPMENT CONDITION
- Parking brake set (TM 9-2320-260-10).
- Van cable reel removed (para. 14-61).

a. Removal

1. Remove two locknuts (3), washers (4), screws (5), and splash shield (1) from each side of support (2). Discard locknuts (3).
2. Remove four locknuts (11), washers (10), screws (9), and two brackets (8) from crossmember (12) and support (2). Discard locknuts (11).
3. Remove four locknuts (14), washers (15), and screws (7) from clamps (6) and support (2). Discard locknuts (14).
4. Loosen four screws (16), rotate clamps (6), and remove support (2) from two frame rails (17).
5. Remove four spacers (13) from under clamps (6).
6. Remove four locknuts (24), washers (23), screws (20), clamps (6), and spacers (21) and (22) from support rails (19). Discard locknuts (24).
7. Remove eight locknuts (25), washers (26), screws (18), and four supporta (27) from support rails (19). Discard locknuts (25).

b. Installation

1. Install fours supports (27) on support rails (19) with eight screws (18), washers (26), and new locknuts (25).
2. Install four spacers (20), spacers (19), and clamps (6) on support (2) with four screws (18), washers (21), and new locknuts (22). Finger tighten locknuts (22).
3. Position support (2) on two frame rails (17) and rotate clamps (6) to hold support (2) in place.
4. Install four spacers (13) under clamps (6).
5. Install four screws (7), washers (15), and new locknuts (14) on clamps (6) and support (2).
6. Tighten locknuts (22).
7. Install two brackets (8) on support (2) and crossmember (12) with four screws (9), washers (10), and new locknuts (11).
8. Install splash shield (1) on each side of support (2) with two screws (5), washers (4), and locknuts (3).

14-62. VAN CABLE REEL MAIN SUPPORT REPLACEMENT (Contd)

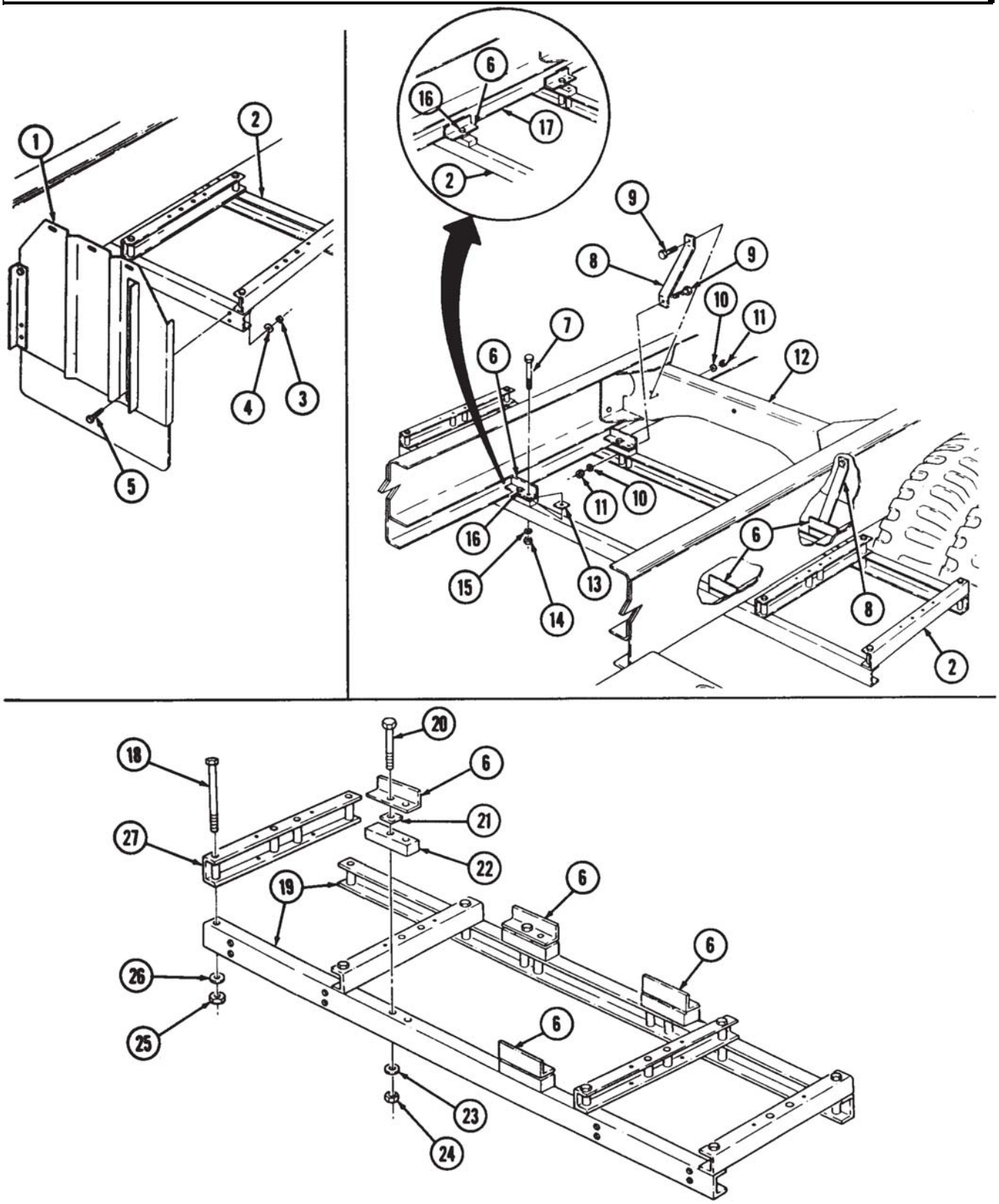

FOLLOW-ON TASK: Install van cable reel (para. 14-61).

CHAPTER 15
SHIPMENT AND LIMITED STORAGE

Section I. General Preparation of Truck for Shipment (page 15-1)
Section II. Loading and Movement (page 15-2)
Section III. Limited Storage (page 15-2)

Section I. GENERAL PREPARATION OF TRUCK FOR SHIPMENT

15-1. SCOPE

a. This section provides instructions on preserving and protecting M809 series trucks in preparation for shipment.

b. Protection for trucks and accompanying equipment must be sufficient to protect the material against deterioration and physical damage.

15-2. CLEANING

WARNING

Cleaning solvents are flammable and will not be used near open flame. Use only in well-ventilated places. Failure to do so may result in injury to personnel.

CAUTION

Cleaning materials or paints containing chlorinated hydrocarbon class solvents are not to be used on composite taillights and parking lights. Damage to taillight and parking light lenses may result.

Prior to application of preservatives, surfaces must be cleaned to ensure removal of corrosion, soil, grease, acid, and alkali residues.

a. Interior of Truck. Remove dirt and other foreign matter from painted metal surfaces of the truck by scrubbing with cloth soaked in drycleaning solvent (appendix C, item 29). DO NOT apply solvent to electrical equipment or rubber parts; use trichloroethylene (appendix C, item 32) to clean electrical parts and electrical contact points. Use warm water for cleaning rubber parts. Apply preservative compound to rubber parts as required.

b. Exterior of Truck. Clean exterior surfaces of truck to ensure removal of dirt and foreign matter. After cleaning, immediately dry parts to remove excess cleaning solutions and residual moisture. Allow parts to air dry or wipe with clean, dry, lint-free cloth (appendix C, item 12).

15-3. LUBRICATION

WARNING

Drycleaning solvent is flammable and will not be used near open flame. Use only in well-ventilated places. Failure to do so may result in injury to personnel.

After cleaning has been accomplished, wipe grease fittings clean with drycleaning solvent (appendix C, item 29) and lubricate truck in accordance with LO 9-2320-260-12. Remove excess grease after lubrication and before processing.

15-4. PRESERVATION

All critical unpainted metal surfaces must be protected during shipment. Use procedures and materials listed in a. and b. below. If the preservatives listed below are not available, oil or grease found in LO 9-2320-260-12 maybe used for this purpose, but are effective for only a few days; therefore, protected equipment must be closely watched for signs of corrosion. When selecting preservatives, use only those that will not damage the surface to which they are applied.

a. Battery Leads. Disconnect both batteries (para. 4-48). Each battery lead terminal, including the jumper lead ends, must be wrapped with tape (appendix C, item 31).

b. Miscellaneous Preservation. Coat unpainted, exposed, or machined metal surfaces on the exterior of the truck with corrosion-preventive compound (appendix C, item 14).

15-5. PACKAGING

Electrical Openings. Cover electrical receptacles with tape (appendix C, item 31) or with plastic caps offering the same degree of protection.

15-6. PACKING

Pack Basic Issue Items (BII) and Additional Authorization List (AAL) items to prevent mechanical damage.

15-7. SHIPMENT OF ARMY DOCUMENTS

Prepare all army shipping documents accompanying truck in accordance with DA Pam 738-750.

Section II. LOADING AND MOVEMENT

15-8. LOADING AND MOVEMENT

For transportability guidance handling and movement of the M809 series trucks, refer to TM 55-2320-260-15-1.

Section III. LIMITED STORAGE

15-9. SCOPE

Commanders are responsible for ensuring that trucks issued or assigned to their command are maintained in a serviceable condition and properly cared for, and that personnel under their command comply with technical instructions. Lack of time, lack of trained personnel, or lack of proper tools may result in a unit being incapable of performing maintenance for which it is responsible. In such cases, unit commanders may, with the approval of major commanders, place a truck that is beyond the maintenance capability of the unit in administrative storage. For detailed information, refer to AR 750-1.

15-10. LIMITED STORAGE INSTRUCTIONS

a. Time Limitations. Administrative storage is restricted to a period of 90 days and must not be extended unless the truck is reprocessed in accordance with b. below.

b. Storage Procedure. Perform disassembly only as required to clean and preserve exposed surfaces. Except as otherwise noted, and to the maximum extent consistent with safe storage, place the truck in administrative storage in as nearly an assembled condition as practicable. Install and adjust equipment so that the truck maybe placed in service and operated with minimum delay.

(1) The truck should be stored on level ground in the most favorable location available, preferably one which affords protection from exposure to the elements and from pilferage.

(2) Perform semiannual preventive maintenance checks and services (PMCS) on trucks intended for administrative storage. This maintenance consists of inspecting, cleaning, servicing, preserving, lubricating, adjusting, and replacing minor repair parts as required.

(3) Remove both batteries and place in covered storage, maintaining a charged condition.

(4) Provide access to the truck to permit inspection, servicing, and subsequent removal from storage.

15-11. INSPECTION IN LIMITED STORAGE

a. Conduct visual inspection of vehicles in limited storage at least once a month and immediately following hard rains, heavy snowstorms, windstorms, or other severe weather conditions. Perform disassembly as required to fully ascertain the extent of discovered deterioration or damage. Maintain a record of these inspections for each vehicle. Attach record to vehicle so it is protected from the weather.

b. Perform necessary reprocessing for limited storage when rust or deterioration is found on unpainted area. Immediately repair damage caused to vehicle by severe weather conditions. Repair damage to on-equipment material (OEM) as necessary. Thoroughly clean, dry, and repaint painted surfaces showing evidence of wear.

15-12. REMOVAL FROM LIMITED STORAGE

Material removed from administrative storage will be:

(1) Restored to normal operating conditions.

(2) Repaired as required.

(3) Returned to normal PMCS schedule using last type service completed as a starting point.

(4) Calibrate equipment as required (TB 43-180).

APPENDIX A
REFERENCES

A-1. SCOPE

This appendix lists all forms, field manuals, and technical manuals for use with this vehicle.

A-2. PUBLICATIONS INDEX

The following index should be consulted frequently for latest changes or revisions and for new publications relating to materiel covered in this manual.

Consolidated Index of Army Publications and Blank Forms . . . . . DA PAM 25-30

A-3. FORMS

Accident Identification Card . . . . . DD Form 518
Equipment Control Record . . . . . DA Form 2408-9
Equipment Inspection and Maintenance Worksheet . . . . . DA Form 2404
Equipment Log Assembly (Records) . . . . . DA Form 2408
Equipment Maintenance Log (Consolidated) . . . . . DA Form 2409
Equipment Operators Qualification Record (Except Aircraft) . . . . . DA Form 348
Exchange Tag . . . . . DA Form 2402
Material Condition Status Report (MCSR) . . . . . DA Form 2406
Maintenance Request . . . . . DA Form 2407
Maintenance Request - Continuation Sheet . . . . . DA Form 2407-1
Maintenance Request Register . . . . . DA Form 2405
Operator Report on Motor Vehicle Accidents . . . . . SF 91
Organizational Control Record for Equipment . . . . . DA Form 2401
Preventive Maintenance Schedule and Record . . . . . DA Form 314
Processing and Reprocessing Record for Shipment,
Storage and Issue of Vehicles and Spare Engines . . . . . DD Form 1397
Product Quality Deficiency Report (NSN 7540-00-105-0078) . . . . . SF 368
Recommended Changes to Publications and Blank Forms . . . . . DA Form 2028
Recommended Changes to Equipment Technical Publications . . . . . DA Form 2028-2

A-4. SUPPLY CATALOGS

The following Department of the Army Supply Catalogs pertain to this manual:

Shop Equipment, Automotive Maintenance and Repair:
Organizational Maintenance, Common No. 2, Less Power
NSN 4910-00-754-0650) (LIN W32730) and Map Only (4910-00-919-0082) . . . . . SC 4910-95-CL-A72
Shop Equipment, Automotive Maintenance and Repair:
Organizational Maintenance, Common No. 1, Less Power
(NSN 4910-00-754-0654) (LIN W32593) and Map Only (4910-00-919-0098) . . . . . SC 4910-95-CL-A74
Tool Set, Vehicle Full Tracked: Organizational Maintenance,
Supplemental No. 2, Less Power (NSN 4940-00-754-0743)
(LIN W6S7A7) and Map Only (4940-00-919-0106) . . . . . SC 4940-95-CL-A08

A-5. FIELD MANUALS

Army Motor Transport Units and Operations . . . . . FM 55-30
Basic Cold Weather Manual . . . . . FM 31-70
First Aid for Soldiers . . . . . FM 21-11
Manual for the Wheeled Vehicle Driver . . . . . FM 21-305

APPENDIX A (Contd)

A-5. FIELD MANUALS (Contd)

Metal Body Repair and Related Operations ..... FM 43-2
Military Symbols ..... FM 21-30
Northern Operations ..... FM 31-71
Nuclear, Biological and Chemical (NBC) Decontamination ..... FM 3-5
Nuclear, Biological and Chemical (NBC) Protection Operations ..... FM 3-4
Operation and Maintenance of Ordnance Materiel in
Cold Weather (0° to 65°F) ..... FM 9-207

A-6. TECHNICAL MANUALS

Administrative Storage of Equipment ..... TM 740-90-1
Camouflage Materials ..... TM 5-200
Cooling Systems: Tactical Vehicles ..... TM 750-254
Deepwater Fording ofOrdnance Materiel ..... TM 9-238
Inspection, Care and Maintenance ofAntifriction Bearings ..... TM 9-214
Maintenance, Direct and General Support Level Generator Assembly
(Prestolite Model AMA-5102 VT) (Leece-Neville Models 3002AC, 3002AD
and 3002AE) (NSN 2920-00-909-2483), (Models 5504AA, 5504AB)
(2920-00-475-1446), (Model 2184AC) (2920-00-782-1955) and
(Model 5300GP) (2920-00-818-8635) ..... TM 9-2920-225-34
Marking, Packaging and Shipment of Supplies and Equipment:
General Packaging Instructions for Field Units ..... TM 746-10
Materials Used for Cleaning, Preserving, Abrading and Cementing
Ordnance Materiel and Related Materials Including Chemicals ..... TM 9-247
Operation, Installation and Reference Data Operator Level for
5-Ton, 6x6, M809 Series Trucks (Diesel) ..... TM 9-2320-260-10
Operator's and Organizational Maintenance Manual:
Alarm, Chemical Agent, Automatic ..... TM 3-6665 -225-12
Operator's and Organizational Maintenance Manual
(Including Repair Parts and Special Tools List) for
Decontaminating Appartus, Portable, DS2, 1-1/2 Quart, ABC-M11 ..... TM 3-4230-204-12&P
Operator's Manual for Welding Theory and Application ..... TM 9-237
Operator's, Organizational, Direct Support, and General Support
Maintenance Manual for Lead-Acid Storage Batteries: 4HN, 24V
(NSN 6140-00-059-3548) MS75047-1; 2HN, 12V (6140-00-057-2553)
MS35000-1; 6TN, 12V (6140-00-057-2554) MS35000-3 ..... TM 9-6140-200-14
Operator's, Organizational, Direct Support, and General Support
Maintenance Including Repair Parts and Special Tools List
(Including Depot Maintenance Repair Parts and Special Tools):
Various Machine Gun Mounts and Combinations Used on Tactical
and Armored Vehicles ..... TM 9-1005-245-14
Organizational Care, Maintenance and Repair of Pneumatic Tires,
Inner Tubes and Radial Tires ..... TM 9-2610-00-24
Organizational Maintenance Repair Parts and Special Tools List:
Truck, 5-Ton, M809 Series ..... TM 9-2320-260-20P
Packaging of Materiel: Preservation ..... TM 38-230
Painting Instructions for Field Use ..... TM 43-0139
Principles of Automotive Vehicles ..... TM 9-8000
Procedures for Destruction of Tank-Automotive Equipment to
Prevent Enemy Use (US. Army Tank-Automotive Command) ..... TM 750-244-6
Railcar Loading Procedures ..... TM 55-601
Standards for Criteria for Technical Inspection and Classification of Tires ..... TM 9-2610-201-14
Use and Care of Handtools and Measuring Tools ..... TM 9-243

APPENDIX A (Contd)

A-7. TECHNICAL BULLETINS

Calibration and Repair Requirements for the Maintenance of Army Materiel ..... TB 43-180
Color, Marking, and Camouflage Painting of Military Vehicles, Construction Equipment, and Material Handling Equipment ..... TB 43-0209
Depot Reconditioning of Engine, Transmission and Similar Reusable Metal Containers ..... TB 9-289
Functional Grouping Codes: Combat, Tactical, and Support Vehicles and Special Purpose Equipment ..... TB 750-93-1
Load-Testing Vehicles Used to Handle Missiles and Rockets ..... TB 9-352
Mandatory Brake Hose Inspection and Replacement ..... TB 9-2300-405-14
Nonaeronautical Equipment Army Oil Analysis Program ..... TB 43-0210
Quarterly Equipment Improvement Report and Maintenance Digest: Tank and Automotive Equipment ..... TB 43-0001-39
Safety Inspection and Testing of Lifting Devices ..... TB 43-0142
Security of Tactical Wheeled Vehicles ..... TB 9-2300-422-20
Standards for Overseas Shipment or Domestic Issue of Special Purpose Vehicles, Combat Tactical, Construction, and Selected Industrial and Troop Support U.S. Army Tank-Automotive Materiel Readiness Command Managed Items ..... TB 9-2300-281-35
Tactical Wheeled Vehicles: Repair of Frames ..... TB 9-2300-247-40
Truck, 5-Ton, 6x6, M939 Series, Warranty Procedures for Cummins Engine, Model NHC-250 (NSN 2815-01-111-2262) and Allison Transmission, Model MT654CR (2815-01-117-3010) ..... TB 9-2300-295-15/21
Use of Antifreeze Solutions and Cleaning Compounds in Engine Cooling Systems ..... TB 750-651

A-8. OTHER PUBLICATIONS

Index of Army Equipment Modification Work Orders ..... DA PAM 310-10
Lubrication Order, Truck, Chassis: 5-Ton, 6x6, M809 Series ..... LO 9-2320-260-12
Methods of Preservation MIL-P-116
Official Nomenclature, Names and Designations MIL-HDBK-63038-2
Personnel Heater and Winterization Kit Policy for Tank-Automotive Construction and Materiel Handling Equipment ..... SB 9-16
Preparation for Shipment and Storage of Basic Issue Items MIL-B-12841
Preservation, Packaging, Packing and Marking of Materials, Supplies and Equipment Used by the Army ..... SB 38-100
Shipment and Limited Storage MIL-V-62038
Softwood Lumber MM-L-751
The Army Maintenance Management System (TAMMS) ..... DA PAM 738-750

A-9. ARMY REGULATIONS

Accident Reporting and Records ..... AR 385-40
Catalog of Abbreviations and Brevity Codes ..... AR 310-50
Dictionary of United States Army Terms ..... AR 310-25
Identification and Distribution of DA Publications and Issue of Agency and Command Administrative Publications ..... AR 310-2
Packaging of Materiel ..... AR 700-15
Prevention of Motor Vehicle Accidents ..... AR 385-55

APPENDIX B
MAINTENANCE ALLOCATION CHART

Section I. INTRODUCTION

B-1. GENERAL

a. This section provides a general explanation of all maintenance and repair functions authorized at various maintenance categories.

b. The Maintenance Allocation Chart (MAC) in section II designates overall authority and responsibility for the performance of maintenance functions on the identified end item or component. The application of the maintenance functions to the end item or component will be consistent with the capacities and capabilities of the designated maintenance categories.

c. Section III lists the tools and test equipment (both special tools and common tool sets) required for each maintenance function as referenced from section II.

d. Section IV contains supplemental instructions and explanatory notes for a particular maintenance function.

B-2. MAINTENANCE FUNCTIONS. Maintenance functions will be limited to and defined as follows:

a. Inspect. To determine the serviceability of an item by comparing its physical, mechanical, and/or electrical characteristics with established standards through examination (e.g., by sight, sound, or feel).

b. Test. To verify serviceability by measuring the mechanical, pneumatic, hydraulic, or electrical characteristics of an item and comparing those characteristics with prescribed standards.

c. Service. Operations required periodically to keep an item in proper operating condition; i.e., to clean (includes decontaminate, when required), to preserve, to drain, to paint, or to replenish fuel, lubricants, chemical fluids, or gases.

d. Adjust. To maintain or regulate, within prescribed limits, by bringing into proper or exact position, or by setting the operating characteristics to specified parameters.

e. Aline. To adjust specified variable elements of an item to bring about optimum or desired performance.

f. Calibrate. To determine and cause corrections to be made or to be adjusted on instruments or test, measuring, and diagnostic equipment used in precision measurement. Consists of comparisons of two instruments, one of which is a certified standard of known accuracy, to detect and adjust any discrepancy in the accuracy of the instrument being compared.

g. Remove/Install. To remove and install the same item when required to perform service or other maintenance functions. Install maybe the act of emplacing, seating, or fixing into position a spare, repair part, or module (component or assembly) in a manner to allow the proper functioning of an equipment or system.

h. Replace. To remove an unserviceable item and install a serviceable counterpart in its place. "Replace" is authorized by the MAC and is shown as the 3d position code of the SMR code.

i. Repair. The application of maintenance services, including fault location/troubleshooting, removal/installation, and disassembly/assembly procedures, and maintenance actions to identify troubles and restore serviceability to an item by correcting specific damage, fault, malfunction, or failure in a part, subassembly, module (component or assembly), end item, or system.

j. Overhaul. That maintenance effort (service/action) prescribed to restore an item to a completely serviceable/operational condition as required by maintenance standards in appropriate technical publications (i.e., DMWR). Overhaul is normally the highest degree of maintenance performed by the Army, Overhaul does not normally return an item to like new condition.

k. Rebuild. Consists of those services/actions necessary for the restoration of unserviceable equipment to a like new condition in accordance with original manufacturing standards. Rebuild is the highest degree of materiel maintenance applied to Army equipment. The rebuild operation includes the act of returning to zero those age measurements (hours/miles, etc.) considered in classifying Army equipment/components.

B-3. EXPLANATION OF COLUMNS IN THE MAC, SECTION II

a. Column (1) - Group Number. Column 1 lists fictional group code numbers, the purpose of which is to identify maintenance significant components, assemblies, subassemblies, and modules with the next higher assembly. End item group number shall be "00."

b. Column (2) - Component/Assembly. Column 2 contains the names of components, assemblies, subassemblies, and modules for which maintenance is authorized.

c. Column (3) - Maintenance Function. Column 3 lists the functions to be performed on the item listed in Column 2. (For detailed explanation of these functions, see paragraph B-2.)

d. Column (4) - Maintenance Category. Column 4 specifies, by the listing of a work time figure in the appropriate subcolumn(s), the category of maintenance authorized to perform the function listed in Column 3. This figure represents the active time required to perform that maintenance function at the indicated category of maintenance. If the number or complexity of the tasks within the listed maintenance function vary at different maintenance categories, appropriate work time figures will be shown for each category. The work time figure represents the average time required to restore an item (assembly, subassembly, component, module, end item, or system) to a serviceable condition under typical field operating conditions. This time includes preparation time (including any necessary disassembly/assembly time), troubleshooting/fault location time, and quality assurance/quality control time in addition to the time required to perform the specific tasks identified for the maintenance functions authorized in the maintenance allocation chart. The symbol designations for the various maintenance categories are as follows:

C . . . . . Operator or Crew
O . . . . . Unit Maintenance
F . . . . . Direct Support Maintenance
H . . . . . General Support Maintenance
D . . . . . Depot Maintenance

e. Column (5) - Tools and Equipment. Column 5 specifies, by code, those common tool sets (not individual tools) and special tools, TMDE, and support equipment required to perform the designated function.

f. Column (6) - Remarks. This column shall, when applicable, contain a letter code, in alphabetic order, which shall be keyed to the remarks contained in Section IV.

B-4. EXPLANATION OF COLUMNS IN TOOL AND TEST EQUIPMENT REQUIREMENTS, SECTION III

a. Column (1) - Reference Code. The tool and test equipment reference code correlates with a code used in the MAC, Section II, column 5.

b. Column (2) - Maintenance Category. The lowest category of maintenance authorized to use the tool or test equipment.

c. Column (3) - Nomenclature. Name or identification of the tool or test equipment.

d. Column (4) - National Stock Number. The National stock number of the tool or test equipment.

e. Column (5) - Tool Number. The manufacturer's part number.

B-5. EXPLANATION OF COLUMNS IN REMARKS, SECTION IV

a. Column (1) - Reference Code. The code recorded in column 6, Section II.

b. Column (2) - Remarks. This column lists information pertinent to the maintenance function being performed as indicated in the MAC, Section II.

Section II. MAINTENANCE ALLOCATION CHART

(1) Group Number	(2) Component/Assembly	(3) Maintenance Function	(4) Maintenance Level: Unit C	Unit O	Direct Support F	General Support H	Depot D	(5) Tools and Equipment	(6) Remarks
01	ENGINE								
0100	Engine Assembly	Inspect	0.1						A
		Test		1.5				1	
		Service		2.0				1	A
		Replace			8.0			7,8	
		Repair				16.7		6 thru 10, 12,13,14	
		Overhaul					40.0		B
	Mount, Engine Lifting	Inspect		0.2					
		Replace			2.0			7,8	
	Bracket, Engine Mounting	Inspect		0.2					
		Replace			2.0			7,8	
0101	Head, Cylinder Assembly	Inspect			0.2				
		Replace			4.0			7,8,10	
		Repair				5.0		6 thru 10, 12,13,14	
	Sleeve, Cylinder	Inspect				0.3			
		Replace				2.0		7,10,12, 13,14	
		Repair				6.0		7,10,12, 13,14	
0102	Crankshaft	Inspect				1.5			
		Replace				3.0		6 thru 10, 12,13,14	
	Damper Vibration	Inspect		0.2					
		Adjust			0.5				
		Replace			1.0			7,8	
	Flange, Crankshaft	Inspect			0.2			7,8	
		Adjust			0.5			7,8	
		Replace			0.4			7,8	
0103	Flywheel, Ring Gear	Inspect			1.0				
		Replace			3.5			7,8	
	Housing, Flywheel Ring Gear	Inspect		0.5					
		Replace			4.0			7,8	
0104	Pistons, Connecting Rods	Inspect				1.0			
		Replace				7.0		7 thru 10, 12,13,14	

Section II. MAINTENANCE ALLOCATION CHART [Contd)

(1) Group Number	(2) Component/Assembly	(3) Maintenance Function	(4) Maintenance Level: Unit C	Unit O	Direct Support F	General Support H	Depot D	(5) Tools and Equipment	(6) Remarks
0105	Spring, Valve	Inspect			0.3				
		Replace			0.5			7,8,10	
	Valves, Intake and Exhaust	Inspect			0.2				
		Replace			1.5			7,8,10	
		Repair			0.5			7,8,10	
	Arm, Valve Rocker Intake/Exhaust	Inspect			0.5				
		Adjust			0.5			7,8,10	
		Replace			1.5			7,8,10	
	Lever, Injector Rocker/ Valve Rocker	Inspect			0.3			7,8,10	
		Adjust			0.5			7,8,10	
		Replace			1.5			7,8,10	
	Rod, Push Intake Exhaust/Injector	Inspect			0.2				
		Replace			0.5			7,8,10	
	Shaft Assembly, Rocker Arm	Inspect			0.3				
		Replace			2.0			7,8,10	
	Bearing, Camshaft	Inspect				0.5			
		Replace				2.0		7,8,10, 12,13,14	
	Camshaft	Inspect				0.2			
		Replace				1.0		7,8,10, 12,13,14	
	Breather, Crankcase	Inspect		0.3					
		Replace		1.0				1 thru 4	
	Timing Gear Cover and Seal	Inspect			0.5				
		Replace			2.5			7,8,10	
0106	Pump, Oil	Replace			2.0			7,8	
		Repair				4.0		7,8,10, 12,13,14	
	Pan, Oil	Inspect	0.1	0.1					A
		Replace			1.0			7,8	
	Tube, Oil Dipstick	Inspect		0.2					
		Replace		0.3				1 thru 4	
	Housing, Oil Filter	Inspect		0.1					
		Replace		1.0				1 thru 4	

Section II. MAINTENANCE ALLOCATION CHART (Contd)

(1) Group Number	(2) Component/Assembly	(3) Maintenance Function	(4) Maintenance Level: Unit C	Unit O	Direct Support F	General Support H	Depot D	(5) Tools and Equipment	(6) Remarks
	Housing, Oil Cooler	Inspect			0.1				
		Replace			1.5			7,8	
		Repair			1.0			7,8,10	
0108	Manifold, Intake and Exhaust	Inspect	0.1		0.5				A
		Replace			3.0			7,8	
0109	Pulley, Accessory Drive	Inspect	0.1		0.1				A
		Replace			2.0			7,8	
02	CLUTCH								
0200	Plate, Pressure	Inspect			0.2				
		Replace			2.0			7,8,10	
	Disk, Clutch	Inspect			0.3				
		Replace			4.5			7,8,10	
0202	Bearing, Clutch Release	Inspect			0.3				
		Replace			3.5			7,8,10	
	Linkage, Clutch Pedal	Inspect	0.1						A
		Adjust		0.5				1 thru 4	
		Replace		1.0				1 thru 4	
03	FUEL SYSTEM								
0301	Fuel Injector	Test				0.5		6,7,10, 12,13,14	
		Adjust				0.5		7,10,12, 13,14	
		Replace			0.5			7,8,10	
		Repair				1.0		7,10,12, 13,14	
		Calibrate				2.0		7,10,12, 13,14	
		Overhaul					1.0		
0302	Pump, Fuel Supply	Inspect			0.5				
		Test				2.0		6,12,13, 14	
		Replace			2.0			7,8,10	
		Repair				2.0		7,10,12, 13,14	
		Calibrate				2.0		7,10,12, 13,14	
		Overhaul					4.0		

Section II. MAINTENANCE ALLOCATION CHART (Contd)

(1) Group Number	(2) Component/Assembly	(3) Maintenance Function	(4) Maintenance Level: Unit C	Unit O	Direct Support F	General Support H	Depot D	(5) Tools and Equipment	(6) Remarks
0304	Cleaner, Air	Inspect	0.2						A
		Replace		0.5				1 thru 4	
	Element, Air Cleaner	Inspect	0.1						A
		Service	0.2						A
		Replace		0.2				1 thru 4	
	Indicator, Air Cleaner	Inspect	0.1	0.1					A
		Test		0.2					
		Replace		0.2				1 thru 4	
	Hoses and Clamps	Inspect	0.1						A
		Replace		0.5				1 thru 4	
0308	Tank, Fuel	Inspect	0.1						A
		Service	0.5	0.5				1 thru 4	A
		Replace		1.0				1 thru 4	
		Repair			1.0			6 thru 9	C
	Hanger and Straps, Fuel Tank Mounting	Inspect	0.1						A
		Replace		1.0				1 thru 4	
	Lines and Fittings, Fuel	Inspect	0.1						A
		Replace		1.5				1 thru 4	D
	Valve, Fuel Selector	Inspect	0.1						A
		Replace		1.0				1 thru 4	
	Lines and Fittings, Fuel Pump to Engine	Inspect	0.1						A
		Replace		1.0				1 thru 4	D
0308	Governor, Fuel Pump (AFC)	Inspect				0.5			
		Test				1.2		7,10,12, 13,14	
		Replace				2.5		7,10,12, 13,14	
	Spring Pack, Fuel Pump	Inspect				0.5			
		Test				1.0		7,10,12, 13,14	
		Replace				2.0		7,10,12, 13,14	
	Governor, Fuel Pump (VS)	Inspect				0.5			
		Test				1.0		7,10,12, 13,14	

Section II. MAINTENANCE ALLOCATION CHART [Contd)

(1) Group Number	(2) Component/Assembly	(3) Maintenance Function	(4) Maintenance Level: Unit C	Unit O	Direct Support F	General Support H	Depot D	(5) Tools and Equipment	(6) Remarks
0308	Lower Spring Pack, Fuel Pump	Inspect				0.5			
		Test				1.0		7,10,12, 13,14	
		Replace				2.0		7,10,12, 13,14	
	Upper Spring Pack, Fuel Pump	Inspect				0.5			
		Test				1.0		7,10,12, 13,14	
		Replace				2.0		7,10,12, 13,14	
0309	Element, Fuel Water Separator	Service	0.1						A
		Replace		0.5				1 thru 4	
0311	Lines and Fittings, Preheater	Inspect	0.1	0.3					A
		Replace		1.0				1 thru 4	
		Repair		0.5				1 thru 4	
	Pump, Preheater Primer	Inspect	0.1	0.1					A
		Replace		0.5				1 thru 4	
	Glow Plug and Nozzle, Preheater	Test		0.1				1 thru 4	
		Inspect		0.1					
		Replace		1.0				1 thru 4	
	Harness and Switch	Inspect		0.1					
		Test		0.2				1 thru 6	
		Replace		1.0				1 thru 6	
	Resistor Preheater and Relay	Test		0.2				1 thru 6	
		Replace		0.5				1 thru 6	
0312	Linkage, Accelerator Control	Adjust		0.5				1 thru 4	
		Replace		1.0				1 thru 4	
	Throttle and Emergency Stop Cable	Inspect	0.2						A
		Replace		1.0				1 thru 4	
	Pedal, Accelerator	Inspect							A
		Adjust		0.3				1 thru 4	
		Replace		0.5				1 thru 4	
04	EXHAUST SYSTEM								
0401	Exhaust Pipes, Clamps, Muffler, Shields	Inspect	0.2	0.5					A
		Adjust		0.5				1 thru 4	
		Replace		4.1				1 thru 4	

Section II. MAINTENANCE ALLOCATION CHART (Contd)

(1) Group Number	(2) Component/Assembly	(3) Maintenance Function	(4) Maintenance Level: Unit C	Unit O	Direct Support F	General Support H	Depot D	(5) Tools and Equipment	(6) Remarks
05	COOLING SYSTEM								
0501	Radiator	Inspect	0.1	0.3					A
		Test		0.5	0.5			1 thru 4, 7,8	E
		Service		0.3				1 thru 4	A, E
		Replace		2.0				1 thru 4	
		Repair			3.0			7,8,9	E
	Hoses, Radiator	Inspect	0.1						A
		Replace		0.5				1 thru 4	
	Tank, Surge	Inspect	0.1						A
		Replace		0.4				1 thru 4	
0504	Water Pump	Inspect		0.2					
		Replace		1.5				1 thru 4	
	Belt, Water Pump	Inspect	0.1	0.1				1 thru 4	A
		Adjust		0.3				1 thru 4	
		Replace		1.0				1 thru 4	
0505	Fan Blade	Inspect		0.1					
		Replace		1.0				1 thru 4	
	Belt, Fan Assembly	Inspect	0.1	0.1				1 thru 4	A
		Adjust		0.4				1 thru 4	
		Replace		1.5				1 thru 4	
	Fan Hub Assembly	Inspect			0.5				
		Replace		0.5				1 thru 4	
		Repair			0.3			7,8,10	
06	ELECTRICAL SYSTEM								
0601	Alternator	Inspect		0.1					
		Test		0.5				1 thru 6	
		Adjust		0.3				1 thru 6	
		Replace		1.0				1 thru 4	
		Repair			4.0			7,8	F
	Belt, Alternator	Inspect	0.1	0.1				1 thru 4	A
		Adjust		0.2				1 thru 4	
		Replace		0.3				1 thru 4	
0603	Starting Motor	Inspect		0.1					
		Test		0.5				1 thru 6	
		Replace		1.5				1 thru 4	
		Repair			3.0			7,8	G

Section II. MAINTENANCE ALLOCATION CHART (Contd)

(1)	(2)	(3)	(4) Maintenance Level					(5)	(6)
			Unit		Direct Support	General Support	Depot		
Group Number	Component/Assembly	Maintenance Function	C	O	F	H	D	Tools and Equipment	Remarks
0606	Valve, Fuel Shutoff Manual	Inspect	0.1						
		Replace		0.7				1 thru 4	A
	Switch, Protective Lockout	Inspect		0.1					
		Replace		0.5				1 thru 4	
0607	Switches and Circuit Breakers	Inspect	0.1						A
		Replace		0.5				1 thru 4	
	Instruments and Gages	Inspect	0.1						A
		Test		0.2				1 thru 4, 6	
		Replace		0.5				1 thru 4	
	Switch, Light	Inspect	0.1						A
		Replace		0.5					
	Switch, Microbrake	Inspect	0.1					1 thru 4	A
		Replace		0.5				1 thru 4	
0608	Control, Directional Turn Indicator	Inspect	0.1						A
		Replace		0.2				1 thru 4	
	Flasher, Turn Signal	Inspect	0.1						A
		Test		0.2				1 thru 4, 6	
		Replace		0.2				1 thru 4	
0609	Lights	Inspect	0.1						A
		Adjust		0.2				1 thru 4	
		Replace		0.5				1 thru 4	
0610	Sending Units and Warning Switches	Inspect	0.1						A
		Replace		1.1				1 thru 4	
	Switch, Stoplight	Inspect	0.1	0.1					
		Replace		0.5				1 thru 4	
	Buzzer, Warning Control	Inspect	0.1						A
		Replace		0.3				1 thru 4	
	Transponder, Fuel Pump	Inspect	0.1	0.2					
		Replace		0.3				1 thru 4	
0611	Horn Assembly	Inspect	0.1						A
		Replace		0.5				1 thru 4	
	Switch, Horn	Inspect	0.1						A
		Replace		0.5				1 thru 4	

Section II. MAINTENANCE ALLOCATION CHART (Contd)

(1) Group Number	(2) Component/Assembly	(3) Maintenance Function	(4) Maintenance Level: Unit C	Unit O	Direct Support F	General Support H	Depot D	(5) Tools and Equipment	(6) Remarks
0612	Batteries	Inspect	0.1						A,H
		Test		0.5				1 thru 4, 6	
		Service		0.5				1 thru 4	A
		Replace		0.5				1 thru 4	
	Cables, Battery	Inspect	0.1	0.1					A
		Replace		0.8				1 thru 4	
		Repair		0.5				1 thru 4	
	Box, Battery	Inspect	0.1	0.1					A
		Service		1.5					
		Replace		1.8				1 thru 4	
		Repair		1.5				6 thru 9	
0613	Chassis Wiring Harness	Inspect		0.1					
		Test		0.5				1 thru 6	
		Replace			4.5			7,8	
		Repair		1.0				1 thru 4, 6	
07	TRANSMISSION								
0700	Transmission Assembly	Inspect	0.2						A
		Service	0.5	1.0				1 thru 4	A
		Replace			6.0			7,8,10	
		Repair		0.1	8.0	10.0		1 thru 4, 7,8,10, 12,13,14	
		Overhaul					20.0		I
	Valve, Breather	Inspect		0.2					
		Service		0.2				1 thru 4	
		Replace		0.2				1 thru 4	
08	TRANSFER CASE ASSEMBLY								
0801	Transfer Case Assembly	Inspect	0.2	0.3					A
		Service		0.5				1 thru 4	A
		Replace			5.0			7,8,10	
		Repair			3.0	4.0		7,8,10, 12,13,14	
		Overhaul					9.5		J
	Coupling, Yoke Input and Output	Inspect		0.3					
		Replace			1.0			7,8,10	

Section II. MAINTENANCE ALLOCATION CHART (Contd)

(1) Group Number	(2) Component/Assembly	(3) Maintenance Function	(4) Maintenance Level: Unit C	Unit O	Direct Support F	General Support H	Depot D	(5) Tools and Equipment	(6) Remarks
	Flange, Output	Inspect		0.3					
		Replace			1.0			7,8,10	
	Cushion, Mounting	Inspect		0.2					
		Replace			1.0			7,8,10	
	Gear, Speedometer	Inspect			0.2				
		Replace			0.5			7,8,10	
	Seals, Input, and Output Shaft	Inspect		0.5					
		Replace		2.0				1 thru 4	
	Bearings, Gears, and Shafts	Inspect				0.5			
		Replace				2.0		7,8,10, 12,13,14	
		Repair				3.0		7,8,10, 12,13,14	
	Controls and Linkage, Transfer	Inspect	0.1						A
		Adjust		0.3				1 thru 4	
		Replace		1.5				1 thru 4	
	Valve, Breather	Inspect		0.2					
		Service		0.2				1 thru 4	
		Replace		0.2				1 thru 4	
09	PROPELLER AND PROPELLER SHAFTS								
0900	Propeller Shafts	Inspect	0.1	0.1					A
		Service		0.1				1 thru 4	
		Replace		1.5				1 thru 4	
		Repair		1.5				1 thru 4	
	Bearing, Center	Inspect		0.1					
		Replace		1.5				1 thru 4	
	Joint, Universal	Inspect	0.1	0.1					
		Service		0.3				1 thru 4	A
		Replace		1.5				1 thru 4	
10	FRONT AXLE								
1000	Front Axle Assembly	Inspect	0.1						A
		Service		1.0				1 thru 4	A
		Replace			5.0			7,8,10	
		Repair		1.0	7.0			7,8,10	
		Overhaul					10.0		K

Section II. MAINTENANCE ALLOCATION CHART (Cont)

(1) Group Number	(2) Component/Assembly	(3) Maintenance Function	(4) Maintenance Level: Unit C	Unit O	Direct Support F	General Support H	Depot D	(5) Tools and Equipment	(6) Remarks
1002	Carrier Assembly, Differential	Inspect	0.1						A
		Service		0.5				1 thru 4	
		Replace			7.0			7,8,10	
		Repair				4.0		7,8,10, 12,13,14	
		Overhaul					8.0		K
1004	Steering Mechanism	Inspect	0.2						
		Service		0.2				1 thru 4	
		Adjust		1.0				1 thru 4	
		Replace			3.0			7,8,10	
	Knuckle, Steering	Inspect			0.5				
		Service		0.2				1 thru 4	A
		Replace			2.5			7,8,10	
		Repair			2.0			7,8,10	
	Boot, Dust (CV)	Inspect		0.3					A
		Replace		0.7				1 thru 4	
11	REAR AXLE								
1100	Rear Axle Assembly	Inspect	0.1	0.3					A
		Service		0.5				1 thru 4	
		Replace			4.0			7,8,10	
		Repair			4.5			7,8,10	
		Overhaul					14.0		K
	Valve, Breather	Inspect		0.1					
		Service		0.2				1 thru 4	
		Replace		0.2				1 thru 4	
1102	Carrier Assembly, Differential	Inspect	0.1						A
		Service		0.5				1 thru 4	A
		Replace			0.5			7,8,10	
		Repair				4.0		7,8,10, 12,13,14	
		Overhaul					8.0		K
	Seal, Pinion	Inspect		0.2					
		Replace			1.0			7,8,10	
	Flange, Companion	Inspect		0.2					
		Replace			1.0			7,8,10	
		Repair			1.6			7,8,10	

Section II. MAINTENANCE ALLOCATION CHART (Contd)

(1) Group Number	(2) Component/Assembly	(3) Maintenance Function	(4) Maintenance Level: Unit C	Unit O	Direct Support F	General Support H	Depot D	(5) Tools and Equipment	(6) Remarks
12	BRAKES								
1201	Cable, Parking Brake	Inspect	0.1	0.1					
		Adjust		0.5				1 thru 4	
		Replace		1.5				1 thru 4	
	Brakeshoes, Parking	Inspect	0.1	0.3					
		Adjust	0.2	0.5					
		Replace		2.0				1 thru 4	
		Repair			1.0			7,8,9,10	
	Brakedrum, Parking	Inspect		0.3					
		Replace		1.5				1 thru 4	
1203	Brakeshoes, Service	Inspect		0.5					
		Adjust		1.0				1 thru 4	
		Replace		3.0				1 thru 4	
		Repair			0.5			7,8,9,10	
1204	Lines and Fittings	Inspect	0.1						A,Q
		Replace		3.5				1 thru 4	
	Cylinder, Air-Hydraulic	Inspect		0.2					
		Service		0.5				1 thru 4	
		Replace		1.0				1 thru 4	
	Cylinder, Wheel	Inspect		0.1					
		Service		1.5				1 thru 4	
		Replace		2.0				1 thru 4	
	Master Cylinder	Inspect	0.2						
		Service		0.5				1 thru 4	
		Replace		2.0				1 thru 4	
1206	Brake Pedal	Inspect	0.2	0.2					
		Adjust		0.5				1 thru 4	
		Replace		0.2				1 thru 4	
1208	Air Reservoirs	Inspect	0.1	0.2					
		Replace		0.8				1 thru 4	
1209	Governor, Air	Adjust		0.3				1 thru 4	
		Replace		0.3				1 thru 4	
	Compressor, Air	Inspect	0.1						A
		Adjust			0.3			7,8,10	
		Replace			1.5			7,8,10	
		Repair				2.5		7,8,10, 12,13,14	

Section II. MAINTENANCE ALLOCATION CHART [Contd)

(1) Group Number	(2) Component/Assembly	(3) Maintenance Function	(4) Maintenance Level: Unit C	Unit O	Direct Support F	General Support H	Depot D	(5) Tools and Equipment	(6) Remarks
	Coolant Lines, Air Compressor	Inspect		0.1					
		Replace		0.5				1 thru 4	
1211	Trailer Brake Connections and Controls	Inspect	0.1						P
		Replace		0.5				1 thru 4	
13	WHEELS AND HUBS								
1311	Wheel	Inspect	0.1						A
		Replace		1.0				1 thru 4	
	Wheel Bearings, Front Hub and Drum	Inspect		0.5					
		Service		1.0				1 thru 4	
		Adjust		0.5				1 thru 4	
		Replace		2.5				1 thru 4	
1313	Tires	Inspect	0.2						A
		Service	0.2						A,L
		Replace		1.0				1 thru 4	
		Repair		1.0				1 thru 4	L
		Rebuild					2.0		L
	Tubes	Replace		1.0				1 thru 4	
		Repair		1.0				1 thru 4	L
14	STEERING								
1401	Link, Drag	Inspect		0.2					
		Replace		1.0				1 thru 4	
	Tie Rod Assembly	Inspect		0.2					
		Adjust		0.5				1 thru 4	
		Replace		1.0				1 thru 4	
	Arm, Pitman Steering	Inspect		0.2					
		Replace		1.0				1 thru 6	
	Column, Steering	Inspect		0.2					
		Replace		2.5				1 thru 4	
		Repair		2.0				1 thru 4	
	Wheel, Steering	Inspect		0.2					
		Replace		0.5				1 thru 4	
	Propeller, Shaft, Steering	Inspect	0.1	0.1					A
		Service		0.1				1 thru 4	
		Replace		0.5				1 thru 4	
		Repair		1.0				1 thru 4	

Section II. MAINTENANCE ALLOCATION CHART (Contd)

(1) Group Number	(2) Component/Assembly	(3) Maintenance Function	(4) Maintenance Level: Unit C	Unit O	Direct Support F	General Support H	Depot D	(5) Tools and Equipmen	(6) Remarks
1407	Power Steering Gear Assembly	Inspect		0.2					
		Service		0.5				1 thru 4	
		Adjust			0.5			7,8,10	
		Replace			3.0			7,8,10	
		Repair			2.5			7,8,10	
1410	Hydraulic Pump and Reservoir	Inspect	0.2						A
		Service		0.5				1 thru 4	
		Replace		3.0				1 thru 4	
	Belt, Power Steering Pump	Inspect	0.1	0.1					A
		Adjust		0.2				1 thru 4	
		Replace		0.5				1 thru 4	
1411	Lines and Fittings, Power Steering	Inspect	0.1						
		Replace		0.5				1 thru 4	D
1412	Cylinder, Steering Assist	Inspect	0.1						A
		Adjust		0.5				1 thru 4	
		Replace		1.5				1 thru 4	
		Repair			2.0			7,8,10	
15	FRAME AND TOWING ATTACHMENTS								
1501	Frame	Inspect	0.3						A
		Repair			2.5			7 thru 11	M
	Bumper, Front	Inspect	0.2						A
		Replace		2.0				1 thru 4	
	Brackets, Frame	Inspect	0.1						A
		Replace		1.0				1 thru 4	
1503	Hook, Pintle	Inspect	0.1						A
		Service		0.1				1 thru 4	A
		Replace		0.5				1 thru 4	
		Repair		0.5				1 thru 4	
1504	Spare Tire Carrier	Inspect	0.1					1 thru 4	A
		Replace		1.0				1 thru 4	M
		Repair		1.0	1.0			7 thru 11	
1506	Fifth Wheel	Inspect	0.2						A
		Service		0.5				1 thru 4	A
		Replace		2.5				1 thru 4	
		Repair			2.0			7 thru 11	

Section II. MAINTENANCE ALLOCATION CHART (Contd)

(1) Group Number	(2) Component/Assembly	(3) Maintenance Function	(4) Maintenance Level: Unit C	Unit O	Direct Support F	General Support H	Depot D	(5) Tools and Equipment	(6) Remarks
16	SPRINGS AND SHOCK ABSORBER								
1601	Front Spring	Inspect	0.1						A
		Replace		3.0				1 thru 4	
		Repair		2.0				1 thru 4	
	Shackles and Bolts	Inspect	0.1						A
		Replace		1.0				1 thru 6	
	Springs, Rear and Front Seat	Inspect	0.1						A
		Adjust		0.3				1 thru 4	
		Replace		4.0				1 thru 4	
		Repair		2.0				1 thru 4	
1604	Shock Absorber	Inspect	0.1						A
		Replace		0.5				1 thru 4	
1605	Torque Rods	Inspect	0.1						A
		Replace		1.5				1 thru 4	
18	BODY, CAB, HOOD								
1801	Hood	Inspect	0.1						A
		Adjust		0.5				1 thru 4	
		Replace		2.0				1 thru 4	
		Repair		0.5	1.0			1 thru 4, 7 thru 11	N
	Cab	Inspect	0.1						A
		Replace				20.0		7,8,12,13	P
		Repair				6.0		7 thru 14	
	Doors	Inspect	0.1						A
		Service		0.1				1 thru 4	
		Adjust		0.5				1 thru 4	
		Replace		1.0				1 thru 4	
		Repair			1.0			7 thru 11	N
1802	Fenders	Inspect	0.3						A
		Replace		2.0				1 thru 4	
		Repair		2.0				7,8,9,11	N
	Running Board	Inspect	0.5						A
		Replace		2.0				1 thru 4	
		Repair			1.5			7,8,9,11	N

Section II. MAINTENANCE ALLOCATION CHART (Contd)

(1) Group Number	(2) Component/Assembly	(3) Maintenance Function	(4) Maintenance Level: Unit C	Unit O	Direct Support F	General Support H	Depot D	(5) Tools and Equipment	(6) Remarks
1806	Seats	Inspect	0.1						
		Replace		1.0				1 thru 4	
		Repair			1.0			7,8,9	S
1810	Body, Cargo	Inspect	0.2						
		Replace			3.0			6 thru 9	
		Repair			10.0			7,8,9,11	C,N
	Tailgate	Inspect	0.2	0.2					
		Replace		1.0				1 thru 4	
		Repair		0.5	2.0			1 thru 4, 7,8,9,11	C,N
	Racks	Inspect	0.2						
		Replace	0.3						
		Repair		1.0				1 thru 4	
	Seat, Troop	Inspect	0.2						
		Replace	0.5						A
		Repair		2.0				1 thru 4	
	Body, Dump	Inspect	0.2						
		Replace			6.0			6 thru 9	
		Repair			3.0			7,8,9,11	C,N
	Tailgate	Inspect	0.2						
		Adjust		0.1				1 thru 4	
		Service	0.1						
		Replace		0.5				1 thru 4	
		Repair		0.5	0.8			1 thru 4, 7,8,9,11	C,N
1812	Body, Expansible Van	Inspect	0.2						
		Replace				3.5		7,10,12, 13	
		Repair				3.5		7,8,12,13, 14	C,N
	Doors	Replace		2.5				1 thru 4	
		Repair			5.0			7,8,9,11	N
	Roof, Ceiling, Sides, Floors, and Underframe	Replace				8.0		7,8,12,13, 14	
		Repair				16.0		7,8,12,13, 14	N
	Counterbalance	Service		1.0				1 thru 4	
		Replace			8.0			7,8	

Section II. MAINTENANCE ALLOCATION CHART (Contd)

(1) Group Number	(2) Component/Assembly	(3) Maintenance Function	(4) Maintenance Level: Unit C	Unit O	Direct Support F	General Support H	Depot D	(5) Tools and Equipment	(6) Remarks
	Electrical Wiring	Replace			4.0			6,7,8,9	
		Repair		0.2	4.0			6,7,8,9	
	Heater	Replace		4.0				1 thru 4	
		Repair			1.0			6,7,8	
	Air Conditioner	Install			4.0			7,8	
		Remove			4.0			7,8	
	Boarding Ladders and Hardware	Inspect	0.1						A
		Replace	0.3						
	Body, Wrecker	Inspect	0.2						
		Replace			3.5			7,8	
		Repair				20.0		7,8,9,11, 12,13,14	C,N
	Controls, Dump Tailgate	Adjust		0.5				1 thru 4	
		Inspect	0.3						A
		Replace		2.0				1 thru 4	
20	HOIST, WINCH, AND POWER TAKEOFF								
2001	Winch, Front, Rear, and Mid Winch	Inspect	0.1						A,R
		Service		0.5				1 thru 4	R
		Adjust		0.5				1 thru 4	
		Replace		3.0				1 thru 4	
		Repair			4.0			7,8	
		Overhaul					11.0		O
	Band, Automatic	Adjust		0.5				1 thru 4	
		Replace			2.0			7,8	
	Cable, Winch	Inspect	0.5						A
		Service	0.5						A,R
		Replace		1.0				1 thru 4	A,R
		Repair		0.5				1 thru 4	A,R
	Drum, Brake	Adjust		1.0				1 thru 4	
		Replace			2.0			7,8	
	Shaft, Drive Assembly	Inspect		0.3					
		Service	0.2						
		Replace		1.0				1 thru 4	
		Repair		2.0				1 thru 4	
	Lines and Fittings, Hydraulic	Inspect		0.2					
		Replace			0.5			7,8,10	D

Section II. MAINTENANCE ALLOCATION CHART (Contd)

(1)	(2)	(3)	(4) Maintenance Level					(5)	(6)
			Unit		Direct Support	General Support	Depot		
Group Number	Component/Assembly	Maintenance Function	C	O	F	H	D	Tools and Equipment	Remarks
2001	Boom, Assembly	Inspect		0.2					
		Test			0.5			7,8,10	
		Service		0.3				1 thru 4	
		Replace			15.0			7,8	
		Repair			8.0			7,8,9	
	Hoist Cylinders and Power Controls Hoist Cylinder	Inspect							
		Adjust		0.3				1 thru 4	
		Replace			8.0			7,8	
		Repair				6.0		12,13,14	
	Valve, Control (M816)	Inspect		0.5					
		Replace		2.0				1 thru 4	
		Repair				4.0		12,13,14	
	Cylinder, Boom Elevating	Inspect	0.2		0.5				
		Replace			2.0			7,8	
		Repair				3.0		12,13,14	
	Cylinder, Extension	Inspect			0.5				
		Replace			3.5			7,8	
		Repair				4.0		12,13,14	
	Motor and Gearbox, Hydraulic Swing	Replace			2.0			7,8	
		Repair				5.0		12,13,14	
	Winch, Hoist Assembly	Inspect		0.2					
		Service		0.5				1 thru 4	A,R
		Adjust		0.5				1 thru 4	
		Replace			4.5			7,8	
		Repair			4.0			7,8	
	Cable, Hoist Winch	Inspect	0.5						A,R
		Service	0.5					1 thru 4	A,R
		Replace		2.0					
		Repair		0.5					
	Valve Bank, Control Assembly	Inspect		0.5					
		Test		0.5					
		Replace		2.5				1 thru 4	
		Repair		4.0				1 thru 4	
	Motor, Hydraulic	Inspect		0.2					
		Replace			2.0			7,8	
	Reservoir, Hydraulic Oil	Inspect	0.1						A
		Service	0.1						A
		Replace		2.0				1 thru 4	

Section II. MAINTENANCE ALLOCATION CHART (Contd)

(1) Group Number	(2) Component/Assembly	(3) Maintenance Function	(4) Maintenance Level: Unit C	Unit O	Direct Support F	General Support H	Depot D	(5) Tools and Equipment	(6) Remarks
	Winch, Cable Tensioner	Inspect	0.1						
		Service	0.1						
		Replace		0.5					
		Repair				1.0		12,13,14	
	Winch Assembly, Side	Service	0.5						
		Replace			1.2			7,8,9	
	Cable, Winch Assembly	Inspect	0.1						
		Service	0.3						
		Replace		1.0				1 thru 4	
		Repair		1.5				1 thru 4	
	Roller, Rear	Service	0.5						
		Replace		2.0				1 thru 4	
		Repair			2.5			7,8	
	Snatch, Block	Service	0.1						
		Replace	0.1						
		Repair		1.5				1 thru 4	
	Sheave Swivel, Winch Assembly	Replace		0.5				1 thru 4	
		Repair		1.5				1 thru 4	
	Pump, Hydraulic Valve	Inspect	0.2						A
		Service		0.1				1 thru 4	
		Replace			3.2			7,8	
		Repair			4.0			7,8	
	Valves, Control	Replace			3.5			7,8	
		Repair			4.0			7,8	
	Lines and Fittings, Hydraulic	Inspect	0.2						A
		Repair		0.5				1 thru 4	
	Pump, Hydraulic Hoist	Replace		1.0				1 thru 4	
		Repair		2.0				1 thru 4	
	Control box, Dump	Replace		0.3				1 thru 4	
		Repair		0.4				1 thru 4	
	Oil Reservoir, Wrecker	Inspect		0.3					
		Service	0.1					1 thru 4	A
		Replace		1.6				1 thru 4	
	Control, Throttle Lever	Adjust		0.3				1 thru 4	
		Replace		1.0				1 thru 4	

Section II. MAINTENANCE ALLOCATION CHART (Contd)

(1) Group Number	(2) Component/Assembly	(3) Maintenance Function	(4) Maintenance Level: Unit C	Unit O	Direct Support F	General Support H	Depot D	(5) Tools and Equipment	(6) Remarks
	Tensioner, Winch	Inspect		0.3					
		Replace		0.5				1 thru 4	
		Repair		0.5				1 thru 4	
	Fluid, Filter Hydraulic Wrecker	Inspect	0.2	0.1					A
		Service		0.2				1 thru 4	
		Replace		0.3				1 thru 4	
	Vertical and Horizontal Rollers, Rear Winch	Inspect		0.2					
		Replace		1.0				1 thru 4	
		Repair			0.5			7,8	
	Cylinder, Boom Lift	Inspect			0.8				
		Replace			1.8			1 thru 4	
		Repair				4.0		7,8	
	Cylinder, Ram Assembly	Inspect			0.8				
		Replace			1.8			1 thru 4	
		Repair				4.0		7,8	
	Controls, Van Liftgate	Inspect	0.1						A
		Adjust		0.5				1 thru 4	
		Replace		3.5				1 thru 4	
	Cylinder, Van Liftgate	Inspect							
		Replace			3.0			7,8	
		Repair				2.5		7,8,9,12, 13,14	
2004	Power Takeoff, Transmission	Inspect		0.2					
		Replace			1.0			7,8,10	
		Repair			4.0			7,8,10	
	Linkage, Shift Power Takeoff	Adjust		0.3				1 thru 4	
		Replace		1.0				1 thru 4	
	Power Divider	Replace			1.2			7,8	
		Repair				2.5		7,8,10	
	Power Divider Controls and Linkage	Adjust		0.3				1 thru 4	
		Replace		0.5				1 thru 4	
	Shaft, Propeller Drive	Service		0.1				1 thru 4	
		Replace		0.8				1 thru 4	
		Repair		1.4				1 thru 4	

Section II. MAINTENANCE ALLOCATION CHART (Contd)

(1) Group Number	(2) Component/Assembly	(3) Maintenance Function	(4) Maintenance Level: Unit		Direct Support	General Support	Depot	(5) Tools and Equipmen	(6) Remarks
				O		H	D		
22	BODY, CHASSIS AND ACCESSORY ITEMS								
2201	Curtains, Body Cover	Inspect							A
		Replace						1 thru 4	A
		Repair							S
2201	Bows	Inspect							A
		Replace						1 thru 4	
	Cover, Cap Top								A
		Replace						1 thru 4	A
		Repair							S
2202	Mirror, Rear View	Inspect							A
		Replace						1 thru 4	
	Spotlight, Flood	Replace						1 thru 4	
		Repair						1 thru 4	
	Motor, Windshield Wiper and Accessories	Inspect							A
		Adjust						1 thru 4	
		Replace						1 thru 4	
	Washer Bottle and Controls	Service							A
		Replace						1 thru 4	
	Arm and Blade, Windshield Wiper	Inspect							A
		Adjust						1 thru 4	
		Replace						1 thru 4	
33	SPECIAL PURPOSE KITS								
3303	Winterization Kits								
	Kit, Engine Coolant Heater	Inspect							A
		Install						6,7,8,9,11	P
	Heater, Engine Coolant	Inspect							A
		Replace						1 thru 4	
		Repair						6,7,8,9,11	
	Kit, Radiator Cover	Inspect							A
		Install						7,8,9,11	P
3303	Kit, Hardtop Cab	Inspect							A
		Install						1 thru 4	P

Section II. MAINTENANCE ALLOCATION CHART (Contd)

(1) Group Number	(2) Component/Assembly	(3) Maintenance Function	(4) Maintenance Level: Unit C	Unit O	Direct Support F	General Support H	Depot D	(5) Tools and Equipment	(6) Remarks
	Kit, Fuel Burning Personnel Heater	Inspect	0.2						A
		Install			6.0			7,8,9,11	P
	Heater, Fuel Burning	Inspect	0.2						A
		Replace		0.5				1 thru 4	
		Repair			1.5			6,7,8	
3305	Kit, Deepwater Fording	Inspect	0.2						A
		Install			3.0			6,7,8,9,11	P
3307	Special Purpose Kits								
	Kit, Troop Seat and Rack	Inspect	0.1						A
		Install			1.0			7,8,9,11	P
	Kit, Fixed and Floating Seatbelt	Inspect	0.1						
		Install			4.0				
	Kit, A-Frame	Inspect	0.2						A
		Install		1.0				1 thru 4	P
	Kit, Fire Extinguisher Mounting	Inspect	0.1						
		Install		1.0				1 thru 4	P
	Kit, Machine Gun Mounting	Inspect	0.1						
		Install		3.5				1 thru 4	P
	Kit, Decontamination (M13) Apparatus Mounting	Inspect	0.1						
		Install		3.0				1 thru 4	P
	Kit, Rifle Mounting	Inspect	0.1						A
		Install			2.0			7,8,9,11	P
	Kit, Hand Airbrake	Inspect	0.1						A
		Install		4.0				1 thru 4	P
	Kit, 100 Amp Alternator	Install		2.0				1 thru 4	P
	Kit, Convoy Warning Light	Install		4.0				1 thru 4	P
	Kit, European Mini-Lighting	Install		1.4				1 thru 4	P
	Kit, Vehicle Tiedown	Install		2.0				1 thru 4	P
	Kit, Tachograph	Inspect	0.1						
		Service	0.2						
		Install		2.0				1 thru 4	P
		Replace		1.0				1 thru 4	

Section II. MAINTENANCE ALLOCATION CHART (Contd)

(1)	(2)	(3)	(4) Maintenance Level					(5)	(6)
			Unit		Direct Support	General Support	Depot		
Group Number	Component/Assembly	Maintenance Function	C	O	F	H	D	Tools and Equipment	Remarks
47	GAGES (NON-ELECTRICAL)								
4701	Speedometer	Inspect	0.1						A
		Replace		1.0				1 thru 4	
	Tachometer	Inspect	0.1						A
		Replace		1.0				1 thru 4	
	Tachograph	Inspect	0.1						
		Replace		0.5				1 thru 4	
	Driveshaft, Flexible	Inspect		0.2					
		Replace		1.0				1 thru 4	
4702	Gage, Air Pressure	Inspect	0.1						
		Replace		0.5				1 thru 4	
	Gage, Oil Pressure	Inspect	0.1						
		R						ru	

Section III. TOOL AND TEST EQUIPMENT REQUIREMENTS

(1) REFERENCE CODE	(2) MAINTENANCE CATEGORY	(3) NOMENCLATURE	(4) NATIONAL/NATO STOCK NUMBER	(5) TOOL NUMBER
1	O	Tool Kit, General Mechanic's	5180-00-177-7033	SC5180-90LN26
2	O	Shop Equipment, No. 1 Common Organizational Maintenance and Repair	4910-00-754-0654	SC4910-95-CL-A74
3	O	Shop Equipment, No. 1 Supplemental Organizational Maintenance and Repair	4910-00-754-0653	SC4910-95-CL-A73
4	O	Shop Equipment, No. 2 Common Organizational Maintenance and Repair	4910-00-754-0650	SC4910-95-CL-A72
5	O	Tool Kit, Organizational Maintenance	5180-00-762-1737	5704499
6	O	Tool Kit, Fuel and Electrical	5180-00-754-6655	SC5180-95-CL-B08
7	F	Tool Kit, General Mechanic's	5180-00-699-5273	SC5180-90-CL-N05
8	F	Shop Equipment, Automotive Field Maintenance and Repair	4910-00-754-0705	SC4910-95-CL-A31
9	F	Shop Equipment, Field Maintenance Welding	3470-00-357-7268	SC3470-95-CL-A08
10	F	Tool Kit, Direct Support	5180-00-762-1740	5704500
11	F	Tool Kit, Body and Fender Repair	5180-00-754-0643	SC5180-90-CL-N34
12	H	Shop Equipment, No. 1 Supplemental Field Maintenance and Repair	4910-00-754-0706	SC4910-95-CL-A62
13	H	Shop Equipment, No. 2 Supplemental Field Maintenance and Repair	4910-00-754-0707	SC4910-95-CL-A63
14	H	Tool Kit, General Support	5180-00-762-1741	5704501
15	F	Tool Kit, Glass Cutting	5180-00-357-7737	SC4940-95-CL-A18

Section IV. REMARKS

REFERENCE CODE	REMARKS
A	Perform PMCS as shown in TM 9-2320-260-10.
B	Engine overhaul will be in accordance with DMWR 9-2815-500.
C	Welding will be in accordance with TM 9-237.
D	Repair of lines and fittings will be in accordance with TM 9-243.
E	Service, test, and repair of radiator will be in accordance with TM 750-254.
F	Repair of alternator will be in accordance with TM 9-2920-225-34.
G	Repair of starter will be in accordance with TM 9-2920-243-34.
H	Repair of batteries will be in accordance with TM 9-6140-200-14.
I	Transmission overhaul will be in accordance with DMWR 9-2520-509.
J	Transfer case overhaul will be in accordance with DMWR 9-2520-507.
K	Overhaul of front and rear axle will be in accordance with DMWR 9-2520-508.
L	Tires/Tubes: Repair TM 9-2610-200-24 Inspection TM 9-2610-201-14 Storage TM 743-200-1
M	Repair of frames will be in accordance with TB 2300-247-40.
N	Metal body repair will be in accordance with FM 43-2.
O	Overhaul of front and rear winches will be in accordance with DMWR-3830-501.
P	Refer to kit installation instructions for kit installation.
Q	Inspection of brake lines will be in accordance with TB 9-2300-405-14.
R	Service/inspection of winch/hoist wire rope/cables will be in accordance with TB 43-1042 and TB 9-0352.
S	Repair of canvas will be in accordance with TM 10-267.

APPENDIX C
EXPENDABLE/DURABLE SUPPLIES AND MATERIALS LIST

Section I. Introduction (page C-1)
Section II. Expendable/Durable Supplies and Materials List (page C-2)

Section I. INTRODUCTION

C-1. SCOPE

This appendix lists expendable/durable supplies and materials you will need to maintain M809 series vehicles. This listing is for informational purposes only and is not authority to requisition listed items. These items are authorized to you by CTA 50-970, Expendable/Durable Items (except Medical, Class V, Repair Parts, and Heraldic Items), or CTA 8-100, Army Medical Department Expendable/Durable Items.

C-2 EXPLANATION OF COLUMNS

a. Column (1) - Item Number. This number is assigned to the entry in the listing and is referenced in the "INITIAL SETUP" of applicable tasks under the heading of "Material/Parts."

b. Column (2) - Level. This column identifies the lowest level of maintenance that requires the listed item.

C - Operator/Crew
O - Unit Maintenance

c. Column (3) - National Stock Number. This is the national stock number assigned to the item; use it to request or requisition the item.

d. Column (4) - Description. Indicates the federal item name and, if required, a description to identify the item. The last line for each item indicates the Federal Supply Code for Manufacturer (FSCM) in parenthesis followed by the part number.

e. Column (6) - Unit of Measure (U/M). Indicates the measure used in performing the actual maintenance fimction. This measure is expressed by a two-character alphabetical abbreviation (e.g.; ea, ft, lb). If the unit of measure differs from the unit of issue, requisition the lowest unit of issue that will satisfy your requirements. Adjust when higher category maintenance requirements are involved.

Section II. EXPENDABLE/DURABLE SUPPLIES AND MATERIALS LIST

(1) ITEM NUMBER	(2) LEVEL	(3) NATIONAL STOCK NUMBER	(4) DESCRIPTION	(5) U/M
1	O		ADHESIVE: natural rubber, (91488) SRG792	
		8040-00-262-9011	1 Pint Can	PT
2	O		ADHESIVE: synthetic rubber, type II, MMM-A-1617 (92108) 25011-2	
		8040-00-152-0067	6 Ounce Container	OZ
3	O		ADHESIVE SEALANT: silicone rubber, Silastic, 732 RTV (clear) non-hardening (80063) SM-C-77380-5	
		8040-00-833-9563	5 Ounce Tube	OZ
4	C		ANTIFREEZE: ethylene glycol [-65°F (-54°C)] inhibited (O-A-548, type I) (81349) MIL-A-46153	
		6850-00-181-7929	1 Gallon Container	GL
		6850-00-181-7933	5 Gallon Container	GL
		6850-00-181-7940	55 Gallon Drum	GL
5	C		ANTISEIZE COMPOUND: high temperature (05972) 767-60	
		8030-00-155-6444	1 Pound Can	LB
6	O		BAG: plastic, polyethylene, 500 ea box (58336) A-A-1799	
		8105-00-837-7754	1 Box	BX
7	O		BOTTLES: oil sample, 120 ea box (81996) PD 8125-1	
		8125-01-082-9697	1 Box	BX
8	O		BRAKE FLUID: silicone, automotive, all-weather, operational and preservative (81349) MIL-B-46176	
		9150-00-102-9455	1 Gallon Can	GL
		9150-00-123-3152	5 Gallon Can	GL
		9150-00-072-8379	55 Gallon Drum	GL
9	O		CAP AND PLUG SET (19207) 10935405	
		5340-00-450-5718	Set	EA

Section II. EXPENDABLE/DURABLE SUPPLIES AND MATERIALS LIST (Contd)

(1) ITEM NUMBER	(2) LEVEL	(3) NATIONAL STOCK NUMBER	(4) DESCRIPTION	(5) U/M
10	O		CHALK: marking, white (70362) 510	
		7510-00-164-8893	1 Gross	GR
11	O		CLEANING COMPOUND: engine, cooling system (oxalic acid/borax inhibitor) (81349) MIL-C-10597	
		6850-00-598-7328	1 Kit	KT
12	O		CLOTH: cleaning, lint-free, general purpose, white (81349) MIL-C-85043	
		7920-00-044-9281	10 Pound Box	LB
13	O		CORD: fibrous (81349) MIL-C-4232	
		4020-00-252-2942	150 Yards	YD
14	O		CORROSION PREVENTIVE COMPOUND: grade II, soft film (81349) MIL-C-16173	
		8030-00-244-1297	1 Gallon Can	GL
15	O		DETERGENT: general purpose (58536) A-A-39	
		7930-00-515-2477	1 Gallon Container	GL
		7930-00-526-2919	5 Gallon Container	GL
		7930-00-526-2920	55 Gallon Drum	GL
16	C		GREASE: automotive and artillery (98308) Braycote 610	
		9150-00-190-0904	1-3/4 Pound Can	LB
		9150-00-190-0905	6-1/2 Pound Can	LB
		8150-00-190-0907	35 Pound Can	LB
17	O		GREASE: graphite, hard, grade III (81348) VV-G-671	
		9150-00-257-5370	1-3/4 Pound Can	LB
		9150-00-235-5568	6-1/2 Pound Can	LB
		9150-00-272-7652	35 Pound Can	LB
18	O		OIL: lubricating, gear, multi-purpose, GO 80/90 (15958) LF2336	
		9150-00-905-9100	1 Gallon Can	GL

Section II. EXPENDABLE/DURABLE SUPPLIES AND MATERIALS LIST (Contd)

(1) ITEM NUMBER	(2) LEVEL	(3) NATIONAL STOCK NUMBER	(4) DESCRIPTION	(5) U/M
19	C		OIL: lubricating, internal combustion engine, tactical service, OE/HDO 10 (98308) MIL-L-2104, Brayco 421C	
		9150-00-183-7807	1 Gallon Container	GL
		9150-00-186-6668	5 Gallon Container	GL
		9150-00-191-2772	55 Gallon Drum	GL
20	C		OIL: lubricating, internal combustion engine, tactical service, OE/HDO 30 (15958) MIL-L-2104, Allied Co 30	
		9150-00-186-6681	1 Quart Can	QT
		9150-00-188-9850	5 Gallon Container	GL
		9150-00-189-6729	55 Gallon Drum	GL
21	O		METHYL-ETHYL-KETONE: (19207) 7527656	
		6810-00-264-8983	3 Ounce Bottle	OZ
22	O		RAG: wiping, unbleached cotton, mixed colors (58536) A-A-531	
		7920-00-205-1711	55 Pound Bale	LB
23	O		SEALING COMPOUND: thixotropic paste, soft (05972) 592-31	
		8030-01-054-0740	50 Cubic Centimeter Tube	CC
24	O		SEALING COMPOUND: thread and gasket, fuel, oil, and water resistant (30780) MIL-S-7916, Unipar	
		8030-00-845-3499	1 Gallon Can	GL
25	O		SEALING COMPOUND: anaerobic, low viscosity, type I (05972) 609-41	
		8030-00-891-8358	8 Ounce Bottle	OZ
26	O		SEALING AND LUBRICATING COMPOUND: thread-locking, anaerobic, single component MIL-S-46163 (05972) 29031	
		8030-00-111-2762	50 Cubic Centimeter Tube	CC
27	O		SEALING COMPOUND: non-hardening, type II, MIL-S-45180 (87247) Formagasket II	
		8030-00-252-3391	11 Ounce Tube	OZ

Section II. EXPENDABLE/DURABLE SUPPLIES AND MATERIALS LIST (Contd)

(1) ITEM NUMBER	(2) LEVEL	(3) NATIONAL STOCK NUMBER	(4) DESCRIPTION	(5) U/M
28	O		SOLDER: resin core, 60/40, 0.094 in. dia (81348) AE160.094	
		3439-00-224-3567	5 Pound Spool	LB
29	C		SOLVENT: drycleaning, P-D-680, type II (81346) ASTM D 235	
		6850-00-281-1985	1 Gallon Container	GL
30	O		TAPE: antiseizing, white, MIL-T-27730, 1/2 in. wide x 260 in. long x 0.0035 in. thick, snap-on shell (81755) P5025-2R	
		8030-00-889-3535	1 Each	EA
31	O		TAPE: insulation, electrical: (75037) 17-3/4 in. black	
		3970-00-419-4291	108-Foot Roll	FT
32	O		TRICHLOROETHYLENE (81349) O-T-634	
		6810-00-678-4418	1 Gallon Can	GL
		6810-00-184-4794	5 Gallon Can	GL
		6810-00-184-4800	55 Gallon Drum	GL
33	O		STRAP: tiedown, electrical components, self-locking, type I, class I, 10 in. long (96906) MS3367-7-9	
		5975-00-570-9598	1 Hundred	HD
34	O		WIRE: steel, non-electrical (81348) QQW461	
		9505-00-554-0098	1 Pound Spool	LB

APPENDIX D
TORQUE LIMITS

D-1 . GENERAL

This section provides general torque limits for screws used on the M809 series vehicles. Special torque limits are indicated in the maintenance procedures for applicable components. The general torque limits given in this appendix shall be used when specific torque limits are not indicated in the maintenance procedure. These general torque limits cannot be applied to screws that retain rubber components. The rubber components will be damaged before the correct torque limit is reached. If a special torque limit is not given in the maintenance instructions, tighten the screw or nut until it touches the metal bracket, then tighten it one more turn.

D-2. TORQUE LIMITS

Table D-1 lists dry torque limits. Dry torque limits are used on screws that do not have lubricants applied to the threads. Table D-2 lists wet torque limits. Wet torque limits are used on screws that have high pressure lubricants applied to the threads.

D-3. HOW TO USE TORQUE TABLE

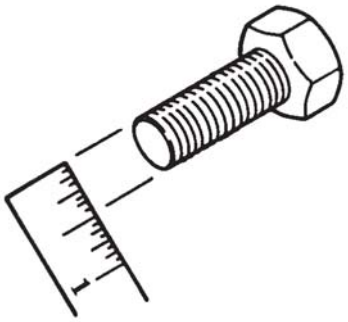

a. Measure the diameter of the screw you are installing.

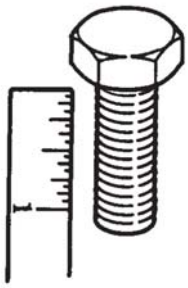

b. Count the number of threads per inch.

c. Under the heading SIZE, look down the left hand column until you find the diameter of the screw you are installing (there will usually be two lines beginning with the same size).

d. In the second column under SIZE, find the number of threads per inch that matches the number of threads you counted in step b.

CAPSCREW HEAD MARKINGS

Manufacturer's marks may vary.
These are all SAE Grade 5
(3-line).

e. To find the grade screw you are installing, match the markings on the head to the correct picture of CAPSCREW HEAD MARKINGS on the torque table.

f. Look down the column under the picture you found in step e. until you find the torque limit (in lb-ft or N·m) for the diameter and threads per inch of the screw.

Table D-1. Torque Limits for Dry Fasteners.

CAPSCREW HEAD MARKINGS

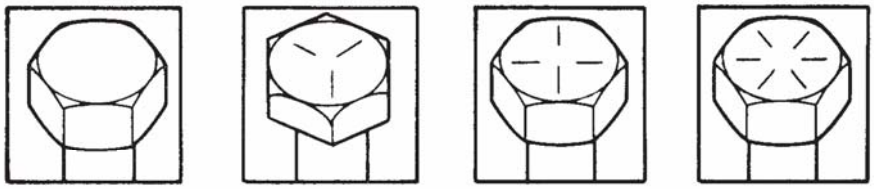

SIZE			TORQUE							
			SAE GRADE NO. 1 or 2		SAE GRADE NO. 5		SAE GRADE NO. 6 or 7		SAE GRADE NO. 8	
DIA. INCHES	THREADS PER INCH	DIA. MILLIMETERS	POUND FEET	NEWTON METERS	POUND FEET	NEWTON METERS	POUND FEET	NEWTON METERS	POUND FEET	NEWTON METERS
1/4	20	6.35	5	6.78	8	10.85	10	13.56	12	16.27
1/4	28	6.35	6	8.14	10	13.56	—	—	14	18.98
5/16	18	7.94	11	14.92	17	23.05	19	25.76	24	32.52
5/16	24	7.94	13	17.63	19	25.76	—	—	27	36.61
3/8	16	9.53	18	24.41	31	42.04	34	46.10	44	59.66
3/8	24	9.53	20	27.12	35	47.46	—	—	49	66.44
7/16	14	11.11	28	37.97	49	66.44	55	74.58	70	94.92
7/16	20	11.11	30	40.68	55	74.58	—	—	78	105.77
1/2	13	12.70	39	52.88	75	101.70	85	115.26	105	142.38
1/2	20	12.70	41	55.60	85	115.26	—	—	120	162.72
9/16	12	14.29	51	69.16	110	149.16	120	162.72	155	210.18
9/16	18	14.29	55	74.58	120	162.72	—	—	170	230.52
5/8	11	15.88	63	85.43	150	203.40	167	226.45	210	284.76
5/8	18	15.88	95	128.82	170	230.52	—	—	240	325.44
3/4	10	19.05	105	142.38	270	366.12	280	379.68	375	508.50
3/4	16	19.05	115	155.94	295	400.02	—	—	420	569.52
7/8	9	22.23	160	216.96	395	535.62	440	596.64	605	820.38
7/8	14	22.23	175	237.30	435	589.86	—	—	675	915.30
1	8	25.40	235	318.66	590	800.04	660	894.96	910	1233.96
1	14	25.40	250	339.00	660	894.96	—	—	990	1342.44
1-1/8	—	28.58	—	—	800-880	1084.8-1193.3	—	—	1280-1440	1735.7-1952.6
1-1/4	—	31.75	—	—	—	—	—	—	1820-2000	2467.9-2712.0
1-3/8	—	34.93	—	—	1460-1680	1979.8-2278.1	—	—	2380-2720	3227.3-3688.3
1-1/2	—	38.10	—	—	1940-2200	2630.6-2983.2	—	—	3160-3560	4285.0-4827.4

Table D-2. Torque Limits for Wet Fasteners.

CAPSCREW HEAD MARKINGS

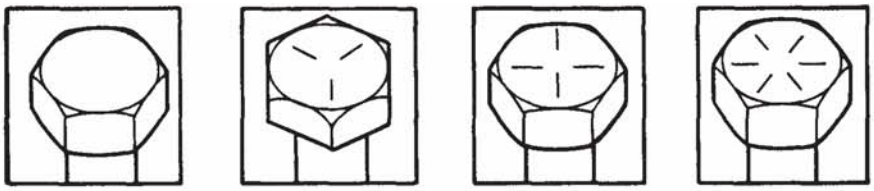

SIZE			TORQUE							
			SAE GRADE NO. 1 or 2		SAE GRADE NO. 5		SAE GRADE NO. 6 or 7		SAE GRADE NO. 8	
DIA. INCHES	THREADS PER INCH	DIA. MILLIMETERS	POUND FEET	NEWTON METERS	POUND FEET	NEWTON METERS	POUND FEET	NEWTON METERS	POUND FEET	NEWTON METERS
1/4	20	6.35	4.5	6.1	7.2	9.76	9.0	12.20	10.8	14.64
1/4	28	6.35	5.4	7.32	9.0	12.20	—	—	12.6	17.09
5/16	18	7.94	9.9	13.42	15.3	20.75	17.1	23.19	21.6	29.29
5/16	24	7.94	11.7	15.87	17.1	23.19	—	—	24.3	32.95
3/8	16	9.53	16.2	21.97	27.9	37.83	30.6	41.49	39.6	53.70
3/8	24	9.53	18.0	24.41	31.5	42.71	—	—	44.1	59.80
7/16	14	11.11	25.2	34.17	44.1	59.80	49.5	67.12	63.0	85.43
7/16	20	11.11	27.0	36.61	49.5	67.12	—	—	70.2	95.19
1/2	13	12.70	35.1	47.60	67.5	91.53	76.5	103.73	94.5	128.14
1/2	20	12.70	36.9	50.04	76.5	103.73	—	—	108.0	146.44
9/16	12	14.29	45.9	62.24	99.0	134.24	108.0	146.45	139.5	189.16
9/16	18	14.29	49.5	67.12	108.0	146.45	—	—	153.0	207.47
5/8	11	15.88	56.7	76.89	135.0	183.06	150.3	203.81	189.0	256.28
5/8	18	15.88	85.5	115.94	153.0	207.47	—	—	216.0	292.90
3/4	10	19.05	94.5	128.14	243.0	329.51	252.0	341.71	337.5	457.65
3/4	16	19.05	103.5	140.35	265.5	360.02	—	—	378.0	512.57
7/8	9	22.23	144.0	195.26	355.5	482.06	396.0	536.98	544.5	738.34
7/8	14	22.23	157.5	213.57	391.5	530.87	—	—	607.5	823.77
1	8	25.40	211.5	286.79	531.0	720.04	594.0	805.46	819.0	1110.56
1	14	25.40	225.0	305.10	594.0	805.46	—	—	891.0	1208.20
1-1/8	—	28.58	—	—	720.0-792.0	976.32-1073.95	—	—	1152.0-1296.0	1562.11-1757.38
1-1/4	—	31.75	—	—	—	—	—	—	1637.99-1800.00	2221.11-2440.80
1-3/8	—	34.93	—	—	1314.0-1512.0	1781.78-2050.27	—	—	2142.0-2448.0	2904.55-3319.49
1-1/2	—	38.10	—	—	1746.0-1980.0	2367.58-2684.88	—	—	2844.0-3204.0	3856.5-4344.62

APPENDIX D (Contd)

Tubing Application Tightening Assembly Instructions

Slide tubing over barbed insert until it bottoms on fitting.

MINI-BARB

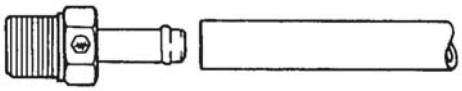

---

1. Slide nut and then sleeve on tubing.
2. Slide I.D. of tubing onto fitting insert until it bottoms.
3. Assemble nut to fitting body.
4. Tighten assembly finger tight to cover body threads.

KNURL-ON

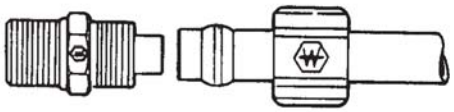

---

1. Slide nut and then sleeve on tubing.
2. Slide I.D. of tubing onto fitting insert until it bottoms.
3. Assemble nut to fitting body.
4. Finger tighten nut. From that point, tighten with a wrench two complete turns.

SELF-ALINE-PTF

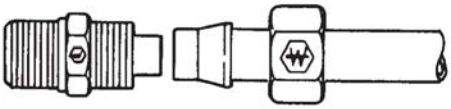

---

1. Cut tubing to desired length. Ensure ends are cut reasonably square.
2. Slide tubing into the preassembled fitting and push until tube bottoms.
3. Tighten nut as indicated in chart. Another check on proper assembly is dimension "A," when nut is fully tightened.

NYLON TUBING
FOR AIRBRAKE

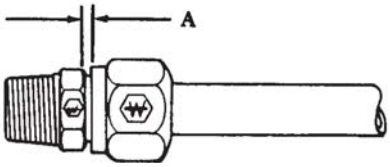

DISASSEMBLY - Remove nut and pull tubing out of fitting body. Insert will remain on tubing.

REASSEMBLY - Push tubing and insert into fitting body until it bottoms. Thread nut onto fitting body and tighten as in step 3.

TUBE O.D.	TIGHTEN NUT TO:	A
1/4	85 - 115 lb-in. (9.6 - 13.0 N·m)	.085/.105
3/8	12 - 17 lb-ft (16.3 - 23.1 N·m)	.125/.145
1/2	25 - 33 lb-ft (33.9 - 44.7 N·m)	.100/.120
5/8	26 - 35 lb-ft (35.3 - 47.5 N·m)	.115/.135
3/4	38 - 50 lb-ft (51.5 - 67.8 N·m)	.180/.200

APPENDIX D (Contd)

I%bing Application lightening Assembly Instructions (Contd)

1. Slide nut and then sleeve on tubing. Threaded end of nut (C) must face out.
2. Insert tubing into fitting. Ensure tubing is bottomed on fitting shoulder.
3. Thread nut onto fitting body until it is hand tight.
4. From that point, tighten with a wrench the number of turns indicated at right.

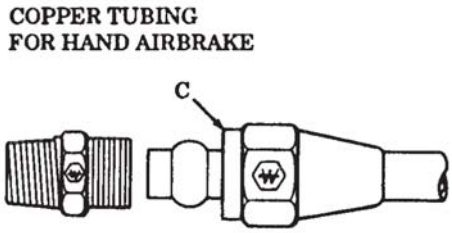

TUBE SIZE	ADDITIONAL NUMBER OF TURNS FROM HAND TIGHT
1/4, 3/8	1-3/4
1/2, 5/8, 3/4	3-1/4

D-4. TORQUE WRENCH ADAPTERS

Some tasks require the use of a torque wrench adapter when the nut or screw cannot be reached with a regular socket on the end of the torque wrench. These adapters add to the overall length of the torque wrench and make the dial or scale reading less than the actual torque applied to the nut or screw. To prevent overtorquing and damage to equipment, calculate correct dial or scale reading using Conversion Formula (para. D-5).

APPENDIX D (Contd)

D-5. CONVERSION FORMULA

Corrected dial or scale readings are determined by the use of the following formula:

$$\text{Corrected reading} = \text{Required torque value} \div \frac{\text{Length of torque wrench} + \text{Length of adapter}}{\text{Length of torque wrench}}$$

NOTE

The length of the torque wrench is measured from the center of the handle to the center of the drive. The length of the adapter is measured from the center of the drive to the center of the wrench.

Example:

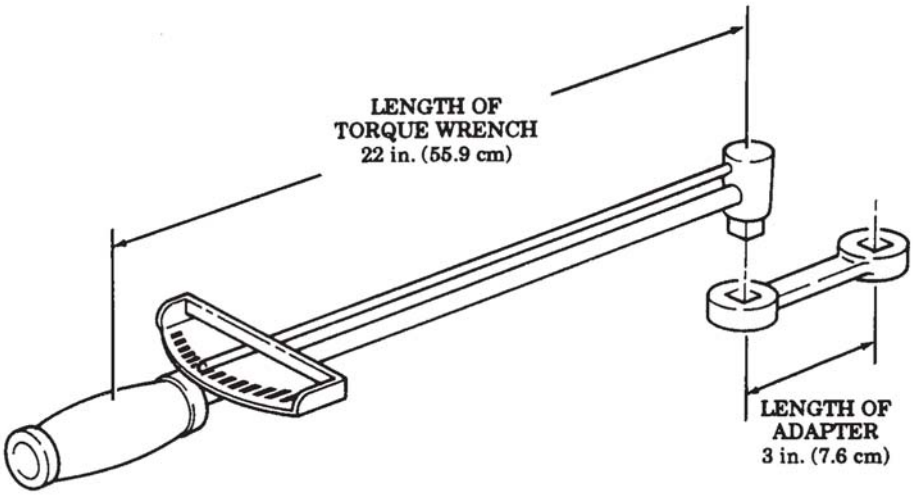

In this example, the torque wrench measures 22 in. (55.9 cm) and the adapter is 3 in. (7.6 cm). The required torque is 19 lb-ft. (25.8 N·m).

$$\text{Corrected reading} = 19 \text{ lb-ft } (25.8 \text{ N·m}) \div \frac{22 \text{ in. } (55.9 \text{ cm}) + 3 \text{ in. } (7.6 \text{ cm})}{22 \text{ in. } (55.9 \text{ cm})}$$

$$\text{Corrected reading} = 19 \text{ lb-ft } (25.8 \text{ N·m}) \div \frac{25 \text{ in. } (63.5 \text{ cm})}{22 \text{ in. } (55.9 \text{ cm})}$$

$$\text{Corrected reading} = 19 \text{ lb-ft } (25.8 \text{ N·m}) \div 1.14$$

$$\text{Corrected reading} = 17 \text{ lb-fl } (23.1 \text{ N.m})$$

APPENDIX E
SCHEMATIC AND WIRING DIAGRAM

TITLE	PAGE NO.
Foldout 1. Electrical System Wiring Diagram	FP-1
Foldout 2. Air-Hydraulic Brake System Diagram	FP-3
Foldout 3. Air Accessory System Diagram (all except M818, M819)	FP-5
Foldout 4. Air Accessory System and Semitrailer Brake System Diagram (M818, M819)	FP-7

INDEX

Para Page

A

Absorber replacement, shock:
Installation 7-19b 7-44
Removal 7-19a 7-44
Accelerator control linkage maintenance:
Adjustment 3-37c 3-70
Installation 3-37b 3-70
Removal 3-37a 3-70
Accelerator pedal, bracket, rod, and stopscrew replacement:
Installation 3-36b 3-68
Removal 3-36a 3-68
Accelerator system maintenance index 3-35 3-68
Access cover replacement, cab door:
Installation 11-12b 11-28
Removal 11-12a 11-28
Access door maintenance, bonnet:
Assembly 12-44d 12-92
Cleaning and inspection 12-44c 12-90
Disassembly 12-44b 12-90
Installation 12-44e 12-92
Removal 12-44a 12-89
Accessory items maintenance index 11-36 11-67
Accessory switch replacement, battery, ignition, and:
Installation 4-17b 4-39
Removal 4-17a 4-39
Adjustment, wheel bearing 9-6 9-20
A-Frame kit maintenance:
Inspection 14-31b 14-60
Installation 14-31c 14-60
Removal 14-31a 14-58
Airbrake chamber replacement, rear winch:
Installation 13-22b 13-52
Removal 13-22a 13-52
Airbrake hand control valve replacement:
Installation 8-23b 8-48
Removal 8-23a 8-48
Air cleaner assembly replacement:
Installation 3-15b 3-24
Removal 3-15a 3-24
Air cleaner element maintenance:
Cleaning with compressed air.. 3-17b 3-26
Cleaning with detergent 3-17c 3-26
Emergency cleaning 3-17d 3-27
Installation 3-17e 3-27
Removal 3-17a 3-26
Air cleaner hoses replacement:
Installation 3-16b 3-25
Removal 3-16a 3-25
Air cleaner indicator maintenance:
Cleaning and inspection 3-18c 3-30
Installation 3-18d 3-30
Removal 3-18b 3-28
Testing 3-18a 3-28
Air compressor governor maintenance:
Check and adjustment 8-25c 8-56
Installation 8-25b 8-54
Removal 8-25a 8-54
Air conditioner drain tube replacement:
Installation 12-43b 12-88
Removal 12-43a 12-88
Air couplings replacement:
Front air couplings installation 8-22b 8-43
Front air couplings removal 8-22a 8-42
Rear air couplings installation (except M813, M813A1, M815, M819) 8-22f 8-46
Rear air couplings installation (M813, M813A1, M815, M819) 8-22d 8-44
Rear air couplings removal (except M813, M813A1, M815, M819) 8-22e 8-46
Rear air couplings removal (M813, M813A1, M815, M819). . 8-22c 8-44
Air gage and oil pressure gage replacement:
Installation 4-9b 4-22
Removal 4-9a 4-22
Air-hydraulic cylinder replacement
Installation 8-14b 8-28
Removal 8-14a 8-26
Air intake system maintenance index 3-14 3-23
Air pack reservoir replacement:
Installation 8-24b 8-52
Removal 8-24a 8-50
Air pressure indicator switch replacement, low:
Installation 4-26b 4-50
Removal 4-26a 4-50
Air supply valve replacement
Installation 8-20b 8-39
Removal 8-20a 8-38
Alcohol evaporator replacement:
Installation 14-24b 14-48
Removal 14-24a 14-48

INDEX (Contd)

	Para	Page
Alternator (100-amp) cable and harness replacement:		
Installation	14-42b	14-80
Removal	14-42a	14-80
Alternator (100-amp) kit maintenance index	14-40	14-78
Alternator (100-amp) replacement:		
Installation	14-41b	14-78
Removal	14-41a	14-78
Alternator (60 Ampere) and mounting brackets maintenance:		
Adjustment	4-2c	4-4
Installation	4-2b	4-4
Removal	42a	4-2
Alternator drivebelts maintenance:		
Adjustment	4-4d	4-9
Inspection	4-4b	4-8
Installation	4-4c	4-8
Removal	4-4a	4-8
Altematorpulley replacement:		
Installation	4-3b	4-6
Removal	4-3a	4-6
Alternator regulator (100-amp) replacement:		
Installation	14-43b	14-82
Removal	14-43a	14-82
Anchor brackets replacement, chock:		
Flank chock anchor bracket installation	10-8f	10-10
Flank chock anchor bracket removal	10-8e	10-10
Front chock anchor bracket installation	10-8b	10-10
Front chock anchor bracket removal	10-8a	10-10
Rear chock anchor bracket installation	10-8d	10-10
Rear chock anchor bracket removal	10-8c	10-10
AOAP maintenance, engine...	3-10	3-14
Appendix A, references		A-1
Appendix B, maintenance allocation chart		B-1
Appendix C, expendable/durable supplies and materials list		C-1
Appendix D, torque limits		D-1
Appendix E,schematic and wiring diagrams		E-1
Arm, glass, and handle replacement, windshield:		
Arm installation	11-27f	11-51
Arm removal	11-27a	11-50
Glass installation	11-27e	11-50
Glass removal	11-27b	11-50
Handle installation	11-27d	11-50
Handle removal	11-27c	11-50
Arm replacement, pitman:		
Installation	9-11b	9-30
Removal	9-11a	9-30
Army materiel, destruction of to prevent enemy use...	1-3	1-1
Assist cylinder and socket maintenance, power steering		
Assembly	9-10c	9-28
Disassembly	9-10b	9-27
Installation	9-10d	9-28
On-vehicle adjustment	9-10e	9-28
Removal	9-10a	9-26
Autobrake maintenance (M816, M819), hoist winch:		
Adjustment	13-43b	13-98
Installation	13-43c	13-98
Removal	13-43a	13-98
Automatic brake test and adjustment:		
Adjustment	13-3b	13-6
Testing	13-3a	13-4
Auxiliary power receptacle and socket replacement:		
Installation	4-22b	4-44
Removal	4-22a	4-44
Axle shaft flange replacement, front:		
Cleaning and inspection	7-9b	7-16
Installation	7-9c	7-16
Removal	7-9a	7-16
Axle shaft maintenance, rear:		
Cleaning and inspection	7-12b	7-24
Installation	7-12c	7-24
Removal	7-12a	7-24

B

	Para	Page
Battery and battery box maintenance:		
Batteries and battery box installation	4-49c	4-102
Batteries and battery box removal	4-49a	4-102
Battery and battery box servicing	4-49b	4-102
Battery box maintenance, battery and:		
Batteries and battery box installation	4-49c	4-102

INDEX (Contd)

	Para	Page
Batteries and battery box removal	4-49a	4-102
Battery and battery box servicing	4-49b	4-102
Battery box supports replacement:		
Installation	4-50b	4-104
Removal	4-50a	4-104
Battery cables and clamps replacement:		
Accessory cable installation	4-48f	4-96
Accessory cable removal	4-48e	4-94
Battery-to-battery cable installation	4-48i	4-100
Battery-to-battery cable removal	4-48b	4-91
Ground and negative cable installation	4-48h	4-98
Ground and negative cable removal	4-48c	4-92
Ground cable connection	4-48j	4-100
Ground cable disconnection	4-48a	4-91
Positive cable installation	4-48g	4-96
Positive cable removal	4-48d	4-94
Battery, ignition, and accessory switch replacement:		
Installation	4-17b	4-39
Removal	4-17a	4-39
Battery system maintenance index	4-47	4-90
Bearing replacement, center:		
Installation	7-6b	7-12
Removal	7-6a	7-12
Blackout and emergency lamps replacement:		
Installation	12-41b	12-86
Removal	12-41a	12-86
Blackout drive lamp and housing replacement:		
Blackout drive lamp installation	4-41d	4-74
Blackout drive lamp removal	4-41a	4-74
Blackout drive light housing installation	4-41c	4-74
Blackout drive light housing removal	4-41b	4-74
Bkackout panel replacement, window:		
Installation	12-20b	12-36
Removal	12-20a	12-36
Blackout plungers replacement, hinged roof:		
Installation	12-39b	12-82
Removal	12-39a	12-82
Blackout switch replacement:		
Installation	12-29b	12-57
Removal	12-29a	12-57
Blackout switch replacement, rear door:		
Installation	12-28b	12-56
Removal	12-28a	12-56
Blade replacement, fan:		
Installation	3-53b	3-101
Removal	3-53a	3-101
Bleeding service brake system:		
Manual method	8-15b	8-34
Pressure bleeding method	8-15a	8-30
Body and cab maintenance index	11-1	11-1
Body step replacement, tractor wrecker:		
Installation	12-62b	12-119
Removal	12-62a	12-119
Bolster body maintenance index	12-64	12-122
Bolster midwinch drivechain and sprockets maintenance:		
Cleaning and inspection	13-13c	13-30
Drivechain adjustment	13-13f	13-32
Drivechain installation	13-13e	13-32
Drivechain removal	13-13a	13-30
Sprockets installation	13-13d	13-32
Sprockets removal	13-13b	13-30
Bolster midwinch propeller shaft replacement:		
Installation	13-14b	13-34
Removal	13-14a	13-34
Bolster midwinch replacement:		
Installation	13-12b	13-28
Removal	13-12a	13-28
Bolster pioneer tool kit bracket replacement:		
Installation	12-66b	12-124
Removal	12-66a	12-124
Bolster replacement		
Installation	12-69b	12-128
Removal	12-69a	12-128
Bonnet access door maintenance:		
Assembly	12-44d	12-92
Cleaning and inspection	12-44c	12-90
Disassembly	12-44b	12-90
Installation	12-44e	12-92
Removal	12-44a	12-89
Bonnet control rod replacement:		
Installation	12-38b	12-80
Removal	12-38a	12-80

INDEX (Contd)

	Para	Page
Boom support replacement (M816, M819), wrecker:		
Installation	13-38b	13-88
Removal	13-38a	13-88
Box supports replacement, battery:		
Installation	4-50b	4-104
Removal	4-50a	4-104
Bracket maintenance, exhaust muffler		
Adjustment	3-43c	3-83
Installation	3-43b	3-82
Removal	3-43a	3-82
Brackets replacement, fuel can:		
Installation	12-54b	12-111
Removal	12-54a	12-111
Bracket replacement, taillight:		
Installation	12-51b	12-106
Removal	12-51a	12-106
Brackets replacement, radiator and mounting:		
Installation	3-50b	3-96
Removal	3-50a	3-96
Brackets replacement, surge tank and mounting:		
Installation	3-48b	3-92
Removal	3-48a	3-92
Brake adjustment, service	8-9	8-16
Brake cable replacement, parking:		
Installation	8-3b	8-4
Removal	8-3a	8-4
Brake couplings replacement, trailer:		
Installation	8-26b	8-58
Removal	8-26a	8-58
Brakedrum replacement, parking:		
Installation	8-6b	8-12
Removal	8-6a	8-12
Brake lever replacement, parking:		
Installation	8-2b	8-2
Removal	8-2a	8-2
Brake lock switch replacement:		
Installation	4-27b	4-52
Removal	4-27a	4-52
Brake pedal adjustment:		
Adjustment	8-17b	8-37
Test	8-17a	8-37
Brake pedal replacement:		
Installation	8-16b	8-36
Removal	8-16a	8-36
Brakeshoe adjustment, parking	8-5	8-10
Brakeshoe maintenance, parking:		
Assembly	8-4d	8-8
Cleaning and inspection	8-4c	8-8
Disassembly	8-4b	8-6
Installation	8-4e	8-8
Removal	8-4a	8-6
Brakeshoe maintenance, service:		
Cleaning and inspection	8-8b	8-14
Installation	8-8c	8-15
Removal	8-8a	8-14
Brake system operation, compressed air and air-hydraulic	1-21	1-62
Brake test and adjustment, automatic:		
Adjustment	13-3b	13-6
Testing	13-3a	13-4
Brake test and adjustment, drag:		
Adjustment	13-4b	13-8
Testing	13-4a	13-8
Breaker replacement, circuit:		
Installation	4-20b	4-42
Removal	4-20a	4-42
Breather maintenance, crankcase:		
Cleaning	3-4b	3-4
Installation	3-4c	3-4
Removal	3-4a	3-4
Breather maintenance, front and rear axle:		
Cleaning and inspection	7-13b	7-26
Installation	7-13c	7-26
Removal	7-13a	7-26
Breather maintenance, transfer case:		
Cleaning	6-5b	6-7
Installation	6-5c	6-7
Removal	6-5a	6-7
Breather maintenance, transmission:		
Cleaning	5-2b	5-2
Installation	5-2c	5-2
Removal	5-2a	5-2
Brushguard and stoneguard replacement:		
Installation	11-5b	11-7
Removal	11-5a	11-7
Brushguard replacement, window:		
Installation	12-19b	12-35
Removal	12-19a	12-35
Bumperette replacement, rear:		
Installation	10-3b	10-3
Removal	10-3a	10-3

INDEX (Contd)

	Para	Page
Bumper replacement, front:		
Installation	10-7b	10-8
Removal	10-7a	10-8
Bumper step replacement, front:		
Installation	10-6b	10-7
Removal	10-6a	10-7
Buzzer replacement, low air pressure:		
Installation	4-23b	4-46
Removal	4-23a	4-46

C

	Para	Page
Cab cowl vent maintenance:		
Inspection	11-21b	11-42
Installation	11-21c	11-42
Removal	11-21a	11-42
Cab door access cover replacement:		
Installation	11-12b	11-28
Removal	11-12a	11-28
Cab door and hinges replacement:		
Cab door hinges installation	11-16c	11-32
Cab door hinges removal	11-16b	11-32
Cab door installation	11-16d	11-32
Cab door removal	11-16a	11-32
Cab door catch replacement:		
Installation	11-14b	11-30
Removal	11-14a	11-30
Cab door check rod replacement:		
Installation	11-22b	11-44
Removal	11-22a	11-44
Cab door dovetail wedge replacement:		
Installation	11-13b	11-29
Removal	11-13a	11-29
Cab door glass and weatherseal maintenance:		
Cab door glass adjustment	11-17c	11-34
Installation	11-17b	11-34
Removal	11-17a	11-34
Cab door handles and lock replacement:		
Cab door lock installation	11-19d	11-38
Cab door lock removal	11-19c	11-38
Inside door handle installation	11-19e	11-38
Inside door handle removal	11-19b	11-38
Outside door handle installation	11-19f	11-38
Outside door handle removal	11-19a	11-38
Cab door weatherseals replacement:		
Head weatherseal installation	11-20e	11-40
Head weatherseal removal	11-20b	11-40
Pillar post weatherseals installation	11-20d	11-40
Pillar post weatherseals removal	11-20c	11-40
Weatherseals installation	11-20f	11-40
Weatherseals removal	11-20a	11-40
Cab door window regulator and handle replacement:		
Window regulator handle installation	11-18d	11-36
Window regulator handle removal	11-18a	11-36
Window regulator installation	11-18c	11-36
Window regulator removal	11-18b	11-36
Cab handles replacement:		
Installation	11-15b	11-31
Removal	11-15a	11-31
Cab protector maintenance:		
Assembly	12-68d	12-127
Cleaning and inspection	12-68c	12-126
Disassembly	12-68b	12-126
Installation	12-68e	12-127
Removal	12-68a	12-126
Cab reinforcement panel replacement:		
Installation	11-23b	11-45
Removal	11-23a	11-45
Cab soft top turnbuttons and lashing hooks replacement:		
Lashing hook installation	11-35c	11-66
Lashing hook removal	11-35b	11-66
Turnbutton and snap shank installation	11-35d	11-66
Turnbutton and snap shank removal	11-35a	11-66
Cab tunnels replacement:		
Rear tunnel installation	11-30e	11-56
Rear tunnel removal	11-30b	11-56
Toeboard installation	11-30d	11-56
Toeboard r emoval	11-30c	11-56
Tunnel installation	11-30f	11-56
Tunnel removal	11-30a	11-56
Cable and harness replacement, alternator (100-amp):		
Installation	14-42b	14-80
Removal	14-42a	14-80
Cable, chain, and hook maintenance, winch:		
Cleaning and inspection	13-5b	13-12
Installation	13-5c	13-12
Removal	13-5a	13-10

INDEX (Contd)

	Para	Page
Cable maintenance, emergency stop and throttle control:		
Inspection	3-38b	3-72
Installation	3-38c	3-72
Removal	3-38a	3-72
Cable roller replacement, wrecker rear winch:		
Installation	13-21b	13-50
Removal	13-21a	13-50
Cables and clamps replacement, battery:		
Accessory cable installation	4-48f	4-96
Accessory cable removal	4-48e	4-94
Battery-to-battery cable installation	4-48i	4-100
Battery-to-battery cable removal	4-48b	4-91
Ground and negative cable installation	448h	4-98
Ground and negative cable removal	4-48c	4-92
Ground cable connection	4-48j	4-100
Ground cable disconnection	4-48a	4-91
Positive cable installation	4-48g	4-96
Positive cable removal	4-48d	4-94
Cable tensioner replacement, front winch:		
Installation	13-11b	13-26
Removal	13-11a	13-26
Cable tensioner replacement, rear winch:		
Installation	13-24b	13-56
Removal	13-24a	13-56
Cable tensioner valve replacement, rear winch:		
Installation	13-20b	13-48
Removal	13-20a	13-48
Cargo body maintenance index	12-1	12-1
Cargo front rack maintenance:		
Assembl y	12-3c	12-6
Disassembly	12-3a	12-6
Inspection	12-3b	12-6
Cargo gate rack maintenance:		
Assembly	12-4c	12-8
Disassembly	12-4a	12-8
Inspection	12-4b	12-8
Cargo pioneertool kit bracket and toolbox replacement:		
Pioneer toolkit bracket installation	12-9d	12-18
Pioneer toolkit bracket removal	12-9a	12-18
Toolbox installation	12-9c	12-18
Toolbox removal	12-9b	12-18
Cargo side rack and troop seat maintenance:		
Cargo rack assembly	12-2f	12-4
Cargo rack disassembly	12-2b	12-2
Inspection	12-2d	12-2
Troop seat assembly	12-2e	12-4
Troop seat disassembly	12-2c	12-2
Troop seat installation	12-2g	12-4
Troop seat removal	12-2a	12-2
Cargo spare tire carrier replacement (M813, M813A1):		
Installation	12-10b	12-20
Removal	12-10a	12-20
Cargo spare tire carrier replacement (M814):		
Installation	12-8b	12-16
Removal	12-8a	12-16
Cargo tailgate replacement (M813A1):		
Installation	12-7b	12-14
Removal	12-7a	12-14
Cargo tailgate replacement (M813, M814):		
Installation	12-6b	12-12
Removal	12-6a	12-12
Carrier replacement, trailer:		
Installation	12-67b	12-125
Removal	12-67a	12-125
Catch replacement, cabdoor:		
Installation	11-14b	11-30
Removal	11-14a	11-30
Ceiling light fixtures maintenance:		
Ceiling light fixture installation	12-45f	12-97
Ceiling light fixture removal	12-45b	12-94
Fluorescent light fixture assembly	12-45d	12-96
Fluorescent light fixture disassembly	12-45c	12-96
Fluorescent light ftiure installation	12-45e	12-96
Fluorescent light fixture removal	12-45a	12-94
Ceiling, wall switches, and receptacles replacement:		
Installation	12-35b	12-74
Removal	12-35a	12-74
Center bearing replacement:		
Installation	7-6b	7-12
Removal	7-6a	7-12
Characteristics, capabilities, and features, equipment	1-10	1-4
Charging system maintenance index	4-1	4-1

INDEX (Contd)

	Para	Page
Check and adjustment, toe-in:		
Toe-in ad justment	9-8b	9-22
Toe-in check	9-8a	9-22
Check rod replacement, cab door:		
Installation	11-22b	11-44
Removal	11-22a	11-44
Chock anchor brackets replacement:		
Flank chock anchor bracket installation	10-8f	10-10
Flank chock anchor bracket removal	10-8e	10-10
Front chock anchor bracket installation	10-8b	10-10
Front chock anchor bracket removal	10-8a	10-10
Rear chock anchor bracket installation	10-8d	10-10
Rear chock anchor bracket removal	10-8c	10-10
Circuit breaker replacement		
Installatio n	4-20b	4-42
Removal	4-20a	4-42
Cleaner assembly replacement, air:		
Installation	3-15b	3-24
Removal	3-15a	3-24
Clearance light replacement, side marker and:		
Installation	4-44b	4-80
Removal	4-44a	4-80
Cluster maintenance, instrument		
Assembly	4-7c	4-16
Disassembly	4-7b	4-16
Installation	4-7d	4-16
Removal	4-7a	4-14
Clutch control lever replacement, engine:		
Installation	13-19b	13-46
Removal	13-19a	13-46
Clutch control linkage replacement:		
Installation	3-13b	3-20
Removal	3-13a	3-19
Clutch pedal maintenance:		
Adjustment	3-12c	3-18
Installation	3-12b	3-16
Removal	3-12a	3-16
Clutch system maintenance index	3-11	3-16
Cold start indicator and lamp replacement		
Installation	3-32b	3-64
Removal	3-32a	3-64
Cold start relay replacement:		
Installation	3-34b	3-67
Removal	3-34a	3-67
Cold start resistor replacement:		
Installation	3-33b	3-66
Removal	3-33a	3-66
Column replacement, steering:		
Installation	9-15b	9-38
Removal	9-15a	9-38
Common tools and equipment	2-1	2-1
Companion seat maintenance:		
Companion seat backrest installation	11-31h	11-60
Companion seat backrest removal	11-31a	11-58
Companion seat cushion installation	11-31g	11-60
Companion seat cushion removal	11-31b	11-58
Companion seat installation	11-31f	11-60
Companion seat removal	11-31c	11-58
Frame assembly	11-31e	11-60
Frame disassembly	11-31d	11-58
Compartment replacement, glove:		
Installation	11-33b	11-63
Removal	11-33a	11-63
Composite lamps, housing, and bracket replacement, front:		
Composite lamps installation	4-40d	4-72
Composite lamps removal	4-40a	4-72
Composite light housing installation	4-40c	4-72
Composite light housing removal	4-40b	4-72
Composite light housing and bracket replacement, rear:		
Installation (M813, M813A1, M814)	4-45f	4-85
Installation (M815)	4-45l	4-88
Installation (M816)	4-45j	4-87
Installation (M817)	4-45d	4-84
Installation (M818, M820, M820A1, M820A2)	4-45b	4-82
Installation (M819)	4-45h	4-86
Removal (M813, M813A1, M814)	4-45e	4-85
Removal (M815)	4-45k	4-88
Removal (M816)	4-45i	4-87
Removal (M817)	4-45c	4-84
Removal (M818, M820, M820A1, M820A2)	4-45a	4-82
Removal (M819)	4-45g	4-86

INDEX (Contd)

	Para	Page
Composite light lamp replacement, rear:		
Installation	4-46b	4-89
Removal	4-46a	4-89
Compressed air and air-hydraulic brake system operation	1-21	1-62
Compressed air and air-hydraulic brake system troubleshooting:		
Compressed air and brake system troubleshooting (table 2-3)		2-90
General	2-13	2-88
Symptom index, compressed air and brake system troubleshooting		2-89
Compressed air and brake system maintenance:		
General	8-18	8-38
Index	8-19	8-38
Contact brush replacement, horn:		
Installation	4-31b	4-58
Removal	4-31a	4-58
Control and indicator lamp replacement, turn signal:		
Installation	4-33b	4-61
Removal	4-33a	4-61
Control box and bracket replacement, protective:		
Installation	4-36b	4-64
Removal	4-36a	4-64
Control box maintenance, dump hoist:		
Assembly	13-26d	13-64
Cleaning and inspection	13-26c	13-64
Disassembly	13-26b	13-64
Installation	13-26e	13-66
Removal	13-26a	13-62
Control box replacement, personnel heater:		
Installation	14-5b	14-8
Removal	14-5a	14-8
Control cables replacement, personnel heater:		
Installation	14-12b	14-22
Removal	14-12a	14-22
Control lever and linkage replacement, power divider		
Installation	13-55b	13-124
Removal	13-55a	13-124
Control linkage maintenance, accelerator:		
Adjustment	3-37c	3-70
Installation	3-37b	3-70
Removal	3-37a	3-70
Control linkage maintenance, dump:		
Inspection	13-28b	13-70
Installation	13-28c	13-70
Removal	13-28a	13-70
Control linkage maintenance, transfer case shift lever and:		
Adjustment	6-4c	6-6
Installation	6-4b	6-4
Removal	6-4a	6-4
Control linkage maintenance (M815, M819 W/W), transfer PTO:		
Inspection	13-62b	13-138
Installation	13-62c	13-138
Removal	13-62a	13-138
Control linkage maintenance (M820A2 WO/W), transmission PTO:		
Assembly	13-63d	13-142
Disassembly	13-63b	13-140
Inspection	13-63c	13-140
Installation	13-63e	13-142
Removal	13-63a	13-140
Control linkage maintenance, van liftgate:		
Assembly	13-51d	13-118
Disassemble	13-51b	13-118
Inspection	13-51c	13-118
Installation	13-51e	13-118
Removal	13-51a	13-118
Control linkage replacement, clutch:		
Installation	3-13b	3-20
Removal	3-13a	3-19
Control rod replacement, bonnet:		
Installation	12-38b	12-80
Removal	12-38a	12-80
Controls maintenance, rear winch:		
Adjustment	13-18d	13-44
Inspection	13-18b	13-44
Installation	13-18c	13-44
Removal	13-18a	13-44
Controls replacement, dump:		
Installation	13-27b	13-68
Removal	13-27a	13-68
Control switch, resistor, and leads replacement:		
Installation	14-13b	14-24
Removal	14-13a	14-24
Control systems operation	1-18	1-36

INDEX (Contd)

	Para	Page
Control valve replacement, tractor wrecker:		
Installation	13-44b	13-103
Removal	13-44a	13-100
Control valve replacement, van liftgate:		
Installatio n	13-52b	13-120
Removal	13-52a	13-120
Control valve replacement, wrecker:		
Installation	13-33b	13-80
Removal	13-33a	13-80
Convoy warning light harness replacement:		
Installation	14-54b	14-104
Removal	14-54a	14-104
Convoy warning light harness (M817) replacement:		
Installation	14-55b	14-106
Removal	14-55a	14-106
Convoy warning light harness (M820, M820A1, M820A2) replacement:		
Installation	14-56b	14-108
Remova l	14-56a	14-108
Convoy warning light kit maintenance index	14-50	14-96
Convoy warning light mount replacement:		
Installation	14-51b	14-98
Removal	14-51a	14-96
Convoy warning light mount (M817) replacement:		
Installation	14-53b	14-102
Removal	14-53a	14-102
Convoy warning light mount (M820, M820A1, M820A2) replacement:		
Installation	14-52b	14-100
Removal	14-52a	14-100
Convoy warning light replacement:		
Installation	14-58b	14-112
Removal	14-58a	14-112
Convoy warning light resistor and leads replacement:		
Installation	14-57b	14-110
Removal	14-57a	14-110
Convoy warning light switch replacement:		
Installation.	14-59b	14-114
Removal	14-59a	14-114
Coolant battery box heater pad replacement, engine:		
Installation	14-17b	14-35
Removal	14-17a	14-35
Coolant heater and mounting bracket replacement, engine:		
Installation	14-14b	14-28
Removal	14-14a	14-26
Coolant heater harness replacement, engine:		
Installation	14-18b	14-36
Removal	14-18a	14-36
Coolant heater hoses replacement, engine:		
Installation	14-16b	14-34
Removal	14-16a	14-32
Coolant heater pump and mounting bracket replacement:		
Installation	14-15b	14-30
Removal	14-15a	14-30
Cooling system hoses replacement:		
Engine oil cooler hose installation	3-46d	3-88
Engine oil cooler hose removal	3-46c	3-88
Radiator inlet hose and outlet hose installation	3-46e	3-88
Radiator inlet hose and outlet hose removal	3-46b	3-88
Radiator vent hose and manifold return hose installation	3-46f	3-89
Radiator vent hose and manifold return hose removal	3-46a	3-88
Cooling system maintenance index	3-44	3-84
Cooling system servicing		
Cleaning and flushing system	3-45c	3-86
Depressurizing system	3-45a	3-84
Draining system	3-45b	3-85
Filling system	3-45d	3-86
Core maintenance, speedometer flexible driveshaft and:		
Inspection	4-13b	4-34
Installation	4-13c	4-34
Removal	4-13a	4-32
Core maintenance, tachometer flexible driveshaft and:		
Inspection	4-12b	4-30
Installation	4-12c	4-30
Removal	4-12a	4-28
Counterbalance cable replacement, hinged roof and floor:		
Installation	12-23b	12-42
Removal	12-23a	12-42

INDEX (Contd)

	Para	Page
Couplings replacement, air:		
Front air couplings installation	8-22b	8-43
Front air couplings removal	8-22a	8-42
Rear air couplings installation (except M813, M813AI, M815, M819)	8-22f	8-46
Rear air couplings installation (M813, M813AI, M815, M819)	8-22d	8-44
Rear air couplings removal (except M813, M813Al, M815, M819)	8-22e	8-46
Rear air couplings removal (M813, M813A1, M815, M819)	8-22c	8-44
Cowl vent maintenance, cab:		
Inspection	11-21b	11-42
Installation	11-21c	11-42
Removal	11-21a	11-42
Crankcase breather maintenance:		
Cleaning	3-4b	3-4
Installation	3-4c	3-4
Removal	3-4a	3-4
Cylinder replacement, air-hydraulic:		
Installation	8-14b	8-28
Removal	8-14a	8-26
Cylinder replacement, master:		
Installation	8-11b	8-20
Removal	8-11a	8-20
Cylinder tubes replacement, power steering gear-to-assist:		
Installation	9-19b	9-46
Removal	9-19a	9-46

D

Data plate replacement:		
Installation	11-44b	11-78
Removal	11-44a	11-78
Deckplate andapproach plate replacement:		
Approach plate installation	12-75d	12-136
Approach plate removal	12-75c	12-136
Deckplate installation	12-75b	12-135
Deckplate removal	12-75a	12-135
Deckplate replacement:		
Installation	12-56b	12-113
Removal	12-56a	12-113
Declutch piping replacement, transfer case:		
Installation	6-3b	6-2
Removal	6-3a	6-2
Decontamination mountingkit replacement:		
Installation	14-34b	14-68
Removal	14-34a	14-68
Deepwater fording hand control and cable replacement:		
Installation	14-27b	14-52
Removal	14-27a	14-52
Deepwater fording kit maintenance index	14-26	14-52
Deepwaterfording pressure relief valve replacement:		
Installation	14-29b	14-56
Removal	14-29a	14-56
Deepwater fording pressurization valve replacement:		
Installation	14-28b	14-54
Removal	14-28a	14-54
Deepwater fording snorkel replacement:		
Installation	14 -30b	14-57
Removal	14-30a	14-57
Destruction of Army materiel to prevent enemy use.....	1-3	1-1
Dipstickandtube replacement,oil:		
Installation	3-3b	3-2
Removal	3-3a	3-2
Door lock replacement, rear		
Installation	12-24b	12-44
Removal	12-24a	12-44
Door window replacement, rear:		
installation	12-21b	12-38
Removal	12-21a	12-38
Doublecheckvalve replacement:		
Installation	8-21b	8-41
Removal	8-21a	8-40
Dovetail wedge replacement, cab door		
Installation	11-13b	11-29
Removal	11-13a	11-29
Draft tube replacement, engine:		
Installation	3-7b	3-10
Removal	3-7a	3-10
Dragbraketest andadjustment		
Adjustment	13-4b	13-8
Testing	13-4a	13-8
Drag link replacement:		
Installation	9-12b	9-32
Removal	9-12a	9-32
Drain tube replacement, air conditioner:		
Installation	12-43b	12-88
Removal	12-43a	12-88

INDEX (Contd)

	Para	Page
Drive adapter replacement, speedomete~		
Installation	4-14b	4-36
Removal	4-14a	4-36
Drivebelt maintenance, water pump		
Adjustment	3-54d	3-102
Inspection	3-54b	3-102
Installation	3-54c	3-102
Removal	3-54a	3-102
Drivebelts maintenance, akematcm		
Mjustment	4-4d	4-9
Inspection	4-4b	4-8
Installation	4-4c	4-8
Removal	4-4a	4-8
Drivebelts maintenance, fan:		
Adjustment	3-52d	3-100
Inspection	3-52b	3-100
Installation	3-52c	3-100
Removal	3-52a	3-99
Drivebelts maintenance, power steering pump		
Adjustment	9-16d	9-40
Inspection	9-16b	9-40
Installation	9-16c	9-40
Removal	9-16a	9-40
Drivechain and sprockets maintenance, bolster midwinch:		
Cleaning and inspection	13-13c	13-30
Dnvechain adjustment	13-13f	13-32
DriveChain installation	13-13e	13-32
Drivechain removal	13-13a	13-30
Sprockets installation	13-13d	13-32
Sprockets removal	13-13b	13-30
Ih-ivechain and sprockets maintenance, rear winch:		
Adjustment	13-17f	13-43
Cleaning and inspection	13-17c	13-42
DriveChain installation	13-17e	13-43
Drivechain removal	13-17a	13-42
Sprockets installation	13-17d	13-42
Sprockets removal	13-17b	13-42
Drive lamp and housing replacement, blackouti		
Blackout drive lamp installatio n	4-41d	4-74
Blackout drive lamp removal	4-41a	4-74
Blackout drive light housing installation	4-41c	4-74
Blackout drive light housing removal	4-41b	4-74
Driver's seat cushion, backrest, frame, and seat adjuster replacement		
Adjuster installation	11-34e	11-64
Adjuster removal	11-34d	11-64
Backrest installation	11-34g	11-64
Backrest removal	11-34b	11-64
Cushion installation	11-34h	11-64
Cushion removal	11-34a	11-64
Frame installation	11-34f	11-64
Frame removal	11-34c	11-64
Driver's seat replacement:		
Installation	11-32b	11-62
Removal	11-32a	11-62
Driveshafl, housing maintenance, rear winch:		
Assembly	13-23d	13-55
Cleaning and inspection	13-23c	13-54
Disassembly	13-23b	13-54
Installation	13-23e	13-55
Removal	13-23a	13-54
Dump body maintenance index	12-11	12-21
Dump body pioneer tool kit bracket replacement:		
Installation	12-16b	12-32
Removal	12-16a	12-32
Dump body spare tire carrier replacement (M817):		
Installation	12-14b	12-28
Removal	12-14a	12-28
Dump body splash guard replacement:		
Installation	12-17b	12-33
Removal	12-17a	12-33
Dump body tailgate control linkage maintenance:		
Adjustment	12-13c	12-26
Installation	12-13b	12-26
Removal	12-13a	12-24
Dump body tailgate replacement:		
Installation	12-12b	12-22
Removal	12-12a	12-22
Dump body toolbox replacement:		
Installation	12-15b	12-30
Removal	12-15a	12-30
Dump control linkage maintenance:		
Inspection	13-28b	13-70
Installation	13-28c	13-70
Removal	13-28a	13-70
Dump controls replacement:		
Installation	13-27b	13-68
Removal	13-27a	13-68

INDEX (Contd)

	Para	Page
Dump hoist control box maintenance:		
Assembly	13-26d	13-64
Cleaning and inspection	13-26c	13-64
Disassembly	13-26b	13-64
Installation	13-26e	13-66
Removal	13-26a	13-62
Dump hoist pump propeller shaft maintenance:		
Cleaning and inspection	13-29b	13-72
Installation	13-29c	13-72
Removal	13-29a	13-72
Dump hoist safety latch maintenance:		
Assembly	13-25d	13-60
Cleaning and inspection	13-25c	13-60
Disassembly	13-25b	13-58
Installation	13-25e	13-60
Removal	13-25a	13-58
E		
Electrical gages replacement:		
Installation	4-10b	4-24
Removal	4-10a	4-24
Electrical systems operation	1-20	1-56
Electrical systems troubleshooting		
General	2-14	2-96
Symptom index, electrical troubleshooting		2-53
Test equipment	2-15	2-53
Element maintenance, air cleaner:		
Cleaning with compressed air	3-17b	3-26
Cleaning with detergent	3-17c	3-26
Emergency cleaning	3-17d	3-27
Installation	3-17e	3-27
Removal	3-17a	3-26
Emergency lamps replacement, blackout and:		
Installation	12-41b	12-86
Removal	12-41a	12-86
Emergency stop and throttle control cable maintenance:		
Inspection	3-38b	3-72
Installation	3-38c	3-72
Removal	3-38a	3-72
End maintenance, tie rod:		
Inspection	9-9b	9-24
Installation	9-9c	9-24
Removal	9-9a	9-24
Engine AOAP maintenance	3-10	3-14
Engine clutch control lever replacement:		
Installation	13-19b	13-46
Removal	13-19a	13-46
Engine coolant battery box heater pad replacement:		
Installation	14-17b	14-35
Removal	14-17a	14-35
Engine coolant heater and mounting bracket replacement:		
Installation	14-14b	14-28
Removal	14-14a	14-26
Engine coolant heater harness replacement:		
Installation	14-18b	14-36
Removal	14-18a	14-36
Engine coolant heater hoses replacement:		
Installation	14-16b	14-34
Removal	14-16a	14-32
Engine draft tube replacement:		
Installation	3-7b	3-10
Removal	3-7a	3-10
Engine oil filter and housing maintenance:		
Cleaning and inspection	3-5d	3-7
Filter installation	3-5f	3-7
Filter removal	3-5b	3-6
Oil drainage	3-5a	3-6
Oil filter housing assembly	3-5e	3-7
Oil filter housing disassembly	3-5c	3-6
Engine systems:		
Engine lubrication system maintenance index	3-2	3-1
General	3-1	3-1
Equipment description and data:		
Differences between models	1-14	1-32
Equipment, characteristics, capabilities, and features	1-10	1-4
General	1-8	1-3
Index	1-9	1-3
Location and description of major external components	1-11	1-10
Location and description of major internal components	1-12	1-12
Vehicle Performance data	1-15	1-33
Equipment improvement recommendations (EIR's), reporting	1-5	1-1
Equipment improvement report and maintenance digest (EIR MD)	1-6	1-2

INDEX (contd)

	Para	Page
Evaporator replacement, alcohol:		
Installation	14-24b	14-48
Removal	14-24a	14-48
Exhaust muffler bracket maintenance:		
Adjustment	3-43c	3-83
Installation	3-43b	3-82
Removal	3-43a	3-82
Exhaust muffler replacement:		
Installation	3-42b	3-80
Removal	3-42a	3-80
Exhaust replacement, van heater and:		
Installation	12-37b	12-78
Removal	12-37a	12-76
Exhaust system maintenance index	3-39	3-74
Exhaust tube replacement, oil pan shroud and:		
Installatio n	14-19b	14-38
Rmoval	14-19a	14-38
Exhaust tube replacement, personnel heater:		
Installation	14-6b	14-9
Removal	14-6a	14-9
Expanding and retracting mechanism lock replacement:		
Installatio n	12-36b	12-75
Removal...	12-36a	12-75
Expendabe/durable supplies and materials list, appendix C:		
Expendable/Durable supplies and materials list		C-2
Explanation of columns	C-2	C-1
Scope	C-1	C-1

F

	Para	Page
Fan blade replacement:		
Installation	3-53b	3-101
Removal	3-53a	3-101
Fan drivebelts maintenance:		
Adjustment	3-52d	3-100
Inspection	3-52b	3-100
Installation	3-52c	3-100
Removal	3-52a	3-99
Fan hub replacement:		
Installation	3-49b	3-94
Removal	3-49a	3-94
Fan shrouds replacement. radiator:		
Installation	3-51b	3-98
Removal	3-51a	3-98
Fasteners replacement, hood:		
Hood holddown fastener and bracket installation.	11-3f	11-5
Hood holddown fastener and bracket removal	11-3a	11-4
Hood support hook installation	11-3d	11-4
Hood support hook removal	11-3c	11-4
Safety latch installation.	11-3e	11-5
Safety latch removal	11-3b	11-4
Fender replacement, left:		
Installation	11-11b	11-24
Removal	11-11a	11-20
Fender replacement, right:		
Installation	11-10b	11-18
Removal	11-10a	11-18
Fifth wheel replacement (M815):		
Installation	10-12b	10-18
Removal	10-12a	10-18
Fifth wheel replacement (M818):		
Installation	10-13b	10-20
Removal	10-13a	10-20
Fifth wheel replacement (M819):		
Installation	10-14b	10-22
Removal	10-14a	10-22
Filter replacement (AFC), fuel pump:		
Installation	3-28b	3-54
Removal	3-28a	3-54
Filter replacement (VS, MVS), fuel pump:		
MVS pump filter installation	3-27d	3-52
MVS pump filter removal	3-27c	3-52
MVS pump filter installation	3-27b	3-52
MVS pump filter removal	3-27a	3-52
Fire extinguisher mounting kit replacement:		
Installation	14-36b	14-71
Removal	14-36a	14-71
Fixed seatbelt kit replacement:		
Companion seatbelt installation	14-45d	14-85
Companion seatbelt removal	14-45c	14-85
Driver's seatbelt installation	14-45b	14-84
Driver's seatbelt removal	14-45a	14-84
Flasher replacement, turn signal:		
Installation	4-32b	4-60
Removal	4-32a	4-60
Flex hose replacement, selector valve:		
Installation	3-21b	3-33
Removal	3-21a	3-33

INDEX (Contd)

	Para	Page
Flexible hose replacement, service brake:		
Installation	8-13b	8-24
Removal	8-13a	8-24
Floating seatbelt kit replacement:		
Companionseatbelt installation	14-46d	14-87
Companion seatbelt removal	14-46c	14-86
Driver's seatbelt installation	14-46b	14-86
Driver's seatbelt removal	14-46a	14-86
Floodlight housing and mount replacement:		
Installation	4-43b	4-78
Removal	4-43a	4-77
Floodlight lamp replacement:		
Lamp installation	4-42b	4-76
Lamp removal	4-42a	4-76
Floodlight switch andfuel selector switch replacement:		
Installation	4-18b	4-40
Removal	4-18a	4-40
Floodlight wiring harness replacement:		
Installation	4-53b	4-113
Removal	4-53a	4-110
Fluorescent lights replacement:		
Installation	12-42b	12-87
Removal	12-42a	12-87
Fluorescent starter replacement, thermostatic switch and:		
Electrical heater thermostat Installation	12-33f	12-71
Electrical heater thermostat removal	12-33e	12-71
Fluorescent starter installation	12-33b	12-68
Fluorescent starter removal	12-33a	12-68
Van heater thermostat installation	12-33d	12-70
Van heater thermostat removal	12-33c	12-70
Forms, records, and reports, maintenance	1-2	1-1
Frame maintenance index	10-1	10-1
Frontand rear axle breather maintenance:		
Cleaning andinspection	7-13b	7-26
Installation	7-13c	7-26
Removal	7-13a	7-26
Frontand rear axle maintenance index	7-7	7-13
Front and rear side marker lights replacement:		
Front side marker lights installation	14-39b	14-74
Frontside marker lights removal	14-39a	14-74
Rear side marker lights installation	14-39d	14-76
Rearside marker lights removal	14-39c	14-76
Front and rear suspension maintenance index	7-14	7-27
Front and side shields replacement, power steering assist cylinder:		
Installation	11-26b	11-48
Removal	11-26a	11-48
Front axle oil seal replacement:		
Installation	7-11b	7-22
Removal	7-11a	7-22
Frontaxle shaft and universal joint maintenance:		
Cleaning and inspection	7-10b	7-20
Installation	7-10c	7-20
Removal	7-10a	7-18
Frontaxleshaft flange maintenance:		
Cleaning and inspection	7-9b	7-16
Installation	7-9c	7-16
Removal	7-9a	7-16
Front bumper replacement:		
Installation	10-7b	10-8
Removal	10-7a	10-8
Front bumper step replacement:		
Installation	10-6b	10-7
Removal	10-6a	10-7
Front composite lamps replacement, housing and bracket:		
Composite lamps installation	4-40d	4-72
Composite lamps removal	4-40a	4-72
Composite lighthousing installation	4-40c	4-72
Composite lighthousing removal	4-40b	4-72
Fronthubanddrum maintenance:		
Cleaning andinspection	9-4b	9-12
Installation	9-4d	9-14
Lubrication	9-4c	9-14
Removal	9-4a	9-11
Front liftingshackle replacement:		
Installation	10-4b	10-4
Removal	10-4a	10-4

INDEX (Contd)

	Para	Page
Front rack maintenance, cargo:		
Assembly	12-3c	12-6
Disassembly	12-3a	12-6
Inspection	12-3b	12-6
Front splash guard replacement (tractor wrecker body):		
Installation	12-60b	12-116
Removal	12-60a	12-116
Front splash guard replacement (wrecker body):		
Installation	12-50b	12-104
Removal	12-50a	12-104
Front spring replacement:		
Installation	7-15b	7-30
Removal	7-15a	7-28
Front sump tube replacement:		
Installation	3-9b	3-13
Removal	3-9a	3-13
Front winch cable tensioner replacement:		
Installation	13-11b	13-26
Removal	13-11a	13-26
Front winch frame extension replacement:		
Installation	13-7b	13-16
Removal	13-7a	13-16
Front winch lever cover replacement, transmission gearshift lever, transfer shift lever, and:		
Installation	14-23b	14-47
Removal	14-23a	14-47
Front winch propeller shaft replacement:		
Installation	13-9b	13-22
Removal	13-9a	13-22
Front winch replacement:		
Installation	13-8b	13-20
Removal	13-8a	13-18
Front winch trolley replacement:		
Installation	13-10b	13-24
Removal	13-10a	13-24
Fuel burning personnel heater harness replacement:		
Installation	14-7b	14-10
Removal	14-7a	14-10
Fuel burning personnel heater replacement:		
Installation	14-2b	14-2
Removal	14-2a	14-2
Fuel can brackets replacement:		
Installation	12-54b	12-111
Removal	12-54a	12-111
Fuel filter/water separator maintenance:		
Cleaning and inspection	3-26d	3-50
Filter element installation	3-26f	3-50
Filter element removal	3-26b	3-48
Filter head installation	3-26e	3-50
Filter head removal	3-26c	3-48
Fuel drainage	3-26a	3-48
Fuel level sending unit replacement:		
Installation	4-24b	4-47
Removal	4-24a	4-47
Fuel pump filter replacement (AFC):		
Installation	3-28b	3-54
Removal	3-28a	3-54
Fuel pump filter replacement (VS, MVS):		
MVS pump filter installation	3-27d	3-52
MVS pump filter removal	3-27c	3-52
VS pump filter installation	3-27b	3-52
VS pump filter removal	3-27a	3-52
Fuel pump replacement, personnel heater:		
Installation	14-4b	14-6
Removal	14-4a	14-6
Fuel selector switch replacement, floodlight switch and:		
Installation	4-18b	4-40
Removal	4-18a	4-40
Fuel supply and return tubes replacement:		
Installation	3-23b	3-38
Removal	3-23a	3-36
Fuel system:		
General	3-19	3-32
Index, fuel system maintenance	3-20	3-32
Fuel tank maintenance:		
Assembly	3-24e	3-42
Cleaning and inspection	3-24d	3-42
Disassembly	3-24c	3-42
Draining	3-24a	3-40
Installation	3-24f	3-44
Removal	3-24b	3-40
Fuel tank straps and hangers maintenance:		
Inspection	3-25b	3-46
Installation	3-25c	3-46
Removal	3-25a	3-46

INDEX (Contd)

	Para	Page
G		
Gages replacement, electrical:		
Installation	4-10b	4-24
Removal	4-10a	4-24
Gate rack maintenance, cargo;		
Assembly	12-4c	12-8
Disassembly	12-4a	12-8
Inspection	12-4b	12-8
Gearshift lever knob and boot replacement, transmission:		
Installation	5-3b	5-3
Removal	5-3a	5-3
General information, introduction:		
Destruction of Army Materiel to prevent enemy use	1-3	1-1
Equipment improvement recommendations (EIR's), reporting	1-5	1-1
Forms and records, maintenance	1-2	1-1
Improvement report and maintenance digest (EIR MD), equipment	1-6	1-2
Preparation for storage or shipment	1-4	1-1
Scope	1-1	1-1
Warranty information	1-7	1-2
(General inspection and servicing instructions	2-5	2-1
General preparation of truck for shipment:		
Cleaning	15-2	15-1
Lubricatio n	15-3	15-1
Packaging	15-5	15-2
Packing	15-6	15-2
Preservation	15-4	15-2
Scope	15-1	15-1
Shipment of Army documents	15-7	15-2
Glass and weatherseal maintenance, cab door:		
Cab door glass adjustment	11-17c	11-34
Installation	11-17b	11-34
Removal	11-17a	11-34
Glove compartment replacement:		
Installation	11-33b	11-63
Removal	11-33a	11-63
Gondola seat cushions replacement:		
Installation	12-57b	12-114
Removal	12-57a	12-114
Gondola windshield wiper blade, arm, and motor replacement:		
Installation	11-42b	11-75
Removal	11-42a	11-75
Governor maintenance, air compressor:		
Check and adjustment	8-25c	8-56
Installation	8-25b	8-54
Removal	8-25a	8-54
Guard replacement, splash:		
Installation	12-73b	12-133
Removal	12-73a	12-133
Gun mount bracket replacement, machine:		
Installation	11-24b	11-46
Removal	11-24a	11-46
H		
Hand airbrake kit replacement:		
Installation	14-48b	14-90
Removal	14-48a	14-90
Hand control and cable replacement, deepwater fording:		
Installation,	14-27b	14-52
Removal	14-27a	14-52
Hand control valve replacement, airbrake:		
Installation	8-23b	8-48
Removal	8-23a	8-48
Handles and lock replacement, cab door:		
Cab door lock installation.....	11-19d	11-38
Cab door lock removal	11-19c	11-38
Inside door handle installation	11-19e	11-38
Inside door handle removal	11-19b	11-38
Outside door handle installation	11-19f	11-38
Outsid door handle removal. . .	11-19a	11-38
Handles replacement, cab:		
Installation	11-15b	11-31
Removal	11-15a	11-31
Hand winch maintenance (M821):		
Cleaning and inspection	13-6b	13-14
Installation	13-6c	13-14
Removal	13-6a	13-14
Hardtop kit maintenance:		
Assembly	14-22c	14-44
Disassembly	14-22b	14-44
Installation	14-22d	14-46
Removal	14-22a	14-44

INDEX (Contd)

	Para	Page
Harness repair, wiring:		
Plug assembly repair	4-52d	4-108
Plug end cable connector repair	4-52b	4-107
Receptacle assembly repair	4-52e	4-109
Receptacle connector (with sleeve) repair	4-52c	4-108
Terminal-type cable connector repair	4-52a	4-107
Headlamp housing and sealed beam lamp maintenance:		
Alinement	4-38e	4-69
Headlight housing installation	4-38c	4-68
Headlight housing removal	4-38b	4-66
Sealed beam lamp installation	4-38d	4-68
Sealed beam lamp removal	4-38a	4-66
Headlight bracket replacement, left		
Installation	11-9b	11-16
Removal	11-9a	11-16
Headlight bracket replacement, right:		
Installation	11-8b	11-14
Removal	11-8a	11-14
Headlight high beam indicator and lamp replacement:		
Installation	4-15b	4-37
Removal	4-15a	4-37
Headlight high beam selector switch replacement:		
Installation	4-35b	4-63
Removal	4-35a	4-63
Heater diverter replacement, personnel:		
Installation	14-9b	14-16
Removal	14-9a	14-16
Heater duct replacement, personnel:		
Installation	14-8b	14-14
Removal	14-8a	14-12
Heater harness replacement, fuel burning personnel:		
Installation	14-7b	14-10
Removal	14-7a	14-10
Heater pump and mounting bucket replacement, coolant:		
Installation	14-15b	14-30
Removal	14-15a	14-30
High beam indicator and lamp replacement, headlight:		
Installation	4-15b	4-37
Removal	4-15a	4-37
High beam selector switch replacement, headlight:		
Installation	4-35b	4-63
Removal	4-35a	4-63
Hinged roof and floor counter-balance cable replacement:		
Installation	12-23b	12-42
Removal	12-23a	12-42
Hinged roof blackout plungers replacement:		
Installation	12-39b	12-82
Removal	12-39a	12-82
Hinged roof panel lock replacement:		
Installation	12-27b	12-54
Removal	12-27a	12-54
Hinged roof panel maintenance:		
Assembly	12-31d	12-64
Cleaning and inspection	12-31c	12-62
Disassembly	12-31b	12-62
Installation	12-31e	12-64
Removal	12-31a	12-60
Hinges replacement, cab door and:		
Cab door hinges installation	11-16c	11-32
Cab door hinges removal	11-16b	11-32
Cab door installation	11-16d	11-32
Cab door removal	11-16a	11-32
Hinges replacement, hood:		
Installation	11-4b	11-6
Removal	11-4a	11-6
Hoist, winch, and crane maintenance index	13-1	13-1
Hoist winch autobrake maintenance (M816, M819):		
Adjustment	13-43b	13-98
Installation	13-43c	13-98
Removal	13-43a	13-98
Hoist winch block replacement (M816, M819), wrecker:		
Direct block installation	13-39b	13-90
Direct block removal	13-39a	13-90
Pulley block installation	13-39d	13-90
Pulley block removal	13-39c	13-90
Hoist winch cable replacement (M816, M819):		
Installation	13-42b	13-96
Removal	13-42a	13-96
Hood and radiator cover replacement:		
Installation	14-21b	14-42
Removal	14-21a	14-42

INDEX (Contd)

	Para	Page
Hood fasteners replacement:		
Hood holddown fastener and bracket installation	11-3f	11-5
Hood holddown fastener and bracket removal	11-3a	11-4
Hood support hook installation	11-3d	11-4
Hood support hook removal	11-3c	11-4
Safety latch installation	11-3e	11-5
Safety latch removal	11-3b	11-4
Hood hinges replacement:		
Installation	11-4b	11-6
Removal	11-4a	11-6
Hood replacement:		
Installation	11-2b	11-2
Removal	11-2a	11-2
Hook maintenance, pintle:		
Assembly	10-9d	10-13
Cleaning and inspection	10-9c	10-12
Disassembly	10-9b	10-12
Installation	10-9e	10-13
Removal	10-9a	10-12
Horizontal exhaust pipe maintenance (M821):		
Assembly	3-41c	3-78
Disassembly	3-41b	3-76
Installation	3-41d	3-78
Removal	3-41a	3-76
Horn contact brush replacement:		
Installation	4-31b	4-58
Removal	4-31a	4-58
Horn, solenoid, and bracket replacement:		
Installation	4-30b	4-56
Removal	4-30a	4-56
Horn switch replacement:		
Installation	4-29b	4-55
Removal	4-29a	4-55
Hose replacement, oil pump pickup and return:		
Installation	3-8b	3-12
Removal	3-8a	3-12
Hoses replacement, air cleaner:		
Installation	3-16b	3-25
Removal	3-16a	3-25
Hoses replacement, cooling system:		
Engine oil cooler hose installation	3-46d	3-88
Engine oil cooler hose removal	3-46c	3-88
Radiator inlet hose and outlet hose installation	3-46e	3-88
Radiator inlet hose and outlet hose removal	3-46b	3-88
Radiator vent hose and manifold return hose installation	3-46f	3-89
Radiator vent hose and manifold return hose removal	3-46a	3-88
Hoses replacement, power steering assist cylinder:		
Installation	9-20b	9-48
Removal	9-20a	9-48
Hot water heater and mounting bracket replacement, personnel:		
Installation	14-10b	14-18
Removal	14-10a	14-18
Hot water heater hose replacement, personnel:		
Installation	14-11b	14-20
Removal	14-11a	14-20
Housing and mount replacement, floodlight:		
Installation	4-43b	4-78
Removal	4-43a	4-77
Hub and drum maintenance, front:		
Cleaning and inspection	9-4b	9-12
Installation	9-4d	9-14
Lubrication	9-4c	9-14
Removal	9-4a	9-11
Hub and drum maintenance, rear:		
Cleaning and inspection	9-5b	9-18
Installation	9-5d	9-18
Lubrication	9-5c	9-18
Removal	9-5a	9-16
Hub replacement, fan:		
Installation	3-49b	3-94
Removal	3-49a	3-94
Hydraulic hoses replacement, wrecker control valve:		
Installation	13-34b	13-82
Removal	13-34a	13-82
Hydraulic lines replacement, tractor wrecker:		
Installation	13-45b	13-108
Removal	13-45a	13-106
Hydraulic oil reservoir replacement, wrecker:		
Installation	13-31b	13-76
Removal	13-31a	13-76
Hydraulic pressure test and adjustment, wrecker:		
Adjustment	13-35b	13-84
Testing	13-35a	13-84

INDEX (Contd)

	Para	Page
Hydraulic pump propeller shaft maintenance, tractor wrecker:		
Inspection	13-46b	13-109
Installation	13-46c	13-109
Removal	13-46a	13-109
Hydraulic wheel cylinder replacement:		
Installation	8-10b	8-18
Removal	8-10a	8-18
I		
Index, accelerator system maintenance	3-35	3-68
Index, accessory items maintenance	11-36	11-67
Index, air intake system maintenance	3-14	3-23
Index, alternator (100-amp) maintenance	14-40	14-78
Index, battery system maintenance	4-47	4-90
Index, body and cab maintenance	11-1	11-1
Index, bolster body maintenance	12-64	12-122
Index, cargo body maintenance	12-1	12-1
Index, charging system maintenance	4-1	4-1
Index, clutch system maintenance	3-11	3-16
Index, compressed air and brake system maintenance	8-19	8-38
Index, convoy warning light kit maintenance	14-50	14-96
Index, cooling system maintenance	3-44	3-84
Index, deepwater fording kit maintenance	14-26	14-52
Index, dump body maintenance	12-11	12-21
Index, equipment description and data	1-9	1-3
Index, exhaust system maintenance	3-39	3-74
Index, frame maintenance	10-1	10-1
Index, front and rear axle maintenance	7-7	7-13
Index, front and rear suspension maintenance	7-14	7-27
Index, hoist, winch, and crane maintenance	13-1	13-1
Index, instruments, sending units, switches, and horn maintenance	4-6	4-13
Index, lighting system maintenance	4-37	4-66
Index, mechanical parking brake maintenance	8-1	8-1
Index, mini lighting kits maintenance	14-37	14-72
Index, mounting kits maintenance	14-32	14-62
Index, power divider maintenance	13-54	13-123
Index, power takeoff maintenance	13-60	13-134
Index, propeller shafts maintenance	7-1	7-1
Index, service brakes and hydraulic system maintenance	8-7	8-13
Index, steering system maintenance	9-7	9-21
Index, tractor body maintenance	12-70	12-130
Index, tractor wrecker body maintenance	12-59	12-116
Index, transfer case maintenance	6-2	6-1
Index, transmission maintenance	5-1	5-1
Index, troop seat mounting kit and seatbelt kits maintenance	14-44	14-84
Index, van body maintenance	12-18	12-34
Index, van cable reel kit maintenance	14-60	14-116
Index, wheels, hubs, and drums maintenance	9-1	9-1
Index, winterization kits maintenance	14-1	14-1
Index, wiring circuits and harnesses maintenance	4-51	4-106
Index, wrecker body maintenance	12-48	12-101
Indicator and lamp replacement, cold start:		
Installation	3-32b	3-64
Removal	3-32a	3-64
Indicator maintenance, air cleaner:		
Cleaning and inspection	3-18c	3-30
Installation	3-18d	3-30
Removal	3-18b	3-28
Testing	3-18a	3-28
Inner boom roller adjustment, wrecker	13-37	13-87

INDEX (Contd)

	Para	Page
Instrument cluster maintenance:		
Assembly	4-7c	4-16
Disassembly	4-7b	4-16
Installation	4-7d	4-16
Removal	4-7a	4-14
Instrument panel replacement:		
Installation	4-8b	4-20
Removal	4-8a	4-19
Instruments, sending units, switches, and horn maintenance index	4 6	4-13
Insulation replacement, thermal barrier:		
Installation	14-20b	14-40
Removal	14-20a	14-40
Interior and exterior telephone jacks replacement:		
Inside jack post installation	12-40d	12-84
Inside jack post removal	12-40a	12-84
Outside jack post installation	12-40c	12-84
Outside jack post removal	12-40b	12-84
Intermediate turn signal light replacement:		
Installation	14-38b	14-72
Removal	14-38a	14-72
Introduction:		
Destruction of Army Materiel to prevent enemy use	1-3	1-1
Equipment improvement recommendations (EIR's), reporting	1-5	1-1
Equipment improvement report and maintenance digest (EIR MD)	1-6	1-2
Forms, records, and reports, maintenance	1-2	1-1
Preparation for storage or shipment	1-4	1-1
Scope	1-1	1-1
Warranty information	1-7	1-2

J

	Para	Page
Jacking and supporting vehicle:		
Chocking wheels	9-2a	9-2
Lowering front axle	9-2c	9-2
Lowering front frame	9-2e	9-2
Lowering rear axle(s)	9-2g	9-4
Lowering rear frame	9-2i	9-5
Raising and supporting front axle	9-2b	9-2
Raising and supporting front frame	9-2d	9-2
Raising and supporting rear axle(s)	9-2f	9-4
Raising and supporting rear frame	9-2h	9-5
Jack replacement, outrigger:		
Installation	12-52b	12-108
Removal	12-52a	12-108
Joint maintenance, universal:		
Assembly	7-5c	7-10
Cleaning and inspection	7-5b	7-10
Disassembly	7-5a	7-8

K

	Para	Page
Kit maintenance, A-frame:		
Inspection	14-31b	14-60
Installation	14-31c	14-60
Removal	14-31a	14-58
Kit maintenance, hardtop:		
Assembly	14-22c	14-44
Disassembly	14-22b	14-44
Installation	14-22d	14-46
Removal	14-22a	14-44
Kit maintenance, tachograph:		
Instrument cluster installation	14-49d	14-94
Instrument cluster removal	14-49c	14-93
Tachograph adjustment	14-49g	14-95
Tachograph chart and lamp installation	14-49f	14-94
Tachograph chart and lamp removal	14-49a	14-92
Tachograph installation	14-49e	14-94
Tachograph removal	14-49b	14-92
Kit replacement, fixed seatbelt:		
Companion seatbelt installation	14-45d	14-85
Companion seatbelt removal	14-45c	14-85
Driver's seatbelt installation	14-45b	14-84
Driver's seatbelt removal	14-45a	14-84
Kit replacement, floating seatbelt:		
Companion seatbelt installation	14-46d	14-87
Companion seatbelt removal	14-46c	14-86
Driver's seatbelt installation	14-46b	14-86
Driver's seatbelt removal	14-46a	14-86
Kit replacement, hand airbrake:		
Installation	14-48b	14-90
Removal	14-48a	14-90

INDEX (Contd)

	Para	Page
Kit replacement, troop seat and side rack:		
Side rack installation	14-47c	14-88
Side rack removal	14-47b	14-88
Troop seat installation	14-47d	14-89
Troop seat removal	14-47a	14-88
Knuckle (CV) boot replacement, steering:		
Installation	7-8b	7-14
Removal	7-8a	7-14
L		
Lamp replacement, floodlight:		
Lamp installation	4-42b	4-76
Lamp removal	4-42a	4-76
Left fender replacement:		
Installation	11-11b	11-24
Removal	11-11a	11-20
Left headlight bracket replacement:		
Installation	11-9b	11-16
Removal	11-9a	11-16
Left side panel replacement:		
Installation	11-6b	11-8
Removal	11-6a	11-8
Lift cylinder packing adjustment, wrecker:	13-36	13-86
Liftgate controls maintenance, van:		
Assembly	13-47d	13-110
Disassembly	13-47b	13-110
Inspection	13-47c	13-110
Installation	13-47e	13-110
Removal	13-47a	13-110
Lifting brackets replacement, van body:		
Installation	12-30b	12-58
Removal	12-30a	12-58
Lifting shackle replacement, front:		
Installation	10-4b	10-4
Removal	10-4a	10-4
Lifting shackle replacement, rear:		
Installation	10-5b	10-6
Removal	10-5a	10-6
Light fixtures maintenance, ceiling:		
Ceiling light fixture installation	12-45f	12-97
Ceiling light fixture removal	12-45b	12-94
Fluorescent light fixture assembly	12-45d	12-96
Fluorescent light fixture disassembly	12-45c	12-96
Fluorescent light fixture installation	12-45e	12-96
Fluorescent light fixture removal	12-45a	12-94
Light flasher replacement, warning signal:		
Installation	4-34b	4-62
Removal	4-34a	4-62
Light harness replacement, convoy warning:		
Installation	14-54b	14-104
Removal	14-54a	14-104
Light harness (M817) replacement, convoy warning:		
Installation	14-55b	14-106
Removal	14-55a	14-106
Light harness (M820, M820Al, M820A2) replacement, convoy warning:		
Installation	14-56b	14-108
Removal	14-56a	14-108
Lighting system maintenance index	4-37	4-66
Light mount (M817) replacement, convoy warning:		
Installation	14-53b	14-102
Removal	14-53a	14-102
Light mount (M820, M820Al, M820A2) replacement, convoy warning:		
Installation	14-52b	14-100
Removal	14-52a	14-100
Light mount replacement, convoy warning:		
Installation	14-51b	14-98
Removal	14-51a	14-96
Light replacement, convoy warning:		
Installation	14-58b	14-112
Removal	14-58a	14-112
Light resistor and leads replacement, convoy warning:		
Installation	14-57b	14-110
Removal	14-57a	14-110
Lights replacement, fluorescent:		
Installation	12-42b	12-87
Removal	12-42a	12-87
Light switch replacement:		
Installation	4-16b	4-38
Removal	4-16a	4-38
Light switch replacement, convoy warning:		
Installation	14-59b	14-114
Removal	14-59a	14-114

INDEX (Contd)

	Para	Page
Limited storage:		
Inspection in limited storage . . .	15-11	15-3
Limited storage instructions	15-10	15-3
Removal fiomlimited storage . .	15-12	15-3
Scope	15-9	15-2
Link replacement, drag:		
Installation	9-12b	9-32
Removal	9-12a	9-32
Loading and movement.	15-8	15-2
Lock replacement, hinged roof panel:		
Installation	12-27b	12-54
Removal	12-27a	12-54
Lock replacement, side panel:		
Installation	12-26b	12-52
Removal	12-26a	12-52
Lock switch replacement, brake:		
Installation	4-27b	4-52
Removal	4-27a	4-52
Lockout switch replacement, oil pressure:		
Installation	4-19b	4-41
Removal	4-19a	4-41
Lock switch replacement, microbrake:		
Installation	4-21b	4-43
Removal	4-21a	4-43
Low air pressure buzzer replacement:		
Installation	4-23b	4-46
Removal	4-23a	4-46
Low air pressure indicator switch replacement:		
Installation	4-26b	4-50
Removal	4-26a	4-50

M

	Para	Page
Machine gun mount bracket replacement:		
Installation	11-24b	11-46
Removal	11-24a	11-46
Machine gun mount kit maintenance:		
Bracket post assembly	14-33c	14-65
Bracket post disassembly	14-33b	14-65
Installation	14-33d	14-66
Removal	14-33a	14-62
Maintenance allocation chart, appendix B:		
Explanation of columns in the MAC, section II....	B-3	B-2
General	B-1	B-1
Maintenance allocation chart. . .		B-3
Maintenance functions	B-2	B-1
Maintenance digest, equipment improvement report and.	1-6	1-2
Maintenance forms, records, and reports	1-2	1-1
Major external components, location and description of.	1-11	1-10
Major internal components, location and description of.	1-12	1-12
Marker lights replacement, front and rear side:		
Front side marker lights installation	14-39b	14-74
Front side marker lights removal	14-39a	14-74
Rear side marker lights installation	14-39d	14-76
Rear side marker lights removal	14-39c	14-76
Master cylinder mounting bracket replacement:		
Installation	8-12b	8-22
Removal	8-12a	8-22
Master cylinder replacement:		
Installation	8-11b	8-20
Removal	8-11a	8-20
Mechanical parking brake maintenance index	8-1	8-1
Mechanical systems troubleshooting:		
General	2-12	2-66
Symptom index, mechanical systems troubleshooting		2-67
Mechanical troubleshooting (table 2-2)		2-70
Mechanism lock replacement, expanding and retracting:		
Installation	12-36b	12-75
Removal	12-36a	12-75
Microbrake lock switch replacement:		
Installation	4-21b	4-43
Removal	4-21a	4-43
Microbrake lock wiring replacement:		
Installation	4-54b	4-116
Removal	4-54a	4-116
Midwinch propeller shaft redacement, bolster:		
Installation	13-14b	13-34
Removal	13-14a	13-34

INDEX (Contd)

	Para	Page
Midwinch replacement, bolster:		
Installation	13-12b	13-28
Removal	13-12a	13-28
Mini lighting kits maintenance index	14-37	14-72
Mirror, brackets, and arm replacement, rearview:		
Installatio n	11-43b	11-76
Removal	11-43a	11-76
Models, differences between..	1-14	1-32
Motor replacement, starter:		
Installation	4-5b	4-12
Removal	4-5a	4-10
Mounting bracket replacement, master cylinder:		
Installation	8-12b	8-22
Removal	8-12a	8-22
Mounting bracket replacement, personnel heater:		
Installation	14-3b	14-4
Removal	14-3a	14-4
Mounting bracket replacement, vise and:		
Installation	12-53b	12-110
Removal	12-53a	12-110
Mounting brackets maintenance, alternator (60 ampere) and:		
Adjustment	4-2c	4-4
Installation	4-2b	4-4
Removal	4-2a	4-2
Mounting kit replacement, decontamination:		
Installation	14-34b	14-68
Removal	14-34a	14-68
Mounting kit replacement, fire extinguisher:		
Installation	14-36b	14-71
Removal	14-36a	14-71
Mounting kit replacement, rifle:		
Installation	14-35b	14-70
Removal	14-35a	14-70
Mounting kits maintenance index	14-32	14-62
Mount kit maintenance, machine gun:		
Bracket post assembly	14-33c	14-65
Bracket post disassembly	14-33b	14-65
Installation	14-33d	14-66
Removal.	14-33a	14-62
Mount replacement (all except M818), pintle:		
Installation	10-10b	10-14
Removal	10-10a	10-14
Mount replacement (M818), pintle:		
Installation	10-11b	10-16
Removal	10-11a	10-16
Movement, loading and	15-8	15-2
Muffler replacement, exhaust:		
Installation	3-42b	3-80
Removal	3-42	3-80

N

	Para	Page
Nozzle and glow plug replacement, preheater:		
Installation	3-30b	3-60
Removal	3-30a	3-60

O

	Para	Page
Oil dipstick and tube replacement:		
Installation	3-3b	3-2
Removal	3-3a	3-2
Oil filter and housing maintenance, engine:		
Cleaning and inspection	3-5d	3-7
Filter installation	3-5f	3-7
Filter removal	3-5b	3-6
Oil drainage	3-5a	3-6
Oil filter housing assembly	3-5e	3-7
Oil filter housing disassembly	3-5c	3-6
Oil filter element replacement, wrecker hydraulic:		
Installation	13-30b	13-74
Removal	13-30a	13-74
Oil pan shroud and exhaust tube replacement:		
Installation	14-19b	14-38
Removal	14-19a	14-38
Oil pressure gage replacement, air gage and:		
Installation	4-9b	4-22
Removal	4-9a	4-22
Oil pressure lockout switch replacement:		
Installation	4-19b	4-41
Removal	4-19a	4-41
Oil pressure piping replacement:		
Installation	3-6b	3-8
Removal	3-6a	3-8
Oil pump pickup and return hose replacement:		
Installation	3-8b	3-12
Removal	3-8a	3-12

INDEX (Contd)

	Para	Page
Oil seal replacement, front axle:		
Installation	7-11b	7-22
Removal	7-11a	7-22
Oil tank replacement, van liftgate:		
Installation	13-49b	13-114
Removal	13-49a	13-114
Operation, control systems	1-18	1-36
Operation, electrical systems	1-20	1-56
Operation, power systems	1-19	1-45
Operation, principles of		
General	1-16	1-36
Index, reference	1-17	1-36
Outrigger jack replacement:		
Installation	12-52b	12-108
Removal	12-52a	12-108
Outrigger jack replacement, tractor wrecker:		
Installation	12-63b	12-120
Removal	12-63a	12-120

P

Panel replacement, hinged roof:		
Assembly	12-31d	12-64
Cleaning and inspection	12-31c	12-62
Disassembly	12-31b	12-62
Installation	12-31e	12-64
Removal	12-31a	12-60
Panel replacement, instrument:		
Installation	4-8b	4-20
Removal	4-8a	4-19
Panel seals replacement:		
Floor panel seals installation	12-25g	12-51
Floor panel seals removal	12-25b	12-46
Roof panel seals installation	12-25h	12-51
Roof panel seals removal	12-25a	12-46
Side panel seals installation	12-25e	12-50
Side panel seals removal	12-25d	12-48
Wall panel seals installation	12-25f	12-51
Wall panel seals removal	12-25c	12-48
Parking brake cable replacement:		
Installation	8-3b	8-4
Removal	8-3a	8-4
Parking brakedrum replacement:		
Installation	8-6b	8-12
Removal	8-6a	8-12
Parking brake lever replacement:		
Installation	8-2b	8-2
Removal	8-2a	8-2
Parking brakeshoe adjustment	8-5	8-10
Parking brakeshoe maintenance:		
Assembly	8-4d	8-8
Cleaning and inspection	8-4c	8-8
Disassembly	8-4b	8-6
Installation	8-4e	8-8
Removal	8-4a	8-6
Pedal adjustment, brake:		
Adjustment	8-17b	8-37
Test	8-17a	8-37
Pedal, bracket, rod, and stop-screw replacement, accelerator		
Installation	3-36b	3-68
Removal	3-36a	3-68
Pedal maintenance, clutch:		
Adjustment	3-12c	3-18
Installation	3-12b	3-16
Removal	3-12a	3-16
Pedal replacement, brake:		
Installation	8-16b	8-36
Removal	8-16a	8-36
Performance data, vehicle	1-15	1-33
Personnel heater control box replacement:		
Installation	14-5b	14-8
Removal	14-5a	14-8
Personnel heater control cables replacement:		
Installation	14-12b	14-22
Removal	14-12a	14-22
Personnel heater diverter replacement:		
Installation	14-9b	14-16
Removal	14-9a	14-16
Personnel heater duct replacement:		
Installation	14-8b	14-14
Removal	14-8a	14-12
Personnel heater exhaust tube replacement:		
Installation	14-6b	14-9
Removal	14-6a	14-9
Personnel heater fuel pump replacement:		
Installation	14-4b	14-6
Removal	14-4a	14-6
Personnel heater harness replacement, fuel burning:		
Installation	14-7b	14-10
Removal	14-7a	14-10
Personnel heater mounting bracket replacement:		
Installation	14-3b	14-4
Removal	14-3a	14-4

INDEX (Contd)

	Para	Page
Personnel heater replacement, fuel burning:		
Installation	14-2b	14-2
Removal	14-2a	14-2
Personnel hot water heater and mounting bracket replacement:		
Installation	14-10b	14-18
Removal	14-10a	14-18
Personnel hot water heater hose replacement:		
Installation	14-11b	14-20
Removal	14-11a	14-20
Pintle hook maintenance:		
Assembly	10-9d	10-13
Cleaning and inspection	10-9c	10-12
Disassembly	10-9b	10-12
Installation	10-9e	10-13
Removal	10-9a	10-12
Pintle mount replacement (all except M818):		
Installation	10-10b	10-14
Removal	10-10a	10-14
Pintle mount replacement (M818):		
Installation	10-11b	10-16
Removal	10-11a	10-16
Pioneer tool kit bracket and toolbox replacement, cargo:		
Pioneer tool kit bracket installation	12-9d	12-18
Pioneer tool kit bracket removal	12-9a	12-18
Toolbox installation	12-9c	12-18
Toolbox removal	12-9b	12-18
Pioneer tool kit bracket replacement, dump body:		
Installation	12-16b	12-32
Removal	12-16a	12-32
Pipe maintenance (M821), horizontal exhaust:		
Assembly	3-41c	3-78
Disassembly	3-41b	3-76
Installation	3-41d	3-78
Removal	3-41a	3-76
Pipe replacement vertical exhaust:		
Installation	3-40b	3-75
Removal	3-40a	3-74
Pitman arm replacement:		
Installation	9-11b	9-30
Removal	9-11a	9-30
Plate replacement, data:		
Installation	11-44b	11-78
Removal	11-44a	11-78
Power divider maintenance index	13-54	13-123
Power divider control lever and linkage replacement:		
Installation	13-55b	13-124
Removal	13-55a	13-124
Power divider-to-hydraulic pump propeller shaft replacement:		
Installation	13-58b	13-130
Removal	13-58a	13-130
Power divider-to-rear winch drive propeller shaft replacement:		
Installation	13-57b	13-128
Removal	13-57a	13-128
Power divider-to-transfer propeller shaft maintenance:		
Assembly	13-56d	13-126
Disassembly	13-56b	13-126
Inspection	13-56c	13-126
Installation	13-56e	13-126
Removal	13-56a	13-126
Power divider yoke and seal replacement:		
Installation	13-59b	13-132
Removal	13-59a	13-132
Power steering assist cylinder and socket maintenance:		
Assembly	9-10c	9-28
Disassembly	9-10b	9-27
Installation	9-10d	9-28
On-vehicle adjustment	9-10e	9-28
Removal	9-10a	9-26
Power steering assist cylinder front and side shields replacement:		
Installation	11-26b	11-48
Removal	11-26a	11-48
Power steering assist cylinder hoses replacement:		
Installation	9-20b	9-48
Removal	9-20a	9-48
Power steering gear-to-assist cylinder tubes replacement:		
Installation	9-19b	9-46
Removal	9-19a	9-46
Power steering pump drivebelts maintenance:		
Adjustment	9-16d	9-40
Inspection	9-16b	9-40
Installation	9-16c	9-40
Removal	9-16a	9-40

INDEX (Contd)

	Para	Page
Power steering pump hoses replacement:		
Installation	9-18b	9-44
Removal	9-18a	9-44
Power steering pump maintenance:		
Bleeding hydraulic power steering system	9-17c	9-43
Installation	9-17b	9-42
Removal	9-17a	9-42
Power systems operation	1-19	1-45
Preheater nozzle and glow plug replacement:		
Installation	3-30b	3-60
Removal	3-30a	3-60
Preheater primer pump replacement:		
Installation	3-31b	3-62
Removal	3-31a	3-62
Preparation for storage or shipment	1-4	1-1
Pressure gage replacement, primer:		
Installation	3-29b	3-56
Removal	3-29a	3-55
Pressure piping replacement, oil:		
Installation	3-6b	3-8
Removal	3-6a	3-8
Pressure relief valve replacement, deepwater fording:		
Installation	14-29b	14-56
Removal	14-29a	14-56
Pressure switch replacement, stoplight:		
Installation	4-25b	4-48
Removal	4-25a	4-48
Pressurization valve replacement, deepwater fording:		
Installation	14-28b	14-54
Removal	14-28a	14-54
Preventive maintenance checks and services:		
General	2-7	2-2
General service and inspection procedures	2-10	2-3
Intervals	2-8	2-2
Reporting repairs	2-9	2-3
Specific PMCS procedures	2-11	2-3
Specific PMCS procedures (table 2-1)		2-4
Primer pressure gage replacement:		
Installation	3-29b	3-56
Removal	3-29a	3-55
Primer pump replacement, preheater:		
Installation	3-31b	3-62
Removal	3-31a	3-62
Principles of operation:		
General	1-16	1-36
Reference index	1-17	1-36
Propeller shaft maintenance, dump hoist pump:		
Cleaning and inspection	13-29b	13-72
Installation	13-29c	13-72
Removal	13-29a	13-72
Propeller shaft maintenance, power divider-to-transfer:		
Assembly	13-56d	13-126
Disassembly	13-56b	13-126
Inspection	13-56c	13-126
Installation	13-56e	13-126
Removal	13-56a	13-126
Propeller shaft maintenance, rear winch:		
Cleaning and inspection	13-16b	13-40
Installation	13-16c	13-40
Removal	13-16a	13-40
Propeller shaft repair:		
Assembly	7-4c	7-7
Cleaning and inspection	7-4b	7-6
Disassembly	7-4a	7-6
Propeller shaft replacement, front winch:		
Installation	13-9b	13-22
Removal	13-9a	13-22
Propeller shaft replacement, power divider-to-hydraulic pump:		
Installation	13-58b	13-130
Removal	13-58a	13-130
Propeller shaft replacement, power divider-to-rear winch drive:		
Installation	13-57b	13-128
Removal	13-57a	13-128
Propeller shaft replacement, steering column:		
Installation	9-14b	9-36
Removal	9-14a	9-36
Propeller shaft replacement (transfer-to-center bearing):		
Installation	7-3b	7-4
Removal	7-3a	7-4
Propeller shafts maintenance index	7-1	7-1

INDEX (Contd)

	Para	Page
Propeller shafts replacement:		
Transfer-to-forward-rear propeller shaft installation	7-2d	7-3
Transfer-to-forward-rear propeller shaft removal	7-2c	7-3
Transmission-to-transfer propeller shaft installation	7-2b	7-2
Transmission-to-transfer propeller shaft removal	7-2a	7-2
Protective control box and bracket replacement:		
Installation	4-36b	4-64
Removal	4-36a	4-64
Protector maintenance, cab:		
Assembly	12-68d	12-127
Cleaning and inspection	12-68c	12-126
Disassembly	12-68b	12-126
Installation	12-68e	12-127
Removal	12-68a	12-126
PTO linkage maintenance, transmission:		
Assembly	13-61d	13-136
Cleaning and inspection	13-61c	13-136
Disassembly	13-61b	13-135
Installation	13-61e	13-136
Removal	13-61a	13-134
Pulley replacement, alternator		
Installation	4-3b	4-6
Removal	4-3a	4-6
Pump hose replacement, power steering:		
Installation	9-18b	9-44
Removal	9-18a	9-44
Pump maintenance, power steering:		
Bleeding hydraulic power steering system	9-17c	9-43
Installation	9-17b	9-42
Removal	9-17a	9-42
Pump motor replacement, van liftgate:		
Installation	13-50b	13-116
Removal	13-50a	13-116
Pump propeller shaft replacement, van liftgate:		
Installation	13-53b	13-122
Removal	13-53a	13-122
Pump replacement, water:		
Installation	3-55b	3-104
Removal	3-55a	3-104

R

	Para	Page
Radiator and mounting brackets replacement:		
Installation	3-50b	3-96
Removal	3-50a	3-96
Radiator cover replacement, hood and:		
Installation	14-21b	14-42
Removal	14-21a	14-42
Radiator fan shrouds replacement:		
Installation	3-51b	3-98
Removal	3-51a	3-98
Rear axle shaft maintenance:		
Cleaning and inspection	7-12b	7-24
Installation	7-12c	7-24
Removal	7-12a	7-24
Rear bumperette replacement:		
Installation	10-3b	10-3
Removal	10-3a	10-3
Rear composite light housing and bracket replacement:		
Installation (M813, M813Al, M814)	4-45f	4-85
Installation (M815)	4-45l	4-88
Installation (M816)	4-45j	4-87
Installation (M817)	4-45d	4-84
Installation (M818, M820, M820Al, M820A2)	4-45b	4-82
Installation (M819)	4-45h	4-86
Removal (M813, M813Al, M814)	4-45e	4-85
Removal (M815)	4-45k	4-88
Removal (M816)	4-45i	4-87
Removal (M817)	4-45c	4-84
Removal (M818, M820, M820Al, M820A2)	4-45a	4-82
Removal (M819)	4-45g	4-86
Rear composite light lamp replacement:		
Installation	4-46b	4-89
Removal	4-46a	4-89
Rear door blackout switch replacement:		
Installation	12-28b	12-56
Removal	12-28a	12-56
Rear door lock replacement:		
Installation	12-24b	12-44
Removal	12-24a	12-44
Rear door window replacement		
Installation	12-21b	12-38
Removal	12-21a	12-38

INDEX (Contd)

	Para	Page
Rear hub and drum maintenance:		
Cleaning and inspection	9-5b	9-18
Installation	9-5d	9-18
Lubrication	9-5c	9-18
Removal	9-5a	9-16
Rear lifting shackle replacement:		
Installation	10-5b	10-6
Removal	10-5a	10-6
Rear splash guard replacement (wrecker body):		
Installation	12-61b	12-118
Removal	12-61a	12-118
Rear splash guard replacement:		
Installation	12-49b	12-102
Removal	12-49a	12-102
Rear spring replacement:		
Installation	7-17b	7-38
Removal	7-17a	7-36
Rear spring seat maintenance:		
Cleaning and inspection	7-18b	7-42
Installation	7-18c	7-42
Removal	7-18a	7-40
Rearview mirror, brackets, and arm replacement:		
Installation	11-43b	11-76
Removal	11-43a	11-76
Rear winch airbrake chamber replacement:		
Installation	13-22b	13-52
Removal	13-22a	13-52
Rear winch cable roller replacement, wrecker:		
Installation	13-21b	13-50
Removal	13-21a	13-50
Rear winch cable tensioner replacement:		
Installation	13-24b	13-56
Removal	13-24a	13-56
Rear winch cable tensioner valve replacement:		
Installation	13-20b	13-48
Removal	13-20a	13-48
Rear winch controls maintenance:		
Adjustment	13-18d	13-44
Inspection	13-18b	13-44
Installation	13-18c	13-44
Removal	13-18a	13-44
Rear winch drivechain and sprockets maintenance:		
Adjustment	13-17f	13-43
Cleaning and inspection	13-17c	13-42
Drive chain installation	13-17e	13-43
Drive chain removal	13-17a	13-42
Sprockets installation	13-17d	13-42
Sprockets removal	13-17b	13-42
Rear winch driveshaft housing maintenance:		
Assembly	13-23d	13-55
Cleaning and inspection	13-23c	13-54
Disassembly	13-23b	13-54
Installation	13-23e	13-55
Removal	13-23a	13-54
Rear winch propeller shaft maintenance:		
Cleaning and inspection	13-16b	13-40
Installation	13-16c	13-40
Removal	13-16a	13-40
Rear winch replacement:		
Installation	13-15b	13-38
Removal	13-15a	13-36
Receptacle kit replacement, slave:		
Installation	14-25b	14-50
Removal	14-25a	14-50
Receptacle replacement, slave:		
Installation	4-56b	4-120
Removal	4-56a	4-120
Receptacles replacement, 3-phase and 400 Hz:		
3-phase receptacle installation	12-34c	12-72
3-phase receptacle removal	12-34a	12-72
400-hz receptacle installation	12-34d	12-72
400-hz receptacle removal	12-34b	12-72
Reel main support replacement, van cable:		
Installation	14-62b	14-118
Removal	14-62a	14-118
Reel maintenance, van cable:		
Assembly	14-61c	14-116
Disassembly	14-61b	14-116
Installation	14-61d	14-116
Removal	14-61a	14-116
References, appendix A		
Army regulations	A-9	A-3
Field manuals	A-5	A-1
Forms	A-3	A-1
Other publications	A-8	A-3
Publications index	A-2	A-1
Scope	A-1	A-1
Supply catalogs	A-4	A-1
Technical bulletins	A-7	A-3
Technical manuals	A-6	A-2
Reflector replacement:		
Installation	11-38b	11-69
Removal	11-38a	11-69

INDEX (Contd)

	Para	Page
Regulator replacement, alternator, 100-amp:		
Installation	14-43b	14-82
Removal	14-43a	14-82
Reinforcement panel replacement, cab:		
Installation	11-23b	11-45
Removal	11-23a	11-45
Relay replacement, cold start:		
Installation	3-34b	3-67
Removal	3-34a	3-67
Repair parts	2-3	2-1
Repair parts, special tools, TMDE, and support equipment:		
Common tools and equipment	2-1	2-1
Repair parts	2-3	2-1
Special tools, TMDE, and support equipment	2-2	2-1
Reporting equipment improvement recommendations (EIR's)	1-5	1-1
Reservoir replacement, air pack:		
Installation	8-24b	8-52
Removal	8-24a	8-50
Resistor, and leads replacement, control switch,		
Installation	14-13b	14-24
Removal	14-13a	14-24
Resistor replacement, cold start:		
Installation	3-33b	3-66
Removal	3-33a	3-66
Restrictor valve replacement, wrecker:		
Installation	13-32b	13-78
Removal	13-32a	13-78
Retractable window replacement:		
Installation	12-22b	12-40
Removal	12-22a	12-40
Rifle mounting kit replacement:		
Installation	14-35b	14-70
Removal	14-35a	14-70
Right fender replacement:		
Installation	11-10b	11-18
Removal	11-10a	11-18
Right headlight bracket replacement:		
Installation	11-8b	11-14
Removal	11-8a	11-14
Right side panel maintenance:		
Assembly	11-7c	11-12
Disassembly	11-7b	11-10
Installation	11-7d	11-12
Removal	11-7a	11-10
Rods replacement, torque:		
Installation	7-21b	7-48
Removal	7-21a	7-48
S		
Safety latch maintenance, dump hoist:		
Assembly	13-25d	13-60
Cleaning and inspection	13-25c	13-60
Disassembly	13-25b	13-58
Installation	13-25e	13-60
Removal	13-25a	13-58
Safety latch replacement, van liftgate:		
Installation	13-48b	13-112
Removal	13-48a	13-112
Schematic and wiring diagram, appendix E		E-1
Sealed beam lamp maintenance, headlamp housing and:		
Alinement	4-38e	4-69
Headlight housing installation	4-38c	4-68
Headlight housing removal	4-38b	4-66
Sealed beam lamp installation	4-38d	4-68
Sealed beam lamp removal	4-38a	4-66
Seals replacement, panel:		
Floor panel seals installation	12-25g	12-51
Floor panel seals removal	12-25b	12-46
Roof panel seals installation	12-25h	12-51
Roof panel seals removal	12-25a	12-46
Side panel seals installation	12-25e	12-50
Side panel seals removal	12-25d	12-48
Wall panel seals installation	12-25f	12-51
Wall panel seals removal	12-25c	12-48
Seat cushion, backrest, frame, and seat adjuster replacement, driver's:		
Adjuster installation	11-34e	11-64
Adjuster removal	11-34d	11-64
Backrest installation	11-34g	11-64
Backrest removal	11-34b	11-64
Cushion installation	11-34h	11-64
Cushion removal	11-34a	11-64
Frame installation	11-34f	11-64
Frame removal	11-34c	11-64
Seat cushions replacement, gondola:		
Installation	12-57b	12-114
Removal	12-57a	12-114

INDEX (Contd)

	Para	Page
Seat maintenance, companion:		
Companion seat backrest installation	11-31h	11-60
Companion seat backrest removal	11-31a	11-58
Companion seat cushion installation	11-31g	11-60
Companion seat cushion removal	11-31b	11-58
Companion seat installation	11-31f	11-60
Companion seat removal	11-31c	11-58
Frame assembly	11-31e	11-60
Frame disassembly	11-31d	11-58
Seat replacement, driver's:		
Installation	11-32b	11-62
Removal	11-32a	11-62
Selector valve and mounting bracket maintenance:		
Inspection	3-22b	3-34
Installation	3-22c	3-34
Removal	3-22a	3-34
Selector valve flex hose replacement:		
Installation	3-21b	3-33
Removal	3-21a	3-33
Sending unit replacement, fuel level:		
Installation	4-24b	4-47
Removal	4-24a	4-47
Sending unit replacement, water temperature:		
Installation	4-28b	4-54
Removal	4-28a	4-54
Service brake adjustment	8-9	8-16
Service brake flexible hose replacement:		
Installation	8-13b	8-24
Removal	8-13a	8-24
Service brake system, bleeding:		
Manual method	8-15b	8-34
Pressure bleeding method	8-15a	8-30
Service brakes and hydraulic system maintenance index	8-7	8-13
Service brakeshoe maintenance:		
Cleaning and inspection	8-8b	8-14
Installation	8-8c	8-15
Removal	8-8a	8-14
Service upon receipt:		
General	2-4	2-1
General inspection and servicing instructions	2-5	2-1
Specific inspection and servicing instructions	2-6	2-2
Servicing, cooling system:		
Cleaning and flushing system	3-45c	3-86
Depressurizing system	3-45a	3-84
Draining system	3-45b	3-85
Filling system	3-45d	3-86
Shaft repair, propeller:		
Assembly	7-4c	7-7
Cleaning and inspection	7-4b	7-6
Disassembly	7-4a	7-6
Shaft replacement (transfer-to-center bearing), propeller:		
Installation	7-3b	7-4
Removal	7-3a	7-4
Shafts replacement, propeller:		
Transfer-to-forward-rear propeller shaft installation	7-2d	7-3
Transfer-to-forward-rear propeller shaft removal	7-2c	7-3
Transmission-to-transfer propeller shaft installation	7-2b	7-2
Transmission-to-transfer propeller shaft removal	7-2a	7-2
Shearpin replacement:		
Installation	13-2b	13-3
Removal	13-2a	13-3
Shield replacement, steering gear:		
Installation	11-25b	11-47
Removal	11-25a	11-47
Shift lever and control linkage maintenance, transfer case:		
Adjustment	6-4c	6-6
Installation	6-4b	6-4
Removal	6-4a	6-4
Shipment, general preparation of truck for shipment:		
Cleaning	15-2	15-1
Lubrication	15-3	15-1
Packaging	15-5	15-2
Packing	15-6	15-2
Preservation	15-4	15-2
Scope	15-1	15-1
Shipment of Army documents	15-7	15-2
Shock absorber replacement:		
Installation	7-19b	7-44
Removal	7-19a	7-44
Side marker and clearance light replacement:		
Installation	4-44b	4-80
Removal	4-44a	4-80
Side panel lock replacement:		
Installation	12-26b	12-52
Removal	12-26a	12-52

INDEX (Contd)

	Para	Page
Side panel maintenance, right:		
Assembly	11-7c	11-12
Disassembly	11-7b	11-10
Installation	11-7d	11-12
Removal	11-7a	11-10
Side panel replacement, left		
Installation	11-6b	11-8
Removal	11-6a	11-8
Signal hump, housing, and bracket replacement, warning		
Signal lamp installation	4-39d	4-71
Signal lamp removal	4-39a	4-70
Signal light housing installation	4-39c	4-70
Signal light housing removal	4-39b	4-70
Slave receptacle kit replacement:		
Installation	14-25b	14-50
Removal	14-25a	14-50
Slave receptacle replacement:		
Installation	4-56b	4-120
Removal	4-56a	4-120
Snorkel replacement, deepwater fording:		
Installation	14-30b	14-57
Removal	14-30a	14-57
Socket replacement, auxiliary power receptacle and:		
Installation	4-22b	4-44
Removal	4-22a	4-44
Soft top turnbuttons and lashing hooks replacement, cab:		
Lashing hook installation	11-35c	11-66
Lashing hook removal	11-35b	11-66
Turnbutton and snap shank installation	11-35d	11-66
Turnbutton and snap shank removal	11-35a	11-66
Solenoid, and bracket replacement, horn:		
Installation	4-30b	4-56
Removal	4-30a	4-56
Spare tire carrier replacement (bolster body):		
Installation	12-65b	12-123
Removal	12-65a	12-122
Spare tire carrier replacement (M813, M813Al), cargo:		
Installation	12-10b	12-20
Removal	12-10a	12-20
Spare tire carrier replacement (M814), cargo:		
Installation	12-8b	12-16
Removal	12-8a	12-16
Spare tire earner replacement (M817), dump body:		
Installation	12-14b	12-28
Removal	12-14a	12-28
Spare tire carrier replacement (tractor body):		
Installation	12-71b	12-131
Removal	12-71a	12-130
Spare tire carrier replacement (van body):		
Installation	12-46b	12-98
Removal	12-46a	12-98
Special purpose bodies systems operation	1-22	1-64
Special tools, TMDE, and support equipment	2-2	2-1
Specific inspection and servicing instructions	2-6	2-2
Speedometer and tachometer replacement:		
Installation	4-11b	4-26
Removal	4-11a	4-26
Speedometer drive adapter replacement:		
Installation	4-14b	4-36
Removal	4-14a	4-36
Speedometer flexible driveshaft and core maintenance:		
Inspection	4-13b	4-34
Installation	4-13c	4-34
Removal	4-13a	4-32
Splash guard replacement, dump body:		
Installation	12-17b	12-33
Removal	12-17a	12-33
Splash guard replacement (tractor body):		
Installation	12-73b	12-133
Removal	12-73a	12-133
Splash guard replacement (tractor wrecker body), front:		
Installation	12-60b	12-116
Removal	12-60a	12-116
Splash guard replacement (tractor wrecker body), rear:		
Installation	12-61b	12-118
Removal	12-61a	12-118
Splash guard replacement (wrecker body), front:		
Installation	12-50b	12-104
Removal	12-50a	12-104

INDEX (Contd)

	Para	Page
Splash guard replacement (wrecker body), rear:		
Installation	12-49b	12-102
Removal	12-49a	12-102
Splash guard replacement, upper and lower:		
Lower splash guard installation	12-5d	12-10
Lower splash guard removal	12-5a	12-10
Upper splash guard installation	12-5c	12-10
Upper splash guard removal	12-5b	12-10
Spring maintenance:		
Assembly	7-16c	7-34
Cleaning and inspection	7-16b	7-34
Disassembly	7-16a	7-32
Spring replacement, front:		
Installation	7-15b	7-30
Removal	7-15a	7-28
Spring replacement, rear		
Installation	7-17b	7-38
Removal	7-17a	7-36
Spring seat maintenance, rear:		
Cleaning and inspection	7-18b	7-42
Installation	7-18c	7-42
Removal	7-18a	7-40
Starter motor replacement:		
Installation	4-5b	4-12
Removal	4-5a	4-10
STE/ICE troubleshooting (simplified test equipment for internal combustion engines):		
General	2-16	2-186
STE/ICE chain index	2-17	2-186
STE/ICE description and operation	2-20	2-186
STE/ICE tests and setup procedure	2-19	2-186
Vehicle testing	2-21	2-194
Vehicle test meter (VTM) troubleshooting	2-18	2-186
Steering column propeller shaft replacement:		
Installation	9-14b	9-36
Removal	9-14a	9-36
Steering column replacement:		
Installation	9-15b	9-38
Removal	9-15a	9-38
Steering gear shield replacement:		
Installation	11-25b	11-47
Removal	11-25a	11-47
Steering knuckle (CV) boot replacement:		
Installation	7-8b	7-14
Removal	7-8a	7-14
Steering system maintenance index	9-7	9-21
Steering wheel replacement:		
Installation	9-13b	9-34
Removal	9-13a	9-34
Step replacement, wrecker body:		
Installation	12-58b	12-115
Removal	12-58a	12-115
Stoneguard replacement, brushguard and:		
Installation	11-5b	11-7
Removal	11-5a	11-7
Stoplight pressure switch replacement:		
Installation	4-25b	4-48
Removal	4-25a	4-48
Storage, limited:		
Inspection in limited storage	15-11	15-3
Limited storage instructions	15-10	15-3
Removal from limited storage	15-12	15-3
Scope	15-9	15-2
Storage or shipment, preparation for	1-4	1-1
Straps and hangers maintenance, fuel tank:		
Inspection	3-25b	3-46
Installation	3-25c	3-46
Removal	3-25a	3-46
Supply valve replacement, air:		
Installation	8-20b	8-39
Removal	8-20a	8-38
Supporting vehicle, jacking and:		
Chocking wheels	9-2a	9-2
Lowering front axle	9-2c	9-2
Lowering front frame	9-2e	9-2
Lowering rear axle(s)	9-2g	9-4
Lowering rear frame	9-2i	9-5
Raising and supporting front axle	9-2b	9-2
Raising and supporting front frame	9-2d	9-2
Raising and supporting rear axle(s)	9-2f	9-4
Raising and supporting rear frame	9-2h	9-5
Surge tank and mounting brackets replacement:		
Installation	3-48b	3-92
Removal	3-48a	3-92

INDEX (Contd)

	Para	Page
Switches, and receptacles replacement, ceiling, wall:		
Installation	12-35b	12-74
Removal	12-35a	12-74
Switch replacement, blackout:		
Installation	12-29b	12-57
Removal	12-29a	12-57
Switch replacement, horn:		
Installation	4-29b	4-55
Removal	4-29a	4-55
Switch replacement, light:		
Installation	4-16b	4-38
Removal	4-16a	4-38
Switch replacement, rear door blackout:		
Installation	12-28b	12-56
Removal	12-28a	12-56
System, fuel:		
General	3-19	3-32
Index, fuel system maintenance	3-20	3-32
System, transfer case:		
General	6-1	6-1
Index, transfer case system maintenance	6-2	6-1
Systems, engine:		
Engine lubrication system maintenance index	3-2	3-1
General	3-1	3-1
Systems operation, special purpose bodies	1-22	1-64

T

	Para	Page
Tachograph kit maintenance		
Instrument cluster installation	14-49d	14-94
Instrument cluster removal	14-49c	14-93
Tachograph adjustment	14-49g	14-95
Tahchograph chart and lamp installation	14-49f	14-94
Tachograph Chart and lamp removal	14-49a	14-92
Tachograph installation	14-49e	14-94
Tachograph removal	14-49b	14-92
Tachometer flexible driveshaft and core:		
Inspection	4-12b	4-30
Installation	4-12c	4-30
Removal	4-12a	4-28
Tachometer replacement, speedometer and:		
Installation	4-11b	4-26
Removal	4-11a	4-26
Tailgate control linkage maintenance, dump body:		
Adjustment	12-13c	12-26
Installation	12-13b	12-26
Removal	12-13a	12-24
Tailgate replacement, dump body:		
Installation	12-12b	12-22
Removal	12-12a	12-22
Tailgate replacement (M813, M814), cargo:		
Installation	12-6b	12-12
Removal	12-6a	12-12
Tailgate replacement (M813Al), cargo:		
Installation	12-7b	12-14
Removal	12-7a	12-14
Taillight bracket replacement:		
Installation	12-51b	12-106
Removal	12-51a	12-106
Tank maintenance, fuel:		
Assembly	3-24e	3-42
Cleaning and inspection	3-24d	3-42
Disassembly	3-24c	3-42
Draining	3-24a	3-40
Installation	3-24f	3-44
Removal	3-24b	3-40
Telephone jack replacement, van:		
Installation	12-32b	12-66
Removal	12-32a	12-66
Telephone jacks replacement, interior and exterior:		
Inside jack post installation	12-40d	12-84
Inside jack post removal	12-40a	12-84
Outside jack post installation...	12-40c	12-84
Outside jack post removal	12-40b	12-84
Testing, v ehicle	2-21	2-194
Tests and setup procedures, STE/ICE	2-19	2-186
Thermal barrier insulation replacement:		
Installation	14-20b	14-40
Removal	14-20a	14-40
Thermostatic switch and fluorescent starter replacement:		
Electrical heater thermostat installation	12-33f	12-71
Electrical heater thermostat removal	12-33e	12-71
Fluorescent starter installation.	12-33b	12-68
Fluorescent starter removal	12-33a	12-68
Van heater thermostat installation	12-33d	12-70
Van heater thermostat removal.	12-33c	12-70

INDEX (Contd)

	Para	Page
Thermostat replacement:		
Installation	3-47b	3-90
Removal	3-47a	3-90
Throttle control cable maintenance, wrecker:		
Adjustment	13-41c	13-94
Installation	13-41b	13-94
Removal	13-41a	13-94
Throttle control lever replacement, wrecker:		
Installation	13-40b	13-92
Removal	13-40a	13-92
Tiedown loop replacement, vehicle:		
Installation	10-2b	10-2
Removal	10-2a	10-2
Tie rod end maintenance:		
Inspection	9-9b	9-24
Installation	9-9c	9-24
Removal	9-9a	9-24
Tire and tube maintenance, wheel:		
Inspection	9-3c	9-8
Tire and tube installation	9-3d	9-9
Tire and tube removal	9-3b	9-7
Wheel installation	9-3e	9-10
Wheel removal	9-3a	9-6
Tire carrier replacement (bolster body), spare:		
Installation	12-65b	12-123
Removal	12-65a	12-122
Tire carrier replacement (tractor body), spare:		
Installation	12-71b	12-131
Removal	12-71a	12-130
Tire carrier replacement (van body), spare:		
Installation	12-46b	12-98
Removal	12-46a	12-98
Toe-in check and adjustment:		
Toe-in adjustment	9-8b	9-22
Toe-in check	9-8a	9-22
Tool kit bracket replacement, tractor pioneer:		
Installation	12-74b	12-134
Removal	12-74a	12-134
Tool kit bracket replacement, van pioneer:		
Installation	12-47b	12-100
Removal	12-47a	12-100
Tool kit bracket replacement, wrecker pioneer:		
Installation	12-55b	12-112
Removal	12-55a	12-112
Tool kit bracket replacement, bolster pioneer:		
Installation	12-66b	12-124
Removal	12-66a	12-124
Toolbox replacement, dump body:		
Installation	12-15b	12-30
Removal	12-15a	12-30
Toolbox replacement, tractor:		
Installation	12-72b	12-132
Removal	12-72a	12-132
Toolbox replacement, under cab:		
Installation	11-29b	11-54
Removal	11-29a	11-54
Torque limits, appendix D		D-1
Torque rods replacement:		
Installation	7-21b	7-48
Removal	7-21a	7-48
Tractor body maintenance index	12-70	12-130
Tractor pioneer tool kit bracket replacement:		
Installation	12-74b	12-134
Removal	12-74a	12-134
Tractor toolbox replacement:		
Installation	12-72b	12-132
Removal	12-72a	12-132
Tractor wrecker body maintenance index	12-59	12-116
Tractor wrecker body step replacement:		
Installation	12-62b	12-119
Removal	12-62a	12-119
Tractor wrecker control valve replacement:		
Installation	13-44b	13-103
Removal	13-44a	13-100
Tractor wrecker hydraulic lines replacement:		
Installation	13-45b	13-108
Removal	13-45a	13-106
Tractor wrecker hydraulic pump propeller shaft maintenance:		
Inspection	13-46b	13-109
Installation	13-46c	13-109
Removal	13-46a	13-109
Tractor wrecker outrigger jack replacement:		
Installation	12-63b	12-120
Removal	12-63a	12-120
Trailer brake coupling replacement:		
Installation	8-26b	8-58
Removal	8-26a	8-58

INDEX (Contd)

	Para	Page
Trailer carrier replacement		
Installation	12-67b	12-125
Removal	12-67a	12-125
Transfer case breather maintenance:		
Cleaning	6-5b	6-7
Installation	6-5c	6-7
Removal	6-5a	6-7
Transfer case declutch piping replacement:		
Installation	6-3b	6-2
Removal	6-3a	6-2
Transfer case shift lever and control linkage maintenance:		
Adjustment	6-4c	6-6
Installation	6-4b	6-4
Removal	6-4a	6-4
Transfer case system:		
General	6-1	6-1
Index, transfer case system maintenance	6-2	6-1
Transfer PTO control linkage replacement, (M815, M819 W/W):		
Inspection	13-62b	13-138
Installation	13-62c	13-138
Removal	13-62a	13-138
Transmission breather maintenance:		
Cleaning	5-2b	5-2
Installation	5-2c	5-2
Removal	5-2a	5-2
Transmission gearshift lever, transfer shift lever, and front winch lever cover replacement:		
Installation	14-23b	14-47
Removal	14-23a	14-47
Transmission gearshift lever knob and boot replacement:		
Installation	5-3b	5-3
Removal	5-3a	5-3
Transmission maintenance index	5-1	5-1
Transmission PTO control linkage maintenance, (M820A2 WO/W):		
Assembly	13-63d	13-142
Disassembly	13-63b	13-140
Inspection	13-63c	13-140
Installation	13-63e	13-142
Removal	13-63a	13-140
Transmission PTO linkage maintenance:		
Assembly	13-61d	13-136
Cleaning and inspection	13-61c	13-136
Disassembly	13-61b	13-135
Installation	13-61e	13-136
Removal	13-61a	13-134
Troop seat and side rack kit replacement:		
Side rack installation	14-47c	14-88
Side rack removal	14-47b	14-88
Troop seat installation	14-47d	14-89
Troop seat removal	14-47a	14-88
Troop seat maintenance, cargo side rack and:		
Cargo rack assembly	12-2f	12-4
Cargo rack disassembly	12-2b	12-2
Inspection	12-2d	12-2
Troop seat assembly	12-2e	12-4
Troop seat disassembly	12-2c	12-2
Troop seat installation	12-2g	12-4
Troop seat removal	12-2a	12-2
Troop seat mounting kit and seatbelts maintenance index	14-44	14-84
Troubleshooting, compressed air and air-hydraulic brake system:		
Compressed air and air-hydraulic brake system troubleshooting symptoms (table 2-3)		2-90
General	2-13	2-88
Symptom index, compressed air and air-hydraulic brake system.		2-89
Troubleshooting, electrical systems:		
Central	2-14	2-96
Symptom index, electrical troubleshooting		2-97
Test equipment	2-15	2-97
Troubleshooting, mechanical systems:		
General	2-12	2-66
Mechanical troubleshooting (table 2-2)		2-70
Symptom index, mechanical systems troubleshooting		2-67

INDEX (Contd)

	Para	Page
Troubleshooting (simplified test equipment for internal &rnbustion engines), STE/ICE:		
General	2-16	2-186
STE/ICE chain index..	2-17	2-186
STE/ICE description and operation	2-20	2-186
STE/ICE tests and setup procedures	2-19	2-186
Vehicle testing	2-21	2-194
Vehicle test meter (VTM) troubleshooting..	2-18	2-186
Tube rerdacement. front sump:		
Installation	3-9b	3-13
Removal	3-9a	3-13
Tubes replacement, fuel supply and return:		
Installation	3-23b	3-38
Removal	3-23a	3-36
Tunnels replacement, cab:		
Rear tunnel installation	11-30e	11-56
Rear tunnel removal	11-30b	11-56
Toeboard installation	11-30d	11-56
Toeboard removal	11-30c	11-56
Tunnel installation	11-30f	11-56
Tunnel removal	11-30a	11-56
Turn signal control and indicator lamp replacement:		
Installation	4-33b	4-61
Removal	4-33a	4-61
Turn signal flasher replacement:		
Installation	4-32b	4-60
Removal	4-32a	4-60
Turn signal light replacement, intermediate:		
Installation	14-38b	14-72
Removal	14-38a	14-72

U

	Para	Page
Under cab toolbox replacement:		
Installation	11-29b	11-54
Removal	11-29a	11-54
Universal joint maintenance, front axle shaft and:		
Cleaning and inspection	7-10b	7-20
Installation	7-10c	7-20
Removal	7-10a	7-10
Universal joint maintenance:		
Assembly	7-5c	7-10
Cleaning and inspection	7-5b	7-10
Disassembly	7-5a	7-8
Upper and lower splash guard replacement:		
Lower splash guard installation	12-5d	12-10
Lower splash guard removal	12-5a	12-10
Upper splash guard installation	12-5c	12-10
Upper splash guard removal	12-5b	12-10

V

	Para	Page
Valve replacement, doublecheck:		
Installation	8-21b	8-41
Removal	8-21a	8-40
Valve and mounting bracket maintenance, selector		
Inspection	3-22b	3-34
Installation	3-22c	3-34
Removal	3-22a	3-34
Van body lifting brackets replacement:		
Installation	12-30b	12-58
Removal	12-30a	12-58
Van body maintenance index.	12-18	12-34
Van cable reel main support replacement:		
Installation	14-62b	14-118
Removal	14-62a	14-118
Van cable reel maintenance:		
Assembly	14-61c	14-116
Disassembly	14-61b	14-116
Installation	14-61d	14-116
Removal	14-61a	14-116
Van heaterandexhaust replacement:		
Installation	12-37b	12-78
Removal	12-37a	12-76
Van liftgate control linkage maintenance:		
Assembly	13-51d	13-118
Disassembly	13-51b	13-118
Inspection	13-51c	13-118
Installation	13-51e	13-118
Removal	13-51a	13-118
Van liftgate control valve replacement:		
Installation	13-52b	13-120
Removal	13-52a	13-120

INDEX (Contd)

	Para	Page
Van liftgate controls maintenance		
Assembly	13-47d	13-110
Disassembly	13-47b	13-110
Inspection	13-47c	13-110
Installation	13-47e	13-110
Removal	13-47a	13-110
Van liftgate oil tank replacement		
Installation	13-49b	13-114
Removal	13-49a	13-114
Van liftgate pump motor replacement		
Installation	13-50b	13-116
Removal	13-50a	13-116
Van liftgate pump propeller shaft replacement		
Installation	13-53b	13-122
Removal	13-53a	13-122
Van liftgate safety latch replacement		
Installation	13-48b	13-112
Removal	13-48a	13-112
Van pioneer tool kit bracket replacement		
Installation	12-47b	12-100
Removal	12-47a	12-100
Van telephone jack replacement		
Installation	12-32b	12-66
Removal	12-32a	12-66
Vehicle performance data	1-15	1-33
Vehicle testing	2-21	2-150
Vehicle test meter (VTM) troubleshooting	2-18	2-186
Vehicle tiedown loop replacement		
Installation	10-2b	10-2
Removal	10-2a	10-2
Vertical exhaust pipe replacement		
Installation	3-40b	3-75
Removal	3-40a	3-74
Vise and mounting bracket replacement		
Installation	12-53b	12-110
Removal	12-53a	12-110

W

	Para	Page
Warning, caution, and data plates, location and contents of	1-13	1-14
Warning light wiring replacement		
Installation	4-55b	4-118
Removal	4-54a	4-118
Warning signal lamp, housing, and bracket replacement:		
Signal lamp installation	4-39d	4-71
Signal lamp removal	4-39a	4-70
Signal light housing installation	4-39c	4-70
Signal light housing removal	4-39b	4-70
Warning signal light flasher replacement		
Installation	4-34b	4-62
Removal	4-34a	4-62
Warranty in formation	1-7	1-2
Washer jet, tubing, and pump replacement, windshield:		
Jet installation	11-39f	11-71
Jet removal	11-39a	11-70
Pump installation	11-39d	11-70
Pump removal	11-39c	11-70
Tubing installation	11-39e	11-70
Tubing remova l	11-39b	11-70
Washer reservoir replacement, windshield:		
Installation	11-41b	11-74
Removal	11-41a	11-74
Water pump drivebelt maintenance:		
Adjustment	3-54d	3-102
Inspection	3-54b	3-102
Installation	3-54c	3-102
Removal	3-54a	3-102
Water pump replacement:		
Installation	3-55b	3-104
Removal	3-55a	3-104
Water separator maintenance/ fuel filter		
Cleaning and inspection	3-26d	3-50
Filter element installation	3-26f	3-50
Filter element removal	3-26b	3-48
Filter head installation	3-26e	3-50
Filter head removal	3-26c	3-48
Fuel drainage	3-26a	3-48
Water temperature sending unit replacement:		
Installation	4-28b	4-54
Removal	4-28a	4-54

INDEX (Contd)

	Para	Page
Weatherseals replacement, cab door:		
Head weatherseal installation	11-20e	11-40
Head weatherseal removal	11-20b	11-40
Pillar post weatherseals installation	11-20d	11-40
Pillar post weatherseals removal	11-20c	11-40
Weatherseals installation	11-20f	11-40
Weatherseals removal	11-20a	11-40
Wheel bearing adjustment	9-6	9-20
Wheel cylinder replacement, hydraulic:		
Installation	8-10b	8-18
Removal	8-10a	8-18
Wheel replacement (M815), fifth:		
Installation	10-12b	10-18
Removal	10-12a	10-18
Wheel replacement (M818), fifth:		
Installation	10-13b	10-20
Removal	10-13a	10-20
Wheel replacement (M819), fifth:		
Installation	10-14b	10-22
Removal	10-14a	10-22
Wheel replacement, steering:		
Installation	9-13b	9-34
Removal	9-13a	9-34
Wheel, tire, and tube maintenance:		
Inspection	9-3c	9-8
l'irean dtubeinstallation	9-3d	9-9
Tire and tube removal	9-3b	9-7
Wheel installation	9-3e	9-10
Wheel removal	9-3a	9-6
Wheels, hubs, and drums, rnaintenance index	9-1	9-1
Winch cable, chain, and hook maintenance:		
Cleaning and inspection	13-5b	13-12
Installation	13-5c	13-12
Removal	13-5a	13-10
Winch maintenance (M821), hand:		
Cleaning and inspection	13-6b	13-14
Installation	13-6c	13-14
Removal	13-6a	13-14
Winch cable replacement (M816, M819), hoist:		
Installation	13-42b	13-96
Removal	13-42a	13-96
Winch frame extension replacement, front:		
Installation	13-7b	13-16
Removal	13-7a	13-16
Winch replacement, front:		
Installation	13-8b	13-20
Removal	13-8a	13-18
Winch replacement, rear		
Installation	13-15b	13-38
Removal	13-15a	13-36
Winch trolley replacement, front:		
Installation	13-10b	13-24
Removal	13-10a	13-24
Window blackout panel replacement:		
Installation	12-20b	12-36
Removal	12-20a	12-36
Windowbrushguard replacement:		
Installation	12-19b	12-35
Removal	12-19a	12-35
Window regulator and handle replacement, cab door:		
Window regulator handle installation	11-18d	11-36
Window regulator handle removal	11-18a	11-36
Window regulator installation	11-18c	11-36
Window regulator removal	11-18b	11-36
Window replacement, retractable:		
Installation	12-22b	12-40
Removal	12-22a	12-40
Windshield arm, glass, and handle replacement:		
Arm installation	11-27f	11-51
Arm removal	11-27a	11-50
Glass installation	11-27e	11-50
Glass removal	11-27b	11-50
Handle installation	11-27d	11-50
Handle removal	11-27c	11-50
Windshield replacement:		
Installation	11-28b	11-52
Removal	11-28a	11-52
Windshield washer jet, tubing, and pump replacement:		
Jet installation	11-39f	11-71
Jet removal	11-39a	11-70
Pump installation	11-39d	11-70
Pump removal	11-39c	11-70
Tubing installation	11-39e	11-70
Tubing remova l	11-39b	11-70
Windshield washer reservoir replacement:		
Installation	11-41b	11-74
Removal	11-41a	11-74

INDEX (Contd)

	Para	Page
Windshield wiper blade, arm, and motor replacement:		
Installation	11-37b	11-68
Removal	11-37a	11-68
Windshield wiper motor air tubes replacement		
Installation	11-40b	11-72
Removal	11-40a	11-72
Winterization kits maintenance index	14-1	14-1
Wiper blade, arm, and motor replacement, gondola windshield:		
Installation	11-42b	11-75
Removal	11-42a	11-75
Wiper blade, arm, and motor replacement, windshield:		
Installation	11-37b	11-68
Removal	11-37a	11-68
Wiper motor air tubes replacement, windshield:		
Installation	11-40b	11-72
Removal	11-40a	11-72
Wiring circuits and harnesses maintenance index	4-51	4-106
Wiring harness repair		
Plug assembly repair	4-52d	4-108
Plug end cable connector repair	4-52b	4-107
Receptacle assembly repair	4-52e	4-109
Receptacle cable connector (with sleeve) repair	4-52c	4-108
Terminal-type cable connector repair	4-52a	4-107
Wiring harness replacement, floodlight:		
Installatio n	4-53b	4-113
Removal	4-53a	4-110
Wiring replacement, microbrake lock		
Installation	4-54b	4-116
Removal	4-54a	4-116
Wiring replacement, warning light		
Installation	4-55b	4-118
Removal	4-55a	4-118
Wrecker body maintenance index	12-48	12-101
Wrecker body step replacement		
Installation	12-58b	12-115
Removal	12-58a	12-115
Wrecker boom support replacement (M816, M819):		
Installation	13-38b	13-88
Removal	13-38a	13-88
Wrecker control valve hydraulic hoses replacement:		
Installation	13-34b	13-82
Removal	13-34a	13-82
Wrecker control valve replacement		
Installation	13-33b	13-80
Removal	13-33a	13-80
Wrecker hoist winch block replacement (M816, M819):		
Direct block installation	13-39b	13-90
Direct block removal	13-39a	13-90
Pulley block installation	13-39d	13-90
Pulley block removal	13-39c	13-90
Wrecker hydraulic oil filter element replacement:		
Installation	13-30b	13-74
Removal	13-30a	13-74
Wrecker hydraulic oil reservoir replacement		
Installation	13-31b	13-76
Removal	13-31a	13-76
Wrecker hydraulic pressure test and adjustment:		
Adjustment	13-35b	13-84
Testing	13-35a	13-84
Wrecker inner boom roller adjustment	13-37	13-87
Wrecker lift cylinder packing adjustment	13-36	13-86
Wrecker pioneer tool kit bracket replacement:		
Installation	12-55b	12-112
Removal	12-55a	12-112
Wrecker rear winch cable roller replacement:		
Installation	13-21b	13-50
Removal	13-21a	13-50
Wrecker restrictor valve replacement		
Installation	13-32b	13-78
Removal	13-32a	13-78
Wrecker throttle control cable maintenance:		
Adjustment	13-41c	13-94
Installation	13-41b	13-94
Removal	13-41a	13-94
Wrecker throttle control lever replacement		
Installation	13-40b	13-92
Removal	13-40a	13-92

INDEX (Contd)

	Para	Page
Y		
Yoke and seal replacement, power divider		
Installation	13-59b	13-132
Removal	13-59a	13-132

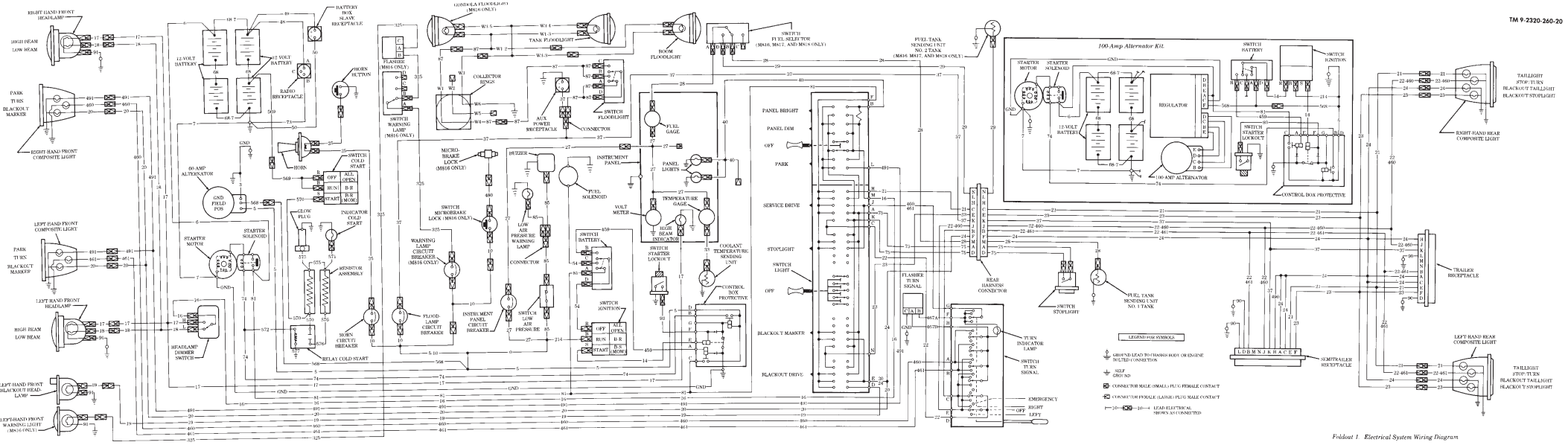

Foldout 1. Electrical System Wiring Diagram

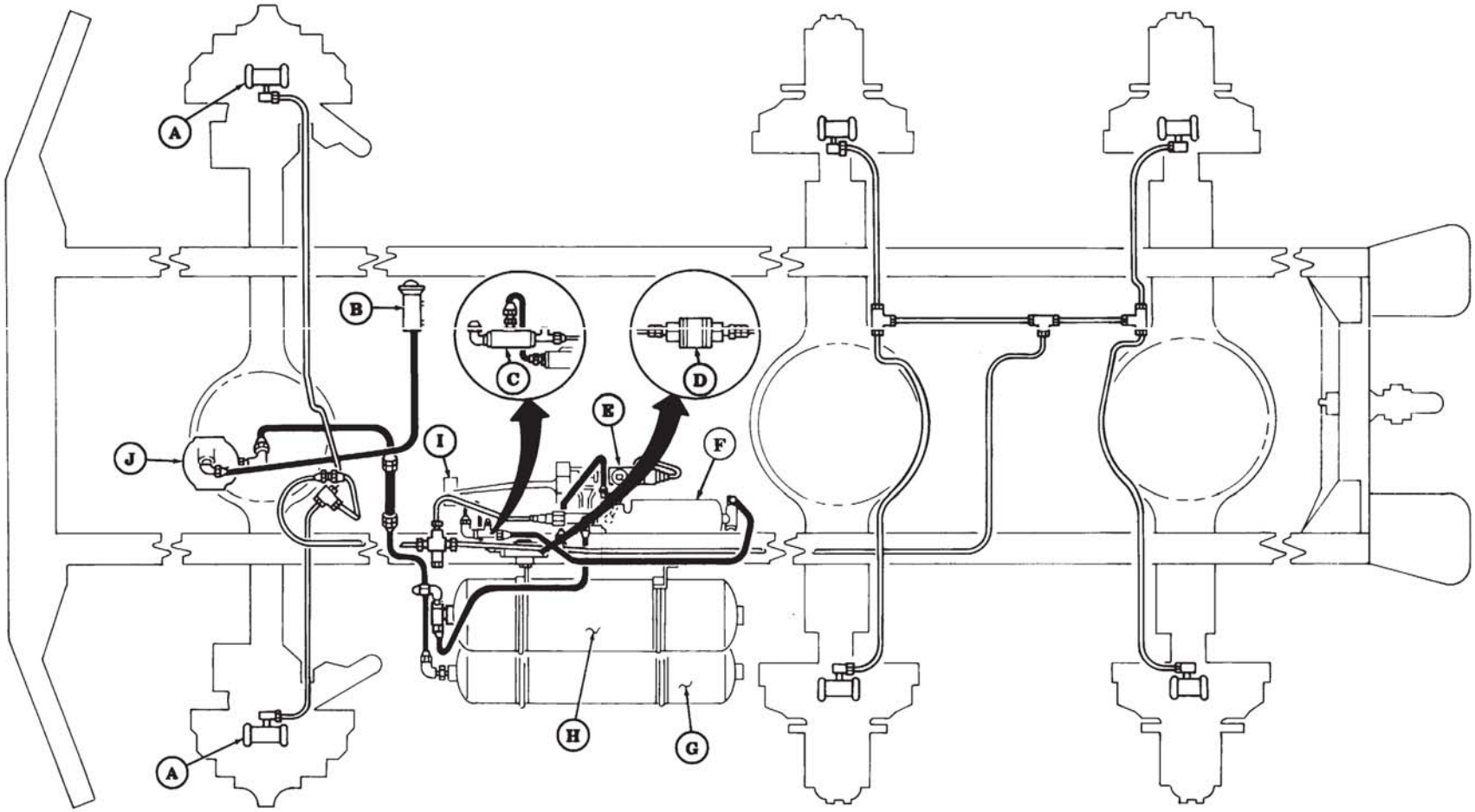

(A) WHEEL CYLINDER (6)

(B) GOVERNOR

(C) CHECK VALVE (M818, M819)

(D) ADAPTER (M816, M818, M819)

(E) MASTER CYLINDER

(F) AIR-HYDRAULIC CYLINDER

(G) AIR RESERVOIR TANK

(H) AIR PAK TANK

(I) BRAKE PEDAL (TREADLE VALVE)

(J) AIR COMPRESSOR

Foldout 2. Air-Hydraulic Brake System Diagram

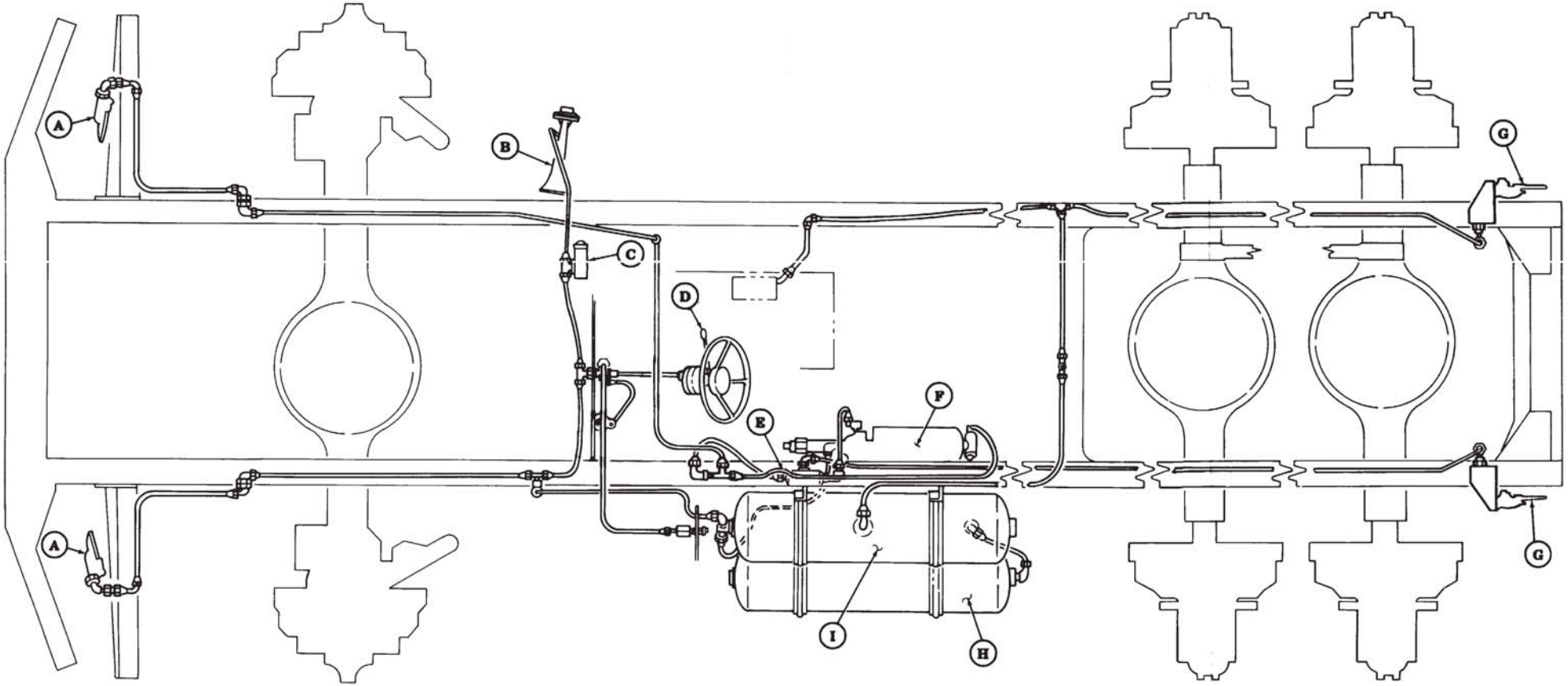

(A) FRONT SERVICE AIR COUPLING
(B) HORN
(C) GOVERNOR
(D) AIRBRAKE HANDLE
(E) CHECK VALVE
(F) AIR-HYDRAULIC CYLINDER
(G) REAR SERVICE AIR COUPLING
(H) AIR RESERVOIR TANK
(I) AIR PAK TANK

Foldout 3. Air Accessory System Diagram (all except M818, M819)

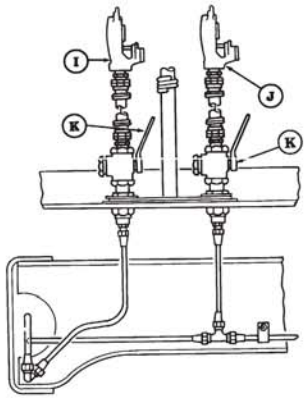

TRAILER AIR VALVES (M818)

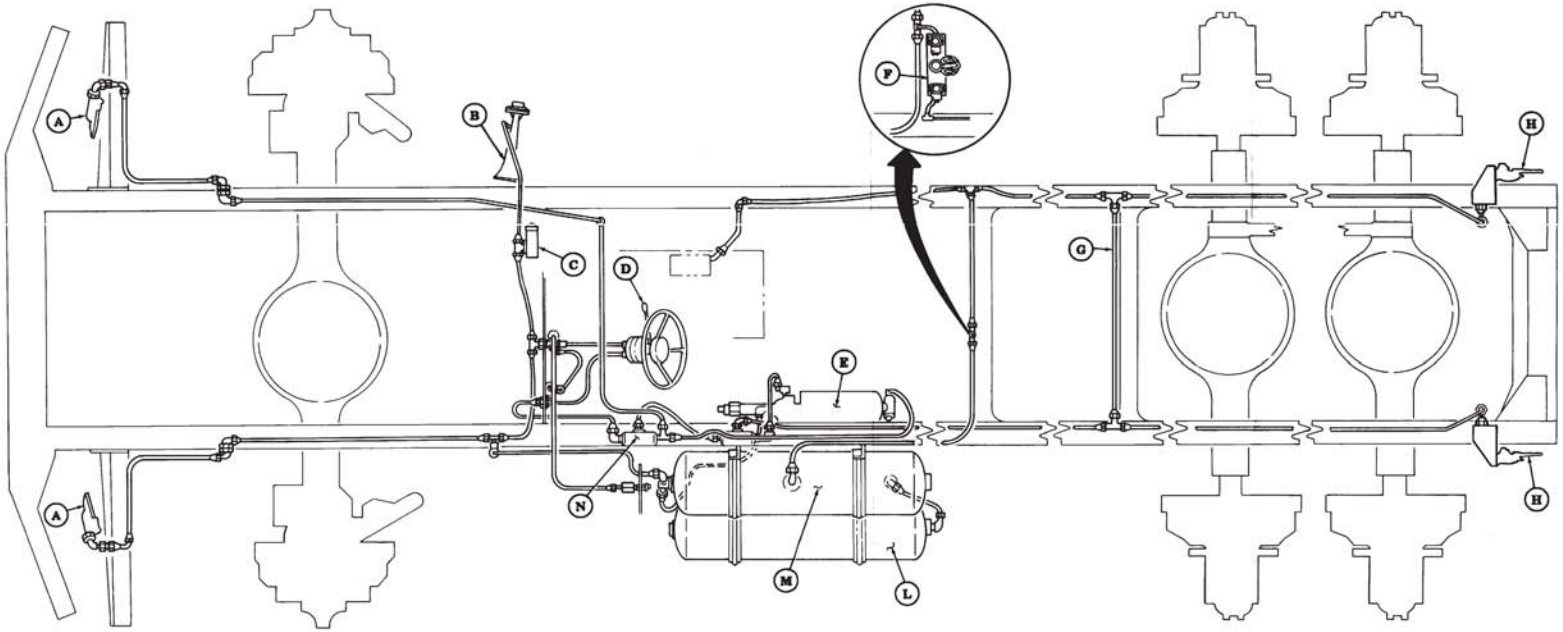

(A) FRONT SERVICE AIR COUPLING
(B) HORN
(C) GOVERNOR
(D) AIRBRAKE HANDLE
(E) AIR-HYDRAULIC CYLINDER
(F) TRAILER AIR VALVES (M818)
(G) AIR LINE (M819)
(H) REAR SERVICE AIR COUPLING
(I) EMERGENCY AIR COUPLING
(J) SERVICE AIR COUPLING
(K) CUTOFF VALVE
(L) AIR RESERVOIR TANK
(M) AIR PAK TANK
(N) CHECK VALVE

Foldout 4. Air Accessory System and Semitrailer Brake System Diagram (M818, M819)

* U.S. GOVERNMENT PRINTING OFFICE: 1995 646-018/20056

By Order of the Secretary of the Army

DENNIS J. REIMER
General United States Army
Chief of Staff

Official:

JOEL B. HUDSON
Acting Administrative Assistant to the
Secretary of the Army
00130

Distribution: **To be distributed in accordance with DA Form 12-38-E, block 1002, requirements for TM 9-2320-260-20.**

RECOMMENDED CHANGES TO EQUIPMENT TECHNICAL PUBLICATIONS

SOMETHING WRONG WITH THIS PUBLICATION?

THEN. . .JOT DOWN THE DOPE ABOUT IT ON THIS FORM. CAREFULLY TEAR IT OUT. FOLD IT AND DROP IT IN THE MAIL!

FROM: (PRINT YOUR UNIT'S COMPLETE ADDRESS)
293RD SIGNAL CO, 36TH SIGNAL BN
APO SF 96218

DATE SENT 23 JAN 95

PUBLICATION NUMBER	PUBLICATION DATE	PUBLICATION TITLE
TM9-2320-260-20	8 DEC 94	Technical manual unit maintenance 5-ton, 6X6 809 Series Trucks

BE EXACT . .PIN-POINT WHERE IT IS

PAGE NO.	PARA-GRAPH	FIGURE NO.	TABLE NO.
9-28	9-10		

IN THIS SPACE TELL WHAT IS WRONG AND WHAT SHOULD BE DONE ABOUT IT:

Sub task d, step 1, should read wrap male threads of elbows (15) and (20).

SAMPLE

PRINTED NAME, GRADE OR TITLE, AND TELEPHONE NUMBERS
CPT FREDERICK W. BRENT
COMMANDER DSN 267-7093

SIGN HERE:

DA FORM 1 JUL 79 2028-2

PREVIOUS EDITIONS ARE OBSOLETE.

P.S.—IF YOUR OUTFIT WANTS TO KNOW ABOUT YOUR RECOMMENDATION MAKE A CARBON COPY OF THIS AND GIVE IT TO YOUR HEADQUARTERS.

REVERSE OF DA FORM 2028-2

SAMPLE

FILL IN YOUR UNIT'S ADDRESS

FOLD BACK

TEAR ALONG PERFORATED LINE

DEPARTMENT OF THE ARMY

CDR, 293RD SIGNAL CO

APO SF 96218

COMMANDER
U.S. ARMY TANK-AUTOMOTIVE AND ARMAMENTS COMMAND
ATTN: AMSTA-IM-MMAA
WARREN, MI 48397-5000

RECOMMENDED CHANGES TO EQUIPMENT TECHNICAL PUBLICATIONS

THEN. . .JOT DOWN THE DOPE ABOUT IT ON THIS FORM. CAREFULLY TEAR IT OUT. FOLD IT AND DROP IT IN THE MAIL!

SOMETHING WRONG WITH THIS PUBLICATION?

FROM: (PRINT YOUR UNIT'S COMPLETE ADDRESS)

DATE SENT

PUBLICATION NUMBER	PUBLICATION DATE	PUBLICATION TITLE
TM 9-2320-260-20		UNIT MAINTENANCE 5-TON , 6X6, M809 SERIES

BE EXACT . .PIN-POINT WHERE IT IS

PAGE NO.	PARA-GRAPH	FIGURE NO.	TABLE NO.

IN THIS SPACE TELL WHAT IS WRONG AND WHAT SHOULD BE DONE ABOUT IT:

PRINTED NAME, GRADE OR TITLE, AND TELEPHONE NUMBERS

SIGN HERE:

DA FORM 1 JUL 79 2028-2

PREVIOUS EDITIONS ARE OBSOLETE.

P.S.—IF YOUR OUTFIT WANTS TO KNOW ABOUT YOUR RECOMMENDATION MAKE A CARBON COPY OF THIS AND GIVE IT TO YOUR HEADQUARTERS.

REVERSE OF DA FORM 2028-2

FILL IN YOUR UNIT'S ADDRESS

FOLD BACK

DEPARTMENT OF THE ARMY

TEAR ALONG PERFORATED LINE

COMMANDER
U.S. ARMY TANK-AUTOMOTIVE AND ARMAMENTS COMMAND
ATTN: AMSTA-IM-MMAA
WARREN, MI 48397-5000

THE METRIC SYSTEM AND EQUIVALENTS

LINEAR MEASURE

1 Centimeter = 10 Millimeters = 0.01 Meters = 0.3937 Inches
1 Meter = 100 Centimeters = 1000 Millimeters = 39.37 Inches
1 Kilometer = 1000 Meters = 0.621 Miles

WEIGHTS

1 Gram = 0.001 Kilograms = 1000 Milligrams = 0.035 Ounces
1 Kilogram = 1000 Grams = 2.2 lb.
1 Metric Ton = 1000 Kilograms = 1 Megagram = 1.1 Short Tons

LIQUID MEASURE

1 Milliliter = 0.001 Liters = 0.0338 Fluid Ounces
1 Liter = 1000 Milliliters = 33.82 Fluid Ounces

SQUARE MEASURE

1 Sq. Centimeter = 100 Sq. Millimeters = 0.155 Sq. Inches
1 Sq. Meter = 10,000 Sq. Centimeters = 10.76 Sq. Feet
1 Sq. Kilometer = 1,000,000 Sq. Meters = 0.386 Sq. Miles

CUBIC MEASURE

1 Cu. Centimeter = 1000 Cu. Millimeters = 0.06 Cu. Inches
1 Cu. Meter = 1,000,000 Cu. Centimeters = 35.31 Cu. Feet

TEMPERATURE

5/9(°F - 32) = °C
212° Fahrenheit is evuivalent to 100° Celsius
90° Fahrenheit is equivalent to 32.2° Celsius
32° Fahrenheit is equivalent to 0° Celsius
9/5C° + 32 =°F

APPROXIMATE CONVERSION FACTORS

TO CHANGE	TO	MULTIPLY BY
Inches	Centimeters	2.540
Feet	Meters	0.305
Yards	Meters	0.914
Miles	Kilometers	1.609
Square Inches	Square Centimeters	6.451
Square Feet	Square Meters	0.093
Square Yards	Square Meters	0.836
Square Miles	Square Kilometers	2.590
Acres	Square Hectometers	0.405
Cubic Feet	Cubic Meters	0.028
Cubic Yards	Cubic Meters	0.765
Fluid Ounces	Milliliters	29.573
Pints	Liters	0.473
Quarts	Liters	0.946
Gallons	Liters	3.785
Ounces	Grams	28.349
Pounds	Kilograms	0.454
Short Tons	Metric Tons	0.907
Pound-Feet	Newton-Meters	1.356
Pounds per Square Inch	Kilopascals	6.895
Miles per Gallon	Kilometers per Liter	0.425
Miles per Hour	Kilometers per Hour	1.609

TO CHANGE	TO	MULTIPLY BY
Centimeters	Inches	0.394
Meters	Feet	3.280
Meters	Yards	1.094
Kilometers	Miles	0.621
Square Centimeters	Square Inches	0.155
Square Meters	Square Feet	10.764
Square Meters	Square Yards	1.196
Square Kilometers	Square Miles	0.386
Square Hectometers	Acres	2.471
Cubic Meters	Cubic Feet	35.315
Cubic Meters	Cubic Yards	1.308
Milliliters	Fluid Ounces	0.034
Liters	Pints	2.113
Liters	Quarts	1.057
Liters	Gallons	0.264
Grams	Ounces	0.035
Kilograms	Pounds	2.205
Metric Tons	Short Tons	1.102
Newton-Meters	Pounds-Feet	0.738
Kilopascals	Pounds per Square Inch	0.145
Kilometers per Liter	Miles per Gallon	2.354
Kilometers per Hour	Miles per Hour	0.621

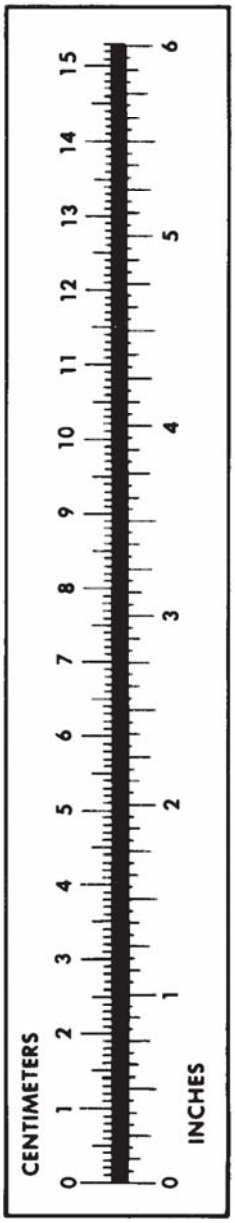

This fine document...

Was brought to you by me:

Liberated Manuals -- free army and government manuals

Why do I do it? I am tired of sleazy CD-ROM sellers, who take publicly available information, slap “watermarks” and other junk on it, and sell it. Those masters of search engine manipulation make sure that their sites that sell free information, come up first in search engines. They did not create it... They did not even scan it... Why should they get your money? Why are not letting you give those free manuals to your friends?

I am setting this document FREE. This document was made by the US Government and is NOT protected by Copyright. Feel free to share, republish, sell and so on.

I am not asking you for donations, fees or handouts. If you can, please provide a link to liberatedmanuals.com, so that free manuals come up first in search engines:

<A HREF=http://www.liberatedmanuals.com/>Free Military and Government Manuals</A>

- Sincerely
  Igor Chudov
  http://igor.chudov.com/